SOLICITATION, OFFER, AND AWARD (Construction, Alteration, or Repair)	1. SOLICITATION NUMBER	2. TYPE OF SOLICITATION	3. DATE ISSUED	PAGE OF PAGES
	DACA67-99-B-0020	[X] SEALED BID (IFB) [ ] NEGOTIATED (RFP)	5 Feb 1999	1

IMPORTANT - The "offer" section on the reverse must be fully completed by the offeror.

4. CONTRACT NUMBER	5. REQUISITION/PURCHASE REQUEST NUMBER	6. PROJECT NUMBER
DACA67-99-C-0025	W68MD9-8349-2262	PN: 043855

7. ISSUED BY — CODE W68MD9

Seattle District, Corps of Engineers
ATTN: CENWS-CT-CB
PO BOX 3755
Seattle, WA 98124-3755

8. ADDRESS OFFER TO

Seattle District, Corps of Engineers
PO BOX 3755 ATTN: CENWS-CT-CB
Seattle, WA 98124-3755

HAND CARRY: Preston Conference Room
4735 East Marginal Way South
Seattle, WA 98134-2385
BID OPENING ROOM: Preston Conference Room

9. FOR INFORMATION CALL	A. NAME	B. TELEPHONE NUMBER (Include area code) (NO COLLECT CALLS)
	See Information Page inside Front Cover	See Information Page inside Front Cover

SOLICITATION

NOTE: In sealed bid solicitations "offer" and "offeror" mean "bid" and "bidder".

10. THE GOVERNMENT REQUIRES PERFORMANCE OF THE WORK DESCRIBED IN THESE DOCUMENTS (Title, identifying number, date):

Furnish all labor, materials and equipment and perform all work for, Close Combat Tactical Trainer, Fort Lewis, Washington, in accordance with the attached Contract Clauses, Special Clauses, Technical Specifications and Drawings.

1. Solicitation No. DACA67-99-B-0020 dated 5 Feb 99 with 2 amendments thereto.

2. Wage Determination No. 980002 with -0- modifications thereto.

Drawings as listed in Section 00800.

NOTE: Award will be made pursuant to the Small Business Competitive Demonstration Program.

11. The Contractor shall begin performance within 10 calendar days and complete it within 450 calendar days after receiving [ ] award, [X] notice to proceed. This performance period is [X] mandatory, [ ] negotiable. (See Paragraph SC-1

12A. THE CONTRACTOR MUST FURNISH ANY REQUIRED PERFORMANCE PAYMENT BONDS? (If "YES," indicate within how many calendar days after award in Item 12B.) [X] YES [ ] NO

12B. CALENDAR DAYS: 10

13. ADDITIONAL SOLICITATION REQUIREMENTS:

A. Sealed offers in original and 0 copies to perform the work required are due at the place specified in Item 8 by 1:00 p.m. (hour) local time 16 MARCH 1999 (date). If this is a sealed bid solicitation, offers will be publicly opened at that time. Sealed envelopes containing offers shall be marked to show the offeror's name and address, the solicitation number, and the date and time offers are due.

B. An offer guarantee [X] is, [ ] is not required.

C. All offers are subject to the (1) work requirements, and (2) other provisions and clauses incorporated in the solicitation in full text or by reference.

D. Offers providing less than 90 calendar days for Government acceptance after the date offers are due will not be considered and will be rejected.

NSN 7540-01-155-3212 — 1442-102 — STANDARD FORM 1442 (REV. 4-85)
Designed using Perform Pro, WHS/DIOR, Oct 88 — Prescribed by GSA, FAR (48 CFR) 53.236

R001

SOLICITATION No. DACA67-99-B-0020 | OFFER (Must be fully completed by offeror) DACA67-99-C-0025

14. NAME AND ADDRESS OF OFFEROR (Include ZIP Code)

Pease Construction, Inc.
PO Box 98046
Lakewood, WA 98498

Tax ID No: 91-1180033 DUNS No: 06-957-1479
Email: info@peaseinc.com

CODE FACILITY CODE

15. TELEPHONE NUMBER (Include area code)
(253) 584-6606 | FAX#: (253 581-7855

16. REMITTANCE ADDRESS (Include only if different than Item 14)

17. The offeror agrees to perform the work required at the prices specified below in strict accordance with the terms of this solicitation, if this offer is accepted by the Government in writing within _____ calendar days after the date offers are due. (Insert any number equal or greater than the minimum requirement stated in 13D. Failure to insert any number means the offeror accepts the minimum in Item 13D.)

AMOUNTS ▶ See Page 00010-4

18. The offeror agrees to furnish any required performance and payment bonds.

19. ACKNOWLEDGEMENT OF AMENDMENTS
(The offeror acknowledges receipt of amendments to the solicitation - give number and date of each)

AMENDMENT NO.	0001	0002								
DATE	3/2/99	3/9/99								

20A. NAME AND TITLE OF PERSON AUTHORIZED TO SIGN OFFER (Type or print)
Patricia A. Candiotta, President

20B. SIGNATURE

20C. OFFER DATE
3/16/99

AWARD (To be completed by Government)

21. ITEMS ACCEPTED

0001, 0002 0003 and 0004

22. AMOUNT
$6,580,047

23. ACCOUNTING AND APPROPRIATION DATA
SEE ALTERATIONS PAGE (00010-2(a))

24. SUBMIT INVOICES TO ADDRESS SHOWN IN (4 copies unless otherwise specified) ▶ ITEM 26

25. OTHER THAN FULL AND OPEN COMPETITION PURSUANT TO
☐ 10 U.S.C. 2304(c) ( ) ☐ 41 U.S.C. 253(c) ( )

26. ADMINISTERED BY CODE
Fort Lewis Area Office
USAED, Seattle
PO BOX 92146
Tillicum, WA 98492-0146

27. PAYMENT WILL BE MADE BY
US Army Corps of Engineers Finance Center
CEFC-AO-P
5720 Integrity Drive
Millington, TN 38054-5005

CONTRACTING OFFICER WILL COMPLETE ITEM 28 OR 29 AS APPLICABLE

☐ 28. NEGOTIATED AGREEMENT (Contractor is required to sign this document and return copies to the issuing office.) Contractor agrees to furnish and deliver all items or perform all work requirements identified on this form and any continuation sheets for the consideration stated in this contract. The rights and obligations of the parties to this contract shall be governed by (a) this contract award, (b) the solicitation, and (c) the clauses, representations, certifications, and specifications incorporated by reference in or attached to this contract.

☐ 29. AWARD. (Contractor is not required to sign this document.) Your offer on this solicitation is hereby accepted as to the items listed. This award consummates the contract, which consists of (a) the Government solicitation and your offer, and (b) this contract award. No further contractual document is necessary.

Cheryl A. Anderson, ContractingOfficer

30A. NAME AND TITLE OF CONTRACTOR OR PERSON AUTHORIZED TO SIGN (Type or print)

31A. NAME OF CONTRACTING OFFICER (Type or print)

30B. SIGNATURE

30C. DATE

31B. UNITED STATES OF AMERICA
BY Cheryl A Anderson

31C. AWARD DATE
26 Mar 99

STANDARD FORM 1442 BACK (REV. 4-85)

ALTERATIONS IN CONTRACT
(FAR 52.252-4) (APR 1984)

PORTIONS OF CONTRACT ARE ALTERED AS FOLLOWS:

Section 00100, pages 00100-5 through 00100-12, Subcontracting Plan, dated 22 March 1999, is hereby incorporated.

Section 00800, pages 00800-24 through 00800-27 have been revised to include a complete listing of those revisions resulting from the Modifications to Contract Drawings Index changes incorporated in telegraphic Amendment Number 0002, dated 9 March 1999. Additional pages included in Section 00800 are due to reformatting.

ACCOUNTING AND APPROPRIATION DATA (SF1442, Block 23-continued)

Bid Item	Fund Cite	Total Amount
0001	21920500000 088082 32000028WM10438550000 TCAT 35026	$ 4,935,919
0002	21920500000 088082 32000028WM10438550000 TCAT 35026	$ 1,369,431
0003	21920350000 6S6S01 3200002B1J53706542171 NA 11071	$ 266,000
0004	21920500000 088082 3200002G9J70000000000 E316 35026	$ 8,697
	GRAND TOTAL	**$ 6,580,047**

This page intentionally blank

IFB No: DACA67-99-B-0020

Contract No.:_____

IF THE CONTRACTOR IS A CORPORATION OR PARTNERSHIP, THE APPLICABLE FORM LISTED BELOW MUST BE COMPLETED. IN THE ALTERNATIVE, OTHER EVIDENCE MUST BE SUBMITTED TO SUBSTANTIATE THE AUTHORITY OF THE PERSON SIGNING THE CONTRACT. IF A CORPORATION, THE SAME OFFICER SHALL NOT EXECUTE BOTH THE CONTRACT AND THE CERTIFICATE.

CORPORATE CERTIFICATE

I, Gloria I. Jermundson, certify that I am the _____ Secretary of the corporation named as Contractor herein; that Patricia A. Candiotta, who signed this contract on behalf of the Contractor was then President of said corporation; that said contract was duly signed for and on behalf of said corporation by authority of its governing body and is within the scope of its corporate powers.

Gloria I. Jermundson
Gloria I. Jermundson (CORPORATE
(Secretary) SEAL)

AUTHORITY TO BIND PARTNERSHIP

This is to certify that the names, signatures and Social Security Numbers of all partners are listed below and that the person signing the contract has authority actually to bind the partnership pursuant to its partnership agreements. Each of the partners individually has full authority to enter into and execute contractual instruments on behalf of said partnership with the United States of America, except as follows: (state "none" or describe limitations, if any).

This authority shall remain in full force and effect until such time as the revocation of authority by any cause whatsoever has been furnished in writing to, and acknowledged by, the Contracting Officer.

(Names, Signatures and Social Security Numbers of all Partners)

NAME	SIGNATURE	SOCIAL SECURITY NO.

This page intentionally blank

CLOSE COMBAT TACTICAL TRAINER (CCTT), FT. LEWIS, WA

PN 43855

SCHEDULE

Item No.	Description of Item	Quantity	Unit	Unit Price	Amount
	BASE ITEMS				
0001	All Work for Close Combat Tactical Trainer (CCTT), Except for Items 0002, 0003, and 0004	1	JOB	L.S.	$4935919
0002	All Work for Support Facilities that Includes All Work Beyond the 1.5 Meter Line around Building Footprint	1	JOB	L.S.	$1,369,431
	TOTAL BASE ITEMS				$6,305,350
	OPTIONAL ITEMS				
0003	All Work to Provide Power Conditioners	14	EA	$19,000	$266,000
0004	All Work to Provide Intrusion Detection System	1	JOB	L.S.	$8697
	TOTAL OPTIONAL ITEMS				$274,697
	TOTAL BASE AND OPTIONAL ITEMS				$6580047

This page intentionally blank

PEASE CONSTRUCTION, INC.
SMALL, SMALL DISADVANTAGED AND WOMEN-OWNED
SMALL BUSINESS SUBCONTRACTING PLAN

DATE: 3/22/99

CONTRACTOR: Pease Construction, Inc.

ADDRESS: PO Box 98046

PHONE NO: (253) 584-6606

PROJECT TITLE: Close Combat Tactical Trainer

SOLICITATION NO: DACA67-99-B-0020

1. In accordance with the contract clauses at 52.219-8 and 52.219-9, Pease Construction, Inc. submits the following Subcontracting Plan for Small, Small Disadvantaged, and Women-owned Business Concerns.

2. Corresponding dollar values for percentages cited in para. 3:

a. Total contract amount is $ 6,305,350

b. Total dollars planned to be subcontracted (to all types of businesses): $ 4,353,265

c. Total dollars planned to be subcontracted to small business concerns: $ 3,264,949

d. Total dollars planned to be subcontracted to small disadvantaged business concerns: $ 392,000

e. Total dollars planned to be subcontracted to small woman-owned business concerns: $ 218,000

3. The following percentage goals are applicable to the contract awarded under the solicitation cited above.

a. The total estimated percentage of all planned subcontracting to all types of business concerns under this contract is (2b divided by 2a): 70 %

b. Small Business Concerns (2c divided by 2b): 75 % of total planned subcontracting dollars under this contract will go to subcontractors who are small business concerns including 3c. and 3d.

c. Small Disadvantaged Business Concerns (2d divided by 2b): 9 % of total planned subcontracting dollars under this contract will go to subcontractors who are small disadvantaged individuals. **NOTE:** Women-owned businesses are not considered a small disadvantaged business. Do not include subcontract awards to women-owned businesses in your calculations for paragraph 3c unless the firm meets the definition of a small disadvantaged business.

d. Small Woman-Owned Business Concerns (2e divided by 2b): 5 % of total planned subcontracting dollars under this contract will go to subcontractors who are small woman-owned businesses.

4. The principal items or areas we will subcontract under this contract are:

Sitework, concrete flatwork, masonry, rebar, steel, roofing & sheet metal, building specialties, windows, EIFS, drywall, ACT, tile, flooring, painting, toilet accessories, window treatment, signage, mechanical and electrical

a. Of the items or areas stated in 4; the following are planned to be subcontracted to Small Businesses:

All of the above except partial electrical.

b. Of the items or areas stated in 4.a; the following are planned to be subcontracted to Small Disadvantaged Businesses:

03300, Concrete work (Tingg Concrete - $70,000); Surveying (Coates Surveying - $9,000)

Subcontracting Opportunities (Plaster, Glass & Glazing, Electrical work - $313,000)

c. Of the items or areas stated in 4.a; the following are planned to be subcontracted to Small Women-Owned Businesses:

Section 15330/15332 (Trinity Fire Protection - $90,800) Reinforcing Steel (Steel Systems $20,000); 10100/10430 (Multi-Graphics -$13,000), Final Cleaning (Homeaid ($5,000); Landscaping ($20,000); Trucking ($14,500) and other subcontracting opportunities ($54,700)

5. Description of the method being used to develop the subcontracting goals in paragraph 2: Pease Construction has only recently become a large business concern and may only qualify as such for the year. We have operated as a small women-owned business since our inception in 1984 and have obligated ourselves to providing other women-owned and disadvantaged businesses assistance through a *mentoring* program of our own. Through this program we specifically solicit bids from several small women-owned businesses and minority-owned businesses, most of which with we have developed on-going relationships. We continue providing necessary assistance to those subcontractors throughout the duration of the contract. This includes assistance in paperwork, working out special payment programs, etc. Our belief is that providing continuity throughout the contract process establishes stable subcontractors and therefore stronger members of our working team. This has proved to be mutually beneficial.

We additionally have added to our list of Small, Small Disadvantaged and Women Owned Businesses by using AGC, CMD, and Construction Data and News as resources. We establish contact by methods of both telephone solicitation and written invitations to bid. We also maintain folders with copies of the unsolicited sub bids for future contacts.

6. Indirect costs were ☐ were not ☒ used in establishing subcontracting goals. **If indirect costs are included in your goals, furnish a description of the method used to determine the proportionate share of indirect costs to be incurred with (i) small business concerns (ii) small disadvantaged business concerns and (iii) women-owned.**

7. The following individual will administer this Subcontracting Plan on behalf of Pease Construction, Inc.:

Name: Lori S. Wehmhoefer Job Title: Small Business Advocate

Address and Telephone Number: P.O. Box 98046, Lakewood, WA 98498 (253) 584-6606

This individual's specific duties with regard to the conduct of our firm's Subcontracting Plan will include, but will not be limited to, the following:

a. Developing and maintaining bidders lists of small, small disadvantaged and women-owned small business concerns using sources such as the Small Business Administration's ProNet, Washington State Office of Minority and Women-owned Business Enterprises, Minority Business Development Agency, US Department of Commerce, Local Minority Business Development Centers, Economic Development Centers, and National Center for American Indian Enterprise Development.

b. Assuring the inclusion of small, small disadvantaged, and women-owned small business concerns in all solicitations for products or services which they are capable of providing; and ensuring that all solicitations are structured to permit the maximum possible participation by small, small disadvantaged and women-owned small business concerns.

c. Establishing and maintaining records of all solicitations and subcontract awards to ensure that the members of the firm who review bidders proposals documents their reasons for selecting or not selecting a bid submitted by a small, small disadvantaged, or women-owned small business concern, and monitoring the firm's progress towards achievement of its percentage goals.

d. Preparing and submitting the Subcontracting Report for Individual Contracts (SF 294) and the Summary Subcontract Report (SF 295) in accordance with instructions provided, and coordinating and preparing for all compliance reviews by Federal agencies.

e. Conducting or arranging for all other activities necessary to further the intent and attainment of the goals in the Plan to include motivational training of the firm's purchasing personnel, attendance at workshops, seminars and trade fairs conducted by or on behalf of small business concerns; and general cooperation with members of the small, small disadvantaged and women-owned small business concerns or their representatives.

8. The following steps will be taken to ensure that small, small disadvantaged, and women-owned small business concerns receive notice of and have an equitable opportunity to compete for intended awards of subcontracts and/or purchase orders for the products and/or services described in paragraph 4 above:

a. Sources will be requested through SBA's ProNet system, business development organizations, minority and small business trade associations and at small, minority and women-owned small business procurement conferences; sources will be contacted; and bidding materials will be provided to all responding parties expressing an interest.

b. Internally, motivational training will be conducted to guide and encourage purchasing personnel; source lists and guides to small, small disadvantaged, and women-owned small business concerns will be maintained and utilized by purchasing personnel while soliciting subcontracts and purchase orders; activities will be monitored to ensure sufficient time is allowed for interested bidders to prepare their proposals and to evaluate continuing compliance with the Subcontracting Plan.

9. Pease Construction, Inc. agrees that the clause entitled "Utilization of Small, Small Disadvantaged and Women-Owned Business Concerns" will be included in all subcontracts that offer further subcontracting opportunities. All subcontractors, except small business concerns, who receive subcontracts in excess of $1,000,000 will be required to adopt a plan similar to this one. Such plans will be reviewed to assure that all minimum requirements of an acceptable subcontracting plan have been satisfied.

The acceptability of percentage goals shall be determined on a case-by-case basis depending on the supplies/services involved, the availability of potential small, small disadvantaged, and women-owned subcontractors, and prior experience. Once approved and implemented, plans will be monitored through the submission of periodic visits to subcontractors facilities to review applicable records and subcontracting program progress.

10. Pease Construction, Inc. agrees to submit such periodic reports and cooperate in any studies or surveys as may be required by the Contracting agency or Small Business

Administration in order to determine the extent of compliance by the offeror with the subcontracting plan and with the clause entitled "Utilization of Small, Small Disadvantaged and Women-Owned Small Business Concerns" contained in the contract.

11. Pease Construction, Inc. agrees to maintain at least the following types of records to document compliance with the Subcontracting Plan:

a. The names of all organizations, agencies, and associations contacted for small, small disadvantaged, and women-owned small business sources, along with records of attendance at conferences, seminars and trade fairs where additional sources were developed.

b. Source lists, guides, and other data identifying small, small disadvantaged, and women-owned small business subcontractors and vendors.

c. Records of all subcontract solicitations resulting in an award of more than $1,000,000, on a contract-by-contract basis, indicating (1) whether small business concerns were solicited, and if not, why not; (2) whether small disadvantaged business concerns were solicited, and if not, why not; (3) whether small women-owned business concerns were solicited, and if not, why not; and (4) reasons for the failure of solicited small, small disadvantaged or women-owned small business concerns to receive a subcontract award.

d. Records of all subcontract award data to include subcontractor's name and address, to be kept on a contract-by-contract basis.

e. Minutes of internal motivational and training meetings held for the guidance and encouragement of purchasing personnel, and records of all monitoring activities performed for compliance evaluation.

f. Copies of SF 294 and SF 295 showing date and place of filing and copies of all other reports of results of reviews conducted by the contracting agency or other interested agencies of the Federal government to monitor our compliance with this Subcontracting Plan.

12. Pease Construction, Inc. will submit an SF 295, Summary Subcontract Report, on Corps of Engineers projects only. The SF 295 shall be completed and distributed in accordance with the Corps of Engineers Supplemental Instructions. Pease Construction, Inc. will not report Corps of Engineers projects through any other agency unless authorized by the Contracting Officer.

13. In closing, Pease Construction, Inc. states that it will be the policy of Pease Construction, Inc. to afford every practicable opportunity for small, small disadvantaged and women-owned small business concerns to participate in contracts awarded to Pease Construction, Inc. by the Federal Government, to ensure that equitable opportunity is provided to small, small disadvantaged, and women-owned small business concerns to compete for award of subcontracts and purchase orders, and to diligently pursue the achievement of our goals of participation by small, small disadvantaged, and women-owned small businesses in the dollars available for subcontract/purchase order awards under this contract.

By: Pease Construction, Inc.

Patricia A. Candiotta, President

Date: 3-23-99

	Dollars	Percentage
1. Option # 3 total:	266,000	100%
2. Total to be subcontracted to all types of businesses:	245,000	92%
a. Subcontracted to Small Business (including b and c below):	245,000	100%
b. Subcontracted to Small Disadvantaged Businesses:	245,000	100%
c. Subcontracted to Women-Owned Small Businesses:	0	0

	Dollars	Percentage
1. Option # 4 total:	$8,697	100%
2. Total to be subcontracted to all types of businesses:	$8,000	92%
a. Subcontracted to Small Business (including b and c below):	0	0
b. Subcontracted to Small Disadvantaged Businesses:	0	0
c. Subcontracted to Women-Owned Small Businesses:	0	0

FROM: US ARMY ENGR DIST, SEATTLE
PO BOX 3755
SEATTLE, WA 98124-2255
(206) 764-6588, CENWS-CT-CB-MU, Margaret Gillam

1. Refer to Invitation for Bid, DACA67-99-B-0020, dated 5 Feb 1999, entitled, Close Combat Tactical Trainer, Ft. Lewis, Washington.

2. This Amendment No. 0002, dated 9 March 1999, is issued to incorporate the following changes:

a. Changes to specifications sections and drawings:

(1) Section 1061: Paragraph 3.3.1. Revise first sentence to read: "…open between 0730 and 1600 on weekdays…"

(2) Section 1061: Delete Paragraphs 3.3.10 and delete sub-paragraphs 3.3.10.1, 3.3.10.2 and 3.3.10.3.

(3) Section 02221, Paragraph 3.3: Delete all sentences starting with the sentence which reads The excavation shall be completed as quickly as possible to the design depth to protect the foundation soils from drying or infiltration of additional moisture through the sentence To minimize movement due to moisture changes in the expansive soils , the structure shall be founded on spread footings with overexcavation under footings of 600 mm in both depth and width and replacement with a pad of nonswelling, low permeable material.

(4) Section 02515, paragraph 2.2.5 – Flexural Strength. Delete the entire paragraph and replace with: "The specified flexural strength is 4480 kPa at 14 days when tested with ASTM C78."

(5) Section 04200 has duplicate numbering using paragraphs 2.8 and 2.11 on pages 6 and 7 of this section. Paragraph 2.8.1 shall be re-numbered as a result of the change to the re-numbering of the previous paragraph. Accordingly, change the following:

(a) For the second paragraph numbered 2.8, which reads "2.8 Precast Concrete Items" (page 7 of this section), re-number as "Paragraph 2.13 Precast Concrete Items."

(b) For the paragraph numbered 2.8.1, which reads "2.8.1 Copings" (page 8 of this section), re-number as "Paragraph 2.13.1 Copings."

(c) For the second paragraph numbered 2.11 in this section, which reads "2.11 Masonry Sealer, re-number as "Paragraph 2.12 Masonry Sealer."

(6) Section 06412: Delete Paragraph 2.3.4, Plastic Countertops. Replace with the following:

"2.3.4 – Solid Plastic for Window Sills

Solid Plastic for Window Sills: 18.75 mm (3/4 inch) thick similar to Corain manufactured by E. I. Dupont or equivalent; color shall be pearl gray."

(7) Section 06412: Delete Paragraph 3.2.6 , Molded Plastic Countertops. Replace with the following:

"3.2.6 – Solid Plastic for Window Sill

Install solid surfacing window sills in accordance with manufacturers instructions."

(8) Section 07416, Paragraph 1.7.1: Delete the last sentence which reads It shall be understood that the Contractors Performance Bond…for the entire SSSMR system as outlined above. Replace with the following:

It is required that the contractor provide a ***separate bond*** in an amount equal to the installed total roofing system cost in favor of the owner (Government) covering the contractors warranty responsibilities effective throughout the five year contractors warranty period for the entire SSSMR system as outlined above.

(9) Section 09310: Insert new paragraph as follows:

"2.1.3 Exterior Glazed Tile

Tile shall be Chroma 2 as manufactured by Buchtal Corporation or equivalent. Tile shall be 100 mm x 100 mm x 6 mm. Each tile shall have 2 adjacent glazed edges. Color shall be as indicated on the Drawings.

a. Bond Strength (ASTM C 482): 565 psi.
b. Water Absorption (ASTM C 373): 1.6 percent
c. Freeze Thaw (ASTM C 1026): Pass
d. Color Measurement (ASTM C 609): 0.73 judds
e. Acid and Alkali Resistance (EN 106): Pass"

(10) Section 09310, paragraph 3.3, Installation of Wall Tile. Add the following sentence: "Exterior glazed tile shall be installed in accordance with manufacturers recommendations."

(11) Section 15650. Delete all references to ARI ANSI/ARI 550 and replace with ARI 590-1998.

(12) Sec. 15650, Paragraph 2.10.1 "Chiller Performance Test." Delete the last sentence which reads: "Stable operation at minimum load of 10 percent of total capacity shall be demonstrated during the factory test. Replace with: "Chillers with rotary screw compressor(s) shall demonstrate stable operation at minimum load of 10 percent of total capacity. Chillers with reciprocating compressor(s) or scroll compressor(s) shall demonstrate stable operation at minimum load of 20 percent of total capacity."

(13) Specification Section 05300. Note: The 40 mm metal deck (vertical) (shown in Sheets A601 through A606), which is in the wall cavity, uses the same specification (05300) as the roof deck. Interior liner panel inside the Simulator Bay uses specification 07413.

(14) Sheet 1, Plate G001:

(a) Changes to Location Map: Delete Sequalitchew Pit as Disposal Area and change it to read Landfill located Approximately 2 miles off Steilacoom Road on Solo Point Road."

(b) Rename Gravel Borrow shown east of Logistic Center to read Lincoln Pit.

(15) Sheet 10, Plate C1: Chain-link fence around the hardstand to end at southwest corner of the CCTT Building. It will run along the line that is shown to be 12.33 M long.

(16) Sheet 15, Plate C6, Detail 5, Construction, Expansion Joint Detail. Change "30 mm CTR to 300 mm CTR."

(17) Sheet 32, Plate A401, Detail 2, Room Finish Schedule. Under Base Add 23 – Wood Base. Mark - 112, Room Name – Conference Room; change Base Material from 20 to 23; change Base Color from BA to BC.

(18) Sheet 34, Plate A403, Detail 3, Visual Frame Types. Change head dimension from 50mm to 100mm.

(19) Sheet 34, Plate A403, Detail 4, Visual Window Types and Borrow Light Types. Add W4 – Clear Anod. Aluminum, G1 Fixed glazing, 1600 mm wide by 1400 mm high, 50 mm frame and top of frame is 2400 mm above Fin. Flr.

(20) Sheet 38, Plate A501, Detail 1, Enlarged Toilet Plan. Add soap dispensers above each wash basin.

(21) Sheet 44, A-606, Detail 1 Face Brick Type 1. There is another arrow to the same area calling for 40 mm metal deck. Delete referenced arrow and call out for 40mm metal deck.

(22) Sheet 46, Plate A608. Delete partition type P-17.

(23) Sheet 51, Plate A802, Detail 1. Change Solid Plastic Top to Lam. Plastic Top.

(24) Sheet 52, Plate A803, Detail 2. Change Plastic Laminate on 18mm Particle Board Door to “Hardwood Door.”

(25) Sheet 54, Plate A902, signs B16 and B 46 through B49: No Message Required. Reference A201 for location of room divider (accordion partition).

(26) Sheet 72, Plate S401. Delete Detail 10. Plate S402, Detail 5. Add the following Note - Expansion joint (between edge of slab and wall). Joint to be filled with mastic. Provide 400mm smooth dowel bars at 300 mm OC w/ Diameter equal 16mm flush against underside of perpendicular slab reinforcement. Grease all dowel ends in wall.

(27) Sheet 137, Plate E206, Note 3 – Delete “(67.2 square millimeters)”

(28) Sheet 137, Plate E206, Note 4 – Delete.

(29) Sheet 143, Plate E401, Bus Duct homerun in Room 116 and 117. Change “DPA-22” to “DPA-21”, with conductors per Feeder Schedule shown on Plate E404.

(30) Sheet 149, Plate E602, Motor Control Center MCC1 Schedule – Circuit 2, Delete “VSD” in starter type. Circuit 3, Delete “VSD” in starter type.

3. NOTICE TO BIDDERS: The bid opening date and time remain unchanged as:

16 March 1999, 1:00 p.m., local time

4. NOTICE TO BIDDERS: Bidder must acknowledge receipt of this amendment by number and date on bid or by telegram. Please mark outside of envelope in which bid is enclosed to show amendment received.

This page intentionally blank

AMENDMENT OF SOLICITATION/~~MODIFICATION OF CONTRACT~~

1. CONTRACT ID CODE	PAGE OF PAGES
	1 2

2. AMENDMENT/~~MODIFICATION~~ NO.	3. EFFECTIVE DATE	4. REQUISITION/PURCHASE REQ. NO.	5. PROJECT NO. (If applicable)
0001	03/02/99	W68MD9-8349-2262	MCA PN: 43855

6. ISSUED BY CODE W68MD9

US ARMY ENGINEER DISTRICT, SEATTLE
PO BOX 3755
SEATTLE WA 98124-3755

Margaret J Gillam C04(206) 764-6588

7. ADMINISTERED BY (If other than Item 6) CODE

8. NAME AND ADDRESS OF CONTRACTOR (No., street, county, State and ZIP Code) Vendor ID: 00000000

CODE FACILITY CODE

(X) X

9A. AMENDMENT OF SOLICITATION NO.
DACA67-99-B-0020

9B. DATED (SEE ITEM 11)
02/05/99

10A. MODIFICATION OF CONTRACT/ORDER NO.

10B. DATED (SEE ITEM 13)

11. THIS ITEM ONLY APPLIES TO AMENDMENTS OF SOLICITATIONS

☒ The above numbered solicitation is amended as set forth in Item 14. The hour and date specified for receipt of Offers ☒ is extended, ☐ is not extended. Offers must acknowledge receipt of this amendment prior to the hour and date specified in the solicitation or as amended, by one of the following methods: (a) ~~By completing Items 8 and 15, and returning copies of the amendment;~~ (b) By acknowledging receipt of this amendment on each copy of the offer submitted; or (c) By separate letter or telegram which includes a reference to the solicitation and amendment numbers. FAILURE OF YOUR ACKNOWLEDGMENT TO BE RECEIVED AT THE PLACE DESIGNATED FOR THE RECEIPT OF OFFERS PRIOR TO THE HOUR AND DATE SPECIFIED MAY RESULT IN REJECTION OF YOUR OFFER. If by virtue of this amendment you desire to change an offer already submitted, such change may be made by telegram or letter, provided each telegram or letter makes reference to the solicitation and this amendment, and is received prior to the opening hour and date specified.

12. ACCOUNTING AND APPROPRIATION DATA (If required)

13. THIS ITEM APPLIES ONLY TO MODIFICATIONS OF CONTRACTS/ORDERS, IT MODIFIES THE CONTRACT/ORDER NO. AS DESCRIBED IN ITEM 14.

(X) A. THIS CHANGE ORDER IS ISSUED PURSUANT TO: (Specify authority) THE CHANGES SET FORTH IN ITEM 14 ARE MADE IN THE CONTRACT ORDER NO. IN ITEM 10A.

B. THE ABOVE NUMBERED CONTRACT/ORDER IS MODIFIED TO REFLECT THE ADMINISTRATIVE CHANGES (such as changes in paying office, appropriation date, etc.) SET FORTH IN ITEM 14, PURSUANT TO THE AUTHORITY OF FAR 43.103 (b).

C. THIS SUPPLEMENTAL AGREEMENT IS ENTERED INTO PURSUANT TO AUTHORITY OF:

D. OTHER (Specify type of modification and authority)

E. IMPORTANT: Contractor ☒ is not. ☐ is required to sign this document and return copies to the issuing office.

14. DESCRIPTION OF AMENDMENT/~~MODIFICATION~~ (Organized by UCF section headings, including solicitation/contract subject matter where feasible.)

DACA67-99-B-0020. CLOSE COMBAT TACTICAL TRAINER, FT. LEWIS, WASHINGTON

A This amendment provides for the following revisions to this solicitation

(1) Section 00010, Page 00010-1, Standard Form 1442, Block 13A reflects a revised bid opening date from 9 MARCH 1999 to 16 MARCH 1999 The bid opening hour remains 1:00 p.m., local

Except as provided herein, all terms and conditions of the document referenced in Item 9A or 10A, as heretofore changed, remains unchanged and in full force and effect.

15A. NAME AND TITLE OF SIGNER (Type or print)		16A. NAME AND TITLE OF CONTRACTING OFFICER (Type or print)	
15B. CONTRACTOR/OFFEROR (Signature of person authorized to sign)	15C. DATE SIGNED	16B. UNITED STATES OF AMERICA BY (Signature of Contracting Officer)	16C. DATE SIGNED

time.

(2) Page 00010-4, Schedule, is revised to reflect a change in the quantity in Bid Item 0003.

(3) Miscellaneous revisions to Section 00800, Special Clauses, including:

(a) Page 00800-16 "Modifications to Contract Drawings" added

(b) Page 00800-17 "List of Sketches/Drawings Attached" added

(c) Pages 00800-18 through 00800-23 (unnumbered pages), six revised drawings attached. PLEASE NOTE: Drawings 204A, 205A and 205B should be printed on 11" x 17" paper.

(d) Page 00800-24, new "End of Section" page added

(4) Miscellaneous revisions to Technical Specifications Sections 08700, 15950 and 16721.

B. The attached revised pages supercede and replace like-numbered pages and should be inserted in sequence. Changes are marked by strike-through, underlining and perpendicular lines in the margin.

C. NOTICE TO BIDDERS: Bidders must acknowledge receipt of this amendment by number and date on bid or by telegram. Please mark outside of envelope in which bid is enclosed to show amendment received.

D. NOTICE TO BIDDERS: The bid opening time and date is EXTENDED to 1:00 p.m., local time, on 16 March 1999.

Enclosures:
1. 00010-1, SF1442
2. 00010-4
3. 00800-i through 00800 24
4. 08700 (pages 1 through 14)
5. 15950 (pages 1 through 40)
6. 16721 (pages 1 through 14)

TABLE OF CONTENTS

SECTION 00700
CONTRACT CLAUSES

1	52.252-2	CLAUSES INCORPORATED BY REFERENCE (FEB 1998)
2	52.201-4001	SUCCESSOR CONTRACTING OFFICERS (52.0201-4001)
3	52.201-7000	CONTRACTING OFFICER'S REPRESENTATIVE (DEC 1991)
4	52.202-1 I	DEFINITIONS (OCT 1995)--ALTERNATE I (APR 1984)
5	52.203-3	GRATUITIES (APR 1984)
6	52.203-5	COVENANT AGAINST CONTINGENT FEES (APR 1984)
7	52.203-7	ANTI-KICKBACK PROCEDURES (JUL 1995)
8	52.203-8	CANCELLATION, RESCISSION, AND RECOVERY OF FUNDS FOR ILLEGAL OR IMPROPER ACTIVITY (JAN 1997)
9	52.203-10	PRICE OR FEE ADJUSTMENT FOR ILLEGAL OR IMPROPER ACTIVITY (JAN 1997)
10	52.203-12	LIMITATION ON PAYMENTS TO INFLUENCE CERTAIN FEDERAL TRANSACTIONS (JUN 1997)
11	52.203-7001	SPECIAL PROHIBITION ON EMPLOYMENT (JUN 1997)
12	52.203-7002	DISPLAY OF DOD HOTLINE POSTER (DEC 1991)
13	52.204-4	PRINTING/COPYING DOUBLE-SIDED ON RECYCLED PAPER (JUN 1996)
14	52.204-7003	CONTROL OF GOVERNMENT PERSONNEL WORK PRODUCT (APR 1992)
15	52.209-6	PROTECTING THE GOVERNMENT'S INTEREST WHEN SUBCONTRACTING WITH CONTRACTOR DEBARRED, SUSPENDED, OR PROPOSED FOR DEBARMENT (JUL 1995)
16	52.209-7004	SUBCONTRACTING WITH FIRMS THAT ARE OWNED OR CONTROLLED BY THE GOVERNMENT OF A TERRORIST COUNTRY (MAR 1998)
17	52.211-18	VARIATION IN ESTIMATED QUANTITY (APR 1984)
18	52.214-26	AUDIT AND RECORDS--SEALED BIDDING (OCT 1997)
19	52.214-27	PRICE REDUCTION FOR DEFECTIVE COST OR PRICING DATA--MODIFICATIONS--SEALED BIDDING (OCT 1997)
20	52.214-28	SUBCONTRACTOR COST OR PRICING DATA--MODIFICATIONS-SEALED BIDDING (OCT 1997)
21	52.214-29	ORDER OF PRECEDENCE--SEALED BIDDING (JAN 1986)
22	52.219-8	UTILIZATION OF SMALL BUSINESS CONCERNS (JAN 1999)
23	52.219-9 I	SMALL BUSINESS SUBCONTRACTING PLAN (JAN 1999)--ALTERNATE I (JAN 1999)
24	52.219-14	LIMITATIONS ON SUBCONTRACTING (DEC 1996)
25	52.219-16	LIQUIDATED DAMAGES--SUBCONTRACTING PLAN (JAN 1999)
26	52.222-3	CONVICT LABOR (AUG 1996)
27	52.222-4	CONTRACT WORK HOURS AND SAFETY STANDARDS ACT--OVERTIME COMPENSATION (JUL 1995)
28	52.222-6	DAVIS-BACON ACT (FEB 1995)
29	52.222-7	WITHHOLDING OF FUNDS (FEB 1988)
30	52.222-8	PAYROLLS AND BASIC RECORDS (FEB 1988)
31	52.222-9	APPRENTICES AND TRAINEES (FEB 1988)
32	52.222-10	COMPLIANCE WITH COPELAND ACT REQUIREMENTS (FEB 1988)
33	52.222-11	SUBCONTRACTS (LABOR STANDARDS) (FEB 1988)
34	52.222-12	CONTRACT TERMINATION--DEBARMENT (FEB 1988)
35	52.222-13	COMPLIANCE WITH DAVIS-BACON AND RELATED ACT REGULATIONS (FEB 1988)
36	52.222-14	DISPUTES CONCERNING LABOR STANDARDS (FEB 1988)
37	52.222-15	CERTIFICATION OF ELIGIBILITY (FEB 1988)
38	52.222-23	NOTICE OF REQUIREMENT FOR AFFIRMATIVE ACTION TO ENSURE EQUAL EMPLOYMENT OPPORTUNITY (APR 1984)
39	52.222-26	EQUAL OPPORTUNITY (APR 1984)
40	52.222-27	AFFIRMATIVE ACTION COMPLIANCE REQUIREMENTS FOR CONSTRUCTION (APR 1984)

41	52.222-35	AFFIRMATIVE ACTION FOR DISABLED VETERANS AND VETERANS OF THE VIETNAM ERA (APR 1998)
42	52.222-36	AFFIRMATIVE ACTION FOR WORKERS WITH DISABILITIES (JUN 1998)
43	52.222-37	EMPLOYMENT REPORTS ON DISABLED VETERANS AND VETERANS OF THE VIETNAM ERA (JAN 1999)
44	52.223-2	CLEAN AIR AND WATER (APR 1984)
45	52.223-6	DRUG-FREE WORKPLACE (JAN 1997)
46	52.223-14	TOXIC CHEMICAL RELEASE REPORTING (OCT 1996)
47	52.225-11	RESTRICTIONS ON CERTAIN FOREIGN PURCHASES (AUG 1998)
48	52.225-15	BUY AMERICAN ACT--CONSTRUCTION MATERIALS UNDER TRADE AGREEMENTS ACT AND NORTH AMERICAN FREE TRADE AGREEMENT (JUN 1997)
49	52.225-15 I	BUY AMERICAN ACT--CONSTRUCTION MATERIALS UNDER TRADE AGREEMENTS ACT AND NORTH AMERICAN FREE TRADE AGREEMENT (JUN 1997)--ALTERNATE I (MAY 1997)
50	52.225-22	BALANCE OF PAYMENTS PROGRAM--CONSTRUCTION MATERIALS--NAFTA (MAY 1997)
51	52.226-1	UTILIZATION OF INDIAN ORGANIZATIONS AND INDIAN-OWNED ECONOMIC ENTERPRISE (JAN 1999)
52	52.227-1	AUTHORIZATION AND CONSENT (JUL 1995)
53	52.227-2	NOTICE AND ASSISTANCE REGARDING PATENT AND COPYRIGHT INFRINGEMENT (AUG 1996)
54	52.227-4	PATENT INDEMNITY--CONSTRUCTION CONTRACTS (APR 1984)
55	52.227-7033	RIGHTS IN SHOP DRAWINGS (APR 1966)
56	52.228-2	ADDITIONAL BOND SECURITY (OCT 1997)
57	52.228-12	PROSPECTIVE SUBCONTRACTOR REQUESTS FOR BONDS (OCT 1995)
58	52.229-3	FEDERAL, STATE, AND LOCAL TAXES (JAN 1991)
59	52.231-5000	EQUIPMENT OWNERSHIP AND OPERATING EXPENSE SCHEDULE (MAR 1995)--EFARS
60	52.231-7000	SUPPLEMENTAL COST PRINCIPLES (DEC 1991)
61	52.232-5	PAYMENTS UNDER FIXED-PRICE CONSTRUCTION CONTRACTS (MAY 1997)
62	52.232-17	INTEREST (JUN 1996)
63	52.232-23	ASSIGNMENT OF CLAIMS (JAN 1986)
64	52.232-27	PROMPT PAYMENT FOR CONSTRUCTION CONTRACTS (JUN 1997)
65	52.232-33	MANDATORY INFORMATION FOR ELECTRONIC FUNDS TRANSFER PAYMENT (AUG 1996)
66	52.232-34	OPTIONAL INFORMATION FOR ELECTRONIC FUNDS TRANSFER PAYMENT (AUG 1996)
67	52.232-7009	PAYMENT BY ELECTRONIC FUNDS TRANSFER (CCR) (JUN 1998)
68	52.233-1 I	DISPUTES (OCT 1995)--ALTERNATE I (DEC 1991)
69	52.233-3	PROTEST AFTER AWARD (AUG 1996)
70	52.236-2	DIFFERING SITE CONDITIONS (APR 1984)
71	52.236-3	SITE INVESTIGATION AND CONDITIONS AFFECTING THE WORK (APR 1984)
72	52.236-5	MATERIAL AND WORKMANSHIP (APR 1984)
73	52.236-6	SUPERINTENDENCE BY THE CONTRACTOR (APR 1984)
74	52.236-7	PERMITS AND RESPONSIBILITIES (NOV 1991)
75	52.236-8	OTHER CONTRACTS (APR 1984)
76	52.236-9	PROTECTION OF EXISTING VEGETATION, STRUCTURES, EQUIPMENT, UTILITIES, AND IMPROVEMENTS (APR 1984)
77	52.236-10	OPERATIONS AND STORAGE AREAS (APR 1984)
78	52.236-11	USE AND POSSESSION PRIOR TO COMPLETION (APR 1984)
79	52.236-12	CLEANING UP (APR 1984)
80	52.236-13	ACCIDENT PREVENTION (NOV 1991)
81	52.236-14	AVAILABILITY AND USE OF UTILITY SERVICES (APR 1984)
82	52.236-15	SCHEDULES FOR CONSTRUCTION CONTRACTS (APR 1984)
83	52.236-21	SPECIFICATIONS AND DRAWINGS FOR CONSTRUCTION (FEB 1997)
84	52.236-26	PRECONSTRUCTION CONFERENCE (FEB 1995)
85	52.236-7000	MODIFICATION PROPOSALS--PRICE BREAKDOWN (DEC 1991)
86	52.242-13	BANKRUPTCY (JUL 1995)
87	52.242-14	SUSPENSION OF WORK (APR 1984)
88	52.243-4	CHANGES (AUG 1987)

89	52.243-7001	PRICING OF CONTRACT MODIFICATIONS (DEC 1991)
90	52.244-6	SUBCONTRACTS FOR COMMERCIAL ITEMS AND COMMERCIAL COMPONENTS (OCT 1998)
91	52.246-12	INSPECTION OF CONSTRUCTION (AUG 1996)
92	52.248-3	VALUE ENGINEERING--CONSTRUCTION (MAR 1989)
93	52.248-7000	PREPARATION OF VALUE ENGINEERING CHANGE PROPOSALS (MAY 1994)
94	52.249-2 I	TERMINATION FOR CONVENIENCE OF THE GOVERNMENT (FIXED-PRICE) (SEP 1996)-- ALTERNATE I (SEP 1996)
95	52.249-10	DEFAULT (FIXED-PRICE CONSTRUCTION) (APR 1984)
96	52.249-5000	BASIS FOR SETTLEMENT OF PROPOSALS
97	52.252-4	ALTERATIONS IN CONTRACT (APR 1984)
98	52.253-1	COMPUTER GENERATED FORMS (JAN 1991)
		SECTION 00700

CONTRACT CLAUSES

1 52.252-2 CLAUSES INCORPORATED BY REFERENCE (FEB 1998)

This contract incorporates one or more clauses by reference, with the same force and effect as if they were given in full text. Upon request, the Contracting Officer will make their full text available. Also, the full text of a clause may be accessed electronically at these addresses:

http://www.arnet.gov/far
http://farsite.hill.af.mil
http://www.dtic.mil/dfars

(End of clause)

2 52.201-4001 SUCCESSOR CONTRACTING OFFICERS (52.0201-4001)

The Contracting Officer who signed this contract is the primary Contracting Officer for the contract. Neverthless, any Contracting Officer assigned to the Seattle District and acting within his/her authority may take formal action on this contract when a contract action needs to be taken and the primary Contracting Officer is unavailable.

3 52.201-7000 CONTRACTING OFFICER'S REPRESENTATIVE (DEC 1991)

(a) Definition. "Contracting officer's representative" means an individual designated in accordance with subsection 201.602-2 of the Defense Federal Acquisition Regulation Supplement and authorized in writing by the Contracting Officer to perform specific technical or administrative functions.

(b) If the Contracting Officer designates a contracting officer's representative (COR), the Contractor will receive a copy of the written designation. It will specify the extent of the COR's authority to act on behalf of the Contracting Officer. The COR is not authorized to make any commitments or changes that will affect price, quality, quantity, delivery, or any other term or condition of the contract.

(End of clause)

4 52.202-1 I DEFINITIONS (OCT 1995)--ALTERNATE I (APR 1984)

(a) "Head of the agency" (also called "agency head") or "Secretary" means the Secretary (or Attorney General, Administrator, Governor, Chairperson, or other chief official, as appropriate) of the agency, including any deputy or assistant chief official of the agency; and the term "authorized representative" means any person, persons, or board (other than the Contracting Officer) authorized to act for the head of the agency or Secretary.

(b) Commercial component means any component that is a commercial item.

(c) Component means any item supplied to the Federal Government as part of an end item or of another component.

(d) Nondevelopmental item means--

(1) Any previously developed item of supply used exclusively for governmental purposes by a Federal agency, a State or local government, or a foreign government with which the United States has a mutual defense

cooperation agreement;

(2) Any item described in paragraph (e)(1) of this definition that requires only minor modification or modifications of a type customarily available in the commercial marketplace in order to meet the requirements of the procuring department or agency; or

(3) Any item of supply being produced that does not meet the requirements of paragraph (e)(1) or (e)(2) solely because the item is not yet in use.

(e) "Contracting Officer" means a person with the authority to enter into, administer, and/or terminate contracts and make related determinations and findings. The term includes certain authorized representatives of the Contracting Officer acting within the limits of their authority as delegated by the Contracting Officer.

(f) Except as otherwise provided in this contract, the term "subcontracts" includes, but is not limited to, purchase orders and changes and modifications to purchase orders under this contract.

(End of clause)

5 52.203-3 GRATUITIES (APR 1984)

(a) The right of the Contractor to proceed may be terminated by written notice if, after notice and hearing, the agency head or a designee determines that the Contractor, its agent, or another representative--

(1) Offered or gave a gratuity (e.g., an entertainment or gift) to an officer, official, or employee of the Government; and

(2) Intended, by the gratuity, to obtain a contract or favorable treatment under a contract.

(b) The facts supporting this determination may be reviewed by any court having lawful jurisdiction.

(c) If this contract is terminated under paragraph (a) above, the Government is entitled--

(1) To pursue the same remedies as in a breach of the contract; and

(2) In addition to any other damages provided by law, to exemplary damages of not less than 3 nor more than 10 times the cost incurred by the Contractor in giving gratuities to the person concerned, as determined by the agency head or a designee. (This subparagraph (c)(2) is applicable only if this contract uses money appropriated to the Department of Defense.)

(d) The rights and remedies of the Government provided in this clause shall not be exclusive and are in addition to any other rights and remedies provided by law or under this contract.

(End of clause)

(R 7-104.16 1952 MAR)

6 52.203-5 COVENANT AGAINST CONTINGENT FEES (APR 1984)

(a) The Contractor warrants that no person or agency has been employed or retained to solicit or obtain this contract upon an agreement or understanding for a contingent fee, except a bona fide employee or agency. For breach or violation of this warranty, the Government shall have the right to annul this contract without liability or, in its discretion, to deduct from the contract price or consideration, or otherwise recover, the full amount of the contingent fee.

(b) "Bona fide agency," as used in this clause, means an established commercial or selling agency, maintained by a contractor for the purpose

of securing business, that neither exerts nor proposes to exert improper influence to solicit or obtain Government contracts nor holds itself out as being able to obtain any Government contract or contracts through improper influence.

"Bona fide employee," as used in this clause, means a person, employed by a Contractor and subject to the Contractor's supervision and control as to time, place, and manner of performance, who neither exerts nor proposes to exert improper influence to solicit or obtain Government contracts nor holds out as being able to obtain any Government contract or contracts through improper influence.

"Contingent fee," as used in this clause, means any commission, percentage, brokerage, or other fee that is contingent upon the success that a person or concern has in securing a Government contract.

"Improper influence," as used in this clause, means any influence that induces or tends to induce a Government employee or officer to give consideration or to act regarding a Government contract on any basis other than the merits of the matter.

(End of clause)
(R 7-103.20 1958 JAN)
(R 1-1.503)
(R 1-7.102-18)

7 52.203-7 ANTI-KICKBACK PROCEDURES (JUL 1995)

(a) Definitions.

"Kickback," as used in this clause, means any money, fee, commission, credit, gift, gratuity, thing of value, or compensation of any kind which is provided, directly or indirectly, to any prime Contractor, prime Contractor employee, subcontractor, or subcontractor employee for the purpose of improperly obtaining or rewarding favorable treatment in connection with a prime contract or in connection with a subcontract relating to a prime contract.

"Person," as used in this clause, means a corporation, partnership, business association of any kind, trust, joint-stock company, or individual.

"Prime contract," as used in this clause, means a contract or contractual action entered into by the United States for the purpose of obtaining supplies, materials, equipment, or services of any kind.

"Prime Contractor" as used in this clause, means a person who has entered into a prime contract with the United States.

"Prime Contractor employee," as used in this clause, means any officer, partner, employee, or agent of a prime Contractor.

"Subcontract," as used in this clause, means a contract or contractual action entered into by a prime Contractor or subcontractor for the purpose of obtaining supplies, materials, equipment, or services of any kind under a prime contract.

"Subcontractor," as used in this clause, (1) means any person, other than the prime Contractor, who offers to furnish or furnishes any supplies, materials, equipment, or services of any kind under a prime contract or a subcontract entered into in connection with such prime contract, and (2) includes any person who offers to furnish or furnishes general supplies to the prime Contractor or a higher tier subcontractor.

"Subcontractor employee," as used in this clause, means any officer, partner, employee, or agent of a subcontractor.

(b) The Anti-Kickback Act of 1986 (41 U.S.C. 51-58) (the Act), prohibits any person from--

(1) Providing or attempting to provide or offering to provide any kickback;

(2) Soliciting, accepting, or attempting to accept any kickback; or

(3) Including, directly or indirectly, the amount of any kickback in the contract price charged by a prime Contractor to the United States or in the contract price charged by a subcontractor to a prime Contractor or higher tier subcontractor.

(c)(1) The Contractor shall have in place and follow reasonable procedures designed to prevent and detect possible violations described in paragraph (b) of this clause in its own operations and direct business relationships.

(2) When the Contractor has reasonable grounds to believe that a violation described in paragraph (b) of this clause may have occurred, the Contractor shall promptly report in writing the possible violation. Such reports shall be made to the inspector general of the contracting agency, the head of the contracting agency if the agency does not have an inspector general, or the Department of Justice.

(3) The Contractor shall cooperate fully with any Federal agency investigating a possible violation described in paragraph (b) of this clause.

(4) The Contracting Officer may (i) offset the amount of the kickback against any monies owed by the United States under the prime contract and/or (ii) direct that the Prime Contractor withhold from sums owed a subcontractor under the prime contract the amount of the kickback. The Contracting Officer may order that monies withheld under subdivision (c)(4)(ii) of this clause be paid over to the Government unless the Government has already offset those monies under subdivision (c)(4)(i) of this clause. In either case, the Prime Contractor shall notify the Contracting Officer when the monies are withheld.

(5) The Contractor agrees to incorporate the substance of this clause, including subparagraph (c)(5) but excepting subparagraph (c)(1), in all subcontracts under this contract which exceed $100,000.

(End of clause)

8 52.203-8 CANCELLATION, RESCISSION, AND RECOVERY OF FUNDS FOR ILLEGAL OR IMPROPER ACTIVITY (JAN 1997)

(a) If the Government receives information that a contractor or a person has engaged in conduct constituting a violation of subsection (a), (b), (c), or (d) of Section 27 of the Office of Federal Procurement Policy Act (41 U.S.C. 423) (the Act), as amended by section 4304 of the National Defense Authorization Act for Fiscal Year 1996 (Pub. L. 104-106), the Government may--

(1) Cancel the solicitation, if the contract has not yet been awarded or issued; or

(2) Rescind the contract with respect to which--

(i) The Contractor or someone acting for the Contractor has been convicted for an offense where the conduct constitutes a violation of subsection 27 (a) or (b) of the Act for the purpose of either--

(A) Exchanging the information covered by such subsections for anything of value; or

(B) Obtaining or giving anyone a competitive advantage in the award of a Federal agency procurement contract; or

(ii) The head of the contracting activity has determined, based upon a preponderance of the evidence, that the Contractor or someone acting for the Contractor has engaged in conduct constituting an offense

punishable under subsection 27(e)(1) of the Act.

(b) If the Government rescinds the contract under paragraph (a) of this clause, the Government is entitled to recover, in addition to any penalty prescribed by law, the amount expended under the contract.

(c) The rights and remedies of the Government specified herein are not exclusive, and are in addition to any other rights and remedies provided by law, regulation, or under this contract.

(End of clause)

9 52.203-10 PRICE OR FEE ADJUSTMENT FOR ILLEGAL OR IMPROPER ACTIVITY (JAN 1997)

(a) The Government, at its election, may reduce the price of a fixed-price type contract and the total cost and fee under a cost-type contract by the amount of profit or fee determined as set forth in paragraph (b) of this clause if the head of the contracting activity or designee determines that there was a violation of subsection 27 (a), (b), or (c) of the Office of Federal Procurement Policy Act, as amended (41 U.S.C. 423), as implemented in section 3.104 of the Federal Acquisition Regulation.

(b) The price or fee reduction referred to in paragraph (a) of this clause shall be--

(1) For cost-plus-fixed-fee contracts, the amount of the fee specified in the contract at the time of award;

(2) For cost-plus-incentive-fee contracts, the target fee specified in the contract at the time of award, notwithstanding any minimum fee or "fee floor" specified in the contract;

(3) For cost-plus-award-fee contracts--

(i) The base fee established in the contract at the time of contract award;

(ii) If no base fee is specified in the contract, 30 percent of the amount of each award fee otherwise payable to the Contractor for each award fee evaluation period or at each award fee determination point.

(4) For fixed-price-incentive contracts, the Government may--

(i) Reduce the contract target price and contract target profit both by an amount equal to the initial target profit specified in the contract at the time of contract award; or

(ii) If an immediate adjustment to the contract target price and contract target profit would have a significant adverse impact on the incentive price revision relationship under the contract, or adversely affect the contract financing provisions, the Contracting Officer may defer such adjustment until establishment of the total final price of the contract. The total final price established in accordance with the incentive price revision provisions of the contract shall be reduced by an amount equal to the initial target profit specified in the contract at the time of contract award and such reduced price shall be the total final contract price.

(5) For firm-fixed-price contracts, by 10 percent of the initial contract price or a profit amount determined by the Contracting Officer from records or documents in existence prior to the date of the contract award.

(c) The Government may, at its election, reduce a prime contractor's price or fee in accordance with the procedures of paragraph (b) of this clause for violations of the Act by its subcontractors by an amount not to exceed the amount of profit or fee reflected in the subcontract at the time the subcontract was first definitively priced.

(d) In addition to the remedies in paragraphs (a) and (c) of this clause, the Government may terminate this contract for default. The rights and remedies of the Government specified herein are not exclusive, and are in addition to any other rights and remedies provided by law or under this contract.

(End of clause)

10 52.203-12 LIMITATION ON PAYMENTS TO INFLUENCE CERTAIN FEDERAL TRANSACTIONS (JUN 1997)

(a) Definitions.

"Agency," as used in this clause, means executive agency as defined in 2.101.

"Covered Federal action," as used in this clause, means any of the following Federal actions:

(1) The awarding of any Federal contract.

(2) The making of any Federal grant.

(3) The making of any Federal loan.

(4) The entering into of any cooperative agreement.

(5) The extension, continuation, renewal, amendment, or modification of any Federal contract, grant, loan, or cooperative agreement.

"Indian tribe" and "tribal organization," as used in this clause, have the meaning provided in section 4 of the Indian Self-Determination and Education Assistance Act (25 U.S.C. 450B) and include Alaskan Natives.

"Influencing or attempting to influence," as used in this clause, means making, with the intent to influence, any communication to or appearance before an officer or employee of any agency, a Member of Congress, an officer or employee of Congress, or an employee of a Member of Congress in connection with any covered Federal action.

"Local government," as used in this clause, means a unit of government in a State and, if chartered, established, or otherwise recognized by a State for the performance of a governmental duty, including a local public authority, a special district, an intrastate district, a council of governments, a sponsor group representative organization, and any other instrumentality of a local government.

"Officer or employee of an agency," as used in this clause, includes the following individuals who are employed by an agency:

(1) An individual who is appointed to a position in the Government under title 5, United States Code, including a position under a temporary appointment.

(2) A member of the uniformed services, as defined in subsection 101(3), title 37, United States Code.

(3) A special Government employee, as defined in section 202, title 18, United States Code.

(4) An individual who is a member of a Federal advisory committee, as defined by the Federal Advisory Committee Act, title 5, United States Code, appendix 2.

"Person," as used in this clause, means an individual, corporation, company, association, authority, firm, partnership, society, State, and local government, regardless of whether such entity is operated for profit, or not for profit. This term excludes an Indian tribe, tribal organization, or any other Indian organization with respect to expenditures specifically permitted by other Federal law.

"Reasonable compensation," as used in this clause, means, with respect to a regularly employed officer or employee of any person, compensation that is consistent with the normal compensation for such officer or

employee for work that is not furnished to, not funded by, or not furnished in cooperation with the Federal Government.

"Reasonable payment," as used in this clause, means, with respect to professional and other technical services, a payment in an amount that is consistent with the amount normally paid for such services in the private sector.

"Recipient," as used in this clause, includes the Contractor and all subcontractors. This term excludes an Indian tribe, tribal organization, or any other Indian organization with respect to expenditures specifically permitted by other Federal law.

"Regularly employed," as used in this clause, means, with respect to an officer or employee of a person requesting or receiving a Federal contract, an officer or employee who is employed by such person for at least 130 working days within 1 year immediately preceding the date of the submission that initiates agency consideration of such person for receipt of such contract. An officer or employee who is employed by such person for less than 130 working days within 1 year immediately preceding the date of the submission that initiates agency consideration of such person shall be considered to be regularly employed as soon as he or she is employed by such person for 130 working days.

"State," as used in this clause, means a State of the United States, the District of Columbia, the Commonwealth of Puerto Rico, a territory or possession of the United States, an agency or instrumentality of a State, and multi-State, regional, or interstate entity having governmental duties and powers.

(b) Prohibitions.

(1) Section 1352 of title 31, United States Code, among other things, prohibits a recipient of a Federal contract, grant, loan, or cooperative agreement from using appropriated funds to pay any person for influencing or attempting to influence an officer or employee of any agency, a Member of Congress, an officer or employee of Congress, or an employee of a Member of Congress in connection with any of the following covered Federal actions: the awarding of any Federal contract; the making of any Federal grant; the making of any Federal loan; the entering into of any cooperative agreement; or the modification of any Federal contract, grant, loan, or cooperative agreement.

(2) The Act also requires Contractors to furnish a disclosure if any funds other than Federal appropriated funds (including profit or fee received under a covered Federal transaction) have been paid, or will be paid, to any person for influencing or attempting to influence an officer or employee of any agency, a Member of Congress, an officer or employee of Congress, or an employee of a Member of Congress in connection with a Federal contract, grant, loan, or cooperative agreement.

(3) The prohibitions of the Act do not apply under the following conditions:

(i) Agency and legislative liaison by own employees.

(A) The prohibition on the use of appropriated funds, in subparagraph (b)(1) of this clause, does not apply in the case of a payment of reasonable compensation made to an officer or employee of a person requesting or receiving a covered Federal action if the payment is for agency and legislative liaison activities not directly related to a covered Federal action.

(B) For purposes of subdivision (b)(3)(i)(A) of this clause, providing any information specifically requested by an agency or Congress is permitted at any time.

(C) The following agency and legislative liaison activities are permitted at any time where they are not related to a specific

solicitation for any covered Federal action:

(1) Discussing with an agency the qualities and characteristics (including individual demonstrations) of the person's products or services, conditions or terms of sale, and service capabilities.

(2) Technical discussions and other activities regarding the application or adaptation of the person's products or services for an agency's use.

(D) The following agency and legislative liaison activities are permitted where they are prior to formal solicitation of any covered Federal action--

(1) Providing any information not specifically requested but necessary for an agency to make an informed decision about initiation of a covered Federal action;

(2) Technical discussions regarding the preparation of an unsolicited proposal prior to its official submission; and

(3) Capability presentations by persons seeking awards from an agency pursuant to the provisions of the Small Business Act, as amended by Pub. L. 95-507, and subsequent amendments.

(E) Only those services expressly authorized by subdivision (b)(3)(i)(A) of this clause are permitted under this clause.

(ii) Professional and technical services.

(A) The prohibition on the use of appropriated funds, in subparagraph (b)(1) of this clause, does not apply in the case of--

(1) A payment of reasonable compensation made to an officer or employee of a person requesting or receiving a covered Federal action or an extension, continuation, renewal, amendment, or modification of a covered Federal action, if payment is for professional or technical services rendered directly in the preparation, submission, or negotiation of any bid, proposal, or application for that Federal action or for meeting requirements imposed by or pursuant to law as a condition for receiving that Federal action.

(2) Any reasonable payment to a person, other than an officer or employee of a person requesting or receiving a covered Federal action or an extension, continuation, renewal, amendment, or modification of a covered Federal action if the payment is for professional or technical services rendered directly in the preparation, submission, or negotiation of any bid, proposal, or application for that Federal action or for meeting requirements imposed by or pursuant to law as a condition for receiving that Federal action. Persons other than officers or employees of a person requesting or receiving a covered Federal action include consultants and trade associations.

(B) For purposes of subdivision (b)(3)(ii)(A) of this clause, "professional and technical services" shall be limited to advice and analysis directly applying any professional or technical discipline. For example, drafting of a legal document accompanying a bid or proposal by a lawyer is allowable. Similarly, technical advice provided by an engineer on the performance or operational capability of a piece of equipment rendered directly in the negotiation of a contract is allowable. However, communications with the intent to influence made by a professional (such as a licensed lawyer) or a technical person (such as a licensed accountant) are not allowable under this section unless they provide advice and analysis directly applying their professional or technical expertise and unless the advice or analysis is rendered directly and solely in the preparation, submission or negotiation of a covered Federal action. Thus, for example,

communications with the intent to influence made by a lawyer that do not provide legal advice or analysis directly and solely related to the legal aspects of his or her client's proposal, but generally advocate one proposal over another are not allowable under this section because the lawyer is not providing professional legal services. Similarly, communications with the intent to influence made by an engineer providing an engineering analysis prior to the preparation or submission of a bid or proposal are not allowable under this section since the engineer is providing technical services but not directly in the preparation, submission or negotiation of a covered Federal action.

(C) Requirements imposed by or pursuant to law as a condition for receiving a covered Federal award include those required by law or regulation and any other requirements in the actual award documents.

(D) Only those services expressly authorized by subdivisions (b)(3)(ii)(A)(1) and (2) of this clause are permitted under this clause.

(E) The reporting requirements of FAR 3.803(a) shall not apply with respect to payments of reasonable compensation made to regularly employed officers or employees of a person.

(c) Disclosure.

(1) The Contractor who requests or receives from an agency a Federal contract shall file with that agency a disclosure form, OMB standard form LLL, Disclosure of Lobbying Activities, if such person has made or has agreed to make any payment using nonappropriated funds (to include profits from any covered Federal action), which would be prohibited under subparagraph (b)(1) of this clause, if paid for with appropriated funds.

(2) The Contractor shall file a disclosure form at the end of each calendar quarter in which there occurs any event that materially affects the accuracy of the information contained in any disclosure form previously filed by such person under subparagraph (c)(1) of this clause. An event that materially affects the accuracy of the information reported includes--

(i) A cumulative increase of $25,000 or more in the amount paid or expected to be paid for influencing or attempting to influence a covered Federal action; or

(ii) A change in the person(s) or individual(s) influencing or attempting to influence a covered Federal action; or

(iii) A change in the officer(s), employee(s), or Member(s) contacted to influence or attempt to influence a covered Federal action.

(3) The Contractor shall require the submittal of a certification, and if required, a disclosure form by any person who requests or receives any subcontract exceeding $100,000 under the Federal contract.

(4) All subcontractor disclosure forms (but not certifications) shall be forwarded from tier to tier until received by the prime Contractor. The prime Contractor shall submit all disclosures to the Contracting Officer at the end of the calendar quarter in which the disclosure form is submitted by the subcontractor. Each subcontractor certification shall be retained in the subcontract file of the awarding Contractor.

(d) Agreement. The Contractor agrees not to make any payment prohibited by this clause.

(e) Penalties.

(1) Any person who makes an expenditure prohibited under paragraph

(a) of this clause or who fails to file or amend the disclosure form to be filed or amended by paragraph (b) of this clause shall be subject to

civil penalties as provided for by 31 U.S.C. 1352. An imposition of a civil penalty does not prevent the Government from seeking any other remedy that may be applicable.

(2) Contractors may rely without liability on the representation made by their subcontractors in the certification and disclosure form.

(f) Cost allowability. Nothing in this clause makes allowable or reasonable any costs which would otherwise be unallowable or unreasonable. Conversely, costs made specifically unallowable by the requirements in this clause will not be made allowable under any other provision.

(End of clause)

11 52.203-7001 SPECIAL PROHIBITION ON EMPLOYMENT (JUN 1997)

(a) Definitions.

As used in this clause--

(1) "Arising out of a contract with the DoD" means any act in connection with--

(i) Attempting to obtain,

(ii) Obtaining, or

(iii) Performing a contract or first-tier subcontract of any agency, department, or component of the Department of Defense (DoD).

(2) "Conviction of fraud or any other felony" means any conviction for fraud or a felony in violation of state or Federal criminal statutes, whether entered on a verdict or plea, including a plea of nolo contendere, for which sentence has been imposed.

(3) "Date of conviction" means the date judgment was entered against the individual.

(b) 10 U.S.C. 2408 provides that any individual who is convicted after September 29, 1988, of fraud or any other felony arising out of a contract with the DoD is prohibited from:

(1) Working in a management or supervisory capacity on any DoD contract or first-tier subcontract;

(2) Serving on the board of directors of any DoD Contractor or first-tier subcontractor; or

(3) Serving as a consultant to any DoD Contractor or first-tier subcontractor.

(c) Unless waived, the prohibition in paragraph (b) applies for five years from the date of conviction.

(d) 10 U.S.C. 2408 further provides that a defense Contractor or first-tier subcontractor shall be subject to a criminal penalty of not more than $500,000 if convicted of knowingly--

(1) Employing a person under a prohibition specified in paragraph (b) of this clause; or

(2) Allowing such a person to serve on the board of directors of the Contractor or first-tier subcontractor.

(e) In addition to the criminal penalties contained in 10 U.S.C. 2408, the Government may consider other available remedies, such as--

(1) Suspension or debarment;

(2) Cancellation of the contract at no cost to the Government; or

(3) Termination of the contract for default.

(f) The Contractor may submit written requests for waiver of the prohibitions in paragraph (b) of this clause to the Contracting Officer. Requests shall clearly identify--

(1) The person involved;

(2) The nature of the conviction and resultant sentence or punishment

imposed;

(3) The reasons for the requested waiver; and,

(4) An explanation of why a waiver is in the interest of national security.

(g) The Contractor agrees to include the substance of this clause, appropriately modified to reflect the identity and relationship of the parties, in all first-tier subcontracts exceeding the simplified acquisition threshold in Part 2 of the Federal Acquisition Regulation, except those for commercial items or components.

(h) Pursuant to 10 U.S.C. 2408(c), defense contractors and subcontractors may obtain information as to whether a particular person has been convicted of fraud or any other felony arising out of a contract with the DoD by contacting The Office of Justice Programs, The Denial of Benefits Office, U.S. Department of Justice, telephone (202) 616-3507.

(End of clause)

12 52.203-7002 DISPLAY OF DOD HOTLINE POSTER (DEC 1991)

(a) The Contractor shall display prominently in common work areas within business segments performing work under Department of Defense (DoD) contracts, DoD Hotline Posters prepared by the DoD Office of the Inspector General.

(b) DoD Hotline Posters may be obtained from the DoD Inspector General, ATTN: Defense Hotline, 400 Army Navy Drive, Washington, DC 22202-2884.

(c) The Contractor need not comply with paragraph (a) of this clause if it has established a mechanism, such as a hotline, by which employees may report suspected instances of improper conduct, and instructions that encourage employees to make such reports.

(End of clause)

13 52.204-4 PRINTING/COPYING DOUBLE-SIDED ON RECYCLED PAPER (JUN 1996)

(a) In accordance with Executive Order 12873, dated October 20, 1993, as amended by Executive Order 12995, dated March 25, 1996, the Offeror/Contractor is encouraged to submit paper documents, such as offers, letters, or reports, that are printed/copied double-sided on recycled paper that has at least 20 percent postconsumer material.

(b) The 20 percent standard applies to high-speed copier paper, offset paper, forms bond, computer printout paper, carbonless paper, file folders, white woven envelopes, and other uncoated printed and writing paper, such as writing and office paper, book paper, cotton fiber paper, and cover stock. An alternative to meeting the 20 percent postconsumer material standard is 50 percent recovered material content of certain industrial by-products.

(End of clause)

14 52.204-7003 CONTROL OF GOVERNMENT PERSONNEL WORK PRODUCT (APR 1992)

The Contractor's procedures for protecting against unauthorized disclosure of information shall not require Department of Defense employees or members of the Armed Forces to relinquish control of their work products, whether classified or not, to the Contractor.

(End of clause)

15 52.209-6 PROTECTING THE GOVERNMENT'S INTEREST WHEN SUBCONTRACTING WITH CONTRACTORS DEBARRED, SUSPENDED, OR PROPOSED FOR DEBARMENT (JUL 1995)

(a) The Government suspends or debars Contractors to protect the Government's interest. The Contractor shall not enter into any subcontract in excess of $25,000 with a Contractor that is debarred, suspended, or proposed for debarment unless there is a compelling reason to do so.

(b) The Contractor shall require each proposed first-tier subcontractor, whose subcontract will exceed $25,000, to disclose to the Contractor, in writing, whether as of the time of award of the subcontract, the subcontractor, or its principals, is or is not debarred, suspended, or proposed for debarment by the Federal Government.

(c) A corporate officer or a designee of the Contractor shall notify the Contracting Officer, in writing, before entering into a subcontract with a party that is debarred, suspended, or proposed for debarment (see FAR 9.404 for information on the List of Parties Excluded from Federal Procurement and Nonprocurement Programs). The notice must include the following:

(1) The name of the subcontractor.

(2) The Contractor's knowledge of the reasons for the subcontractor being on the List of Parties Excluded from Federal Procurement and Nonprocurement Programs.

(3) The compelling reason(s) for doing business with the subcontractor notwithstanding its inclusion on the List of Parties Excluded from Federal Procurement and Nonprocurement Programs.

(4) The systems and procedures the Contractor has established to ensure that it is fully protecting the Government's interests when dealing with such subcontractor in view of the specific basis for the party's debarment, suspension, or proposed debarment.

(End of clause)

16 52.209-7004 SUBCONTRACTING WITH FIRMS THAT ARE OWNED OR CONTROLLED BY THE GOVERNMENT OF A TERRORIST COUNTRY (MAR 1998)

(a) Unless the Government determines that there is a compelling reason to do so, the Contractor shall not enter into any subcontract in excess of $25,000 with a firm, or a subsidiary of a firm, that is identified, on the List of Parties Excluded from Federal Procurement and Nonprocurement Programs, as being ineligible for the award of Defense contracts or subcontracts because it is owned or controlled by the government of a terrorist country.

(b) A corporate officer or a designee of the Contractor shall notify the Contracting Officer, in writing, before entering into a subcontract with a party that is identified, on the List of Parties Excluded from Federal Procurement and Nonprocurement Programs, as being ineligible for the award of Defense contracts or subcontracts because it is owned or controlled by the government of a terrorist country. The notice must include the name of the proposed subcontractor and the compelling reason(s) for doing business with the subcontractor notwithstanding its inclusion on the List of Parties Excluded From Federal Procurement and Nonprocurement Programs.

(End of clause)

17 52.211-18 VARIATION IN ESTIMATED QUANTITY (APR 1984)

If the quantity of a unit-priced item in this contract is an estimated quantity and the actual quantity of the unit-priced item varies more than 15 percent above or below the estimated quantity, an equitable adjustment in the contract price shall be made upon demand of either party. The equitable adjustment shall be based upon any increase or decrease in costs due solely to the variation above 115 percent or below 85 percent of the estimated quantity. If the quantity variation is such as to cause an increase in the time necessary for completion, the Contractor may request, in writing, an extension of time, to be received by the Contracting Officer within 10 days from the beginning of the delay, or within such further period as may be granted by the Contracting Officer before the date of final settlement of the contract. Upon the receipt of a written request for an extension, the Contracting Officer shall ascertain the facts and make an adjustment for extending the completion date as, in the judgement of the Contracting Officer, is justified.

(End of clause)

18 52.214-26 AUDIT AND RECORDS--SEALED BIDDING (OCT 1997)

(a) As used in this clause, records includes books, documents, accounting procedures and practices, and other data, regardless of type and regardless of whether such items are in written form, in the form of computer data, or in any other form.

(b) Cost or pricing data. If the Contractor has been required to submit cost or pricing data in connection with the pricing of any modification to this contract, the Contracting Officer, or an authorized representative of the Contracting Officer, in order to evaluate the accuracy, completeness, and currency of the cost or pricing data, shall have the right to examine and audit all of the Contractor's records, including computations and projections, related to--

(1) The proposal for the modification;

(2) The discussions conducted on the proposal(s), including those related to negotiating;

(3) Pricing of the modification; or

(4) Performance of the modification.

(c) Comptroller General. In the case of pricing any modification, the Comptroller General of the United States, or an authorized representative, shall have the same rights as specified in paragraph (b) of this clause.

(d) Availability. The Contractor shall make available at its office at all reasonable times the materials described in reproduction, until 3 years after final payment under this contract, or for any other period specified in Subpart 4.7 of the Federal Acquisition Regulation (FAR). FAR Subpart 4.7, Contractor Records Retention, in effect on the data of this contract, is incorporated by reference in its entirety and made a part of this contract.

(1) If this contract is completely or partially terminated, the records relating to the work terminated shall be made available for 3 years after any resulting final termination settlement.

(2) Records pertaining to appeals under the Disputes clause or to litigation or the settlement of claims arising under or relating to the performance of this contract shall be made available until disposition of

such appeals, litigation, or claims.

(e) The Contractor shall insert a clause containing all the provisions of this clause, including this paragraph (e), in all subcontracts expected to exceed the threshold in FAR 15.403-4(a)(1) for submission of cost or pricing data.

(End of clause)

19 52.214-27 PRICE REDUCTION FOR DEFECTIVE COST OR PRICING DATA-MODIFICATIONS--SEALED BIDDING (OCT 1997)

(a) This clause shall become operative only for any modification to this contract involving aggregate increases and/or decreases in costs, plus applicable profits, expected to exceed the threshold for the submission of cost or pricing data at FAR 15.403-4(a)(1), except that this clause does not apply to a modification if an exception under FAR 15.403-1(b) applies.

(b) If any price, including profit, negotiated in connection with any modification under this clause, was increased by any significant amount because (1) the Contractor or a subcontractor furnished cost or pricing data that were not complete, accurate, and current as certified in its Certificate of Current Cost or Pricing Data, (2) a subcontractor or prospective subcontractor furnished the Contractor cost or pricing data that were not complete, accurate, and current as certified in the Contractor's Certificate of Current Cost or Pricing Data, or (3) any of these parties furnished data of any description that were not accurate, the price shall be reduced accordingly and the contract shall be modified to reflect the reduction. This right to a price reduction is limited to that resulting from defects in data relating to modifications for which this clause becomes operative under paragraph (a) above.

(c) Any reduction in the contract price under paragraph (b) above due to defective data from a prospective subcontractor that was not subsequently awarded the subcontract shall be limited to the amount, plus applicable overhead and profit markup, by which (1) the actual subcontract or (2) the actual cost to the Contractor, if there was no subcontract, was less than the prospective subcontract cost estimate submitted by the Contractor; provided, that the actual subcontract price was not itself affected by defective cost or pricing data.

(d)(1) If the Contracting Officer determines under paragraph (b) of this clause that a price or cost reduction should be made, the Contractor agrees not to raise the following matters as a defense:

(i) The Contractor or subcontractor was a sole source supplier or otherwise was in a superior bargaining position and thus the price of the contract would not have been modified even if accurate, complete, and current cost or pricing data had been submitted.

(ii) The Contracting Officer should have known that the cost or pricing data in issue were defective even though the Contractor or subcontractor took no affirmative action to bring the character of the data to the attention of the Contracting Officer.

(iii) The contract was based on an agreement about the total cost of the contract and there was no agreement about the cost of each item procured under the contract.

(iv) The Contractor or subcontractor did not submit a Certificate of Current Cost or Pricing Data.

(2)(i) Except as prohibited by subdivision (d)(2)(ii) of this clause, an offset in an amount determined appropriate by the Contracting Officer based upon the facts shall be allowed against the amount of a contract price reduction if--

(A) The Contractor certifies to the Contracting Officer that, to the best of the Contractor's knowledge and belief, the Contractor is entitled to the offset in the amount requested; and

(B) The Contractor proves that the cost or pricing data were available before the date of agreement on the price of the contract (or price of the modification) and that the data were not submitted before such date.

(ii) An offset shall not be allowed if--

(A) The understated data was known by the Contractor to be understated when the Certificate of Current Cost or Pricing Data was signed; or

(B) The Government proves that the facts demonstrate that the contract price would not have increased in the amount to be offset even if the available data had been submitted before the date of agreement on price.

(e) If any reduction in the contract price under this clause reduces the price of items for which payment was made prior to the date of the modification reflecting the price reduction, the Contractor shall be liable to and shall pay the United States at the time such overpayment is repaid--

(1) Simple interest on the amount of such overpayment to be computed from the date(s) of overpayment to the Contractor to the date the Government is repaid by the Contractor at the applicable underpayment rate effective for each quarter prescribed by the Secretary of the Treasury under 26 U.S.C. 6621(a)(2); and

(2) A penalty equal to the amount of the overpayment, if the Contractor or subcontractor knowingly submitted cost or pricing data which were incomplete, inaccurate, or noncurrent.

(End of clause)

20 52.214-28 SUBCONTRACTOR COST OR PRICING DATA--MODIFICATIONS--SEALED BIDDING (OCT 1997)

(a) The requirements of paragraphs (b) and (c) of this clause shall (1) become operative only for any modification to this contract involving aggregate increases and/or decreases in costs, plus applicable profits, expected to exceed the threshold for submission of cost or pricing data at FAR 15.403-4(a)(1), and (2) be limited to such modifications.

(b) Before awarding any subcontract expected to exceed the threshold for submission of cost or pricing data at FAR 15.403-4(a)(1), on the date of agreement on price or the date of award, whichever is later; or before pricing any subcontract modifications involving aggregate increases and/or decreases in costs, plus applicable profits, expected to exceed the threshold for submission of cost or pricing data at FAR 15.403-4(a)(1), the Contractor shall require the subcontractor to submit cost or pricing data (actually or by specific identification in writing), unless an exception under FAR 15.403-1(b) applies.

(c) The Contractor shall require the subcontractor to certify in substantially the form prescribed in subsection FAR 15.406-2 that, to the best of its knowledge and belief, the data submitted under paragraph (b) of this clause were accurate, complete, and current as of the date of agreement on the negotiated price of the subcontract or subcontract modification.

(d) The Contractor shall insert the substance of this clause, including this paragraph (d), in each subcontract that, when entered into, exceeds the threshold for submission of cost or pricing data at FAR 15.403-4(a)(1).

(End of clause)

21 52.214-29 ORDER OF PRECEDENCE--SEALED BIDDING (JAN 1986)

Any inconsistency in this solicitation or contract shall be resolved by giving precedence in the following order: (a) the Schedule (excluding the specifications); (b) representations and other instructions; (c) contract clauses; (d) other documents, exhibits, and attachments; and (e) the specifications.

(End of clause)

22 52.219-8 UTILIZATION OF SMALL BUSINESS CONCERNS (JAN 1999)

(a) It is the policy of the United States that small business concerns, HUBZone small business concerns, small business concerns owned and controlled by socially and economically disadvantaged individuals, and small business concerns owned and controlled by women shall have the maximum practicable opportunity to participate in performing contracts let by any Federal agency, including contracts and subcontracts for subsystems, assemblies, components, and related services for major systems. It is further the policy of the United States that its prime contractors establish procedures to ensure the timely payment of amounts due pursuant to the terms of their subcontracts with small business concerns, HUBZone small business concerns, small business concerns owned and controlled by socially and economically disadvantaged individuals, and small business concerns owned and controlled by women.

(b) The Contractor hereby agrees to carry out this policy in the awarding of subcontracts to the fullest extent consistent with efficient contract performance. The Contractor further agrees to cooperate in any studies or surveys as may be conducted by the United States Small Business Administration or the awarding agency of the United States as may be necessary to determine the extent of the Contractor's compliance with this clause.

(c) Definitions. As used in this contract

(1) Small business concern means a small business as defined pursuant to section 3 of the Small Business Act and relevant regulations promulgated pursuant thereto.

(2) HUBZone small business concern means a small business concern that appears on the List of Qualified HUBZone Small Business Concerns maintained by the Small Business Administration.

(3) Small business concern owned and controlled by socially and economically disadvantaged individuals means an offeror that represents, as part of its offer, that--

(i) It is a small business under the size standard applicable to the acquisition;

(ii) It has received certification as a small disadvantaged business concern consistent with 13 CFR part 124, Subpart B;

(iii) No material change in disadvantaged ownership and control has occurred since its certification;

(iv) Where the concern is owned by one or more individuals, the net worth of each individual upon whom the certification is based does not exceed $750,000 after taking into account the applicable exclusions set forth at 13 CFR 124.104(c)(2); and

(v) It is listed, on the date of its representation, on the

register of small disadvantaged business concerns maintained by the Small Business Administration.

(4) Small business concern owned and controlled by women means a small business concern--

(i) Which is at least 51 percent owned by one or more women, or, in the case of any publicly owned business, at least 51 percent of the stock of which is owned by one or more women; and

(ii) Whose management and daily business operations are controlled by one or more women; and

(d) Contractors acting in good faith may rely on written representations by their subcontractors regarding their status as a small business concern, a HUBZone small business concern, a small business concern owned and controlled by socially and economically disadvantaged individuals, or a small business concern owned and controlled by women.

(End of clause)

23 52.219-9 I SMALL BUSINESS SUBCONTRACTING PLAN (JAN 1999)--ALTERNATE I (JAN 1999)

(a) This clause does not apply to small business concerns.

(b) Definitions. As used in this clause--

Commercial item means a product or service that satisfies the definition of commercial item in section 2.101 of the Federal Acquisition Regulation.

Commercial plan means a subcontracting plan (including goals) that covers the offeror's fiscal year and that applies to the entire production of commercial items sold by either the entire company or a portion thereof (e.g., division, plant, or product line).

Individual contract plan means a subcontracting plan that covers the entire contract period (including option periods), applies to a specific contract, and has goals that are based on the offeror's planned subcontracting in support of the specific contract, except that indirect costs incurred for common or joint purposes may be allocated on a prorated basis to the contract.

Master plans means a subcontracting plan that contains all the required elements of an individual contract plan, except goals, and may be incorporated into individual contract plans, provided the master plan has been approved.

Subcontract means any agreement (other than one involving an employer-employee relationship) entered into by a Federal Government prime Contractor or subcontractor calling for supplies or services required for performance of the contract or subcontract.

(c) The apparent low bidder, upon request by the Contracting Officer, shall submit a subcontracting plan, where applicable, that separately addresses subcontracting with small business, HUBZone small business, small disadvantaged business, and women-owned small business concerns. If the bidder is submitting an individual contract plan, the plan must separately address subcontracting with small business, HUBZone small business, small disadvantaged business, and women-owned small business concerns, with a separate part for the basic contract and separate parts for each option (if any). The plan shall be included in and made a part of the resultant contract. The subcontracting plan shall be submitted within the time specified by the Contracting Officer. Failure to submit the

subcontracting plan shall make the bidder ineligible for the award of a contract.

(d) The offeror's subcontracting plan shall include the following:

(1) Goals, expressed in terms of percentages of total planned subcontracting dollars, for the use of small business, HUBZone small business, small disadvantaged business, and women-owned small business concerns as subcontractors. The offeror shall include all subcontracts that contribute to contract performance, and may include a proportionate share of products and services that are normally allocated as indirect costs.

(2) A statement of--

(i) Total dollars planned to be subcontracted for an individual contract plan; or the offeror's total projected sales, expressed in dollars, and the total value of projected subcontracts to support the sales for a commercial plan;

(ii) Total dollars planned to be subcontracted to small business concerns;

(iii) Total dollars planned to be subcontracted to HUBZone small business concerns;

(iv) Total dollars planned to be subcontracted to small disadvantaged business concerns; and

(v) Total dollars planned to be subcontracted to women-owned small business concerns.

(3) A description of the principal types of supplies and services to be subcontracted, and an identification of the types planned for subcontracting to--

(i) Small business concerns;

(ii) HUBZone small business concerns;

(iii) Small disadvantaged business concerns; and

(iv) Women-owned small business concerns.

(4) A description of the method used to develop the subcontracting goals in paragraph (d)(1) of this clause.

(5) A description of the method used to identify potential sources for solicitation purposes (e.g., existing company source lists, the Procurement Marketing and Access Network (PRO-Net) of the Small Business Administration (SBA), the list of certified small disadvantaged business concerns of the SBA, the National Minority Purchasing Council Vendor Information Service, the Research and Information Division of the Minority Business Development Agency in the Department of Commerce, or small, HUBZone small, small disadvantaged, and women-owned small business trade associations). A firm may rely on the information contained in PRO-Net as an accurate representation of a concern's size and ownership characteristics for the purposes of maintaining a small and women-owned small business source list. A firm shall rely on the information contained in SBA's list of small disadvantaged business concerns as an accurate representation of a concern's size and ownership characteristics for the purposes of maintaining a small disadvantaged business source list. Use of PRO-Net and/or the SBA list of small disadvantaged business concerns as its source lists does not relieve a firm of its responsibilities (e.g., outreach, assistance, counseling, publicizing subcontracting opportunities) in this clause.

(6) A statement as to whether or not the offeror included indirect costs in establishing subcontracting goals, and a description of the method used to determine the proportionate share of indirect costs to be incurred with--

(i) Small business concerns;

(ii) HUBZone small business concerns;
(iii) Small disadvantaged business concerns; and
(iv) Women-owned small business concerns.

(7) The name of the individual employed by the offeror who will administer the offeror's subcontracting program, and a description of the duties of the individual.

(8) A description of the efforts the offeror will make to assure that small business, HUBZone small business, small disadvantaged business, and women-owned small business concerns have an equitable opportunity to compete for subcontracts.

(9) Assurances that the offeror will include the clause of this contract entitled "Utilization of Small Business Concerns" in all subcontracts that offer further subcontracting opportunities, and that the offeror will require all subcontractors (except small business concerns) that receive subcontracts in excess of $500,000 ($1,000,000 for construction of any public facility) to adopt a subcontracting plan that complies with the requirements of this clause.

(10) Assurances that the offeror will--
(i) Cooperate in any studies or surveys as may be required;
(ii) Submit periodic reports so that the Government can determine the extent of compliance by the offeror with the subcontracting plan;
(iii) Submit Standard Form (SF) 294, Subcontracting Report for Individual Contracts, and/or SF 295, Summary Subcontract Report, in accordance with the instructions on the forms or as provided in agency regulations and in paragraph (j) of this clause; and
(iv) Ensure that its subcontractors agree to submit SF 294 and SF 295.

(11) A description of the types of records that will be maintained concerning procedures that have been adopted to comply with the requirements and goals in the plan, including establishing source lists; and a description of the offeror's efforts to locate small business, HUBZone small business, small disadvantaged business, and women-owned small business concerns and award subcontracts to them. The records shall include at least the following (on a plant-wide or company-wide basis, unless otherwise indicated):
(i) Source lists (e.g., PRO-Net), guides, and other data that identify small business, HUBZone small business, small disadvantaged business, and women-owned small business concerns.
(ii) Organizations contacted in an attempt to locate sources that are small business, HUBZone small business, small disadvantaged business, or women-owned small business concerns.
(iii) Records on each subcontract solicitation resulting in an award of more than $100,000, indicating--
(A) Whether small business concerns were solicited and, if not, why not;
(B) Whether HUBZone small business concerns were solicited and, if not, why not;
(C) Whether small disadvantaged business concerns were solicited and, if not, why not;
(D) Whether women-owned small business concerns were solicited and, if not, why not; and
(E) If applicable, the reason award was not made to a small business concern.
(iv) Records of any outreach efforts to contact--

(A) Trade associations;
(B) Business development organizations; and
(C) Conferences and trade fairs to locate small, HUBZone small, small disadvantaged, and women-owned small business sources.
(v) Records of internal guidance and encouragement provided to buyers through--
(A) Workshops, seminars, training, etc.; and
(B) Monitoring performance to evaluate compliance with the program's requirements.
(vi) On a contract-by-contract basis, records to support award data submitted by the offeror to the Government, including the name, address, and business size of each subcontractor. Contractors having commercial plans need not comply with this requirement.

(e) In order to effectively implement this plan to the extent consistent with efficient contract performance, the Contractor shall perform the following functions:

(1) Assist small business, HUBZone small business, small disadvantaged business, and women-owned small business concerns by arranging solicitations, time for the preparation of bids, quantities, specifications, and delivery schedules so as to facilitate the participation by such concerns. Where the Contractor's lists of potential small business, HUBZone small business, small disadvantaged business, and women-owned small business subcontractors are excessively long, reasonable effort shall be made to give all such small business concerns an opportunity to compete over a period of time.

(2) Provide adequate and timely consideration of the potentialities of small business, HUBZone small business, small disadvantaged business, and women-owned small business concerns in all "make-or-buy" decisions.

(3) Counsel and discuss subcontracting opportunities with representatives of small business, HUBZone small business, small disadvantaged business, and women-owned small business firms.

(4) Provide notice to subcontractors concerning penalties and remedies for misrepresentations of business status as small, HUBZone small, small disadvantaged, or women-owned small business for the purpose of obtaining a subcontract that is to be included as part or all of a goal contained in the Contractor's subcontracting plan.

(f) A master plan on a plant or division-wide basis that contains all the elements required by paragraph (d) of this clause, except goals, may be incorporated by reference as a part of the subcontracting plan required of the offeror by this clause; provided--(1) the master plan has been approved, (2) the offeror ensures that the master plan is updated as necessary and provides copies of the approved master plan, including evidence of its approval, to the Contracting Officer, and (3) goals and any deviations from the master plan deemed necessary by the Contracting Officer to satisfy the requirements of this contract are set forth in the individual subcontracting plan.

(g) A commercial plan is the preferred type of subcontracting plan for contractors furnishing commercial items. The commercial plan shall relate to the offeror's planned subcontracting generally, for both commercial and Government business, rather than solely to the Government contract. Commercial plans are also preferred for subcontractors that provide commercial items under a prime contract, whether or not the prime contractor is supplying a commercial item.

(h) Prior compliance of the offeror with other such subcontracting plans under previous contracts will be considered by the Contracting Officer in

determining the responsibility of the offeror for award of the contract.

(i) The failure of the Contractor or subcontractor to comply in good faith with (1) the clause of this contract entitled "Utilization Of Small Business Concerns," or (2) an approved plan required by this clause, shall be a material breach of the contract.

(j) The Contractor shall submit the following reports:

(1) Standard Form 294, Subcontracting Report for Individual Contracts. This report shall be submitted to the Contracting Officer semiannually and at contract completion. The report covers subcontract award data related to this contract. This report is not required for commercial plans.

(2) Standard Form 295, Summary Subcontract Report. This report encompasses all the contracts with the awarding agency. It must be submitted semi-annually for contracts with the Department of Defense and annually for contracts with civilian agencies. If the reporting activity is covered by a commercial plan, the reporting activity must report annually all subcontract awards under that plan. All reports submitted at the close of each fiscal year (both individual and commercial plans) shall include a breakout, in the Contractor's format, of subcontract awards, in whole dollars, to small disadvantaged business concerns by Standard Industrial Classification (SIC) Major Group. For a commercial plan, the Contractor may obtain from each of its subcontractors a predominant SIC Major Group and report all awards to that subcontractor under its predominant SIC Major Group.

(End of clause)

24 52.219-14 LIMITATIONS ON SUBCONTRACTING (DEC 1996)

(a) This clause does not apply to the unrestricted portion of a partial set-aside.

(b) By submission of an offer and execution of a contract, the Offeror/Contractor agrees that in performance of the contract in the case of a contract for--

(1) Services (except construction). At least 50 percent of the cost of contract performance incurred for personnel shall be expended for employees of the concern.

(2) Supplies (other than procurement from a nonmanufacturer of such supplies). The concern shall perform work for at least 50 percent of the cost of manufacturing the supplies, not including the cost of materials.

(3) General construction. The concern will perform at least 15 percent of the cost of the contract, not including the cost of materials, with its own employees.

(4) Construction by special trade contractors. The concern will perform at least 25 percent of the cost of the contract, not including the cost of materials, with its own employees.

(End of clause)

25 52.219-16 LIQUIDATED DAMAGES--SUBCONTRACTING PLAN (JAN 1999)

(a) "Failure to make a good faith effort to comply with the subcontracting plan," as used in this clause, means a willful or intentional failure to perform in accordance with the requirements of the subcontracting plan approved under the clause in this contract entitled "Small Business Subcontracting Plan," or willful or intentional action to frustrate the plan.

(b) Performance shall be measured by applying the percentage goals to the total actual subcontracting dollars or, if a commercial plan is involved, to the pro rata share of actual subcontracting dollars attributable to Government contracts covered by the commercial plan. If, at contract completion or, in the case of a commercial plan, at the close of the fiscal year for which the plan is applicable, the Contractor has failed to meet its subcontracting goals and the Contracting Officer decides in accordance with paragraph (c) of this clause that the Contractor failed to make a good faith effort to comply with its subcontracting plan, established in accordance with the clause in this contract entitled "Small Business Subcontracting Plan," the Contractor shall pay the Government liquidated damages in an amount stated. The amount of probable damages attributable to the Contractor's failure to comply shall be an amount equal to the actual dollar amount by which the Contractor failed to achieve each subcontract goal.

(c) Before the Contracting Officer makes a final decision that the Contractor has failed to make such good faith effort, the Contracting Officer shall give the Contractor written notice specifying the failure and permitting the Contractor to demonstrate what good faith efforts have been made and to discuss the matter. Failure to respond to the notice may be taken as an admission that no valid explanation exists. If, after consideration of all the pertinent data, the Contracting Officer finds that the Contractor failed to make a good faith effort to comply with the subcontracting plan, the Contracting Officer shall issue a final decision to that effect and require that the Contractor pay the Government liquidated damages as provided in paragraph (b) of this clause.

(d) With respect to commercial plans, the Contracting Officer who approved the plan will perform the functions of the Contracting Officer under this clause on behalf of all agencies with contracts covered by the commercial plan.

(e) The Contractor shall have the right of appeal, under the clause in this contract entitled, Disputes, from any final decision of the Contracting Officer.

(f) Liquidated damages shall be in addition to any other remedies that the Government may have.

(End of clause)

26 52.222-3 CONVICT LABOR (AUG 1996)

The Contractor agrees not to employ in the performance of this contract any person undergoing a sentence of imprisonment which has been imposed by any court of a State, the District of Columbia, the Commonwealth of Puerto Rico, the Virgin Islands, Guam, American Samoa, the Commonwealth of the Northern Mariana Islands, or the Trust Territory of the Pacific Islands. This limitation, however, shall not prohibit the employment by the Contractor in the performance of this contract of persons on parole or

probation to work at paid employment during the term of their sentence or persons who have been pardoned or who have served their terms. Nor shall it prohibit the employment by the Contractor in the performance of this contract of persons confined for violation of the laws of any of the States, the District of Columbia, the Commonwealth of Puerto Rico, the Virgin Islands, Guam, American Samoa, the Commonwealth of the Northern Mariana Islands, or the Trust Territory of the Pacific Islands who are authorized to work at paid employment in the community under the laws of such jurisdiction, if--

(a)(1) The worker is paid or is in an approved work training program on a voluntary basis;

(2) Representatives of local union central bodies or similar labor union organizations have been consulted;

(3) Such paid employment will not result in the displacement of employed workers, or be applied in skills, crafts, or trades in which there is a surplus of available gainful labor in the locality, or impair existing contracts for services; and

(4) The rates of pay and other conditions of employment will not be less than those paid or provided for work of a similar nature in the locality in which the work is being performed; and

(b) The Attorney General of the United States has certified that the work-release laws or regulations of the jurisdiction involved are in conformity with the requirements of Executive Order 11755, as amended by Executive Orders 12608 and 12943.

(End of clause)

27 52.222-4 CONTRACT WORK HOURS AND SAFETY STANDARDS ACT-OVERTIME COMPENSATION (JUL 1995)

(a) Overtime requirements. No Contractor or subcontractor contracting for any part of the contract work which may require or involve the employment of laborers or mechanics (see Federal Acquisition Regulation (FAR) 22.300) shall require or permit any such laborers or mechanics in any workweek in which the individual is employed on such work to work in excess of 40 hours in such workweek unless such laborer or mechanic receives compensation at a rate not less than 1 1/2 times the basic rate of pay for all hours worked in excess of 40 hours in such workweek.

(b) Violation; liability for unpaid wages; liquidated damages. In the event of any violation of the provisions set forth in paragraph (a) of this clause, the Contractor and any subcontractor responsible therefor shall be liable for the unpaid wages. In addition, such Contractor and subcontractor shall be liable to the United States (in the case of work done under contract for the District of Columbia or a territory, to such District or to such territory), for liquidated damages. Such liquidated damages shall be computed with respect to each individual laborer or mechanic employed in violation of the provisions set forth in paragraph (a) of this clause in the sum of $10 for each calendar day on which such individual was required or permitted to work in excess of the standard workweek of 40 hours without payment of the overtime wages required by provisions set forth in paragraph (a) of this clause.

(c) Withholding for unpaid wages and liquidated damages. The Contracting Officer shall upon his or her own action or upon written request of an authorized representative of the Department of Labor withhold or cause to be withheld, from any moneys payable on account of work performed by the Contractor or subcontractor under any such contract or any other Federal contract with the same Prime Contractor, or any other Federally-assisted

contract subject to the Contract Work Hours and Safety Standards Act which is held by the same Prime Contractor, such sums as may be determined to be necessary to satisfy any liabilities of such Contractor or subcontractor for unpaid wages and liquidated damages as provided in the provisions set forth in paragraph (b) of this clause.

(d) Payrolls and basic records. (1) The Contractor or subcontractor shall maintain payrolls and basic payroll records during the course of contract work and shall preserve them for a period of 3 years from the completion of the contract for all laborers and mechanics working on the contract. Such records shall contain the name and address of each such employee, social security number, correct classifications, hourly rates of wages paid, daily and weekly number of hours worked, deductions made, and actual wages paid. Nothing in this paragraph shall require the duplication of records required to be maintained for construction work by Department of Labor regulations at 29 CFR 5.5(a)(3) implementing the Davis-Bacon Act.

(2) The records to be maintained under paragraph (d)(1) of this clause shall be made available by the Contractor or subcontractor for inspection, copying, or transcription by authorized representatives of the Contracting Officer or the Department of Labor. The Contractor or subcontractor shall permit such representatives to interview employees during working hours on the job.

(e) Subcontracts. The Contractor or subcontractor shall insert in any subcontracts exceeding $100,000, the provisions set forth in paragraphs (a) through (e) of this clause and also a clause requiring the subcontractors to include these provisions in any lower tier subcontracts. The Prime Contractor shall be responsible for compliance by any subcontractor or lower tier subcontractor with the provisions set forth in paragraphs (a) through (e) of this clause.

(End of clause)

28 52.222-6 DAVIS-BACON ACT (FEB 1995)

(a) All laborers and mechanics employed or working upon the site of the work will be paid unconditionally and not less often than once a week, and without subsequent deduction or rebate on any account (except such payroll deductions as are permitted by regulations issued by the Secretary of Labor under the Copeland Act (29 CFR Part 3)), the full amount of wages and bona fide fringe benefits (or cash equivalents thereof) due at time of payment computed at rates not less than those contained in the wage determination of the Secretary of Labor which is attached hereto and made a part hereof, regardless of any contractual relationship which may be alleged to exist between the Contractor and such laborers and mechanics. Contributions made or costs reasonably anticipated for bona fide fringe benefits under section 1(b)(2) of the Davis-Bacon Act on behalf of laborers or mechanics are considered wages paid to such laborers or mechanics, subject to the provisions of paragraph (d) of this clause; also, regular contributions made or costs incurred for more than a weekly period (but not less often than quarterly) under plans, funds, or programs which cover the particular weekly period, are deemed to be constructively made or incurred during such period. Such laborers and mechanics shall be paid not less than the appropriate wage rate and fringe benefits in the wage determination for the classification of work actually performed, without regard to skill, except as provided in the clause entitled Apprentices and Trainees. Laborers or mechanics performing work in more than one classification may be compensated at the rate specified for each classification for the time actually worked therein; provided, that the employer's payroll records

accurately set forth the time spent in each classification in which work is performed. The wage determination (including any additional classifications and wage rates conformed under paragraph (b) of this clause) and the Davis-Bacon poster (WH-1321) shall be posted at all times by the Contractor and its subcontractors at the site of the work in a prominent and accessible place where it can be easily seen by the workers.

(b)(1) The Contracting Officer shall require that any class of laborers or mechanics which is not listed in the wage determination and which is to be employed under the contract shall be classified in conformance with the wage determination. The Contracting Officer shall approve an additional classification and wage rate and fringe benefits therefor only when all the following criteria have been met:

(i) The work to be performed by the classification requested is not performed by a classification in the wage determination.

(ii) The classification is utilized in the area by the construction industry.

(iii) The proposed wage rate, including any bona fide fringe benefits, bears a reasonable relationship to the wage rates contained in the wage determination.

(iv) With respect to helpers, such a classification prevails in the area in which the work is performed.

(2) If the Contractor and the laborers and mechanics to be employed in the classification (if known), or their representatives, and the Contracting Officer agree on the classification and wage rate (including the amount designated for fringe benefits, where appropriate), a report of the action taken shall be sent by the Contracting Officer to the Administrator of the Wage and Hour Division, Employment Standards Administration, U.S. Department of Labor, Washington, DC 20210. The Administrator or an authorized representative will approve, modify, or disapprove every additional classification action within 30 days of receipt and so advise the Contracting Officer or will notify the Contracting Officer within the 30-day period that additional time is necessary.

(3) In the event the Contractor, the laborers or mechanics to be employed in the classification, or their representatives, and the Contracting Officer do not agree on the proposed classification and wage rate (including the amount designated for fringe benefits, where appropriate), the Contracting Officer shall refer the questions, including the views of all interested parties and the recommendation of the Contracting Officer, to the Administrator of the Wage and Hour Division for determination. The Administrator, or an authorized representative, will issue a determination within 30 days of receipt and so advise the Contracting Officer or will notify the Contracting Officer within the 30-day period that additional time is necessary.

(4) The wage rate (including fringe benefits, where appropriate) determined pursuant to subparagraphs (b)(2) and (b)(3) of this clause shall be paid to all workers performing work in the classification under this contract from the first day on which work is performed in the classification.

(c) Whenever the minimum wage rate prescribed in the contract for a class of laborers or mechanics includes a fringe benefit which is not expressed as an hourly rate, the Contractor shall either pay the benefit as stated in the wage determination or shall pay another bona fide fringe benefit or an hourly cash equivalent thereof.

(d) If the Contractor does not make payments to a trustee or other third person, the Contractor may consider as part of the wages of any laborer or mechanic the amount of any costs reasonably anticipated in providing bona

fide fringe benefits under a plan or program; provided, that the Secretary of Labor has found, upon the written request of the Contractor, that the applicable standards of the Davis-Bacon Act have been met. The Secretary of Labor may require the Contractor to set aside in a separate account assets for the meeting of obligations under the plan or program.

(End of clause)

29 52.222-7 WITHHOLDING OF FUNDS (FEB 1988)

The Contracting Officer shall, upon his or her own action or upon written request of an authorized representative of the Department of Labor, withhold or cause to be withheld from the Contractor under this contract or any other Federal contract with the same Prime Contractor, or any other Federally assisted contract subject to Davis-Bacon prevailing wage requirements, which is held by the same Prime Contractor, so much of the accrued payments or advances as may be considered necessary to pay laborers and mechanics, including apprentices, trainees, and helpers, employed by the Contractor or any subcontractor the full amount of wages required by the contract. In the event of failure to pay any laborer or mechanic, including any apprentice, trainee, or helper, employed or working on the site of the work, all or part of the wages required by the contract, the Contracting Officer may, after written notice to the Contractor, take such action as may be necessary to cause the suspension of any further payment, advance, or guarantee of funds until such violations have ceased.

(End of clause)

30 52.222-8 PAYROLLS AND BASIC RECORDS (FEB 1988)

(a) Payrolls and basic records relating thereto shall be maintained by the Contractor during the course of the work and preserved for a period of 3 years thereafter for all laborers and mechanics working at the site of the work. Such records shall contain the name, address, and social security number of each such worker, his or her correct classification, hourly rates of wages paid (including rates of contributions or costs anticipated for bona fide fringe benefits or cash equivalents thereof of the types described in section 1(b)(2)(B) of the Davis-Bacon Act), daily and weekly number of hours worked, deductions made, and actual wages paid. Whenever the Secretary of Labor has found, under paragraph (d) of the clause entitled Davis-Bacon Act, that the wages of any laborer or mechanic include the amount of any costs reasonably anticipated in providing benefits under a plan or program described in section 1(b)(2)(B) of the Davis-Bacon Act, the Contractor shall maintain records which show that the commitment to provide such benefits is enforceable, that the plan or program is financially responsible, and that the plan or program has been communicated in writing to the laborers or mechanics affected, and records which show the costs anticipated or the actual cost incurred in providing such benefits. Contractors employing apprentices or trainees under approved programs shall maintain written evidence of the registration of apprenticeship programs and certification of trainee programs, the registration of apprentices and trainees, and the ratios and wage rates prescribed in the applicable programs.

(b)(1) The Contractor shall submit weekly for each week in which any contract work is performed a copy of all payrolls to the Contracting Officer. The payrolls submitted shall set out accurately and completely all of the information required to be maintained under paragraph (a) of

this clause. This information may be submitted in any form desired. Optional Form WH-347 (Federal Stock Number 029-005-00014-1) is available for this purpose and may be purchased from the Superintendent of Documents, U.S. Government Printing Office, Washington, DC 20402. The Prime Contractor is responsible for the submission of copies of payrolls by all subcontractors.

(2) Each payroll submitted shall be accompanied by a "Statement of Compliance," signed by the Contractor or subcontractor or his or her agent who pays or supervises the payment of the persons employed under the contract and shall certify--

(i) That the payroll for the payroll period contains the information required to be maintained under paragraph (a) of this clause and that such information is correct and complete;

(ii) That each laborer or mechanic (including each helper, apprentice, and trainee) employed on the contract during the payroll period has been paid the full weekly wages earned, without rebate, either directly or indirectly, and that no deductions have been made either directly or indirectly from the full wages earned, other than permissible deductions as set forth in the Regulations, 29 CFR Part 3; and

(iii) That each laborer or mechanic has been paid not less than the applicable wage rates and fringe benefits or cash equivalents for the classification of work performed, as specified in the applicable wage determination incorporated into the contract.

(3) The weekly submission of a properly executed certification set forth on the reverse side of Optional Form WH-347 shall satisfy the requirement for submission of the "Statement of Compliance" required by subparagraph (b)(2) of this clause.

(4) The falsification of any of the certifications in this clause may subject the Contractor or subcontractor to civil or criminal prosecution under Section 1001 of Title 18 and Section 3729 of Title 31 of the United States Code.

(c) The Contractor or subcontractor shall make the records required under paragraph (a) of this clause available for inspection, copying, or transcription by the Contracting Officer or authorized representatives of the Contracting Officer or the Department of Labor. The Contractor or subcontractor shall permit the Contracting Officer or representatives of the Contracting Officer or the Department of Labor to interview employees during working hours on the job. If the Contractor or subcontractor fails to submit required records or to make them available, the Contracting Officer may, after written notice to the Contractor, take such action as may be necessary to cause the suspension of any further payment. Furthermore, failure to submit the required records upon request or to make such records available may be grounds for debarment action pursuant to 29 CFR 5.12.

(End of clause)

31 52.222-9 APPRENTICES AND TRAINEES (FEB 1988)

(a) Apprentices. Apprentices will be permitted to work at less than the predetermined rate for the work they performed when they are employed pursuant to and individually registered in a bona fide apprenticeship program registered with the U.S. Department of Labor, Employment and Training Administration, Bureau of Apprenticeship and Training, or with a State Apprenticeship Agency recognized by the Bureau, or if a person is employed in his or her first 90 days of probationary employment as an

apprentice in such an apprenticeship program, who is not individually registered in the program, but who has been certified by the Bureau of Apprenticeship and Training or a State Apprenticeship Agency (where appropriate) to be eligible for probationary employment as an apprentice. The allowable ratio of apprentices to journeymen on the job site in any craft classification shall not be greater than the ratio permitted to the Contractor as to the entire work force under the registered program. Any worker listed on a payroll at an apprentice wage rate, who is not registered or otherwise employed as stated in this paragraph, shall be paid not less than the applicable wage determination for the classification of work actually performed. In addition, any apprentice performing work on the job site in excess of the ratio permitted under the registered program shall be paid not less than the applicable wage rate on the wage determination for the work actually performed. Where a contractor is performing construction on a project in a locality other than that in which its program is registered, the ratios and wage rates (expressed in percentages of the journeyman's hourly rate) specified in the Contractor's or subcontractor's registered program shall be observed. Every apprentice must be paid at not less than the rate specified in the registered program for the apprentice's level of progress, expressed as a percentage of the journeyman hourly rate specified in the applicable wage determination. Apprentices shall be paid fringe benefits in accordance with the provisions of the apprenticeship program. If the apprenticeship program does not specify fringe benefits, apprentices must be paid the full amount of fringe benefits listed on the wage determination for the applicable classification. If the Administrator determines that a different practice prevails for the applicable apprentice classification, fringes shall be paid in accordance with that determination. In the event the Bureau of Apprenticeship and Training, or a State Apprenticeship Agency recognized by the Bureau, withdraws approval of an apprenticeship program, the Contractor will no longer be permitted to utilize apprentices at less than the applicable predetermined rate for the work performed until an acceptable program is approved.

(b) Trainees. Except as provided in 29 CFR 5.16, trainees will not be permitted to work at less than the predetermined rate for the work performed unless they are employed pursuant to and individually registered in a program which has received prior approval, evidenced by formal certification by the U.S. Department of Labor, Employment and Training Administration. The ratio of trainees to journeymen on the job site shall not be greater than permitted under the plan approved by the Employment and Training Administration. Every trainee must be paid at not less than the rate specified in the approved program for the trainee's level of progress, expressed as a percentage of the journeyman hourly rate specified in the applicable wage determination. Trainees shall be paid fringe benefits in accordance with the provisions of the trainee program. If the trainee program does not mention fringe benefits, trainees shall be paid the full amount of fringe benefits listed in the wage determination unless the Administrator of the Wage and Hour Division determines that there is an apprenticeship program associated with the corresponding journeyman wage rate in the wage determination which provides for less than full fringe benefits for apprentices. Any employee listed on the payroll at a trainee rate who is not registered and participating in a training plan approved by the Employment and Training Administration shall be paid not less than the applicable wage rate in the wage determination for the classification of work actually performed. In addition, any trainee performing work on the job site in excess of the ratio permitted under the registered program shall be paid not less than the applicable wage rate in the wage

determination for the work actually performed. In the event the Employment and Training Administration withdraws approval of a training program, the Contractor will no longer be permitted to utilize trainees at less than the applicable predetermined rate for the work performed until an acceptable program is approved.

(c) Equal employment opportunity. The utilization of apprentices, trainees, and journeymen under this clause shall be in conformity with the equal employment opportunity requirements of Executive Order 11246, as amended, and 29 CFR Part 30.

(End of clause)

32 52.222-10 COMPLIANCE WITH COPELAND ACT REQUIREMENTS (FEB 1988)

The Contractor shall comply with the requirements of 29 CFR Part 3, which are hereby incorporated by reference in this contract.

(End of clause)

33 52.222-11 SUBCONTRACTS (LABOR STANDARDS) (FEB 1988)

(a) The Contractor or subcontractor shall insert in any subcontracts the clauses entitled Davis-Bacon Act, Contract Work Hours and Safety Standards Act--Overtime Compensation, Apprentices and Trainees, Payrolls and Basic Records, Compliance with Copeland Act Requirements, Withholding of Funds, Subcontracts (Labor Standards), Contract Termination--Debarment, Disputes Concerning Labor Standards, Compliance with Davis-Bacon and Related Act Regulations, and Certification of Eligibility, and such other clauses as the Contracting Officer may, by appropriate instructions, require, and also a clause requiring subcontractors to include these clauses in any lower tier subcontracts. The Prime Contractor shall be responsible for compliance by any subcontractor or lower tier subcontractor with all the contract clauses cited in this paragraph.

(b)(1) Within 14 days after award of the contract, the Contractor shall deliver to the Contracting Officer a completed Statement and Acknowledgment Form (SF 1413) for each subcontract, including the subcontractor's signed and dated acknowledgment that the clauses set forth in paragraph (a) of this clause have been included in the subcontract.

(2) Within 14 days after the award of any subsequently awarded subcontract the Contractor shall deliver to the Contracting Officer an updated completed SF 1413 for such additional subcontract.

(End of clause)

34 52.222-12 CONTRACT TERMINATION--DEBARMENT (FEB 1988)

A breach of the contract clauses entitled Davis-Bacon Act, Contract Work Hours and Safety Standards Act--Overtime Compensation, Apprentices and Trainees, Payrolls and Basic Records, Compliance with Copeland Act Requirements, Subcontracts (Labor Standards), Compliance with Davis-Bacon and Related Act Regulations, or Certification of Eligibility may be grounds for termination of the contract, and for debarment as a Contractor and subcontractor as provided in 29 CFR 5.12.

(End of clause)

35 52.222-13 COMPLIANCE WITH DAVIS-BACON AND RELATED ACT REGULATIONS (FEB 1988)

All rulings and interpretations of the Davis-Bacon and Related Acts contained in 29 CFR Parts 1, 3, and 5 are hereby incorporated by reference in this contract.

(End of clause)

36 52.222-14 DISPUTES CONCERNING LABOR STANDARDS (FEB 1988)

The United States Department of Labor has set forth in 29 CFR Parts 5, 6, and 7 procedures for resolving disputes concerning labor standards requirements. Such disputes shall be resolved in accordance with those procedures and not the Disputes clause of this contract. Disputes within the meaning of this clause include disputes between the Contractor (or any of its subcontractors) and the contracting agency, the U.S. Department of Labor, or the employees of their representatives.

(End of clause)

37 52.222-15 CERTIFICATION OF ELIGIBILITY (FEB 1988)

(a) By entering into this contract, the Contractor certifies that neither it (nor he or she) nor any person or firm who has an interest in the Contractor's firm is a person or firm ineligible to be awarded Government contracts by virtue of section 3(a) of the Davis-Bacon Act or 29 CFR 5.12(a)(1).

(b) No part of this contract shall be subcontracted to any person or firm ineligible for award of a Government contract by virtue of section 3(a) of the Davis-Bacon Act or 29 CFR 5.12(a)(1).

(c) The penalty for making false statements is prescribed in the U.S. Criminal Code, 18 U.S.C. 1001.

(End of clause)

38 52.222-23 NOTICE OF REQUIREMENT FOR AFFIRMATIVE ACTION TO ENSURE EQUAL EMPLOYMENT OPPORTUNITY (APR 1984)

(a) The offeror's attention is called to the Equal Opportunity clause and the Affirmative Action Compliance Requirements for Construction clause of this solicitation.

(b) The goals for minority and female participation, expressed in percentage terms for the Contractor's aggregate workforce in each trade on all construction work in the covered area, are as follows:

Goals for minority participation for each trade	Goals for female participation for each trade
6.2%	6.9%

These goals are applicable to all the Contractor's construction work performed in the covered area. If the Contractor performs construction work in a geographical area located outside of the covered area, the Contractor shall apply the goals established for the geographical area where the work is actually performed. Goals are published periodically in the Federal Register in notice form, and these notices may be obtained from

any Office of Federal Contract Compliance Programs office.

(c) The Contractor's compliance with Executive Order 11246, as amended, and the regulations in 41 CFR 60-4 shall be based on (1) its implementation of the Equal Opportunity clause, (2) specific affirmative action obligations required by the clause entitled "Affirmative Action Compliance Requirements for Construction," and (3) its efforts to meet the goals. The hours of minority and female employment and training must be substantially uniform throughout the length of the contract, and in each trade. The Contractor shall make a good faith effort to employ minorities and women evenly on each of its projects. The transfer of minority or female employees or trainees from Contractor to Contractor, or from project to project, for the sole purpose of meeting the Contractor's goals shall be a violation of the contract, Executive Order 11246, as amended, and the regulations in 41 CFR 60-4. Compliance with the goals will be measured against the total work hours performed.

(d) The Contractor shall provide written notification to the Director, Office of Federal Contract Compliance Programs, within 10 working days following award of any construction subcontract in excess of $10,000 at any tier for construction work under the contract resulting from this solicitation. The notification shall list the--

(1) Name, address, and telephone number of the subcontractor;

(2) Employer's identification number of the subcontractor;

(3) Estimated dollar amount of the subcontract;

(4) Estimated starting and completion dates of the subcontract; and

(5) Geographical area in which the subcontract is to be performed.

(e) As used in this Notice, and in any contract resulting from this solicitation, the "covered area" is Washington/Pierce/McChord AFB.

(End of provision)

(R 7-2003.14(d) 1978 SEP)

39 52.222-26 EQUAL OPPORTUNITY (APR 1984)

(a) If, during any 12-month period (including the 12 months preceding the award of this contract), the Contractor has been or is awarded nonexempt Federal contracts and/or subcontracts that have an aggregate value in excess of $10,000, the Contractor shall comply with subparagraphs (b)(1) through (11) below. Upon request, the Contractor shall provide information necessary to determine the applicability of this clause.

(b) During performing this contract, the Contractor agrees as follows:

(1) The Contractor shall not discriminate against any employee or applicant for employment because of race, color, religion, sex, or national origin.

(2) The Contractor shall take affirmative action to ensure that applicants are employed, and that employees are treated during employment, without regard to their race, color, religion, sex, or national origin. This shall include, but not be limited to, (i) employment, (ii) upgrading, (iii) demotion, (iv) transfer, (v) recruitment or recruitment advertising, (vi) layoff or termination, (vii) rates of pay or other forms of compensation, and (viii) selection for training, including apprenticeship.

(3) The Contractor shall post in conspicuous places available to employees and applicants for employment the notices to be provided by the Contracting Officer that explain this clause.

(4) The Contractor shall, in all solicitations or advertisements for employees placed by or on behalf of the Contractor, state that all qualified applicants will receive consideration for employment without

regard to race, color, religion, sex, or national origin.

(5) The Contractor shall send, to each labor union or representative of workers with which it has a collective bargaining agreement or other contract or understanding, the notice to be provided by the Contracting Officer advising the labor union or workers' representative of the Contractor's commitments under this clause, and post copies of the notice in conspicuous places available to employees and applicants for employment.

(6) The Contractor shall comply with Executive Order 11246, as amended, and the rules, regulations, and orders of the Secretary of Labor.

(7) The Contractor shall furnish to the contracting agency all information required by Executive Order 11246, as amended, and by the rules, regulations, and orders of the Secretary of Labor. Standard Form 100 (EEO-1), or any successor form, is the prescribed form to be filed within 30 days following the award, unless filed within 12 months preceding the date of award.

(8) The Contractor shall permit access to its books, records, and accounts by the contracting agency or the Office of Federal Contract Compliance Programs (OFCCP) for the purposes of investigation to ascertain the Contractor's compliance with the applicable rules, regulations, and orders.

(9) If the OFCCP determines that the Contractor is not in compliance with this clause or any rule, regulation, or order of the Secretary of Labor, this contract may be canceled, terminated, or suspended in whole or in part and the Contractor may be declared ineligible for further Government contracts, under the procedures authorized in Executive Order 11246, as amended. In addition, sanctions may be imposed and remedies invoked against the Contractor as provided in Executive Order 11246, as amended, the rules, regulations, and orders of the Secretary of Labor, or as otherwise provided by law.

(10) The Contractor shall include the terms and conditions of subparagraph (b)(1) through (11) of this clause in every subcontract or purchase order that is not exempted by the rules, regulations, or orders of the Secretary of Labor issued under Executive Order 11246, as amended, so that these terms and conditions will be binding upon each subcontractor or vendor.

(11) The Contractor shall take such action with respect to any subcontract or purchase order as the contracting agency may direct as a means of enforcing these terms and conditions, including sanctions for noncompliance; provided, that if the Contractor becomes involved in, or is threatened with, litigation with a subcontractor or vendor as a result of any direction, the Contractor may request the United States to enter into the litigation to protect the interests of the United States.

(c) Notwithstanding any other clause in this contract, disputes relative to this clause will be governed by the procedures in 41 CFR 60-1.1.

(End of clause)
(R 7-103.18 1978 SEP)
(R 1-12.803-2)
(R 7-607.13 1978 SEP)

40 52.222-27 AFFIRMATIVE ACTION COMPLIANCE REQUIREMENTS FOR CONSTRUCTION (APR 1984)

(a) Definitions.

"Covered area," as used in this clause, means the geographical area

described in the solicitation for this contract.

"Director," as used in this clause, means Director, Office of Federal Contract Compliance Programs (OFCCP), United States Department of Labor, or any person to whom the Director delegates authority.

"Employer's identification number," as used in this clause, means the Federal Social Security number used on the employer's quarterly federal tax return, U.S. Treasury Department Form 941.

"Minority," as used in this clause, means--

(1) American Indian or Alaskan Native (all persons having origins in any of the original peoples of North America and maintaining identifiable tribal affiliations through membership and participation or community identification).

(2) Asian and Pacific Islander (all persons having origins in any of the original peoples of the Far East, Southeast Asia, the Indian Subcontinent, or the Pacific Islands);

(3) Black (all persons having origins in any of the black African racial groups not of Hispanic origin); and

(4) Hispanic (all persons of Mexican, Puerto Rican, Cuban, Central or South American, or other Spanish culture or origin, regardless of race).

(b) If the Contractor, or a subcontractor at any tier, subcontracts a portion of the work involving any construction trade, each such subcontract in excess of $10,000 shall include this clause and the Notice containing the goals for minority and female participation stated in the solicitation for this contract.

(c) If the Contractor is participating in a Hometown Plan (41 CFR 60-4) approved by the U.S. Department of Labor in a covered area, either individually or through an association, its affirmative action obligations on all work in the plan area (including goals) shall comply with the plan for those trades that have unions participating in the plan. Contractors must be able to demonstrate participation in, and compliance with, the provisions of the plan. Each Contractor or subcontractor participating in an approved plan is also required to comply with its obligations under the Equal Opportunity clause, and to make a good faith effort to achieve each goal under the plan in each trade in which it has employees. The overall good-faith performance by other Contractors or subcontractors toward a goal in an approved plan does not excuse any Contractor's or subcontractor's failure to make good-faith efforts to achieve the plan's goals.

(d) The Contractor shall implement the affirmative action procedures in subparagraphs (g)(1) through (16) of this clause. The goals stated in the solicitation for this contract are expressed as percentages of the total hours of employment and training of minority and female utilization that the Contractor should reasonably be able to achieve in each construction trade in which it has employees in the covered area. If the Contractor performs construction work in a geographical area located outside of the covered area, it shall apply the goals established for the geographical area where that work is actually performed. The Contractor is expected to make substantially uniform progress toward its goals in each craft.

(e) Neither the terms and conditions of any collective bargaining agreement, nor the failure by a union with which the Contractor has a collective bargaining agreement, to refer minorities or women shall excuse the Contractor's obligations under this clause, Executive Order 11246, as amended, or the regulations thereunder.

(f) In order for the nonworking training hours of apprentices and trainees to be counted in meeting the goals, apprentices and trainees must be employed by the Contractor during the training period, and the Contractor must have made a commitment to employ the apprentices and

trainees at the completion of their training, subject to the availability of employment opportunities. Trainees must be trained pursuant to training programs approved by the U.S. Department of Labor.

(g) The Contractor shall take affirmative action to ensure equal employment opportunity. The evaluation of the Contractor's compliance with this clause shall be based upon its effort to achieve maximum results from its actions. The Contractor shall document these efforts fully and implement affirmative action steps at least as extensive as the following:

(1) Ensure a working environment free of harassment, intimidation, and coercion at all sites and in all facilities where the Contractor's employees are assigned to work. The Contractor, if possible, will assign two or more women to each construction project. The Contractor shall ensure that foremen, superintendents, and other onsite supervisory personnel are aware of and carry out the Contractor's obligation to maintain such a working environment, with specific attention to minority or female individuals working at these sites or facilities.

(2) Establish and maintain a current list of sources for minority and female recruitment. Provide written notification to minority and female recruitment sources and community organizations when the Contractor or its unions have employment opportunities available, and maintain a record of the organizations' responses.

(3) Establish and maintain a current file of the names, addresses, and telephone numbers of each minority and female off-the-street applicant, referrals of minorities or females from unions, recruitment sources, or community organizations, and the action taken with respect to each individual. If an individual was sent to the union hiring hall for referral and not referred back to the Contractor by the union or, if referred back, not employed by the Contractor, this shall be documented in the file, along with whatever additional actions the Contractor may have taken.

(4) Immediately notify the Director when the union or unions with which the Contractor has a collective bargaining agreement has not referred back to the Contractor a minority or woman sent by the Contractor, or when the Contractor has other information that the union referral process has impeded the Contractor's efforts to meet its obligations.

(5) Develop on-the-job training opportunities and/or participate in training programs for the area that expressly include minorities and women, including upgrading programs and apprenticeship and trainee programs relevant to the Contractor's employment needs, especially those programs funded or approved by the Department of Labor. The Contractor shall provide notice of these programs to the sources compiled under subparagraph (g)(2) above.

(6) Disseminate the Contractor's equal employment policy by--

(i) Providing notice of the policy to unions and to training, recruitment, and outreach programs, and requesting their cooperation in assisting the Contractor in meeting its contract obligations;

(ii) Including the policy in any policy manual and in collective bargaining agreements;

(iii) Publicizing the policy in the company newspaper, annual report, etc.;

(iv) Reviewing the policy with all management personnel and with all minority and female employees at least once a year; and

(v) Posting the policy on bulletin boards accessible to employees at each location where construction work is performed.

(7) Review, at least annually, the Contractor's equal employment policy and affirmative action obligations with all employees having

responsibility for hiring, assignment, layoff, termination, or other employment decisions. Conduct review of this policy with all onsite supervisory personnel before initiating construction work at a job site. A written record shall be made and maintained identifying the time and place of these meetings, persons attending, subject matter discussed, and disposition of the subject matter.

(8) Disseminate the Contractor's equal employment policy externally by including it in any advertising in the news media, specifically including minority and female news media. Provide written notification to, and discuss this policy with, other Contractors and subcontractors with which the Contractor does or anticipates doing business.

(9) Direct recruitment efforts, both oral and written, to minority, female, and community organizations, to schools with minority and female students, and to minority and female recruitment and training organizations serving the Contractor's recruitment area and employment needs. Not later than 1 month before the date for acceptance of applications for apprenticeship or training by any recruitment source, send written notification to organizations such as the above, describing the openings, screening procedures, and tests to be used in the selection process.

(10) Encourage present minority and female employees to recruit minority persons and women. Where reasonable, provide after-school, summer, and vacation employment to minority and female youth both on the site and in other areas of the Contractor's workforce.

(11) Validate all tests and other selection requirements where required under 41 CFR 60-3.

(12) Conduct, at least annually, an inventory and evaluation at least of all minority and female personnel for promotional opportunities. Encourage these employees to seek or to prepare for, through appropriate training, etc., opportunities for promotion.

(13) Ensure that seniority practices job classifications, work assignments, and other personnel practices do not have a discriminatory effect by continually monitoring all personnel and employment-related activities to ensure that the Contractor's obligations under this contract are being carried out.

(14) Ensure that all facilities and company activities are nonsegregated except that separate or single-user toilet and necessary changing facilities shall be provided to assure privacy between the sexes.

(15) Maintain a record of solicitations for subcontracts for minority and female construction contractors and suppliers, including circulation of solicitations to minority and female contractor associations and other business associations.

(16) Conduct a review, at least annually, of all supervisors' adherence to and performance under the Contractor's equal employment policy and affirmative action obligations.

(h) The Contractor is encouraged to participate in voluntary associations that may assist in fulfilling one or more of the affirmative action obligations contained in subparagraphs (g)(1) through (16). The efforts of a contractor association, joint contractor-union, contractor-community, or similar group of which the contractor is a member and participant may be asserted as fulfilling one or more of its obligations under subparagraphs (g)(1) through (16), provided the Contractor--

(1) Actively participates in the group;

(2) Makes every effort to ensure that the group has a positive impact on the employment of minorities and women in the industry;

(3) Ensures that concrete benefits of the program are reflected in the Contractor's minority and female workforce participation;

(4) Makes a good-faith effort to meet its individual goals and timetables; and

(5) Can provide access to documentation that demonstrates the effectiveness of actions taken on behalf of the Contractor. The obligation to comply is the Contractor's, and failure of such a group to fulfill an obligation shall not be a defense for the Contractor's noncompliance.

(i) A single goal for minorities and a separate single goal for women shall be established. The Contractor is required to provide equal employment opportunity and to take affirmative action for all minority groups, both male and female, and all women, both minority and nonminority. Consequently, the Contractor may be in violation of Executive Order 11246, as amended, if a particular group is employed in a substantially disparate manner.

(j) The Contractor shall not use goals or affirmative action standards to discriminate against any person because of race, color, religion, sex, or national origin.

(k) The Contractor shall not enter into any subcontract with any person or firm debarred from Government contracts under Executive Order 11246, as amended.

(l) The Contractor shall carry out such sanctions and penalties for violation of this clause and of the Equal Opportunity clause, including suspension, termination, and cancellation of existing subcontracts, as may be imposed or ordered under Executive Order 11246, as amended, and its implementing regulations, by the OFCCP. Any failure to carry out these sanctions and penalties as ordered shall be a violation of this clause and Executive Order 11246, as amended.

(m) The Contractor in fulfilling its obligations under this clause shall implement affirmative action procedures at least as extensive as those prescribed in paragraph (g) above, so as to achieve maximum results from its efforts to ensure equal employment opportunity. If the Contractor fails to comply with the requirements of Executive Order 11246, as amended, the implementing regulations, or this clause, the Director shall take action as prescribed in 41 CFR 60-4.8.

(n) The Contractor shall designate a responsible official to--

(1) Monitor all employment-related activity to ensure that the Contractor's equal employment policy is being carried out;

(2) Submit reports as may be required by the Government; and

(3) Keep records that shall at least include for each employee the name, address, telephone number, construction trade, union affiliation (if any), employee identification number, social security number, race, sex, status (e.g., mechanic, apprentice, trainee, helper, or laborer), dates of changes in status, hours worked per week in the indicated trade, rate of pay, and locations at which the work was performed. Records shall be maintained in an easily understandable and retrievable form; however, to the degree that existing records satisfy this requirement, separate records are not required to be maintained.

(o) Nothing contained herein shall be construed as a limitation upon the application of other laws that establish different standards of compliance or upon the requirements for the hiring of local or other area residents (e.g., those under the Public Works Employment Act of 1977 and the Community Development Block Grant Program).

(End of clause)

(R 7-603.60 1978 SEP)

41 52.222-35 AFFIRMATIVE ACTION FOR DISABLED VETERANS AND VETERANS OF THE VIETNAM ERA (APR 1998)

(a) Definitions. As used in this clause--

"All employment openings" includes all positions except executive and top management, those positions that will be filled from within the contractor's organization, and positions lasting 3 days or less. This term includes full-time employment, temporary employment of more than 3 days' duration, and part-time employment.

"Appropriate office of the State employment service system" means the local office of the Federal-State national system of public employment offices with assigned responsibility to serve the area where the employment opening is to be filled, including the District of Columbia, Guam, the Commonwealth of Puerto Rico, and the Virgin Islands.

"Positions that will be filled from within the Contractor's organization" means employment openings for which no consideration will be given to persons outside the Contractor's organization (including any affiliates, subsidiaries, and parent companies) and includes any openings that the Contractor proposes to fill from regularly established "recall" lists. The exception does not apply to a particular opening once an employer decides to consider applicants outside of its organization.

"Veteran of the Vietnam era" means a person who--

(1) Served on active duty for a period of more than 180 days, any part of which occurred between August 5, 1964, and May 7, 1975, and was discharged or released therefrom with other than a dishonorable discharge; or

(2) Was discharged or released from active duty for a service-connected disability if any part of such active duty was performed between August 5, 1964, and May 7, 1975.

(b) General. (1) Regarding any position for which the employee or applicant for employment is qualified, the Contractor shall not discriminate against the individual because the individual is a disabled veteran or a veteran of the Vietnam era. The Contractor agrees to take affirmative action to employ, advance in employment, and otherwise treat qualified disabled veterans and veterans of the Vietnam era without discrimination based upon their disability or veterans' status in all employment practices such as--

(i) Employment;
(ii) Upgrading;
(iii) Demotion or transfer;
(iv) Recruitment;
(v) Advertising;
(vi) Layoff or termination;
(vii) Rates of pay or other forms of compensation; and
(viii) Selection for training, including apprenticeship.

(2) The Contractor agrees to comply with the rules, regulations, and relevant orders of the Secretary of Labor (Secretary) issued under the Vietnam Era Veterans' Readjustment Assistance Act of 1972 (the Act), as amended.

(c) Listing openings. (1) The Contractor agrees to list all employment openings existing at contract award or occurring during contract performance, at an appropriate office of the State employment service system in the locality where the opening occurs. These openings include those occurring at any Contractor facility, including one not connected

with performing this contract. An independent corporate affiliate is exempt from this requirement.

(2) State and local government agencies holding Federal contracts of $10,000 or more shall also list all employment openings with the appropriate office of the State employment service.

(3) The listing of employment openings with the State employment service system is required at least concurrently with using any other recruitment source or effort and involves the obligations of placing a bona fide job order, including accepting referrals of veterans and nonveterans. This listing does not require hiring any particular job applicant or hiring from any particular group of job applicants and is not intended to relieve the Contractor from any requirements of Executive orders or regulations concerning nondiscrimination in employment.

(4) Whenever the Contractor becomes contractually bound to the listing terms of this clause, it shall advise the State employment service system, in each State where it has establishments, of the name and location of each hiring location in the State. As long as the Contractor is contractually bound to these terms and has so advised the State system, it need not advise the State system of subsequent contracts. The Contractor may advise the State system when it is no longer bound by this contract clause.

(d) Applicability. This clause does not apply to the listing of employment openings that occur and are filled outside the 50 States, the District of Columbia, the Commonwealth of Puerto Rico, Guam, and the Virgin Islands.

(e) Postings. (1) The Contractor agrees to post employment notices stating (i) the Contractor's obligation under the law to take affirmative action to employ and advance in employment qualified disabled veterans and veterans of the Vietnam era, and (ii) the rights of applicants and employees.

(2) These notices shall be posted in conspicuous places that are available to employees and applicants for employment. They shall be in a form prescribed by the Deputy Assistant Secretary for Federal Contract Compliance Programs, Department of Labor (Deputy Assistant Secretary), and provided by or through the Contracting Officer.

(3) The Contractor shall notify each labor union or representative of workers with which it has a collective bargaining agreement or other contract understanding, that the Contractor is bound by the terms of the Act, and is committed to take affirmative action to employ, and advance in employment, qualified disabled veterans and veterans of the Vietnam era.

(f) Noncompliance. If the Contractor does not comply with the requirements of this clause, appropriate actions may be taken under the rules, regulations, and relevant orders of the Secretary issued pursuant to the Act.

(g) Subcontracts. The Contractor shall include the terms of this clause in every subcontract or purchase order of $10,000 or more unless exempted by rules, regulations, or orders of the Secretary. The Contractor shall act as specified by the Deputy Assistant Secretary to enforce the terms, including action for noncompliance.

(End of clause)

42 52.222-36 AFFIRMATIVE ACTION FOR WORKERS WITH DISABILITIES (JUN 1998)

(a) General. (1) Regarding any position for which the employee or applicant for employment is qualified, the Contractor shall not discriminate against any employee or applicant because of physical or mental disability. The Contractor agrees to take affirmative action to employ, advance in employment, and otherwise treat qualified individuals with disabilities without discrimination based upon their physical or mental disability in all employment practices such as--

(i) Recruitment, advertising, and job application procedures;

(ii) Hiring, upgrading, promotion, award of tenure, demotion, transfer, layoff, termination, right of return from layoff, and rehiring;

(iii) Rates of pay or any other form of compensation and changes in compensation;

(iv) Job assignments, job classifications, organizational structures, position descriptions, lines of progression, and seniority lists;

(v) Leaves of absence, sick leave, or any other leave;

(vi) Fringe benefits available by virtue of employment, whether or not administered by the Contractor;

(vii) Selection and financial support for training, including apprenticeships, professional meetings, conferences, and other related activities, and selection for leaves of absence to pursue training;

(viii) Activities sponsored by the Contractor, including social or recreational programs; and

(ix) Any other term, condition, or privilege of employment.

(2) The Contractor agrees to comply with the rules, regulations, and relevant orders of the Secretary of Labor (Secretary) issued under the Rehabilitation Act of 1973 (29 U.S.C. 793) (the Act), as amended.

(b) Postings. (1) The Contractor agrees to post employment notices stating--

(i) The Contractor's obligation under the law to take affirmative action to employ and advance in employment qualified individuals with disabilities; and

(ii) The rights of applicants and employees.

(2) These notices shall be posted in conspicuous places that are available to employees and applicants for employment. The Contractor shall ensure that applicants and employees with disabilities are informed of the contents of the notice (e.g., the Contractor may have the notice read to a visually disabled individual, or may lower the posted notice so that it might be read by a person in a wheelchair). The notices shall be in a form prescribed by the Deputy Assistant Secretary for Federal Contract Compliance of the U.S. Department of Labor (Deputy Assistant Secretary) and shall be provided by or through the Contracting Officer.

(3) The Contractor shall notify each labor union or representative of workers with which it has a collective bargaining agreement or other contract understanding, that the Contractor is bound by the terms of Section 503 of the Act and is committed to take affirmative action to employ, and advance in employment, qualified individuals with physical or mental disabilities.

(c) Noncompliance. If the Contractor does not comply with the

requirements of this clause, appropriate actions may be taken under the rules, regulations, and relevant orders of the Secretary issued pursuant to the Act.

(d) Subcontracts. The Contractor shall include the terms of this clause in every subcontract or purchase order in excess of $10,000 unless exempted by rules, regulations, or orders of the Secretary. The Contractor shall act as specified by the Deputy Assistant Secretary to enforce the terms, including action for noncompliance.

(End of clause)

43 52.222-37 EMPLOYMENT REPORTS ON DISABLED VETERANS AND VETERANS OF THE VIETNAM ERA (JAN 1999)

(a) Unless the Contractor is a State or local government agency, the Contractor shall report at least annually, as required by the Secretary of Labor, on--

(1) The number of disabled veterans and the number of veterans of the Vietnam era in the workforce of the Contractor by job category and hiring location; and

(2) The total number of new employees hired during the period covered by the report, and of that total, the number of disabled veterans, and the number of veterans of the Vietnam era.

(b) The above items shall be reported by completing the form entitled "Federal Contractor Veterans' Employment Report VETS-100."

(c) Reports shall be submitted no later than September 30 of each year beginning September 30, 1988.

(d) The employment activity report required by paragraph (a)(2) of this clause shall reflect total hires during the most recent 12-month period as of the ending date selected for the employment profile report required by paragraph (a)(1) of this clause. Contractors may select an ending date: (1) As of the end of any pay period during the period January through March 1st of the year the report is due, or (2) as of December 31, if the contractor has previous written approval from the Equal Employment Opportunity Commission to do so for purposes of submitting the Employer Information Report EEO-1 (Standard Form 100).

(e) The count of veterans reported according to paragraph (a) of this clause shall be based on voluntary disclosure. Each Contractor subject to the reporting requirements at 38 U.S.C. 4212 shall invite all disabled veterans and veterans of the Vietnam era who wish to benefit under the affirmative action program at 38 U.S.C. 4212 to identify themselves to the Contractor. The invitation shall state that the information is voluntarily provided; that the information will be kept confidential; that disclosure or refusal to provide the information will not subject the applicant or employee to any adverse treatment; and that the information will be used only in accordance with the regulations promulgated under 38 U.S.C. 4212.

(f) Subcontracts. The Contractor shall include the terms of this clause in every subcontract or purchase order of $10,000 or more unless exempted by rules, regulations, or orders of the Secretary.

(End of clause)

44 52.223-2 CLEAN AIR AND WATER (APR 1984)

(a) "Air Act", as used in this clause, means the Clean Air Act (42 U.S.C. 7401, et seq.).

"Clean air standards," as used in this clause, means--

(1) Any enforceable rules, regulations, guidelines, standards, limitations, orders, controls, prohibitions, work practices, or other requirements contained in, issued under, or otherwise adopted under the Air Act or Executive Order 11738;

(2) An applicable implementation plan as described in section 110(d) of the Air Act (42 U.S.C. 7410(d));

(3) An approved implementation procedure or plan under section 111(c) or section 111(d) of the Air Act (42 U.S.C. 7411(c) or (d)); or

(4) An approved implementation procedure under section 112(d) of the Air Act (42 U.S.C. 7412(d)).

"Clean water standards," as used in this clause, means any enforceable limitation, control, condition, prohibition, standard, or other requirement promulgated under the Water Act or contained in a permit issued to a discharger by the EPA or by a State under an approved program, as authorized by section 402 of the Water Act (33 U.S.C. 1342), or by local government to ensure compliance with pretreatment regulations as required by section 307 of the Water Act (33 U.S.C. 1317).

"Compliance," as used in this clause, means compliance with--

(1) Clean air or water standards; or

(2) A schedule or plan ordered or approved by a court of competent jurisdiction, the EPA, or an air or water pollution control agency under the requirements of the Air Act or Water Act and related regulations.

"Facility," as used in this clause, means any building, plant, installation, structure, mine, vessel or other floating craft, location, or site of operations, owned, leased, or supervised by a Contractor or subcontractor, used in the performance of a contract or subcontract. When a location or site of operations includes more than one building, plant, installation, or structure, the entire location or site shall be deemed a facility except when the Administrator, or a designee, of the EPA determines that independent facilities are collocated in one geographical area.

"Water Act," as used in this clause, means Clean Water Act (33 U.S.C. 1251, et seq.).

(b) The Contractor agrees--

(1) To comply with all the requirements of section 114 of the Clean Air Act (42 U.S.C. 7414) and section 308 of the Clean Water Act (33 U.S.C. 1318) relating to inspection, monitoring, entry, reports, and information, as well as other requirements specified in section 114 and section 308 of the Air Act and the Water Act, and all regulations and guidelines issued to implement those acts before the award of this contract;

(2) That no portion of the work required by this prime contract will be performed in a facility listed on the EPA List of Violating Facilities on the date when this contract was awarded unless and until the EPA eliminates the name of the facility from the listing;

(3) To use best efforts to comply with clean air standards and clean water standards at the facility in which the contract is being performed; and

(4) To insert the substance of this clause into any nonexempt subcontract, including this subparagraph (b)(4).

(End of clause)

(R 7-103.29 1975 OCT)

(R 1-1.2302)

45 52.223-6 DRUG-FREE WORKPLACE (JAN 1997)

(a) Definitions. As used in this clause--

"Controlled substance" means a controlled substance in schedules I through V of section 202 of the Controlled Substances Act (21 U.S.C. 812) and as further defined in regulation at 21 CFR 1308.11 - 1308.15.

"Conviction" means a finding of guilt (including a plea of nolo contendere) or imposition of sentence, or both, by any judicial body charged with the responsibility to determine violations of the Federal or State criminal drug statutes.

"Criminal drug statute" means a Federal or non-Federal criminal statute involving the manufacture, distribution, dispensing, possession or use of any controlled substance.

"Drug-free workplace" means the site(s) for the performance of work done by the Contractor in connection with a specific contract at which employees of the Contractor are prohibited from engaging in the unlawful manufacture, distribution, dispensing, possession, or use of a controlled substance.

"Employee" means an employee of a Contractor directly engaged in the performance of work under a Government contract. "Directly engaged" is defined to include all direct cost employees and any other Contractor employee who has other than a minimal impact or involvement in contract performance.

"Individual" means an offeror/contractor that has no more than one employee including the offeror/contractor.

(b) The Contractor, if other than an individual, shall--within 30 days after award (unless a longer period is agreed to in writing for contracts of 30 days or more performance duration), or as soon as possible for contracts of less than 30 days performance duration--

(1) Publish a statement notifying its employees that the unlawful manufacture, distribution, dispensing, possession, or use of a controlled substance is prohibited in the Contractor's workplace and specifying the actions that will be taken against employees for violations of such prohibition;

(2) Establish an ongoing drug-free awareness program to inform such employees about--

(i) The dangers of drug abuse in the workplace;

(ii) The Contractor's policy of maintaining a drug-free workplace;

(iii) Any available drug counseling, rehabilitation, and employee assistance programs; and

(iv) The penalties that may be imposed upon employees for drug abuse violations occurring in the workplace;

(3) Provide all employees engaged in performance of the contract with a copy of the statement required by subparagraph (b)(1) of this clause;

(4) Notify such employees in writing in the statement required by subparagraph (b)(1) of this clause that, as a condition of continued employment on this contract, the employee will--

(i) Abide by the terms of the statement; and

(ii) Notify the employer in writing of the employee's conviction under a criminal drug statute for a violation occurring in the workplace no later than 5 days after such conviction.

(5) Notify the Contracting Officer in writing within 10 days after receiving notice under subdivision (b)(4)(ii) of this clause, from an employee or otherwise receiving actual notice of such conviction. The notice shall include the position title of the employee;

(6) Within 30 days after receiving notice under subdivision (b)(4)(ii) of this clause of a conviction, take one of the following actions with respect to any employee who is convicted of a drug abuse violation

occurring in the workplace:

(i) Taking appropriate personnel action against such employee, up to and including termination; or

(ii) Require such employee to satisfactorily participate in a drug abuse assistance or rehabilitation program approved for such purposes by a Federal, State, or local health, law enforcement, or other appropriate agency, and

(7) Make a good faith effort to maintain a drug-free workplace through implementation of subparagraphs (b)(1) through (b)(6) of this clause.

(c) The Contractor, if an individual, agrees by award of the contract or acceptance of a purchase order, not to engage in the unlawful manufacture, distribution, dispensing, possession, or use of a controlled substance while performing this contract.

(d) In addition to other remedies available to the Government, the Contractor's failure to comply with the requirements of paragraph (b) or (c) of this clause may, pursuant to FAR 23.506, render the Contractor subject to suspension of contract payments, termination of the contract for default, and suspension or debarment.

(End of clause)

46 52.223-14 TOXIC CHEMICAL RELEASE REPORTING (OCT 1996)

(a) Unless otherwise exempt, the Contractor, as owner or operator of a facility used in the performance of this contract, shall file by July 1 for the prior calendar year an annual Toxic Chemical Release Inventory Form (Form R) as described in sections 313(a) and (g) of the Emergency Planning and Community Right-to-Know Act of 1986 (EPCRA) (42 U.S.C. 11023(a) and (g)), and section 6607 of the Pollution Prevention Act of 1990 (PPA) (42 U.S.C. 13106). The Contractor shall file, for each facility subject to the Form R filing and reporting requirements, the annual Form R throughout the life of the contract.

(b) A Contractor owned or operated facility used in the performance of this contract is exempt from the requirement to file an annual Form R if--

(1) The facility does not manufacture, process, or otherwise use any toxic chemicals listed under section 313(c) of EPCRA, 42 U.S.C. 11023(c);

(2) The facility does not have 10 or more full-time employees as specified in section 313(b)(1)(A) of EPCRA, 42 U.S.C. 11023(b)(1)(A);

(3) The facility does not meet the reporting thresholds of toxic chemicals established under section 313(f) of EPCRA, 42 U.S.C. 11023(f) (including the alternate thresholds at 40 CFR 372.27, provided an appropriate certification form has been filed with EPA);

(4) The facility does not fall within Standard Industrial Classification Code (SIC) designations 20 through 39 as set forth in Section 19.102 of the Federal Acquisition Regulation (FAR); or

(5) The facility is not located within any State of the United States, the District of Columbia, the Commonwealth of Puerto Rico, Guam, American Samoa, the United States Virgin Islands, the Northern Mariana Islands, or any other territory or possession over which the United States has jurisdiction.

(c) If the Contractor has certified to an exemption in accordance with one or more of the criteria in paragraph (b) of this clause, and after award of the contract circumstances change so that any of its owned or operated facilities used in the performance of this contract is no longer exempt--

(1) The Contractor shall notify the Contracting Officer; and

(2) The Contractor, as owner or operator of a facility used in the performance of this contract that is no longer exempt, shall (i) submit a Toxic Chemical Release Inventory Form (Form R) on or before July 1 for the prior calendar year during which the facility becomes eligible; and (ii) continue to file the annual Form R for the life of the contract for such facility.

(d) The Contracting Officer may terminate this contract or take other action as appropriate, if the Contractor fails to comply accurately and fully with the EPCRA and PPA toxic chemical release filing and reporting requirements.

(e) Except for acquisitions of commercial items as defined in FAR Part 2, the Contractor shall--

(1) For competitive subcontracts expected to exceed $100,000 (including all options), include a solicitation provision substantially the same as the provision at FAR 52.223-13, Certification of Toxic Chemical Release Reporting; and

(2) Include in any resultant subcontract exceeding $100,000 (including all options), the substance of this clause, except this paragraph (e).

(End of clause)

47 52.225-11 RESTRICTIONS ON CERTAIN FOREIGN PURCHASES (AUG 1998)

(a) Unless advance written approval of the Contracting Officer is obtained, the Contractor shall not acquire, for use in the performance of this contract, any supplies or services originating from sources within, or that were located in or transported from or through, countries whose products are banned from importation into the United States by Executive order or regulations of the Office of Foreign Assets Control, Department of the Treasury. Those countries include Cuba, Iran, Iraq, Libya, North Korea, and Sudan.

(b) The Contractor shall not acquire for use in the performance of this contract any supplies or services from entities controlled by the Government of Iraq.

(c) The Contractor agrees to insert the provisions of this clause, including this paragraph (c), in all subcontracts hereunder.

(End of clause)

48 52.225-15 BUY AMERICAN ACT--CONSTRUCTION MATERIALS UNDER TRADE AGREEMENTS ACT AND NORTH AMERICAN FREE TRADE AGREEMENT (JUN 1997)

(a) Definitions. As used in this clause--

"Components" means those articles, materials, and supplies incorporated directly into construction materials.

"Construction material" means an article, material, or supply brought to the construction site for incorporation into the building or work. Construction material also includes an item brought to the site pre-assembled from articles, materials, or supplies. However, emergency life safety systems, such as emergency lighting, fire alarm, and audio evacuation systems, which are discrete systems incorporated into a public building or work and which are produced as a complete system, shall be evaluated as a single and distinct construction material regardless of when or how the individual parts or components of such systems are delivered to the construction site.

"Designated country construction material" means a construction material

that (a) is wholly the growth, product, or manufacture of a designated country (as defined at FAR 25.401), or (b) in the case of a construction material which consists in whole or in part of materials from another country or instrumentality, has been substantially transformed in a designated country into a new and different construction material distinct from the materials from which it was transformed.

"Domestic construction material" means (l) an unmanufactured construction material mined or produced in the United States, or (2) a construction material manufactured in the United States, if the cost of its components mined, produced, or manufactured in the United States exceeds 50 percent of the cost of all its components. Components of foreign origin of the same class or kind as the construction materials determined to be unavailable pursuant to subparagraph 25.202(a)(2) of the Federal Acquisition Regulation (FAR) shall be treated as domestic.

"North American Free Trade Agreement (NAFTA) country" means Canada or Mexico.

"NAFTA country construction material" means a construction material that (a) is wholly the growth, product, or manufacture of a NAFTA country, or (b) in the case of a construction material which consists in whole or in part of materials from another country or instrumentality, has been substantially transformed in a NAFTA country into a new and different construction material distinct from the materials from which it was transformed.

(b)(1) The Buy American Act (41 U.S.C. 10a--10d) requires that only domestic construction material be used in performing this contract, except as provided in paragraphs (b)(2), (b)(3), and (b)(4) of this clause.

(2) The Trade Agreements Act and the North American Free Trade Agreement (NAFTA) provide that designated country and NAFTA country construction materials are exempted from application of the Buy American Act.

(3) The requirement in paragraph (b)(1) of this clause does not apply to the excepted construction material or components listed by the Government as follows:

%%Insert list of applicable accepted materials or indicate "none"

none

(4) Other foreign construction material may be added to the list in paragraph (b)(3) of this clause if the Government determines that--

(i) The cost would be unreasonable (the cost of a particular domestic construction material shall be determined to be unreasonable when the cost of such material exceeds the cost of foreign material by more than 6 percent, unless the agency head determines a higher percentage to be appropriate);

(ii) The application of the restriction of the Buy American Act to a particular construction material would be impracticable or inconsistent with the public interest; or (iii) The construction material is not mined, produced, or manufactured in the United States in sufficient and reasonably available commercial quantities of a satisfactory quality.

(5) The Contractor agrees that only domestic construction materials, NAFTA country construction materials, or designated country construction materials will be used by the Contractor, subcontractors, material men, and suppliers in the performance of this contract, except for foreign construction materials, if any, listed in paragraph (b)(3) of this clause.

(c) Request for determination.

(1) Contractors requesting to use foreign construction material under paragraph (b)(4) of this clause shall provide adequate information for Government evaluation of the request for a determination regarding the

inapplicability of the Buy American Act. Each submission shall include a description of the foreign and domestic construction materials, including unit of measure, quantity, price, time of delivery or availability, location of the construction project, name and address of the proposed contractor, and a detailed justification of the reason for use of foreign materials cited in accordance with paragraph (b)(4) of this clause. A submission based on unreasonable cost shall include a reasonable survey of the market and a completed price comparison table in the format in paragraph (d) of this clause. The price of construction material shall include all delivery costs to the construction site and any applicable duty (whether or not a duty-free certificate may be issued).

(2) If the Government determines after contract award that an exception to the Buy American Act applies, the contract shall be modified to allow use of the foreign construction material, and adequate consideration shall be negotiated. However, when the basis for the exception is the unreasonable price of a domestic construction material, adequate consideration shall not be less than the differential established in paragraph (b)(4)(i) of this clause.

(3) If the Government does not determine that an exception to the Buy American Act applies, the use of that particular foreign construction material will be a failure to comply with the Act.

(d) For evaluation of requests under paragraph (c) of this clause based on unreasonable cost, the following information and any applicable supporting data based on the survey of suppliers shall be included in the request:

Foreign and Domestic Construction Materials Price Comparison

Construction material description	Unit of measure	Quantity	Price (dollars) +
Item 1:			
Foreign construction material.....	.....	.....	.....
Domestic construction material.....	.....	.....	.....
Item 2:			
Foreign construction material.....	.....	.....	.....
Domestic construction material.....	.....	.....	.....

List name, address, telephone number, and contact for suppliers surveyed. Attach copy of response; if oral, attach summary. Include other applicable supporting information.

+ Include all delivery costs to the construction site and any applicable duty (whether or not a duty-free entry certificate is issued).

(End of clause)

49 52.225-15 I BUY AMERICAN ACT--CONSTRUCTION MATERIALS UNDER TRADE AGREEMENTS ACT AND NORTH AMERICAN FREE TRADE AGREEMENT (JUN 1997)--ALTERNATE I (MAY 1997)

(a) Definitions. As used in this clause--

"Components" means those articles, materials, and supplies incorporated directly into construction materials.

"Construction material" means an article, material, or supply brought to the construction site for incorporation into the building or work. Construction material also includes an item brought to the site pre-assembled from articles, materials, or supplies. However, emergency life safety systems, such as emergency lighting, fire alarm, and audio

evacuation systems, which are discrete systems incorporated into a public building or work and which are produced as a complete system, shall be evaluated as a single and distinct construction material regardless of when or how the individual parts or components of such systems are delivered to the construction site.

"Designated country construction material" means a construction material that (a) is wholly the growth, product, or manufacture of a designated country (as defined at FAR 25.401), or (b) in the case of a construction material which consists in whole or in part of materials from another country or instrumentality, has been substantially transformed in a designated country into a new and different construction material distinct from the materials from which it was transformed.

"Domestic construction material" means (l) an unmanufactured construction material mined or produced in the United States, or (2) a construction material manufactured in the United States, if the cost of its components mined, produced, or manufactured in the United States exceeds 50 percent of the cost of all its components. Components of foreign origin of the same class or kind as the construction materials determined to be unavailable pursuant to subparagraph 25.202(a)(2) of the Federal Acquisition Regulation (FAR) shall be treated as domestic.

"North American Free Trade Agreement (NAFTA) country" means Canada or Mexico.

"NAFTA country construction material" means a construction material that (a) is wholly the growth, product, or manufacture of a NAFTA country, or (b) in the case of a construction material which consists in whole or in part of materials from another country or instrumentality, has been substantially transformed in a NAFTA country into a new and different construction material distinct from the materials from which it was transformed.

(b)(1) The Buy American Act (41 U.S.C. 10a--10d) requires that only domestic construction material be used in performing this contract, except as provided in paragraphs (b)(2), (b)(3), and (b)(4) of this clause.

(2) The North American Free Trade Agreement (NAFTA) provides that NAFTA construction materials are exempted from application of the Buy American Act.

(3) The requirement in paragraph (b)(1) of this clause does not apply to the excepted construction material or components listed by the Government as follows:

%%Insert list of applicable accepted materials or indicate "none"

_____

(4) Other foreign construction material may be added to the list in paragraph (b)(3) of this clause if the Government determines that--

(i) The cost would be unreasonable (the cost of a particular domestic construction material shall be determined to be unreasonable when the cost of such material exceeds the cost of foreign material by more than 6 percent, unless the agency head determines a higher percentage to be appropriate);

(ii) The application of the restriction of the Buy American Act to a particular construction material would be impracticable or inconsistent with the public interest; or (iii) The construction material is not mined, produced, or manufactured in the United States in sufficient and reasonably available commercial quantities of a satisfactory quality.

(5) The Contractor agrees that only domestic construction materials or NAFTA country construction materials will be used by the Contractor, subcontractors, material men, and suppliers in the performance of this contract, except for other foreign construction materials, if any, listed in paragraph (b)(3) of this clause.

(c) Request for determination.

(1) Contractors requesting to use foreign construction material under paragraph (b)(4) of this clause shall provide adequate information for Government evaluation of the request for a determination regarding the inapplicability of the Buy American Act. Each submission shall include a description of the foreign and domestic construction materials, including unit of measure, quantity, price, time of delivery or availability, location of the construction project, name and address of the proposed contractor, and a detailed justification of the reason for use of foreign materials cited in accordance with paragraph (b)(4) of this clause. A submission based on unreasonable cost shall include a reasonable survey of the market and a completed price comparison table in the format in paragraph (d) of this clause. The price of construction material shall include all delivery costs to the construction site and any applicable duty (whether or not a duty-free certificate may be issued).

(2) If the Government determines after contract award that an exception to the Buy American Act applies, the contract shall be modified to allow use of the foreign construction material, and adequate consideration shall be negotiated. However, when the basis for the exception is the unreasonable price of a domestic construction material, adequate consideration shall not be less than the differential established in paragraph (b)(4)(i) of this clause.

(3) If the Government does not determine that an exception to the Buy American Act applies, the use of that particular foreign construction material will be a failure to comply with the Act.

(d) For evaluation of requests under paragraph (c) of this clause based on unreasonable cost, the following information and any applicable supporting data based on the survey of suppliers shall be included in the request:

Foreign and Domestic Construction Materials Price Comparison

Construction material description	Unit of measure	Quantity	Price (dollars) +
Item 1:			
Foreign construction material.....	.....	.....	.....
Domestic construction material.....	.....	.....	.....
Item 2:			
Foreign construction material.....	.....	.....	.....
Domestic construction material.....	.....	.....	.....

List name, address, telephone number, and contact for suppliers surveyed. Attach copy of response; if oral, attach summary. Include other applicable supporting information.

+ Include all delivery costs to the construction site and any applicable duty (whether or not a duty-free entry certificate is issued).

(End of clause)

50 52.225-22 BALANCE OF PAYMENTS PROGRAM--CONSTRUCTION MATERIALS--NAFTA (MAY 1997)

(a) Definitions. As used in this clause--

"Components" means those articles, materials, and supplies incorporated directly into construction materials.

"Construction material" means an article, material, or supply brought to the construction site for incorporation into the building or work.

Construction material also includes an item brought to the site pre-assembled from articles, materials, or supplies. However, emergency life safety systems, such as emergency lighting, fire alarm, and audio evacuation systems, which are discrete systems incorporated into a public building or work and which are produced as a complete system, shall be evaluated as a single and distinct construction material regardless of when or how the individual parts or components of such systems are delivered to the construction site.

"Domestic construction material" means (1) an unmanufactured construction material mined or produced in the United States, or (2) a construction material manufactured in the United States, if the cost of its components mined, produced, or manufactured in the United States exceeds 50 percent of the cost of all its components. Components of foreign origin of the same class or kind as the construction materials determined to be unavailable pursuant to subparagraph 25.202(a)(2) of the Federal Acquisition Regulation shall be treated as domestic.

"NAFTA country construction material" means a construction material that (1) is wholly the growth, product, or manufacture of a NAFTA country, or (2) in the case of a construction material which consists in whole or in part of materials from another country or instrumentality, has been substantially transformed in a NAFTA country into a new and different construction material distinct from the materials from which it was transformed.

"North American Free Trade Agreement (NAFTA) country" means Canada and Mexico.

(b) The Balance of Payments Program provides that the Government give preference to domestic construction material.

(c) The Contractor agrees that only domestic construction material or NAFTA country construction material will be used by the Contractor, subcontractors, material men, and suppliers in the performance of this contract, except for other foreign construction materials, if any, listed in this contract.

(End of clause)

51 52.226-1 UTILIZATION OF INDIAN ORGANIZATIONS AND INDIAN-OWNED ECONOMIC ENTERPRISES (JAN 1999)

(a) For Department of Defense contracts, this clause applies only if the contract includes a subcontracting plan incorporated under the terms of the clause at 52.219-9, Small Business Subcontracting Plan. It does not apply to contracts awarded based on a subcontracting plan submitted and approved under paragraph (g) of the clause at 52.219.

(b) Definitions. As used in this clause:

"Indian" means any person who is a member of any Indian tribe, band, group, pueblo or community which is recognized by the Federal Government as eligible for services from the Bureau of Indian Affairs (BIA) in accordance with 25 U.S.C. 1452(c) and any "Native" as defined in the Alaska Native Claims Settlement Act (43 U.S.C. 1601).

"Indian organization" means the governing body of any Indian tribe or entity established or recognized by the governing body of an Indian tribe for the purposes of 25 U.S.C., Chapter 17.

"Indian-owned economic enterprise" means any Indian-owned (as determined by the Secretary of the Interior) commercial, industrial, or business activity established or organized for the purpose of profit, provided that Indian ownership shall constitute not less than 51 percent of the enterprise.

"Indian tribe" means any Indian tribe, band, group, pueblo or community, including native villages and native groups (including corporations organized by Kenai, Juneau, Sitka, and Kodiak) as defined in the Alaska Native Claims Settlement Act, which is recognized by the Federal Government as eligible for services from BIA in accordance with 25 U.S.C. 1542(c).

"Interested party" means a prime contractor or an actual or prospective offeror whose direct economic interest would be affected by the award of a subcontract or by the failure to award a subcontract.

(c) The Contractor agrees to use its best efforts to give Indian organizations and Indian-owned economic enterprises (25 U.S.C. 1544) the maximum practicable opportunity to participate in the subcontracts it awards to the fullest extent consistent with efficient performance of its contract.

(1) The Contracting Officer and the Contractor, acting in good faith, may rely on the self-certification of an Indian organization or Indian-owned economic enterprise as to its eligibility, unless an interested party challenges its status or the Contracting Officer has independent reason to question that status. In the event of a challenge to the self-certification of a subcontractor, the Contracting Officer shall refer the matter to the U.S. Department of the Interior, Bureau of Indian Affairs (BIA), Attn: Chief, Division of Contracting and Grants Administration, 1849 C Street, NW, MS-334A-SIB, Washington, DC 20245. The BIA will determine the eligibility and notify the Contracting Officer. The 5 percent incentive payment will not be made within 50 working days of subcontract award or while a challenge is pending. If a subcontractor is determined to be an ineligible participant, no incentive payment will be made under the Indian Incentive Program.

(2) The Contractor may request an adjustment under the Indian Incentive Program to the following:

(i) The estimated cost of a cost-type contract.

(ii) The target cost of a cost-plus-incentive-fee prime contract.

(iii) The target cost and ceiling price of a fixed-price incentive prime contract.

(iv) The price of a firm-fixed-price prime contract.

(3) The amount of the equitable adjustment to the prime contract shall be 5 percent of the estimated cost, target cost or firm-fixed-price included in the subcontract initially awarded to the Indian organization or Indian-owned economic enterprise.

(4) The Contractor has the burden of proving the amount claimed and must assert its request for an adjustment prior to completion of contract performance.

(d) The Contracting Officer, subject to the terms and conditions of the contract and the availability of funds, shall authorize an incentive payment of 5 percent of the amount paid to the subcontractor. Contracting Officers shall seek funding in accordance with agency procedures. The Contracting Officer's decision is final and not subject to the Disputes clause of this contract.

(End of clause)

52 52.227-1 AUTHORIZATION AND CONSENT (JUL 1995)

(a) The Government authorizes and consents to all use and manufacture, in performing this contract or any subcontract at any tier, of any invention described in and covered by a United States patent (1) embodied in the structure or composition of any article the delivery of which is

accepted by the Government under this contract or (2) used in machinery, tools, or methods whose use necessarily results from compliance by the Contractor or a subcontractor with (i) specifications or written provisions forming a part of this contract or (ii) specific written instructions given by the Contracting Officer directing the manner of performance. The entire liability to the Government for infringement of a patent of the United States shall be determined solely by the provisions of the indemnity clause, if any, included in this contract or any subcontract hereunder (including any lower-tier subcontract), and the Government assumes liability for all other infringement to the extent of the authorization and consent hereinabove granted.

(b) The Contractor agrees to include, and require inclusion of, this clause, suitably modified to identify the parties, in all subcontracts at any tier for supplies or services (including construction, architect-engineer services, and materials, supplies, models, samples, and design or testing services expected to exceed the simplified acquisition threshold); however, omission of this clause from any subcontract, including those at or below the simplified acquisition threshold, does not affect this authorization and consent.

(End of clause)

53 52.227-2 NOTICE AND ASSISTANCE REGARDING PATENT AND COPYRIGHT INFRINGEMENT (AUG 1996)

(a) The Contractor shall report to the Contracting Officer, promptly and in reasonable written detail, each notice or claim of patent or copyright infringement based on the performance of this contract of which the Contractor has knowledge.

(b) In the event of any claim or suit against the Government on account of any alleged patent or copyright infringement arising out of the performance of this contract or out of the use of any supplies furnished or work or services performed under this contract, the Contractor shall furnish to the Government, when requested by the Contracting Officer, all evidence and information in possession of the Contractor pertaining to such suit or claim. Such evidence and information shall be furnished at the expense of the Government except where the Contractor has agreed to indemnify the Government.

(c) The Contractor agrees to include, and require inclusion of, this clause in all subcontracts at any tier for supplies or services (including construction and architect-engineer subcontracts and those for material, supplies, models, samples, or design or testing services) expected to exceed the simplified acquisition threshold at FAR 2.101.

(End of clause)

54 52.227-4 PATENT INDEMNITY--CONSTRUCTION CONTRACTS (APR 1984)

Except as otherwise provided, the Contractor agrees to indemnify the Government and its officers, agents, and employees against liability, including costs and expenses, for infringement upon any United States patent (except a patent issued upon an application that is now or may hereafter be withheld from issue pursuant to a Secrecy Order under 35 U.S.C. 181) arising out of performing this contract or out of the use or disposal by or for the account of the Government of supplies furnished or work performed under this contract.

(End of clause)

(R 7-602.16 1964 JUN)

55 52.227-7033 RIGHTS IN SHOP DRAWINGS (APR 1966)

(a) Shop drawings for construction means drawings, submitted to the Government by the Construction Contractor, subcontractor or any lower-tier subcontractor pursuant to a construction contract, showing in detail (i) the proposed fabrication and assembly of structural elements and (ii) the installation (i.e., form, fit, and attachment details) of materials or equipment. The Government may duplicate, use, and disclose in any manner and for any purpose shop drawings delivered under this contract.

(b) This clause, including this paragraph (b), shall be included in all subcontracts hereunder at any tier.

(End of clause)

56 52.228-2 ADDITIONAL BOND SECURITY (OCT 1997)

The Contractor shall promptly furnish additional security required to protect the Government and persons supplying labor or materials under this contract if--

(a) Any surety upon any bond, or issuing financial institution for other security, furnished with this contract becomes unacceptable to the Government;

(b) Any surety fails to furnish reports on its financial condition as required by the Government;

(c) The contract price is increased so that the penal sum of any bond becomes inadequate in the opinion of the Contracting Officer; or

(d) An irrevocable letter of credit (ILC) used as security will expire before the end of the period of required security. If the Contractor does not furnish an acceptable extension or replacement ILC, or other acceptable substitute, at least 30 days before an ILC's scheduled expiration, the Contracting officer has the right to immediately draw on the ILC.

(End of clause)

57 52.228-12 PROSPECTIVE SUBCONTRACTOR REQUESTS FOR BONDS (OCT 1995)

In accordance with Section 806(a)(3) of Pub. L. 102-190, as amended by Sections 2091 and 8105 of Pub. L. 103-355, upon the request of a prospective subcontractor or supplier offering to furnish labor or material for the performance of this contract for which a payment bond has been furnished to the Government pursuant to the Miller Act, the Contractor shall promptly provide a copy of such payment bond to the requester.

(End of clause)

58 52.229-3 FEDERAL, STATE, AND LOCAL TAXES (JAN 1991)

(a) "Contract date," as used in this clause, means the date set for bid opening or, if this is a negotiated contract or a modification, the effective date of this contract or modification.

"All applicable Federal, State, and local taxes and duties," as used in this clause, means all taxes and duties, in effect on the contract date, that the taxing authority is imposing and collecting on the transactions or property covered by this contract.

"After-imposed Federal tax," as used in this clause, means any new or

increased Federal excise tax or duty, or tax that was exempted or excluded on the contract date but whose exemption was later revoked or reduced during the contract period, on the transactions or property covered by this contract that the Contractor is required to pay or bear as the result of legislative, judicial, or administrative action taking effect after the contract date. It does not include social security tax or other employment taxes.

"After-relieved Federal tax," as used in this clause, means any amount of Federal excise tax or duty, except social security or other employment taxes, that would otherwise have been payable on the transactions or property covered by this contract, but which the Contractor is not required to pay or bear, or for which the Contractor obtains a refund or drawback, as the result of legislative, judicial, or administrative action taking effect after the contract date.

(b) The contract price includes all applicable Federal, State, and local taxes and duties.

(c) The contract price shall be increased by the amount of any after-imposed Federal tax, provided the Contractor warrants in writing that no amount for such newly imposed Federal excise tax or duty or rate increase was included in the contract price, as a contingency reserve or otherwise.

(d) The contract price shall be decreased by the amount of any after-relieved Federal tax.

(e) The contract price shall be decreased by the amount of any Federal excise tax or duty, except social security or other employment taxes, that the Contractor is required to pay or bear, or does not obtain a refund of, through the Contractor's fault, negligence, or failure to follow instructions of the Contracting Officer.

(f) No adjustment shall be made in the contract price under this clause unless the amount of the adjustment exceeds $250.

(g) The Contractor shall promptly notify the Contracting Officer of all matters relating to any Federal excise tax or duty that reasonably may be expected to result in either an increase or decrease in the contract price and shall take appropriate action as the Contracting Officer directs.

(h) The Government shall, without liability, furnish evidence appropriate to establish exemption from any Federal, State, or local tax when the Contractor requests such evidence and a reasonable basis exists to sustain the exemption.

(End of clause)

59 52.231-5000 EQUIPMENT OWNERSHIP AND OPERATING EXPENSE SCHEDULE (MAR 1995)--EFARS

(a) This clause does not apply to terminations. See 52.249-5000, Basis for Settlement of Proposals and FAR Part 49.

(b) Allowable cost for construction and marine plant and equipment in sound workable condition owned or controlled and furnished by a contractor or subcontractor at any tier shall be based on actual cost data for each piece of equipment or groups of similar serial and series for which the Government can determine both ownership and operating costs from the contractor's accounting records. When both ownership and operating costs cannot be determined for any piece of equipment or groups of similar serial or series equipment from the contractor's accounting records, costs for that equipment shall be based upon the applicable provisions of EP 1110-1-8, Construction Equipment Ownership and Operating Expense Schedule, Region _____. Working conditions shall be considered to be average for determining equipment rates using the schedule unless specified otherwise by

the contracting officer. For equipment not included in the schedule, rates for comparable pieces of equipment may be used or a rate may be developed using the formula provided in the schedule. For forward pricing, the schedule in effect at the time of negotiations shall apply. For retroactive pricing, the schedule in effect at the time the work was performed shall apply.

(c) Equipment rental costs are allowable, subject to the provisions of FAR 31.105(d)(ii) and FAR 31.205-36. Rates for equipment rented from an organization under common control, lease-purchase arrangements, and sale-leaseback arrangements, will be determined using the schedule, except that actual rates will be used for equipment leased from an organization under common control that has an established practice of leasing the same or similar equipment to unaffiliated lessees.

(d) When actual equipment costs are proposed and the total amount of the pricing action exceeds the small purchase threshold, the contracting officer shall request the contractor to submit either certified cost or pricing data, or partial/limited data, as appropriate. The data shall be submitted on Standard Form 1411, Contract Pricing Proposal Cover Sheet.

(End of clause)

60 52.231-7000 SUPPLEMENTAL COST PRINCIPLES (DEC 1991)

When the allowability of costs under this contract is determined in accordance with Part 31 of the Federal Acquisition Regulation (FAR), allowability shall also be determined in accordance with Part 231 of the Defense FAR Supplement, in effect on the date of this contract.

(End of clause)

61 52.232-5 PAYMENTS UNDER FIXED-PRICE CONSTRUCTION CONTRACTS (MAY 1997)

(a) Payment of price. The Government shall pay the Contractor the contract price as provided in this contract.

(b) Progress payments. The Government shall make progress payments monthly as the work proceeds, or at more frequent intervals as determined by the Contracting Officer, on estimates of work accomplished which meets the standards of quality established under the contract, as approved by the Contracting Officer.

(1) The Contractor's request for progress payments shall include the following substantiation:

(i) An itemization of the amounts requested, related to the various elements of work required by the contract covered by the payment requested.

(ii) A listing of the amount included for work performed by each subcontractor under the contract.

(iii) A listing of the total amount of each subcontract under the contract.

(iv) A listing of the amounts previously paid to each such subcontractor under the contract.

(v) Additional supporting data in a form and detail required by the Contracting Officer.

(2) In the preparation of estimates, the Contracting Officer may authorize material delivered on the site and preparatory work done to be taken into consideration. Material delivered to the Contractor at locations other than the site also may be taken into consideration if--

(i) Consideration is specifically authorized by this contract; and

(ii) The Contractor furnishes satisfactory evidence that it has acquired title to such material and that the material will be used to perform this contract.

(c) Contractor certification. Along with each request for progress payments, the Contractor shall furnish the following certification, or payment shall not be made: (However, if the Contractor elects to delete paragraph (c)(4) from the certification, the certification is still acceptable.)

I hereby certify, to the best of my knowledge and belief, that--

(1) The amounts requested are only for performance in accordance with the specifications, terms, and conditions of the contract;

(2) Payments to subcontractors and suppliers have been made from previous payments received under the contract, and timely payments will be made from the proceeds of the payment covered by this certification, in accordance with subcontract agreements and the requirements of chapter 39 of Title 31, United States Code;

(3) This request for progress payments does not include any amounts which the prime contractor intends to withhold or retain from a subcontractor or supplier in accordance with the terms and conditions of the subcontract; and

(4) This certification is not to be construed as final acceptance of a subcontractor's performance.

_____
(Name)

_____
(Title)

_____
(Date)

(d) Refund of unearned amounts. If the Contractor, after making a certified request for progress payments, discovers that a portion or all of such request constitutes a payment for performance by the Contractor that fails to conform to the specifications, terms, and conditions of this contract (hereinafter referred to as the "unearned amount"), the Contractor shall--

(1) Notify the Contracting Officer of such performance deficiency; and

(2) Be obligated to pay the Government an amount (computed by the Contracting Officer in the manner provided in paragraph (j) of this clause) equal to interest on the unearned amount from the 8th day after the date of receipt of the unearned amount until--

(i) The date the Contractor notifies the Contracting Officer that the performance deficiency has been corrected; or

(ii) The date the Contractor reduces the amount of any subsequent certified request for progress payments by an amount equal to the unearned amount.

(e) Retainage. If the Contracting Officer finds that satisfactory progress was achieved during any period for which a progress payment is to be made, the Contracting Officer shall authorize payment to be made in full. However, if satisfactory progress has not been made, the Contracting Officer may retain a maximum of 10 percent of the amount of the payment until satisfactory progress is achieved. When the work is substantially complete, the Contracting Officer may retain from previously withheld funds and future progress payments that amount the Contracting Officer considers adequate for protection of the Government and shall release to the Contractor all the remaining withheld funds. Also, on completion and

acceptance of each separate building, public work, or other division of the contract, for which the price is stated separately in the contract, payment shall be made for the completed work without retention of a percentage.

(f) Title, liability, and reservation of rights. All material and work covered by progress payments made shall, at the time of payment, become the sole property of the Government, but this shall not be construed as--

(1) Relieving the Contractor from the sole responsibility for all material and work upon which payments have been made or the restoration of any damaged work; or

(2) Waiving the right of the Government to require the fulfillment of all of the terms of the contract.

(g) Reimbursement for bond premiums. In making these progress payments, the Government shall, upon request, reimburse the Contractor for the amount of premiums paid for performance and payment bonds (including coinsurance and reinsurance agreements, when applicable) after the Contractor has furnished evidence of full payment to the surety. The retainage provisions in paragraph (e) of this clause shall not apply to that portion of progress payments attributable to bond premiums.

(h) Final payment. The Government shall pay the amount due the Contractor under this contract after--

(1) Completion and acceptance of all work;

(2) Presentation of a properly executed voucher; and

(3) Presentation of release of all claims against the Government arising by virtue of this contract, other than claims, in stated amounts, that the Contractor has specifically excepted from the operation of the release. A release may also be required of the assignee if the Contractor's claim to amounts payable under this contract has been assigned under the Assignment of Claims Act of 1940 (31 U.S.C. 3727 and 41 U.S.C. 15).

(i) Limitation because of undefinitized work. Notwithstanding any provision of this contract, progress payments shall not exceed 80 percent on work accomplished on undefinitized contract actions. A "contract action" is any action resulting in a contract, as defined in FAR Subpart 2.1, including contract modifications for additional supplies or services, but not including contract modifications that are within the scope and under the terms of the contract, such as contract modifications issued pursuant to the Changes clause, or funding and other administrative changes.

(j) Interest computation on unearned amounts. In accordance with 31 U.S.C. 3903(c)(1), the amount payable under subparagraph (d)(2) of this clause shall be--

(1) Computed at the rate of average bond equivalent rates of 91-day Treasury bills auctioned at the most recent auction of such bills prior to the date the Contractor receives the unearned amount; and

(2) Deducted from the next available payment to the Contractor.

(End of clause)

62 52.232-17 INTEREST (JUN 1996)

(a) Except as otherwise provided in this contract under a Price Reduction for Defective Cost or Pricing Data clause or a Cost Accounting Standards clause, all amounts that become payable by the Contractor to the Government under this contract (net of any applicable tax credit under the Internal Revenue Code (26 U.S.C. 1481)) shall bear simple interest from the date due until paid unless paid within 30 days of becoming due. The interest rate shall be the interest rate established by the Secretary of the Treasury as

provided in Section 12 of the Contract Disputes Act of 1978 (Public Law 95-563), which is applicable to the period in which the amount becomes due, as provided in paragraph (b) of this clause, and then at the rate applicable for each six-month period as fixed by the Secretary until the amount is paid.

(b) Amounts shall be due at the earliest of the following dates:

(1) The date fixed under this contract.

(2) The date of the first written demand for payment consistent with this contract, including any demand resulting from a default termination.

(3) The date the Government transmits to the Contractor a proposed supplemental agreement to confirm completed negotiations establishing the amount of debt.

(4) If this contract provides for revision of prices, the date of written notice to the Contractor stating the amount of refund payable in connection with a pricing proposal or a negotiated pricing agreement not confirmed by contract modification.

(c) The interest charge made under this clause may be reduced under the procedures prescribed in 32.614-2 of the Federal Acquisition Regulation in effect on the date of this contract.

(End of clause)

63 52.232-23 ASSIGNMENT OF CLAIMS (JAN 1986)

(a) The Contractor, under the Assignment of Claims Act, as amended, 31 U.S.C. 3727, 41 U.S.C. 15 (hereafter referred to as "the Act"), may assign its rights to be paid amounts due or to become due as a result of the performance of this contract to a bank, trust company, or other financing institution, including any Federal lending agency. The assignee under such an assignment may thereafter further assign or reassign its right under the original assignment to any type of financing institution described in the preceding sentence.

(b) Any assignment or reassignment authorized under the Act and this clause shall cover all unpaid amounts payable under this contract, and shall not be made to more than one party, except that an assignment or reassignment may be made to one party as agent or trustee for two or more parties participating in the financing of this contract.

(c) The Contractor shall not furnish or disclose to any assignee under this contract any classified document (including this contract) or information related to work under this contract until the Contracting Officer authorizes such action in writing.

(End of clause)

64 52.232-27 PROMPT PAYMENT FOR CONSTRUCTION CONTRACTS (JUN 1997)

Notwithstanding any other payment terms in this contract, the Government will make invoice payments and contract financing payments under the terms and conditions specified in this clause. Payment shall be considered as being made on the day a check is dated or the date of an electronic funds transfer. Definitions of pertinent terms are set forth in section 32.902 of the Federal Acquisition Regulation. All days referred to in this clause are calendar days, unless otherwise specified. (However, see subparagraph (a)(3) concerning payments due on Saturdays, Sundays, and legal holidays.)

(a) Invoice payments--

(1) Types of invoice payments. For purposes of this clause, there are

several types of invoice payments that may occur under this contract, as follows:

(i) Progress payments, if provided for elsewhere in this contract, based on Contracting Officer approval of the estimated amount and value of work or services performed, including payments for reaching milestones in any project:

(A) The due date for making such payments shall be 14 days after receipt of the payment request by the designated billing office. If the designated billing office fails to annotate the payment request with the actual date of receipt at the time of receipt, the payment due date shall be the 14th day after the date of the Contractor's payment request, provided a proper payment request is received and there is no disagreement over quantity, quality, or Contractor compliance with contract requirements.

(B) The due date for payment of any amounts retained by the Contracting Officer in accordance with the clause at 52.232-5, Payments Under Fixed-Price Construction Contracts, shall be as specified in the contract or, if not specified, 30 days after approval for release to the Contractor by the Contracting Officer.

(ii) Final payments based on completion and acceptance of all work and presentation of release of all claims against the Government arising by virtue of the contract, and payments for partial deliveries that have been accepted by the Government (e.g., each separate building, public work, or other division of the contract for which the price is stated separately in the contract):

(A) The due date for making such payments shall be either the 30th day after receipt by the designated billing office of a proper invoice from the Contractor, or the 30th day after Government acceptance of the work or services completed by the Contractor, whichever is later. If the designated billing office fails to annotate the invoice with the date of actual receipt at the time of receipt, the invoice payment due date shall be the 30th day after the date of the Contractor's invoice, provided a proper invoice is received and there is no disagreement over quantity, quality, or Contractor compliance with contract requirements.

(B) On a final invoice where the payment amount is subject to contract settlement actions (e.g., release of claims), acceptance shall be deemed to have occurred on the effective date of the contract settlement.

(2) Contractor's invoice. The Contractor shall prepare and submit invoices to the designated billing office specified in the contract. A proper invoice must include the items listed in paragraphs (a)(2)(i) through (a)(2)(ix) of this clause. If the invoice does not comply with these requirements, it shall be returned within 7 days after the date the designated billing office received the invoice, with a statement of the reasons why it is not a proper invoice. Untimely notification will be taken into account in computing any interest penalty owed the Contractor in the manner described in subparagraph (a)(4) of this clause.

(i) Name and address of the Contractor.

(ii) Invoice date. (The Contractor is encouraged to date invoices as close as possible to the date of mailing or transmission.)

(iii) Contract number or other authorization for work or services performed (including order number and contract line item number).

(iv) Description of work or services performed.

(v) Delivery and payment terms (e.g., prompt payment discount terms).

(vi) Name and address of Contractor official to whom payment is to be sent (must be the same as that in the contract or in a proper notice of

assignment).

(vii) Name (where practicable), title, phone number, and mailing address of person to be notified in the event of a defective invoice.

(viii) For payments described in paragraph (a)(1)(i) of this clause, substantiation of the amounts requested and certification in accordance with the requirements of the clause at 52.232-5, Payments Under Fixed-Price Construction Contracts.

(ix) Any other information or documentation required by the contract.

(x) While not required, the Contractor is strongly encouraged to assign an identification number to each invoice.

(3) Interest penalty. An interest penalty shall be paid automatically by the designated payment office, without request from the Contractor, if payment is not made by the due date and the conditions listed in paragraphs (a)(3)(i) through (a)(3)(iii) of this clause are met, if applicable. However, when the due date falls on a Saturday, Sunday, or legal holiday when Federal Government offices are closed and Government business is not expected to be conducted, payment may be made on the following business day without incurring a late payment interest penalty.

(i) A proper invoice was received by the designated billing office.

(ii) A receiving report or other Government documentation authorizing payment was processed and there was no disagreement over quantity, quality, Contractor compliance with any contract term or condition, or requested progress payment amount.

(iii) In the case of a final invoice for any balance of funds due the Contractor for work or services performed, the amount was not subject to further contract settlement actions between the Government and the Contractor.

(4) Computing penalty amount. The interest penalty shall be at the rate established by the Secretary of the Treasury under section 12 of the Contract Disputes Act of 1978 (41 U.S.C. 611) that is in effect on the day after the due date, except where the interest penalty is prescribed by other governmental authority (e.g., tariffs). This rate is referred to as the "Renegotiation Board Interest Rate," and it is published in the Federal Register semiannually on or about January 1 and July 1. The interest penalty shall accrue daily on the invoice principal payment amount approved by the Government until the payment date of such approved principal amount; and will be compounded in 30-day increments inclusive from the first day after the due date through the payment date. That is, interest accrued at the end of any 30-day period will be added to the approved invoice principal payment amount and will be subject to interest penalties if not paid in the succeeding 30-day period. If the designated billing office failed to notify the Contractor of a defective invoice within the periods prescribed in subparagraph (a)(2) of this clause, the due date on the corrected invoice will be adjusted by subtracting from such date the number of days taken beyond the prescribed notification of defects period. Any interest penalty owed the Contractor will be based on this adjusted due date. Adjustments will be made by the designated payment office for errors in calculating interest penalties.

(i) For the sole purpose of computing an interest penalty that might be due the Contractor for payments described in paragraph (a)(1)(ii) of this clause, Government acceptance or approval shall be deemed to have occurred constructively on the 7th day after the Contractor has completed the work or services in accordance with the terms and conditions of the contract. In the event that actual acceptance or approval occurs within the constructive acceptance or approval period, the determination of an interest penalty shall be based on the actual date of acceptance or approval. Constructive acceptance or

constructive approval requirements do not apply if there is a disagreement over quantity, quality, or Contractor compliance with a contract provision. These requirements also do not compel Government officials to accept work or services, approve Contractor estimates, perform contract administration functions, or make payment prior to fulfilling their responsibilities.

(ii) The following periods of time will not be included in the determination of an interest penalty:

(A) The period taken to notify the Contractor of defects in invoices submitted to the Government, but this may not exceed 7 days.

(B) The period between the defects notice and resubmission of the corrected invoice by the Contractor.

(C) For incorrect electronic funds transfer (EFT) information, in accordance with the EFT clause of this contract.

(iii) Interest penalties will not continue to accrue after the filing of a claim for such penalties under the clause at 52.233-1, Disputes, or for more than 1 year. Interest penalties of less than $1 need not be paid.

(iv) Interest penalties are not required on payment delays due to disagreement between the Government and the Contractor over the payment amount or other issues involving contract compliance, or on amounts temporarily withheld or retained in accordance with the terms of the contract. Claims involving disputes, and any interest that may be payable, will be resolved in accordance with the clause at 52.233-1, Disputes.

(5) Prompt payment discounts. An interest penalty also shall be paid automatically by the designated payment office, without request from the Contractor, if a discount for prompt payment is taken improperly. The interest penalty will be calculated on the amount of discount taken for the period beginning with the first day after the end of the discount period through the date when the Contractor is paid.

(6) Additional interest penalty.

(i) A penalty amount, calculated in accordance with subdivision (a)(6)(iii) of this clause, shall be paid in addition to the interest penalty amount if the Contractor--

(A) Is owed an interest penalty of $1 or more;

(B) Is not paid the interest penalty within 10 days after the date the invoice amount is paid; and

(C) Makes a written demand to the designated payment office for additional penalty payment, in accordance with subdivision (a)(6)(ii) of this clause, postmarked not later than 40 days after the date the invoice amount is paid.

(ii)(A) Contractors shall support written demands for additional penalty payments with the following data. No additional data shall be required. Contractors shall--

(1) Specifically assert that late payment interest is due under a specific invoice, and request payment of all overdue late payment interest penalty and such additional penalty as may be required;

(2) Attach a copy of the invoice on which the unpaid late payment interest was due; and

(3) State that payment of the principal has been received, including the date of receipt.

(B) Demands must be postmarked on or before the 40th day after payment was made, except that--

(1) If the postmark is illegible or nonexistent, the demand must have been received and annotated with the date of receipt by the designated payment office on or before the 40th day after payment

was made; or

(2) If the postmark is illegible or nonexistent and the designated payment office fails to make the required annotation, the demand's validity will be determined by the date the Contractor has placed on the demand; provided such date is no later than the 40th day after payment was made.

(iii)(A) The additional penalty shall be equal to 100 percent of any original late payment interest penalty, except--

(1) The additional penalty shall not exceed $5,000;

(2) The additional penalty shall never be less than $25; and

(3) No additional penalty is owed if the amount of the underlying interest penalty is less than $1.

(B) If the interest penalty ceases to accrue in accordance with the limits stated in subdivision (a)(4)(iii) of this clause, the amount of the additional penalty shall be calculated on the amount of interest penalty that would have accrued in the absence of these limits, subject to the overall limits on the additional penalty specified in subdivision (a)(6)(iii)(A) of this clause.

(C) For determining the maximum and minimum additional penalties, the test shall be the interest penalty due on each separate payment made for each separate contract. The maximum and minimum additional penalty shall not be based upon individual invoices unless the invoices are paid separately. Where payments are consolidated for disbursing purposes, the maximum and minimum additional penalty determination shall be made separately for each contract therein.

(D) The additional penalty does not apply to payments regulated by other Government regulations (e.g., payments under utility contracts subject to tariffs and regulation).

(b) Contract financing payments--

(1) Due dates for recurring financing payments. If this contract provides for contract financing, requests for payment shall be submitted to the designated billing office as specified in this contract or as directed by the Contracting Officer. Contract financing payments shall be made on the _____ day after receipt of a proper contract financing request by the designated billing office. In the event that an audit or other review of a specific financing request is required to ensure compliance with the terms and conditions of the contract, the designated payment office is not compelled to make payment by the due date specified.

(2) Due dates for other contract financing. For advance payments, loans, or other arrangements that do not involve recurring submissions of contract financing requests, payment shall be made in accordance with the corresponding contract terms or as directed by the Contracting Officer.

(3) Interest penalty not applicable. Contract financing payments shall not be assessed an interest penalty for payment delays.

(c) Subcontract clause requirements. The Contractor shall include in each subcontract for property or services (including a material supplier) for the purpose of performing this contract the following:

(1) Prompt payment for subcontractors. A payment clause that obligates the Contractor to pay the subcontractor for satisfactory performance under its subcontract not later than 7 days from receipt of payment out of such amounts as are paid to the Contractor under this contract.

(2) Interest for subcontractors. An interest penalty clause that obligates the Contractor to pay to the subcontractor an interest penalty for each payment not made in accordance with the payment clause--

(i) For the period beginning on the day after the required payment date and ending on the date on which payment of the amount due is made;

and

(ii) Computed at the rate of interest established by the Secretary of the Treasury, and published in the Federal Register, for interest payments under section 12 of the Contract Disputes Act of 1978 (41 U.S.C. 611) in effect at the time the Contractor accrues the obligation to pay an interest penalty.

(3) Subcontractor clause flowdown. A clause requiring each subcontractor to include a payment clause and an interest penalty clause conforming to the standards set forth in subparagraphs (c)(1) and (c)(2) of this clause in each of its subcontracts, and to require each of its subcontractors to include such clauses in their subcontracts with each lower-tier subcontractor or supplier.

(d) Subcontract clause interpretation. The clauses required by paragraph (c) of this clause shall not be construed to impair the right of the Contractor or a subcontractor at any tier to negotiate, and to include in their subcontract, provisions that--

(1) Retainage permitted. Permit the Contractor or a subcontractor to retain (without cause) a specified percentage of each progress payment otherwise due to a subcontractor for satisfactory performance under the subcontract without incurring any obligation to pay a late payment interest penalty, in accordance with terms and conditions agreed to by the parties to the subcontract, giving such recognition as the parties deem appropriate to the ability of a subcontractor to furnish a performance bond and a payment bond;

(2) Withholding permitted. Permit the Contractor or subcontractor to make a determination that part or all of the subcontractor's request for payment may be withheld in accordance with the subcontract agreement; and

(3) Withholding requirements. Permit such withholding without incurring any obligation to pay a late payment penalty if--

(i) A notice conforming to the standards of paragraph (g) of this clause previously has been furnished to the subcontractor; and

(ii) A copy of any notice issued by a Contractor pursuant to subdivision (d)(3)(i) of this clause has been furnished to the Contracting Officer.

(e) Subcontractor withholding procedures. If a Contractor, after making a request for payment to the Government but before making a payment to a subcontractor for the subcontractor's performance covered by the payment request, discovers that all or a portion of the payment otherwise due such subcontractor is subject to withholding from the subcontractor in accordance with the subcontract agreement, then the Contractor shall--

(1) Subcontractor notice. Furnish to the subcontractor a notice conforming to the standards of paragraph (g) of this clause as soon as practicable upon ascertaining the cause giving rise to a withholding, but prior to the due date for subcontractor payment;

(2) Contracting Officer notice. Furnish to the Contracting Officer, as soon as practicable, a copy of the notice furnished to the subcontractor pursuant to subparagraph (e)(1) of this clause;

(3) Subcontractor progress payment reduction. Reduce the subcontractor's progress payment by an amount not to exceed the amount specified in the notice of withholding furnished under subparagraph (e)(1) of this clause;

(4) Subsequent subcontractor payment. Pay the subcontractor as soon as practicable after the correction of the identified subcontract performance deficiency, and--

(i) Make such payment within--

(A) Seven days after correction of the identified subcontract performance deficiency (unless the funds therefor must be recovered

from the Government because of a reduction under paragraph (e)(5)(i)) of this clause; or

(B) Seven days after the Contractor recovers such funds from the Government; or

(ii) Incur an obligation to pay a late payment interest penalty computed at the rate of interest established by the Secretary of the Treasury, and published in the Federal Register, for interest payments under section 12 of the Contracts Disputes Act of 1978 (41 U.S.C. 611) in effect at the time the Contractor accrues the obligation to pay an interest penalty;

(5) Notice to Contracting Officer. Notify the Contracting Officer upon--

(i) Reduction of the amount of any subsequent certified application for payment; or

(ii) Payment to the subcontractor of any withheld amounts of a progress payment, specifying--

(A) The amounts withheld under subparagraph (e)(1) of this clause; and

(B) The dates that such withholding began and ended; and

(6) Interest to Government. Be obligated to pay to the Government an amount equal to interest on the withheld payments (computed in the manner provided in 31 U.S.C. 3903(c)(1)), from the 8th day after receipt of the withheld amounts from the Government until--

(i) The day the identified subcontractor performance deficiency is corrected; or

(ii) The date that any subsequent payment is reduced under subdivision (e)(5)(i) of this clause.

(f) Third-party deficiency reports--

(1) Withholding from subcontractor. If a Contractor, after making payment to a first-tier subcontractor, receives from a supplier or subcontractor of the first-tier subcontractor (hereafter referred to as a "second-tier subcontractor") a written notice in accordance with section 2 of the Act of August 24, 1935 (40 U.S.C. 270b, Miller Act), asserting a deficiency in such first-tier subcontractor's performance under the contract for which the Contractor may be ultimately liable, and the Contractor determines that all or a portion of future payments otherwise due such first-tier subcontractor is subject to withholding in accordance with the subcontract agreement, the Contractor may, without incurring an obligation to pay an interest penalty under subparagraph (e)(6) of this clause--

(i) Furnish to the first-tier subcontractor a notice conforming to the standards of paragraph (g) of this clause as soon as practicable upon making such determination; and

(ii) Withhold from the first-tier subcontractor's next available progress payment or payments an amount not to exceed the amount specified in the notice of withholding furnished under paragraph (f)(1)(i) of this clause.

(2) Subsequent payment or interest charge. As soon as practicable, but not later than 7 days after receipt of satisfactory written notification that the identified subcontract performance deficiency has been corrected, the Contractor shall--

(i) Pay the amount withheld under paragraph (f)(1)(ii) of this clause to such first-tier subcontractor; or

(ii) Incur an obligation to pay a late payment interest penalty to such first-tier subcontractor computed at the rate of interest established by the Secretary of the Treasury, and published in the Federal Register, for interest payments under section 12 of the

Contracts Disputes Act of 1978 (41 U.S.C. 611) in effect at the time the Contractor accrues the obligation to pay an interest penalty.

(g) Written notice of subcontractor withholding. A written notice of any withholding shall be issued to a subcontractor (with a copy to the Contracting Officer of any such notice issued by the Contractor), specifying--

(1) The amount to be withheld;

(2) The specific causes for the withholding under the terms of the subcontract; and

(3) The remedial actions to be taken by the subcontractor in order to receive payment of the amounts withheld.

(h) Subcontractor payment entitlement. The Contractor may not request payment from the Government of any amount withheld or retained in accordance with paragraph (d) of this clause until such time as the Contractor has determined and certified to the Contracting Officer that the subcontractor is entitled to the payment of such amount.

(i) Prime-subcontractor disputes. A dispute between the Contractor and subcontractor relating to the amount or entitlement of a subcontractor to a payment or a late payment interest penalty under a clause included in the subcontract pursuant to paragraph (c) of this clause does not constitute a dispute to which the United States is a party. The United States may not be interpleaded in any judicial or administrative proceeding involving such a dispute.

(j) Preservation of prime-subcontractor rights. Except as provided in paragraph (i) of this clause, this clause shall not limit or impair any contractual, administrative, or judicial remedies otherwise available to the Contractor or a subcontractor in the event of a dispute involving late payment or nonpayment by the Contractor or deficient subcontract performance or nonperformance by a subcontractor.

(k) Non-recourse for prime contractor interest penalty. The Contractor's obligation to pay an interest penalty to a subcontractor pursuant to the clauses included in a subcontract under paragraph (c) of this clause shall not be construed to be an obligation of the United States for such interest penalty. A cost-reimbursement claim may not include any amount for reimbursement of such interest penalty.

(End of clause)

65 52.232-33 MANDATORY INFORMATION FOR ELECTRONIC FUNDS TRANSFER PAYMENT (AUG 1996)
(Reference 32.1103(a)&)

66 52.232-34 OPTIONAL INFORMATION FOR ELECTRONIC FUNDS TRANSFER PAYMENT (AUG 1996)

(a) Method of payment.

(1) Except as provided in paragraph (a)(2) of this clause, after the Contractor provides the information described in paragraph (d) of this clause, in accordance with paragraph (b) of this clause, payments by the Government under this contract, including invoice and contract financing payments, may be made by check or electronic funds transfer (EFT) at the option of the Government. If payment is made by EFT, the Government may, at its option, also forward the associated payment information by electronic transfer. As used in this clause, the term "EFT" refers to the funds transfer and may also include the information transfer.

(2) Notwithstanding the provision of this clause making the furnishing of EFT information optional, the Contractor shall furnish the EFT

information described in paragraph (d) for any payment to be made after January 1, 1999.

(b) Contractor consent.

(1) If the Contractor is willing to be paid by EFT, the Contractor shall provide the EFT information described in paragraph (d) of this clause. The Contractor agrees that, after providing EFT information in accordance with this clause, the Contractor cannot withdraw the Government's right to make payment by EFT for this contract.

(2) If the Contractor provides EFT information applicable to multiple contracts, the Contractor shall specifically state the applicability of this EFT information in terms acceptable to the payment office.

(c) Contractor's EFT information. Prior to submission of the first request for payment (whether for invoice or contract financing payment) under this contract, for which the Contractor desires EFT payment, the Contractor shall provide the information required to make contract payment by EFT, as described in paragraph (d) of this clause, directly to the Government payment office named in this contract. If more than one payment office is named for the contract, the Contractor shall provide a separate notice to each office. In the event that the EFT information changes, the Contractor shall be responsible for providing the changed information to the designated payment office(s).

(d) Required EFT information. The Government may make payment by EFT through either an Automated Clearing House (ACH) subject to the domestic banking laws of the United States or the Federal Reserve Wire Transfer System at the Government's option. The Contractor shall provide the following information for both methods in a form acceptable to the designated payment office. The Contractor may supply this data for this or multiple contracts (see paragraph (b) of this clause).

(1) The contract number to which this notice applies.

(2) The Contractor's name and remittance address, as stated in the contract, and account number at the Contractor's financial agent.

(3) The signature (manual or electronic, as appropriate), title, and telephone number of the Contractor official authorized to provide this information.

(4) For ACH payment only:

(i) Name, address, and 9-digit Routing Transit Number of the Contractor's financial agent.

(ii) Contractor's account number and the type of account (checking, saving, or lockbox).

(5) For Federal Reserve Wire Transfer System payments only:

(i) Name, address, telegraphic abbreviation, and the 9-digit Routing Transit Number for the Contractor's financial agent.

(ii) If the Contractor's financial agent is not directly on-line to the Federal Reserve Wire Transfer System and, therefore, not the receiver of the wire transfer payment, the Contractor shall also provide the name, address, and 9-digit Routing Transit Number of the correspondent financial institution receiving the wire transfer payment.

(e) Suspension of payment.

(1) Notwithstanding the provisions of any other clause of this contract, if, after receipt of the Contractor's EFT information in accordance with paragraph (b) of this clause, the EFT information is found to be incorrect, or, for payment after January 1, 1999, if EFT information has not been furnished, then until receipt by the designated payment office of the correct EFT information from the Contractor, (i) the Government is not required to make any further payment under this contract; and (ii) any invoice or contract financing request shall be

deemed not to be a valid invoice or contract financing request as defined in the Prompt Payment clause of this contract.

(2) If the EFT information changes after submission of correct EFT information, the Government shall begin using the changed EFT information no later than the 30th day after its receipt to the extent payment is made by EFT. However, the Contractor may request that no further payments be made until the changed EFT information is implemented by the payment office. If such suspension would result in a late payment under the Prompt Payment clause of this contract, the Contractor's request for suspension shall extend the due date for payment by the number of days of the suspension.

(f) Contractor EFT arrangements. The Contractor shall designate a single financial agent capable of receiving and processing the electronic funds transfer using the EFT methods described in paragraph (d) of this clause. The Contractor shall pay all fees and charges for receipt and processing of transfers.

(g) Liability for uncompleted or erroneous transfers.

(1) If an uncompleted or erroneous transfer occurs because the Government failed to use the Contractor-provided EFT information in the correct manner, the Government remains responsible for (i) making a correct payment, (ii) paying any prompt payment penalty due, and (iii) recovering any erroneously directed funds.

(2) If an uncompleted or erroneous transfer occurs because Contractor-provided EFT information was incorrect at the time of Government release of the EFT payment transaction instruction to the Federal Reserve System, and--

(i) If the funds are no longer under the control of the payment office, the Government is deemed to have made payment and the Contractor is responsible for recovery of any erroneously directed funds; or

(ii) If the funds remain under the control of the payment office, the Government retains the right to either make payment by mail or suspend the payment in accordance with paragraph (e) of this clause.

(h) EFT and prompt payment.

(1) A payment shall be deemed to have been made in a timely manner in accordance with the Prompt Payment clause of this contract if, in the EFT payment transaction instruction given to the Federal Reserve System, the date specified for settlement of the payment is on or before the prompt payment due date, provided the specified payment date is a valid date under the rules of the Federal Reserve System.

(2) When payment cannot be made by EFT because of incorrect EFT information provided by the Contractor, no interest penalty is due after the date of the uncompleted or erroneous payment transaction, provided that notice of the defective EFT information is issued to the Contractor within 7 days after the Government is notified of the defective EFT information.

(i) EFT and assignment of claims. If the Contractor assigns the proceeds of this contract as provided for in the Assignment of Claims clause of this contract, the assignee shall provide the assignee EFT information required by paragraph (d) of this clause. In all respects, the requirements of this clause shall apply to the assignee as if it were the Contractor. EFT information which shows the ultimate recipient of the transfer to be other than the Contractor, in the absence of a proper assignment of claims acceptable to the Government, is incorrect EFT information within the meaning of paragraph (e) of this clause.

(j) Payment office discretion. If, after submitting the EFT information,

the Contractor does not wish to receive payment by EFT methods for one or more payments, the Contractor may submit a request to the designated payment office to refrain from using the EFT payment method. The decision to grant the request is solely that of the Government.

(k) Change of EFT information by financial agent. The Contractor agrees that the Contractor's financial agent may notify the Government of a change to the routing transit number, Contractor account number, or account type. The Government shall use the changed data in accordance with paragraph (e)(2) of this clause. The Contractor agrees that the information provided by the agent is deemed to be correct information as if it were provided by the Contractor. The Contractor agrees that the agent's notice of changed EFT data is deemed to be a request by the Contractor in accordance with paragraph (e)(2) that no further payments be made until the changed EFT information is implemented by the payment office.

(End of clause)

67 52.232-7009 PAYMENT BY ELECTRONIC FUNDS TRANSFER (CCR) (JUN 1998)

(a) Method of payment. (1) All payments by the Government under this contract shall be made by electronic funds transfer (EFT), except as provided in paragraph (a)(2) of (b) of this clause. As used in this clause, the term "EFT" refers to the funds transfer and may also include the payment information transfer.

(2) In the event the Government is unable to release one or more payments by EFT, the Contractor agrees to either (i) accept payment by check or some other mutually agreeable method of payment, or (ii) request the Government to extend the payment due date until such time as the Government can make payment by EFT (but see paragraph (e) of this clause).

(b) Alternative contractor certification. If the Contractor certifies in writing, as part of its registration with the Central Contractor Registration (CCR) database that it does not have an account with a financial institution and does not have an authorized payment agent, payment shall be made by check to the remittance address contained in the CCR database. All contractor certifications will expire on January 1, 1999.

(c) Contractor's EFT information. Except as provided in paragraph (b) of this clause, the Government shall make payment to the Contractor using the EFT information contained in the CCR database. In the event that the EFT information changes, the Contractor shall be responsible for providing the updated information to the CCR database.

(d) Mechanisms for EFT payment. The Government may make payment by EFT through either an Automated Clearing House subject to the banking laws of the United States or the Federal Reserve Wire Transfer System.

(e) Suspension of payment. If the Contractor's EFT information in the CCR database is incorrect and the Contractor has not certified under paragraph (b) of this clause, the Government need not make payment to the Contractor under this contract until correct EFT information or certification is entered into the CCR database; and any invoice or contract financing request shall be deemed not to be a proper invoice for the purpose of prompt payment under this contract. The prompt payment terms of the contract regarding notice of an improper invoice and delays in accrual of interest penalties apply.

(f) Contractor EFT arrangements. If the Contractor has

identified multiple payment receiving points (i.e., more than one remittance address or EFT information set) in the CCR database, and the Contractor has not notified the Government of the payment receiving point applicable to this contract, the Government shall make payment to the first payment receiving point (EFT information set or remittance address as applicable) listed in the CCR database.

(g) Liability for uncompleted or erroneous transfers. (1) If an uncompleted or erroneous transfer occurs because the Government failed to use the Contractor's EFT information in the correct manner, the Government remains responsible for--

(i) Making a correct payment;

(ii) Paying any prompt payment penalty due; and

(iii) Recovering any erroneously directed funds.

(2) If an uncompleted or erroneous transfer occurs because the Contractor's EFT information was incorrect, or was revised within 30 days of Government release of the EFT payment transaction instruction to the Federal Reserve System, and--

(i) If the funds are no longer under the control of the payment office, the Government is deemed to have made payment and the contractor is responsible for recovery of any erroneously directed funds; or

(ii) If the funds remain under the control of the payment office, the Government shall not make payment, and the provisions of paragraph (e) of this clause shall apply.

(h) EFT and prompt payment. A payment shall be deemed to have been made in a timely manner in accordance with the prompt payment terms of this contract if, in the EFT payment transaction instruction released to the Federal Reserve System, the date specified for settlement of the payment is on or before the prompt payment due date, provided the specified payment date is a valid date under the rules of the Federal Reserve System.

(i) EFT and assignment of claims. If the Contractor assigns the proceeds of this contract as provided for in the assignment of claims terms of this contract, the Contractor shall require as a condition of any such assignment, that the assignee register in the CCR database and be paid by EFT in accordance with the terms of this clause. In all respects, the requirements of this clause shall apply to the assignee as if it were the Contractor. EFT information that shows the ultimate recipient of the transfer to be other than the Contractor, in the absence of a proper assignment of claims acceptable to the Government, is incorrect EFT information within the meaning of paragraph (e) of this clause.

(j) Liability for change of EFT information by financial agent. The Government is not liable for errors resulting from changes to EFT information made by the Contractor's financial agent.

(k) Payment information. The payment or disbursing office shall forward to the Contractor available payment information that is suitable for transmission as of the date of release of the EFT instruction to the Federal Reserve System. The Government may request the Contractor to designate a desired format and method(s) for delivery of payment information from a list of formats and methods the payment office is capable of executing. However, the Government does not guarantee that any particular format or method of delivery is available at any particular payment office and retains the latitude to use the format and delivery method most convenient to the Government. If the Contractor has certified in accordance with paragraph (b) of this clause or if the Government

otherwise makes payment by check in accordance with paragraph (a) of this clause, the Government shall mail the payment information to the remittance address contained in the CCR database.

(End of clause)

68 52.233-1 I DISPUTES (OCT 1995)--ALTERNATE I (DEC 1991)

(a) This contract is subject to the Contract Disputes Act of 1978, as amended (41 U.S.C. 601-613).

(b) Except as provided in the Act, all disputes arising under or relating to this contract shall be resolved under this clause.

(c) "Claim," as used in this clause, means a written demand or written assertion by one of the contracting parties seeking, as a matter of right, the payment of money in a sum certain, the adjustment or interpretation of contract terms, or other relief arising under or relating to this contract. A claim arising under a contract, unlike a claim relating to that contract, is a claim that can be resolved under a contract clause that provides for the relief sought by the claimant. However, a written demand or written assertion by the Contractor seeking the payment of money exceeding $100,000 is not a claim under the Act until certified as required by subparagraph (d)(2) of this clause. A voucher, invoice, or other routine request for payment that is not in dispute when submitted is not a claim under the Act. The submission may be converted to a claim under the Act, by complying with the submission and certification requirements of this clause, if it is disputed either as to liability or amount or is not acted upon in a reasonable time.

(d)(1) A claim by the Contractor shall be made in writing and, unless otherwise stated in this contract, submitted within 6 years after accrual of the claim to the Contracting Officer for a written decision. A claim by the Government against the Contractor shall be subject to a written decision by the Contracting Officer.

(2)(i) Contractors shall provide the certification specified in subparagraph (d)(2)(iii) of this clause when submitting any claim--

(A) Exceeding $100,000; or

(B) Regardless of the amount claimed, when using--

(1) Arbitration conducted pursuant to 5 U.S.C. 575-580; or

(2) Any other alternative means of dispute resolution (ADR) technique that the agency elects to handle in accordance with the Administrative Dispute Resolution Act (ADRA).

(ii) The certification requirement does not apply to issues in controversy that have not been submitted as all or part of a claim.

(iii) The certification shall state as follows:

"I certify that the claim is made in good faith; that the supporting data are accurate and complete to the best of my knowledge and belief; that the amount requested accurately reflects the contract adjustment for which the Contractor believes the Government is liable; and that I am duty authorized to certify the claim on behalf of the Contractor."

(3) The certification may be executed by any person duly authorized to bind the Contractor with respect to the claim.

(e) For Contractor claims of $100,000 or less, the Contracting Officer must, if requested in writing by the Contractor, render a decision within 60 days of the request. For Contractor-certified claims over $100,000, the Contracting Officer must, within 60 days, decide the claim or notify the Contractor of the date by which the decision will be made.

(f) The Contracting Officer's decision shall be final unless the Contractor appeals or files a suit as provided in the Act.

(g) If the claim by the Contractor is submitted to the Contracting Officer or a claim by the Government is presented to the Contractor, the parties, by mutual consent, may agree to use ADR. If the Contractor refuses an offer for alternative disputes resolution, the Contractor shall inform the Contracting Officer, in writing, of the Contractor's specific reasons for rejecting the request. When using arbitration conducted pursuant to 5 U.S.C. 575-580, or when using any other ADR technique that the agency elects to handle in accordance with the ADRA, any claim, regardless of amount, shall be accompanied by the certification described in subparagraph (d)(2)(iii) of this clause, and executed in accordance with subparagraph (d)(3) of this clause.

(h) The Government shall pay interest on the amount found due and unpaid from (1) the date that the Contracting Officer receives the claim (certified, if required); or (2) the date that payment otherwise would be due, if that date is later, until the date of payment. With regard to claims having defective certifications, as defined in (FAR) 48 CFR 33.201, interest shall be paid from the date that the Contracting Officer initially receives the claim. Simple interest on claims shall be paid at the rate, fixed by the Secretary of the Treasury as provided in the Act, which is applicable to the period during which the Contracting Officer receives the claim and then at the rate applicable for each 6-month period as fixed by the Treasury Secretary during the pendency of the claim.

(i) The Contractor shall proceed diligently with performance of this contract, pending final resolution of any request for relief, claim, appeal, or action arising under or relating to the contract, and comply with any decision of the Contracting Officer.

(End of clause)

69 52.233-3 PROTEST AFTER AWARD (AUG 1996)

(a) Upon receipt of a notice of protest (as defined in FAR 33.101) or a determination that a protest is likely (see FAR 33.102(d)), the Contracting Officer may, by written order to the Contractor, direct the Contractor to stop performance of the work called for by this contract. The order shall be specifically identified as a stop-work order issued under this clause. Upon receipt of the order, the Contractor shall immediately comply with its terms and take all reasonable steps to minimize the incurrence of costs allocable to the work covered by the order during the period of work stoppage. Upon receipt of the final decision in the protest, the Contracting Officer shall either--

(1) Cancel the stop-work order; or

(2) Terminate the work covered by the order as provided in the Default, or the Termination for Convenience of the Government, clause of this contract.

(b) If a stop-work order issued under this clause is canceled either before or after a final decision in the protest, the Contractor shall resume work. The Contracting Officer shall make an equitable adjustment in the delivery schedule or contract price, or both, and the contract shall be modified, in writing, accordingly, if--

(1) The stop-work order results in an increase in the time required for, or in the Contractor's cost properly allocable to, the performance of any part of this contract; and

(2) The Contractor asserts its right to an adjustment within 30 days after the end of the period of work stoppage; provided, that if the Contracting Officer decides the facts justify the action, the Contracting Officer may receive and act upon a proposal at any time before final

payment under this contract.

(c) If a stop-work order is not canceled and the work covered by the order is terminated for the convenience of the Government, the Contracting Officer shall allow reasonable costs resulting from the stop-work order in arriving at the termination settlement.

(d) If a stop-work order is not canceled and the work covered by the order is terminated for default, the Contracting Officer shall allow, by equitable adjustment or otherwise, reasonable costs resulting from the stop-work order.

(e) The Government's rights to terminate this contract at any time are not affected by action taken under this clause.

(f) If, as the result of the Contractor's intentional or negligent misstatement, misrepresentation, or miscertification, a protest related to this contract is sustained, and the Government pays costs, as provided in FAR 33.102(b)(2) or 33.104(h)(1), the Government may require the Contractor to reimburse the Government the amount of such costs. In addition to any other remedy available, and pursuant to the requirements of Subpart 32.6, the Government may collect this debt by offsetting the amount against any payment due the Contractor under any contract between the Contractor and the Government.

(End of clause)

70 52.236-2 DIFFERING SITE CONDITIONS (APR 1984)

(a) The Contractor shall promptly, and before the conditions are disturbed, give a written notice to the Contracting Officer of (1) subsurface or latent physical conditions at the site which differ materially from those indicated in this contract, or (2) unknown physical conditions at the site, of an unusual nature, which differ materially from those ordinarily encountered and generally recognized as inhering in work of the character provided for in the contract.

(b) The Contracting Officer shall investigate the site conditions promptly after receiving the notice. If the conditions do materially so differ and cause an increase or decrease in the Contractor's cost of, or the time required for, performing any part of the work under this contract, whether or not changed as a result of the conditions, an equitable adjustment shall be made under this clause and the contract modified in writing accordingly.

(c) No request by the Contractor for an equitable adjustment to the contract under this clause shall be allowed, unless the Contractor has given the written notice required; provided, that the time prescribed in (a) above for giving written notice may be extended by the Contracting Officer.

(d) No request by the Contractor for an equitable adjustment to the contract for differing site conditions shall be allowed if made after final payment under this contract.

(End of clause)

71 52.236-3 SITE INVESTIGATION AND CONDITIONS AFFECTING THE WORK (APR 1984)

(a) The Contractor acknowledges that it has taken steps reasonably necessary to ascertain the nature and location of the work, and that it has investigated and satisfied itself as to the general and local conditions which can affect the work or its cost, including but not

limited to (1) conditions bearing upon transportation, disposal, handling, and storage of materials; (2) the availability of labor, water, electric power, and roads; (3) uncertainties of weather, river stages, tides, or similar physical conditions at the site; (4) the conformation and conditions of the ground; and (5) the character of equipment and facilities needed preliminary to and during work performance. The Contractor also acknowledges that it has satisfied itself as to the character, quality, and quantity of surface and subsurface materials or obstacles to be encountered insofar as this information is reasonably ascertainable from an inspection of the site, including all exploratory work done by the Government, as well as from the drawings and specifications made a part of this contract. Any failure of the Contractor to take the actions described and acknowledged in this paragraph will not relieve the Contractor from responsibility for estimating properly the difficulty and cost of successfully performing the work, or for proceeding to successfully perform the work without additional expense to the Government.

(b) The Government assumes no responsibility for any conclusions or interpretations made by the Contractor based on the information made available by the Government. Nor does the Government assume responsibility for any understanding reached or representation made concerning conditions which can affect the work by any of its officers or agents before the execution of this contract, unless that understanding or representation is expressly stated in this contract.

(End of clause)

72 52.236-5 MATERIAL AND WORKMANSHIP (APR 1984)

(a) All equipment, material, and articles incorporated into the work covered by this contract shall be new and of the most suitable grade for the purpose intended, unless otherwise specifically provided in this contract. References in the specifications to equipment, material, articles, or patented processes by trade name, make, or catalog number, shall be regarded as establishing a standard of quality and shall not be construed as limiting competition. The Contractor may, at its option, use any equipment, material, article, or process that, in the judgment of the Contracting Officer, is equal to that named in the specifications, unless otherwise specifically provided in this contract.

(b) The Contractor shall obtain the Contracting Officer's approval of the machinery and mechanical and other equipment to be incorporated into the work. When requesting approval, the Contractor shall furnish to the Contracting Officer the name of the manufacturer, the model number, and other information concerning the performance, capacity, nature, and rating of the machinery and mechanical and other equipment. When required by this contract or by the Contracting Officer, the Contractor shall also obtain the Contracting Officer's approval of the material or articles which the Contractor contemplates incorporating into the work. When requesting approval, the Contractor shall provide full information concerning the material or articles. When directed to do so, the Contractor shall submit samples for approval at the Contractor's expense, with all shipping charges prepaid. Machinery, equipment, material, and articles that do not have the required approval shall be installed or used at the risk of subsequent rejection.

(c) All work under this contract shall be performed in a skillful and workmanlike manner. The Contracting Officer may require, in writing, that the Contractor remove from the work any employee the Contracting

Officer deems incompetent, careless, or otherwise objectionable.
(End of clause)
(R 7-602.9 1964 JUN)

73 52.236-6 SUPERINTENDENCE BY THE CONTRACTOR (APR 1984)

At all times during performance of this contract and until the work is completed and accepted, the Contractor shall directly superintend the work or assign and have on the work site a competent superintendent who is satisfactory to the Contracting Officer and has authority to act for the Contractor.
(End of clause)

74 52.236-7 PERMITS AND RESPONSIBILITIES (NOV 1991)

The Contractor shall, without additional expense to the Government, be responsible for obtaining any necessary licenses and permits, and for complying with any Federal, State, and municipal laws, codes, and regulations applicable to the performance of the work. The Contractor shall also be responsible for all damages to persons or property that occur as a result of the Contractor's fault or negligence. The Contractor shall also be responsible for all materials delivered and work performed until completion and acceptance of the entire work, except for any completed unit of work which may have been accepted under the contract.
(End of clause)

75 52.236-8 OTHER CONTRACTS (APR 1984)

The Government may undertake or award other contracts for additional work at or near the site of the work under this contract. The Contractor shall fully cooperate with the other contractors and with Government employees and shall carefully adapt scheduling and performing the work under this contract to accommodate the additional work, heeding any direction that may be provided by the Contracting Officer. The Contractor shall not commit or permit any act that will interfere with the performance of work by any other contractor or by Government employees.
(End of clause)

76 52.236-9 PROTECTION OF EXISTING VEGETATION, STRUCTURES, EQUIPMENT, UTILITIES, AND IMPROVEMENTS (APR 1984)

(a) The Contractor shall preserve and protect all structures, equipment, and vegetation (such as trees, shrubs, and grass) on or adjacent to the work site, which are not to be removed and which do not unreasonably interfere with the work required under this contract. The Contractor shall only remove trees when specifically authorized to do so, and shall avoid damaging vegetation that will remain in place. If any limbs or branches of trees are broken during contract performance, or by the careless operation of equipment, or by workmen, the Contractor shall trim those limbs or branches with a clean cut and paint the cut with a tree-pruning compound as directed by the Contracting Officer.

(b) The Contractor shall protect from damage all existing improvements and utilities (1) at or near the work site, and (2) on adjacent property of a third party, the locations of which are made known to or should be known by the Contractor. The Contractor shall repair any damage to those

facilities, including those that are the property of a third party, resulting from failure to comply with the requirements of this contract or failure to exercise reasonable care in performing the work. If the Contractor fails or refuses to repair the damage promptly, the Contracting Officer may have the necessary work performed and charge the cost to the Contractor.

(End of clause)

77 52.236-10 OPERATIONS AND STORAGE AREAS (APR 1984)

(a) The Contractor shall confine all operations (including storage of materials) on Government premises to areas authorized or approved by the Contracting Officer. The Contractor shall hold and save the Government, its officers and agents, free and harmless from liability of any nature occasioned by the Contractor's performance.

(b) Temporary buildings (e.g., storage sheds, shops, offices) and utilities may be erected by the Contractor only with the approval of the Contracting Officer and shall be built with labor and materials furnished by the Contractor without expense to the Government. The temporary buildings and utilities shall remain the property of the Contractor and shall be removed by the Contractor at its expense upon completion of the work. With the written consent of the Contracting Officer, the buildings and utilities may be abandoned and need not be removed.

(c) The Contractor shall, under regulations prescribed by the Contracting Officer, use only established roadways, or use temporary roadways constructed by the Contractor when and as authorized by the Contracting Officer. When materials are transported in prosecuting the work, vehicles shall not be loaded beyond the loading capacity recommended by the manufacturer of the vehicle or prescribed by any Federal, State, or local law or regulation. When it is necessary to cross curbs or sidewalks, the Contractor shall protect them from damage. The Contractor shall repair or pay for the repair of any damaged curbs, sidewalks, or roads.

(End of clause)

78 52.236-11 USE AND POSSESSION PRIOR TO COMPLETION (APR 1984)

(a) The Government shall have the right to take possession of or use any completed or partially completed part of the work. Before taking possession of or using any work, the Contracting Officer shall furnish the Contractor a list of items of work remaining to be performed or corrected on those portions of the work that the Government intends to take possession of or use. However, failure of the Contracting Officer to list any item of work shall not relieve the Contractor of responsibility for complying with the terms of the contract. The Government's possession or use shall not be deemed an acceptance of any work under the contract.

(b) While the Government has such possession or use, the Contractor shall be relieved of the responsibility for the loss of or damage to the work resulting from the Government's possession or use, notwithstanding the terms of the clause in this contract entitled "Permits and Responsibilities." If prior possession or use by the Government delays the progress of the work or causes additional expense to the Contractor, an equitable adjustment shall be made in the contract price or the time of completion, and the contract shall be modified in writing accordingly.

(End of clause)

79 52.236-12 CLEANING UP (APR 1984)

The Contractor shall at all times keep the work area, including storage areas, free from accumulations of waste materials. Before completing the work, the Contractor shall remove from the work and premises any rubbish, tools, scaffolding, equipment, and materials that are not the property of the Government. Upon completing the work, the Contractor shall leave the work area in a clean, neat, and orderly condition satisfactory to the Contracting Officer.

(End of clause)

80 52.236-13 ACCIDENT PREVENTION (NOV 1991)

(a) The Contractor shall provide and maintain work environments and procedures which will (1) safeguard the public and Government personnel, property, materials, supplies, and equipment exposed to Contractor operations and activities; (2) avoid interruptions of Government operations and delays in project completion dates; and (3) control costs in the performance of this contract.

(b) For these purposes on contracts for construction or dismantling, demolition, or removal of improvements, the Contractor shall--

(1) Provide appropriate safety barricades, signs, and signal lights;

(2) Comply with the standards issued by the Secretary of Labor at 29 CFR Part 1926 and 29 CFR Part 1910; and

(3) Ensure that any additional measures the Contracting Officer determines to be reasonably necessary for the purposes are taken.

(c) If this contract is for construction or dismantling, demolition or removal of improvements with any Department of Defense agency or component, the Contractor shall comply with all pertinent provisions of the latest version of U.S. Army Corps of Engineers Safety and Health Requirements Manual, EM 385-1-1, in effect on the date of the solicitation.

(d) Whenever the Contracting Officer becomes aware of any noncompliance with these requirements or any condition which poses a serious or imminent danger to the health or safety of the public or Government personnel, the Contracting Officer shall notify the Contractor orally, with written confirmation, and request immediate initiation of corrective action. This notice, when delivered to the Contractor or the Contractor's representative at the work site, shall be deemed sufficient notice of the noncompliance and that corrective action is required. After receiving the notice, the Contractor shall immediately take corrective action. If the Contractor fails or refuses to promptly take corrective action, the Contracting Officer may issue an order stopping all or part of the work until satisfactory corrective action has been taken. The Contractor shall not be entitled to any equitable adjustment of the contract price or extension of the performance schedule on any stop work order issued under this clause.

(e) The Contractor shall insert this clause, including this paragraph (e), with appropriate changes in the designation of the parties, in subcontracts.

(End of clause)

81 52.236-14 AVAILABILITY AND USE OF UTILITY SERVICES (APR 1984)

(a) The Government shall make all reasonably required amounts of utilities available to the Contractor from existing outlets and supplies, as specified in the contract. Unless otherwise provided in the contract,

the amount of each utility service consumed shall be charged to or paid for by the Contractor at prevailing rates charged to the Government or, where the utility is produced by the Government, at reasonable rates determined by the Contracting Officer. The Contractor shall carefully conserve any utilities furnished without charge.

(b) The Contractor, at its expense and in a workmanlike manner satisfactory to the Contracting Officer, shall install and maintain all necessary temporary connections and distribution lines, and all meters required to measure the amount of each utility used for the purpose of determining charges. Before final acceptance of the work by the Government, the Contractor shall remove all the temporary connections, distribution lines, meters, and associated paraphernalia.

(End of clause)

(R 7-603.30 1967 APR)

(R 7-2102.4 1976 OCT)

82 52.236-15 SCHEDULES FOR CONSTRUCTION CONTRACTS (APR 1984)

(a) The Contractor shall, within five days after the work commences on the contract or another period of time determined by the Contracting Officer, prepare and submit to the Contracting Officer for approval three copies of a practicable schedule showing the order in which the Contractor proposes to perform the work, and the dates on which the Contractor contemplates starting and completing the several salient features of the work (including acquiring materials, plant, and equipment). The schedule shall be in the form of a progress chart of suitable scale to indicate appropriately the percentage of work scheduled for completion by any given date during the period. If the Contractor fails to submit a schedule within the time prescribed, the Contracting Officer may withhold approval of progress payments until the Contractor submits the required schedule.

(b) The Contractor shall enter the actual progress on the chart as directed by the Contracting Officer, and upon doing so shall immediately deliver three copies of the annotated schedule to the Contracting Officer. If, in the opinion of the Contracting Officer, the Contractor falls behind the approved schedule, the Contractor shall take steps necessary to improve its progress, including those that may be required by the Contracting Officer, without additional cost to the Government. In this circumstance, the Contracting Officer may require the Contractor to increase the number of shifts, overtime operations, days of work, and/or the amount of construction plant, and to submit for approval any supplementary schedule or schedules in chart form as the Contracting Officer deems necessary to demonstrate how the approved rate of progress will be regained.

(c) Failure of the Contractor to comply with the requirements of the Contracting Officer under this clause shall be grounds for a determination by the Contracting Officer that the Contractor is not prosecuting the work with sufficient diligence to ensure completion within the time specified in the contract. Upon making this determination, the Contracting Officer may terminate the Contractor's right to proceed with the work, or any separable part of it, in accordance with the default terms of this contract.

(End of clause)

83 52.236-21 SPECIFICATIONS AND DRAWINGS FOR CONSTRUCTION (FEB 1997)

(a) The Contractor shall keep on the work site a copy of the drawings and specifications and shall at all times give the Contracting Officer

access thereto. Anything mentioned in the specifications and not shown on the drawings, or shown on the drawings and not mentioned in the specifications, shall be of like effect as if shown or mentioned in both. In case of difference between drawings and specifications, the specifications shall govern. In case of discrepancy in the figures, in the drawings, or in the specifications, the matter shall be promptly submitted to the Contracting Officer, who shall promptly make a determination in writing. Any adjustment by the Contractor without such a determination shall be at its own risk and expense. The Contracting Officer shall furnish from time to time such detailed drawings and other information as considered necessary, unless otherwise provided.

(b) Wherever in the specifications or upon the drawings the words "directed", "required", "ordered", "designated", "prescribed", or words of like import are used, it shall be understood that the "direction", "requirement", "order", "designation", or "prescription", of the Contracting Officer is intended and similarly the words "approved", "acceptable", "satisfactory", or words of like import shall mean "approved by", or "acceptable to", or "satisfactory to" the Contracting Officer, unless otherwise expressly stated.

(c) Where "as shown," "as indicated", "as detailed", or words of similar import are used, it shall be understood that the reference is made to the drawings accompanying this contract unless stated otherwise. The word "provided" as used herein shall be understood to mean "provide complete in place," that is "furnished and installed".

(d) Shop drawings means drawings, submitted to the Government by the Contractor, subcontractor, or any lower tier subcontractor pursuant to a construction contract, showing in detail (1) the proposed fabrication and assembly of structural elements, and (2) the installation (i.e., fit, and attachment details) of materials or equipment. It includes drawings, diagrams, layouts, schematics, descriptive literature, illustrations, schedules, performance and test data, and similar materials furnished by the contractor to explain in detail specific portions of the work required by the contract. The Government may duplicate, use, and disclose in any manner and for any purpose shop drawings delivered under this contract.

(e) If this contract requires shop drawings, the Contractor shall coordinate all such drawings, and review them for accuracy, completeness, and compliance with contract requirements and shall indicate its approval thereon as evidence of such coordination and review. Shop drawings submitted to the Contracting Officer without evidence of the Contractor's approval may be returned for resubmission. The Contracting Officer will indicate an approval or disapproval of the shop drawings and if not approved as submitted shall indicate the Government's reasons therefor. Any work done before such approval shall be at the Contractor's risk. Approval by the Contracting Officer shall not relieve the Contractor from responsibility for any errors or omissions in such drawings, nor from responsibility for complying with the requirements of this contract, except with respect to variations described and approved in accordance with (f) below.

(f) If shop drawings show variations from the contract requirements, the Contractor shall describe such variations in writing, separate from the drawings, at the time of submission. If the Contracting Officer approves any such variation, the Contracting Officer shall issue an appropriate contract modification, except that, if the variation is minor or does not involve a change in price or in time of performance, a modification need not be issued.

(g) The Contractor shall submit to the Contracting Officer for approval four copies (unless otherwise indicated) of all shop drawings as called for

under the various headings of these specifications. Three sets (unless otherwise indicated) of all shop drawings, will be retained by the Contracting Officer and one set will be returned to the Contractor.

(End of clause)

84 52.236-26 PRECONSTRUCTION CONFERENCE (FEB 1995)

If the Contracting Officer decides to conduct a preconstruction conference, the successful offeror will be notified and will be required to attend. The Contracting Officer's notification will include specific details regarding the date, time, and location of the conference, any need for attendance by subcontractors, and information regarding the items to be discussed.

(End of clause)

85 52.236-7000 MODIFICATION PROPOSALS--PRICE BREAKDOWN (DEC 1991)

(a) The Contractor shall furnish a price breakdown, itemized as required and within the time specified by the Contracting Officer, with any proposal for a contract modification.

(b) The price breakdown--

(1) Must include sufficient detail to permit an analysis of profit, and of all costs for--

(i) Material;

(ii) Labor;

(iii) Equipment;

(iv) Subcontracts; and

(v) Overhead; and

(2) Must cover all work involved in the modification, whether the work was deleted, added, or changed.

(c) The Contractor shall provide similar price breakdowns to support any amounts claimed for subcontracts.

(d) The Contractor's proposal shall include a justification for any time extension proposed.

(End of clause)

86 52.242-13 BANKRUPTCY (JUL 1995)

In the event the Contractor enters into proceedings relating to bankruptcy, whether voluntary or involuntary, the Contractor agrees to furnish, by certified mail or electronic commerce method authorized by the contract, written notification of the bankruptcy to the Contracting Officer responsible for administering the contract. This notification shall be furnished within five days of the initiation of the proceedings relating to bankruptcy filing. This notification shall include the date on which the bankruptcy petition was filed, the identity of the court in which the bankruptcy petition was filed, and a listing of Government contract numbers and contracting offices for all Government contracts against which final payment has not been made. This obligation remains in effect until final payment under this contract.

(End of clause)

87 52.242-14 SUSPENSION OF WORK (APR 1984)

(a) The Contracting Officer may order the Contractor, in writing, to suspend, delay, or interrupt all or any part of the work of this contract for the period of time that the Contracting Officer determines appropriate for the convenience of the Government.

(b) If the performance of all or any part of the work is, for an unreasonable period of time, suspended, delayed, or interrupted (1) by an act of the Contracting Officer in the administration of this contract, or (2) by the Contracting Officer's failure to act within the time specified in this contract (or within a reasonable time if not specified), an adjustment shall be made for any increase in the cost of performance of this contract (excluding profit) necessarily caused by the unreasonable suspension, delay, or interruption, and the contract modified in writing accordingly. However, no adjustment shall be made under this clause for any suspension, delay, or interruption to the extent that performance would have been so suspended, delayed, or interrupted by any other cause, including the fault or negligence of the Contractor, or for which an equitable adjustment is provided for or excluded under any other term or condition of this contract.

(c) A claim under this clause shall not be allowed (1) for any costs incurred more than 20 days before the Contractor shall have notified the Contracting Officer in writing of the act or failure to act involved (but this requirement shall not apply as to a claim resulting from a suspension order), and (2) unless the claim, in an amount stated, is asserted in writing as soon as practicable after the termination of the suspension, delay, or interruption, but not later than the date of final payment under the contract.

(End of clause)

88 52.243-4 CHANGES (AUG 1987)

(a) The Contracting Officer may, at any time, without notice to the sureties, if any, by written order designated or indicated to be a change order, make changes in the work within the general scope of the contract, including changes--

(1) In the specifications (including drawings and designs);

(2) In the method or manner of performance of the work;

(3) In the Government-furnished facilities, equipment, materials, services, or site; or

(4) Directing acceleration in the performance of the work.

(b) Any other written or oral order (which, as used in this paragraph (b), includes direction, instruction, interpretation, or determination) from the Contracting Officer that causes a change shall be treated as a change order under this clause; provided, that the Contractor gives the Contracting Officer written notice stating (1) the date, circumstances, and source of the order and (2) that the Contractor regards the order as a change order.

(c) Except as provided in this clause, no order, statement, or conduct of the Contracting Officer shall be treated as a change under this clause or entitle the Contractor to an equitable adjustment.

(d) If any change under this clause causes an increase or decrease in the Contractor's cost of, or the time required for, the performance of any part of the work under this contract, whether or not changed by any such order, the Contracting Officer shall make an equitable adjustment and modify the contract in writing. However, except for an adjustment based on defective

specifications, no adjustment for any change under paragraph (b) of this clause shall be made for any costs incurred more than 20 days before the Contractor gives written notice as required. In the case of defective specifications for which the Government is responsible, the equitable adjustment shall include any increased cost reasonably incurred by the Contractor in attempting to comply with the defective specifications.

(e) The Contractor must assert its right to an adjustment under this clause within 30 days after (1) receipt of a written change order under paragraph (a) of this clause or (2) the furnishing of a written notice under paragraph (b) of this clause, by submitting to the Contracting Officer a written statement describing the general nature and amount of the proposal, unless this period is extended by the Government. The statement of proposal for adjustment may be included in the notice under paragraph (b) above.

(f) No proposal by the Contractor for an equitable adjustment shall be allowed if asserted after final payment under this contract.

(End of clause)

89 52.243-7001 PRICING OF CONTRACT MODIFICATIONS (DEC 1991)

When costs are a factor in any price adjustment under this contract, the contract cost principles and procedures in FAR Part 31 and DFARS Part 231, in effect on the date of this contract, apply.

(End of clause)

90 52.244-6 SUBCONTRACTS FOR COMMERCIAL ITEMS AND COMMERCIAL COMPONENTS (OCT 1998)

(a) Definition.

"Commercial item," as used in this clause, has the meaning contained in the clause at 52.202-1, Definitions.

"Subcontract," as used in this clause, includes a transfer of commercial items between divisions, subsidiaries, or affiliates of the Contractor or subcontractor at any tier.

(b) To the maximum extent practicable, the Contractor shall incorporate, and require its subcontractors at all tiers to incorporate, commercial items or nondevelopmental items as components of items to be supplied under this contract.

(c) Notwithstanding any other clause of this contract, the Contractor is not required to include any FAR provision or clause, other than those listed below to the extent they are applicable and as may be required to establish the reasonableness of prices under Part 15, in a subcontract at any tier for commercial items or commercial components:

(1) 52.222-26, Equal Opportunity (E.O. 11246);

(2) 52.222-35, Affirmative Action for Disabled Veterans and Veterans of the Vietnam Era (38 U.S.C. 4212(a));

(3) 52.222-36, Affirmative Action for Workers with Disabilities (29 U.S.C.793); and

(4) 52.247-64, Preference for Privately Owned U.S.-Flagged Commercial Vessels (46 U.S.C. 1241) (flow down not required for subcontracts awarded beginning May 1, 1996).

(d) The Contractor shall include the terms of this clause, including this paragraph (d), in subcontracts awarded under this contract.

(End of clause)

91 52.246-12 INSPECTION OF CONSTRUCTION (AUG 1996)

(a) Definition. "Work" includes, but is not limited to, materials, workmanship, and manufacture and fabrication of components.

(b) The Contractor shall maintain an adequate inspection system and perform such inspections as will ensure that the work performed under the contract conforms to contract requirements. The Contractor shall maintain complete inspection records and make them available to the Government. All work shall be conducted under the general direction of the Contracting Officer and is subject to Government inspection and test at all places and at all reasonable times before acceptance to ensure strict compliance with the terms of the contract.

(c) Government inspections and tests are for the sole benefit of the Government and do not--

(1) Relieve the Contractor of responsibility for providing adequate quality control measures;

(2) Relieve the Contractor of responsibility for damage to or loss of the material before acceptance;

(3) Constitute or imply acceptance; or

(4) Affect the continuing rights of the Government after acceptance of the completed work under paragraph (i) below.

(d) The presence or absence of a Government inspector does not relieve the Contractor from any contract requirement, nor is the inspector authorized to change any term or condition of the specification without the Contracting Officer's written authorization.

(e) The Contractor shall promptly furnish, at no increase in contract price, all facilities, labor, and material reasonably needed for performing such safe and convenient inspections and tests as may be required by the Contracting Officer. The Government may charge to the Contractor any additional cost of inspection or test when work is not ready at the time specified by the Contractor for inspection or test, or when prior rejection makes reinspection or retest necessary. The Government shall perform all inspections and tests in a manner that will not unnecessarily delay the work. Special, full size, and performance tests shall be performed as described in the contract.

(f) The Contractor shall, without charge, replace or correct work found by the Government not to conform to contract requirements, unless in the public interest the Government consents to accept the work with an appropriate adjustment in contract price. The Contractor shall promptly segregate and remove rejected material from the premises.

(g) If the Contractor does not promptly replace or correct rejected work, the Government may (1) by contract or otherwise, replace or correct the work and charge the cost to the Contractor or (2) terminate for default the Contractor's right to proceed.

(h) If, before acceptance of the entire work, the Government decides to examine already completed work by removing it or tearing it out, the Contractor, on request, shall promptly furnish all necessary facilities, labor, and material. If the work is found to be defective or nonconforming in any material respect due to the fault of the Contractor or its subcontractors, the Contractor shall defray the expenses of the examination and of satisfactory reconstruction. However, if the work is found to meet contract requirements, the Contracting Officer shall make an equitable adjustment for the additional services involved in the examination and reconstruction, including, if completion of the work was thereby delayed, an extension of time.

(i) Unless otherwise specified in the contract, the Government shall

accept, as promptly as practicable after completion and inspection, all work required by the contract or that portion of the work the Contracting Officer determines can be accepted separately. Acceptance shall be final and conclusive except for latent defects, fraud, gross mistakes amounting to fraud, or the Government's rights under any warranty or guarantee.

(End of clause)

92 52.248-3 VALUE ENGINEERING--CONSTRUCTION (MAR 1989)

(a) General. The Contractor is encouraged to develop, prepare, and submit value engineering change proposals (VECP's) voluntarily. The Contractor shall share in any instant contract savings realized from accepted VECP's, in accordance with paragraph (f) below.

(b) Definitions. "Collateral costs," as used in this clause, means agency costs of operation, maintenance, logistic support, or Government-furnished property.

"Collateral savings," as used in this clause, means those measurable net reductions resulting from a VECP in the agency's overall projected collateral costs, exclusive of acquisition savings, whether or not the acquisition cost changes.

"Contractor's development and implementation costs," as used in this clause, means those costs the Contractor incurs on a VECP specifically in developing, testing, preparing, and submitting the VECP, as well as those costs the Contractor incurs to make the contractual changes required by Government acceptance of a VECP.

"Government costs," as used in this clause, means those agency costs that result directly from developing and implementing the VECP, such as any net increases in the cost of testing, operations, maintenance, and logistic support. The term does not include the normal administrative costs of processing the VECP.

"Instant contract savings," as used in this clause, means the estimated reduction in Contractor cost of performance resulting from acceptance of the VECP, minus allowable Contractor's development and implementation costs, including subcontractors' development and implementation costs (see paragraph (h) below).

"Value engineering change proposal (VECP)" means a proposal that--

(1) Requires a change to this, the instant contract, to implement; and

(2) Results in reducing the contract price or estimated cost without impairing essential functions or characteristics; provided, that it does not involve a change--

(i) In deliverable end item quantities only; or

(ii) To the contract type only.

(c) VECP preparation. As a minimum, the Contractor shall include in each VECP the information described in subparagraphs (1) through (7) below. If the proposed change is affected by contractually required configuration management or similar procedures, the instructions in those procedures relating to format, identification, and priority assignment shall govern VECP preparation. The VECP shall include the following:

(1) A description of the difference between the existing contract requirement and that proposed, the comparative advantages and disadvantages of each, a justification when an item's function or characteristics are being altered, and the effect of the change on the end item's performance.

(2) A list and analysis of the contract requirements that must be changed if the VECP is accepted, including any suggested specification revisions.

(3) A separate, detailed cost estimate for (i) the affected portions of the existing contract requirement and (ii) the VECP. The cost reduction associated with the VECP shall take into account the Contractor's allowable development and implementation costs, including any amount attributable to subcontracts under paragraph (h) below.

(4) A description and estimate of costs the Government may incur in implementing the VECP, such as test and evaluation and operating and support costs.

(5) A prediction of any effects the proposed change would have on collateral costs to the agency.

(6) A statement of the time by which a contract modification accepting the VECP must be issued in order to achieve the maximum cost reduction, noting any effect on the contract completion time or delivery schedule.

(7) Identification of any previous submissions of the VECP, including the dates submitted, the agencies and contract numbers involved, and previous Government actions, if known.

(d) Submission. The Contractor shall submit VECP's to the Resident Engineer at the worksite, with a copy to the Contracting Officer.

(e) Government action. (1) The Contracting Officer shall notify the Contractor of the status of the VECP within 45 calendar days after the contracting office receives it. If additional time is required, the Contracting Officer shall notify the Contractor within the 45-day period and provide the reason for the delay and the expected date of the decision. The Government will process VECP's expeditiously; however, it shall not be liable for any delay in acting upon a VECP.

(2) If the VECP is not accepted, the Contracting Officer shall notify the Contractor in writing, explaining the reasons for rejection. The Contractor may withdraw any VECP, in whole or in part, at any time before it is accepted by the Government. The Contracting Officer may require that the Contractor provide written notification before undertaking significant expenditures for VECP effort.

(3) Any VECP may be accepted, in whole or in part, by the Contracting Officer's award of a modification to this contract citing this clause. The Contracting Officer may accept the VECP, even though an agreement on price reduction has not been reached, by issuing the Contractor a notice to proceed with the change. Until a notice to proceed is issued or a contract modification applies a VECP to this contract, the Contractor shall perform in accordance with the existing contract. The Contracting Officer's decision to accept or reject all or part of any VECP shall be final and not subject to the Disputes clause or otherwise subject to litigation under the Contract Disputes Act of 1978 (41 U.S.C. 601-613).

(f) Sharing. (1) Rates. The Government's share of savings is determined by subtracting Government costs from instant contract savings and multiplying the result by (i) 45 percent for fixed-price contracts or (ii) 75 percent for cost-reimbursement contracts.

(2) Payment. Payment of any share due the Contractor for use of a VECP on this contract shall be authorized by a modification to this contract to--

(i) Accept the VECP;

(ii) Reduce the contract price or estimated cost by the amount of instant contract savings; and

(iii) Provide the Contractor's share of savings by adding the amount calculated to the contract price or fee.

(g) Collateral savings. If a VECP is accepted, the instant contract amount shall be increased by 20 percent of any projected collateral savings determined to be realized in a typical year of use after subtracting any Government costs not previously offset. However, the

Contractor's share of collateral savings shall not exceed (1) the contract's firm-fixed-price or estimated cost, at the time the VECP is accepted, or (2) $100,000, whichever is greater. The Contracting Officer shall be the sole determiner of the amount of collateral savings, and that amount shall not be subject to the Disputes clause or otherwise subject to litigation under 41 U.S.C. 601-613.

(h) Subcontracts. The Contractor shall include an appropriate value engineering clause in any subcontract of $50,000 or more and may include one in subcontracts of lesser value. In computing any adjustment in this contract's price under paragraph (f) above, the Contractor's allowable development and implementation costs shall include any subcontractor's allowable development and implementation costs clearly resulting from a VECP accepted by the Government under this contract, but shall exclude any value engineering incentive payments to a subcontractor. The Contractor may choose any arrangement for subcontractor value engineering incentive payments; provided, that these payments shall not reduce the Government's share of the savings resulting from the VECP.

(i) Data. The Contractor may restrict the Government's right to use any part of a VECP or the supporting data by marking the following legend on the affected parts:

"These data, furnished under the Value Engineering--Construction clause of contract _____, shall not be disclosed outside the Government or duplicated, used, or disclosed, in whole or in part, for any purpose other than to evaluate a value engineering change proposal submitted under the clause. This restriction does not limit the Government's right to use information contained in these data if it has been obtained or is otherwise available from the Contractor or from another source without limitations."

If a VECP is accepted, the Contractor hereby grants the Government unlimited rights in the VECP and supporting data, except that, with respect to data qualifying and submitted as limited rights technical data, the Government shall have the rights specified in the contract modification implementing the VECP and shall appropriately mark the data. (The terms "unlimited rights" and "limited rights" are defined in Part 27 of the Federal Acquisition Regulation.)

(End of clause)

93 52.248-7000 PREPARATION OF VALUE ENGINEERING CHANGE PROPOSALS (MAY 1994)

Prepare value engineering change proposals, for submission pursuant to the value engineering clause of this contract, in the format prescribed by the version of MIL-STD-973 in effect on the date of contract award.

(End of clause)

94 52.249-2 I TERMINATION FOR CONVENIENCE OF THE GOVERNMENT (FIXED-PRICE) (SEP 1996)-ALTERNATE I (SEP 1996)

(a) The Government may terminate performance of work under this contract in whole or, from time to time, in part if the Contracting Officer determines that a termination is in the Government's interest. The Contracting Officer shall terminate by delivering to the Contractor a Notice of Termination specifying the extent of termination and the effective date.

(b) After receipt of a Notice of Termination, and except as directed by the Contracting Officer, the Contractor shall immediately proceed with the

following obligations, regardless of any delay in determining or adjusting any amounts due under this clause:

(1) Stop work as specified in the notice.

(2) Place no further subcontracts or orders (referred to as subcontracts in this clause) for materials, services, or facilities, except as necessary to complete the continued portion of the contract.

(3) Terminate all subcontracts to the extent they relate to the work terminated.

(4) Assign to the Government, as directed by the Contracting Officer, all right, title, and interest of the Contractor under the subcontracts terminated, in which case the Government shall have the right to settle or to pay any termination settlement proposal arising out of those terminations.

(5) With approval or ratification to the extent required by the Contracting Officer, settle all outstanding liabilities and termination settlement proposals arising from the termination of subcontracts; the approval or ratification will be final for purposes of this clause.

(6) As directed by the Contracting Officer, transfer title and deliver to the Government (i) the fabricated or unfabricated parts, work in process, completed work, supplies, and other material produced or acquired for the work terminated, and (ii) the completed or partially completed plans, drawings, information, and other property that, if the contract had been completed, would be required to be furnished to the Government.

(7) Complete performance of the work not terminated.

(8) Take any action that may be necessary, or that the Contracting Officer may direct, for the protection and preservation of the property related to this contract that is in the possession of the Contractor and in which the Government has or may acquire an interest.

(9) Use its best efforts to sell, as directed or authorized by the Contracting Officer, any property of the types referred to in subparagraph (b)(6) of this clause; provided, however, that the Contractor (i) is not required to extend credit to any purchaser and (ii) may acquire the property under the conditions prescribed by, and at prices approved by, the Contracting Officer. The proceeds of any transfer or disposition will be applied to reduce any payments to be made by the Government under this contract, credited to the price or cost of the work, or paid in any other manner directed by the Contracting Officer.

(c) The Contractor shall submit complete termination inventory schedules no later than 120 days from the effective date of termination, unless extended in writing by the Contracting Officer upon written request of the Contractor within this 120-day period.

(d) After expiration of the plant clearance period as defined in Subpart 45.6 of the Federal Acquisition Regulation, the Contractor may submit to the Contracting Officer a list, certified as to quantity and quality, of termination inventory not previously disposed of, excluding items authorized for disposition by the Contracting Officer. The Contractor may request the Government to remove those items or enter into an agreement for their storage. Within 15 days, the Government will accept title to those items and remove them or enter into a storage agreement. The Contracting Officer may verify the list upon removal of the items, or if stored, within 45 days from submission of the list, and shall correct the list, as necessary, before final settlement.

(e) After termination, the Contractor shall submit a final termination settlement proposal to the Contracting Officer in the form and with the certification prescribed by the Contracting Officer. The Contractor shall

submit the proposal promptly, but no later than 1 year from the effective date of termination, unless extended in writing by the Contracting Officer upon written request of the Contractor within this 1 year period. However, if the Contracting Officer determines that the facts justify it, a termination settlement proposal may be received and acted on after 1 year or any extension. If the Contractor fails to submit the proposal within the time allowed, the Contracting Officer may determine, on the basis of information available, the amount, if any, due the Contractor because of the termination and shall pay the amount determined.

(f) Subject to paragraph (e) of this clause, the Contractor and the Contracting Officer may agree upon the whole or any part of the amount to be paid or remaining to be paid because of the termination. The amount may include a reasonable allowance for profit on work done. However, the agreed amount, whether under this paragraph (f) or paragraph (g) of this clause, exclusive of costs shown in subparagraph (g)(3) of this clause, may not exceed the total contract price as reduced by (1) the amount of payments previously made and (2) the contract price of work not terminated. The contract shall be modified, and the Contractor paid the agreed amount. Paragraph (g) of this clause shall not limit, restrict, or affect the amount that may be agreed upon to be paid under this paragraph.

(g) If the Contractor and Contracting Officer fail to agree on the whole amount to be paid the Contractor because of the termination of work, the Contracting Officer shall pay the Contractor the amounts determined as follows, but without duplication of any amounts agreed upon under paragraph (f) of this clause:

(1) For contract work performed before the effective date of termination, the total (without duplication of any items) of--

(i) The cost of this work;

(ii) The cost of settling and paying termination settlement proposals under terminated subcontracts that are properly chargeable to the terminated portion of the contract if not included in subdivision (g)(1)(i) of this clause; and

(iii) A sum, as profit on subdivision (g)(1)(i) of this clause, determined by the Contracting Officer under 49.202 of the Federal Acquisition Regulation, in effect on the date of this contract, to be fair and reasonable; however, if it appears that the Contractor would have sustained a loss on the entire contract had it been completed, the Contracting Officer shall allow no profit under this subdivision (iii) and shall reduce the settlement to reflect the indicated rate of loss.

(2) The reasonable costs of settlement of the work terminated, including--

(i) Accounting, legal, clerical, and other expenses reasonably necessary for the preparation of termination settlement proposals and supporting data;

(ii) The termination and settlement of subcontracts (excluding the amounts of such settlements); and

(iii) Storage, transportation, and other costs incurred, reasonably necessary for the preservation, protection, or disposition of the termination inventory.

(h) Except for normal spoilage, and except to the extent that the Government expressly assumed the risk of loss, the Contracting Officer shall exclude from the amounts payable to the Contractor under paragraph (g) of this clause, the fair value, as determined by the Contracting Officer, of property that is destroyed, lost, stolen, or damaged so as to become undeliverable to the Government or to a buyer.

(i) The cost principles and procedures of Part 31 of the Federal Acquisition Regulation, in effect on the date of this contract, shall

govern all costs claimed, agreed to, or determined under this clause.

(j) The Contractor shall have the right of appeal, under the Disputes clause, from any determination made by the Contracting Officer under paragraph (e), (g), or (l) of this clause, except that if the Contractor failed to submit the termination settlement proposal or request for equitable adjustment within the time provided in paragraph (e) or (l), respectively, and failed to request a time extension, there is no right of appeal.

(k) In arriving at the amount due the Contractor under this clause, there shall be deducted--

(1) All unliquidated advance or other payments to the Contractor under the terminated portion of this contract;

(2) Any claim which the Government has against the Contractor under this contract; and

(3) The agreed price for, or the proceeds of sale of, materials, supplies, or other things acquired by the Contractor or sold under the provisions of this clause and not recovered by or credited to the Government.

(l) If the termination is partial, the Contractor may file a proposal with the Contracting Officer for an equitable adjustment of the price(s) of the continued portion of the contract. The Contracting Officer shall make any equitable adjustment agreed upon. Any proposal by the Contractor for an equitable adjustment under this clause shall be requested within 90 days from the effective date of termination unless extended in writing by the Contracting Officer.

(m)(1) The Government may, under the terms and conditions it prescribes, make partial payments and payments against costs incurred by the Contractor for the terminated portion of the contract, if the Contracting Officer believes the total of these payments will not exceed the amount to which the Contractor will be entitled.

(2) If the total payments exceed the amount finally determined to be due, the Contractor shall repay the excess to the Government upon demand, together with interest computed at the rate established by the Secretary of the Treasury under 50 U.S.C. App. 1215(b)(2). Interest shall be computed for the period from the date the excess payment is received by the Contractor to the date the excess is repaid. Interest shall not be charged on any excess payment due to a reduction in the Contractor's termination settlement proposal because of retention or other disposition of termination inventory until 10 days after the date of the retention or disposition, or a later date determined by the Contracting Officer because of the circumstances.

(n) Unless otherwise provided in this contract or by statute, the Contractor shall maintain all records and documents relating to the terminated portion of this contract for 3 years after final settlement. This includes all books and other evidence bearing on the Contractor's costs and expenses under this contract. The Contractor shall make these records and documents available to the Government, at the Contractor's office, at all reasonable times, without any direct charge. If approved by the Contracting Officer, photographs, microphotographs, or other authentic reproductions may be maintained instead of original records and documents.

(End of clause)

95 52.249-10 DEFAULT (FIXED-PRICE CONSTRUCTION) (APR 1984)

(a) If the Contractor refuses or fails to prosecute the work or any separable part, with the diligence that will insure its completion within the time specified in this contract including any extension, or fails to complete the work within this time, the Government may, by written notice to the Contractor, terminate the right to proceed with the work (or the separable part of the work) that has been delayed. In this event, the Government may take over the work and complete it by contract or otherwise, and may take possession of and use any materials, appliances, and plant on the work site necessary for completing the work. The Contractor and its sureties shall be liable for any damage to the Government resulting from the Contractor's refusal or failure to complete the work within the specified time, whether or not the Contractor's right to proceed with the work is terminated. This liability includes any increased costs incurred by the Government in completing the work.

(b) The Contractor's right to proceed shall not be terminated nor the Contractor charged with damages under this clause, if-

(1) The delay in completing the work arises from unforeseeable causes beyond the control and without the fault or negligence of the Contractor. Examples of such causes include (i) acts of God or of the public enemy, (ii) acts of the Government in either its sovereign or contractual capacity, (iii) acts of another Contractor in the performance of a contract with the Government, (iv) fires, (v) floods, (vi) epidemics, (vii) quarantine restrictions, (viii) strikes, (ix) freight embargoes, (x) unusually severe weather, or (xi) delays of subcontractors or suppliers at any tier arising from unforeseeable causes beyond the control and without the fault or negligence of both the Contractor and the subcontractors or suppliers; and

(2) The Contractor, within 10 days from the beginning of any delay (unless extended by the Contracting Officer), notifies the Contracting Officer in writing of the causes of delay. The Contracting Officer shall ascertain the facts and the extent of delay. If, in the judgment of the Contracting Officer, the findings of fact warrant such action, the time for completing the work shall be extended. The findings of the Contracting Officer shall be final and conclusive on the parties, but subject to appeal under the Disputes clause.

(c) If, after termination of the Contractor's right to proceed, it is determined that the Contractor was not in default, or that the delay was excusable, the rights and obligations of the parties will be the same as if the termination had been issued for the convenience of the Government.

(d) The rights and remedies of the Government in this clause are in addition to any other rights and remedies provided by law or under this contract.

(End of clause)

96 52.249-5000 BASIS FOR SETTLEMENT OF PROPOSALS

Actual costs will be used to determine equipment costs for a settlement proposal submitted on the total cost basis under FAR 49.206-2(b). In evaluating a terminations settlement proposal using the total cost basis, the following principiles will be applied to determine allowable equipment costs:

(1) Actual costs for each piece of equipment, or groups of similar serial or series equipment, need not be available in the contractor's accounting records to determine total actual equipment costs.

(2) If equipment costs have been allocated to a contract using predetermined rates , those charges will be adjusted to actual costs.
(3) Recorded job costs adjusted for unallowable expenses will be used to determine equipment operating expenses.
(4) Ownership costs (depreciation) will be determined using the contractor's depreciation schedule (subject to the provisions of FAR 31.205-11).
(5) License, taxes, storage and insurance costs are normally recovered as an indirect expense and unless the contractor charges these costs directly to contracts, they will be recovered through the indirect expense rate.

(End of Statement)

97 52.252-4 ALTERATIONS IN CONTRACT (APR 1984)

Portions of this contract are altered as follows:
_____

(End of clause)
(R 7-105.1(a) 1949 JUL)

98 52.253-1 COMPUTER GENERATED FORMS (JAN 1991)

(a) Any data required to be submitted on a Standard or Optional Form prescribed by the Federal Acquisition Regulation (FAR) may be submitted on a computer generated version of the form, provided there is no change to the name, content, or sequence of the data elements on the form, and provided the form carries the Standard or Optional Form number and edition date.
(b) Unless prohibited by agency regulations, any data required to be submitted on an agency unique form prescribed by an agency supplement to the FAR may be submitted on a computer generated version of the form provided there is no change to the name, content, or sequence of the data elements on the form and provided the form carries the agency form number and edition date.
(c) If the Contractor submits a computer generated version of a form that is different than the required form, then the rights and obligations of the parties will be determined based on the content of the required form.

(End of clause)

END OF SECTION 00700

TABLE OF CONTENTS

SPECIAL CLAUSES

PARAGRAPH NO.	PARAGRAPH TITLE
SC-1	COMMENCEMENT, PROSECUTION, AND COMPLETION OF WORK
SC-1.1	OPTION FOR INCREASED QUANTITY
SC-1.2	EXCEPTION TO COMPLETION PERIODS
SC-2	LIQUIDATED DAMAGES - CONSTRUCTION
SC-3	DELETED - TIME EXTENSIONS
SC-4	DELETED – VARIATIONS IN ESTIMATED QUANTITIES - SUBDIVIDED ITEMS
SC-5	INSURANCE - WORK ON A GOVERNMENT INSTALLATION
SC-6	DELETED – CONTINUING CONTRACTS
SC-7	PERFORMANCE OF WORK BY THE CONTRACTOR
SC-8	PHYSICAL DATA
SC-9	DELETED - QUANTITY SURVEYS
SC-10	LAYOUT OF WORK
SC-11	DELETED – PAYMENT FOR MOBILIZATION AND DEMOBILIZATION
SC-12	DELETED – AIRFIELD SAFETY PRECAUTIONS
SC-13	DELETED – IDENTIFICATION OF GOVERNMENT-FURNISHED PROPERTY
SC-14	EQUIPMENT OWNERSHIP AND OPERATING EXPENSE SCHEDULE
SC-15	PAYMENT FOR MATERIALS DELIVERED OFF-SITE
SC-16	DELETED – ORDER OF PRECEDENCE
SC-17	DELETED – LIMITATION OF PAYMENT FOR DESIGN
SC-18	CONTRACT DRAWINGS, MAPS AND SPECIFICATIONS

SC-19 DELETED – TECHNICAL PROPOSAL - COPIES TO BE FURNISHED UPON AWARD

SC-20. DELETED – COMPLIANCE CERTIFICATION

SC-21. DELETED – VALUE ENGINEERING

SC-22. EPA ENERGY STAR

SC-23 YEAR 2000 COMPLIANCE

SC-24 RECOVERED MATERIALS

SPECIAL CLAUSES

SC-1. COMMENCEMENT, PROSECUTION, AND COMPLETION OF WORK (APR 1984) (FAR 52.211-10).

The Contractor shall be required to (a) commence work under this Contract within 10 calendar days after the date the Contractor receives the notice to proceed, (b) prosecute the work diligently, and (c) complete the entire work ready for use not later than 450 calendar days after date of receipt by Contractor of notice to proceed. The time stated for completion shall include final cleanup of the premises.

SC-1.1 OPTION FOR INCREASED QUANTITY

a. The Government may increase the quantity of work awarded by exercising one or more of the Optional Bid Items 0003 and 0004 at any time, or not at all, but no later than 60 calendar days after receipt by Contractor of notice to proceed. Notice to proceed on work Item(s) added by exercise of the option(s) will be given upon execution of consent of surety.

b. The parties hereto further agree that any option herein shall be considered to have been exercised at the time the Government deposits written notification to the Contractor in the mails.

SC-1.2 Exception to Completion Period(s): In case the Contracting Officer determines that completion of seeding, sodding, and planting, and establishment of same is not feasible within the completion period(s) stated above, the Contractor shall accomplish such work in the first planting period following the contract completion period and shall complete such work as specified, unless other planting periods are directed or approved by the Contracting Officer.

SC-2. LIQUIDATED DAMAGES - CONSTRUCTION (APR 1984) (FAR 52.211-12)

(a) If the Contractor fails to complete the work within the time specified in the Contract, or any extension, the Contractor shall pay to the Government as liquidated damages, the sum of $891 for each day of delay.

(b) If the Government terminates the Contractor's right to proceed, the resulting damage will consist of liquidated damages until such reasonable time as may be required for final completion of the work together with any increased costs occasioned the Government in completing the work.

(c) If the Government does not terminate the Contractor's right to proceed, the resulting damage will consist of liquidated damages until the work is completed or accepted.

(d) Exception to Liquidated Damage: In case the Contracting Officer determines that completion of work stated above in paragraph Exception to Completion Period(s) is not feasible during the completion period(s) stated in SC-1, such work will be exempted from liquidated damages.

SC-3. DELETED. TIME EXTENSIONS (APR 1984) (FAR 52.211-13)

SC-4. DELETED – VARIATIONS IN ESTIMATED QUANTITIES - SUBDIVIDED ITEMS (MAR 1995) (EFARS 52.212-5001)

SC-5. INSURANCE - WORK ON A GOVERNMENT INSTALLATION (SEP 1989) (FAR 52.228-5)

(a) The Contractor shall, at its own expense, provide and maintain during the entire performance period of this Contract at least the kinds and minimum amounts of insurance required in the Insurance Liability Schedule or elsewhere in the Contract.

(b) Before commencing work under this Contract, the Contractor shall certify to the Contracting Officer in writing that the required insurance has been obtained. The policies evidencing required insurance shall contain an endorsement to the effect that any cancellation or any material change adversely affecting the Government's interest shall not be effective:

(1) for such period as the laws of the State in which this Contract is to be performed prescribe; or

(2) until 30 days after the insurer or the Contractor gives written notice to the Contracting Officer, whichever period is longer.

(c) The Contractor shall insert the substance of this clause, including this paragraph (c), in subcontracts under this Contract that require work on a Government installation and shall require subcontractors to provide and maintain the insurance required in the Schedule or elsewhere in the Contract. The Contractor shall maintain a copy of all subcontractors' proofs of required insurance, and shall make copies available to the Contracting Officer upon request.

(d) Insurance Liability Schedule (FAR 28.307-2)

(1) Workers' compensation and employer's liability. Contractors are required to comply with applicable Federal and State workers' compensation and occupational disease statutes. If occupational diseases are not compensable under those statutes, they shall be covered under the employer's liability section of the insurance policy, except when Contract operations are so commingled with a Contractor's commercial operation that it would not be practical to require this coverage. Employer's liability coverage of at least $100,000 shall be required, except in states with exclusive or monopolistic funds that do not permit workers' compensation to be written by private carriers.

(2) General Liability.

(a) The Contracting Officer shall require bodily injury liability insurance coverage written on the comprehensive form of policy of at least $500,000 per occurrence.

(b) Property damage liability insurance shall be required only in special circumstances as determined by the agency.

(3) Automobile liability. The Contracting Officer shall require automobile liability insurance written on the comprehensive form of policy. The policy shall provide for bodily injury and property damage liability covering the operation of all automobiles used in connection with performing the Contract. Policies covering automobiles operated in the United States shall provide coverage of at least $200,000 per person and $500,000 per occurrence for bodily injury and $20,000 per occurrence for property damage. The amount of liability coverage on other policies shall be commensurate with any legal requirements of the locality and sufficient to meet normal and customary claims.

(4) Aircraft public and passenger liability. When aircraft are used in connection with performing the Contract, the Contracting Officer shall require aircraft public and passenger liability insurance. Coverage shall be at least $200,000 per person and $500,000 per occurrence for bodily injury, other than passenger liability, and $200,000 per occurrence for property damage. Coverage for passenger liability bodily injury shall be at least $200,000 multiplied by the number of seats or passengers, whichever is greater.

(5) Vessel liability. When Contract performance involves use of vessels, the Contracting Officer shall require, as determined by the agency, vessel collision liability and protection and indemnity liability insurance.

(6) Environmental Liability If this contract includes the transport, treatment, storage, or disposal of hazardous material waste the following coverage is required.

The Contractor shall ensure the transporter and disposal facility have liability insurance iN effect for claims arising out of the death or bodily injury and property damage from hazardous material/waste transport, treatment, storage and disposal, including vehicle liability and legal defense costs in the amount of $1,000,000.00 as evidenced by a certificate of insurance for General, Automobile, and Environmental Liability Coverage. Proof of this insurance shall be provided to the Contracting Officer.

SC-6. DELETED – CONTINUING CONTRACTS (EFARS 52.232-5001) (MAR 1995):

SC-7. PERFORMANCE OF WORK BY THE CONTRACTOR (APR 1984) (FAR 52.236-1): The Contractor shall perform on the site, and with its own organization, work equivalent to at least 15 percent of the total amount of work to be performed under the Contract. The percentage may be reduced by a supplemental agreement to this Contract if, during performing the work, the Contractor requests a reduction and the Contracting Officer determines that the reduction would be to the advantage of the Government.

SC-8. PHYSICAL DATA (APR 1984) (FAR 52.236-4): Data and information furnished or referred to below is for the Contractor's information. The Government will not be responsible for any interpretation of or conclusion drawn from the data or information by the Contractor.

(a) Physical Conditions: The indications of physical conditions on the drawings and in the specifications are the result of site investigations by test holes shown on the drawings.

(b) Weather Conditions: Each bidder shall be satisfied before submitting his bid as to the hazards likely to arise from weather conditions. Complete weather records and reports may be obtained from any National Weather Service Office.

(c) Transportation Facilities: Each bidder, before submitting his bid, shall make an investigation of the conditions of existing public and private roads and of clearances, restrictions, bridge load limits, and other limitations affecting transportation and ingress and egress at the jobsite. The unavailability of transportation facilities or limitations thereon shall not become a basis for claims for damages or extension of time for completion of the work.

SC-9. DELETED. QUANTITY SURVEYS (APR 1984) (FAR 52.236-16)

SC-10. LAYOUT OF WORK (APR 1984) (FAR 52.236-17): The Contractor shall lay out its work from Government-established base lines and bench marks indicated on the drawings, and shall be responsible for all measurements in connection with the layout. The Contractor shall furnish, at its own expense, all stakes, templates, platforms, equipment, tools, materials, and labor required to lay out any part of the work. The Contractor shall be responsible for executing the work to the lines and grades that may be established or indicated by the Contracting Officer. The Contractor shall also be responsible for maintaining and preserving all stakes and other marks established by the Contracting Officer until authorized to remove them. If such marks are destroyed by the Contractor or through its negligence before their removal is authorized, the Contracting Officer may replace them and deduct the expense of the replacement from any amounts due, or to become due, to the Contractor.

SC-11. DELETED – PAYMENT FOR MOBILIZATION AND DEMOBILIZATION (DEC 1991) (FAR 52.236-7004).

SC-12. DELETED – AIRFIELD SAFETY PRECAUTIONS (DEC 1991) (DOD FAR SUPP 252.236-7005)

SC-13. DELETED – IDENTIFICATION OF GOVERNMENT-FURNISHED PROPERTY (APR 1984) (FAR 52.245-3)

SC-14. EQUIPMENT OWNERSHIP AND OPERATING EXPENSE SCHEDULE (MAR 1995)-(EFARS 52.231-5000)

(a) This clause does not apply to terminations. See 52.249-5000, Basis for Settlement of Proposals and FAR Part 49.

(b) Allowable cost for construction and marine plant and equipment in sound workable condition owned or controlled and furnished by a contractor or subcontractor at any tier shall be based on actual cost data for each piece of equipment or groups of similar serial and series for which the Government can determine both ownership and operating costs from the contractor's accounting records. When both ownership and operating costs cannot be determined for any piece of equipment or groups of similar serial or series equipment from the contractor's accounting records, costs for that equipment shall be based upon the applicable provisions of EP 1110-1-8, Construction Equipment Ownership and Operating Expense Schedule, Region VIII. Working conditions shall be considered to be average for determining equipment rates using the schedule unless specified otherwise by the contracting officer. For equipment not included in the schedule, rates for comparable pieces of equipment may be used or a rate may be developed using the formula provided in the schedule. For forward pricing, the schedule in effect at the time of negotiations shall apply. For retroactive pricing, the schedule in effect at the time the work was performed shall apply.

(c) Equipment rental costs are allowable, subject to the provisions of FAR 31.105(d)(ii) and FAR 31.205-36. Rates for equipment rented from an organization under common control, lease-purchase arrangements, and sale-leaseback arrangements, will be determined using the schedule, except that actual rates will be used for equipment leased from an organization under common control that has an established practice of leasing the same or similar equipment to unaffiliated lessees.

(d) When actual equipment costs are proposed and the total amount of the pricing action exceeds the small purchase threshold, the contracting officer shall request the contractor to submit either certified cost or pricing data, or partial/limited data, as appropriate. The data shall be submitted on Standard Form 1411, Contract Pricing Proposal Cover Sheet.

SC-15. PAYMENT FOR MATERIALS DELIVERED OFF-SITE (MAR 1995)-(EFARS 52.232-5000)

(a) Pursuant to FAR clause 52.232-5, Payments Under Fixed Priced Construction Contracts, materials delivered to the contractor at locations other than the site of the work may be taken into consideration in making payments if included in payment estimates and if all the conditions of the General Provisions are fulfilled. Payment for items delivered to locations other than the work site will be limited to: (1) materials required by the technical provisions; or (3) materials that have been fabricated to the point where they are identifiable to an item of work required under this contract.

(b) Such payment will be made only after receipt of paid or receipted invoices or invoices with canceled check showing title to the items in the prime contractor and including the value of material and labor incorporated into the item. In addition to petroleum products, payment for materials delivered off-site is limited to the following items: Any other construction material stored offsite may be considered in determining the amount of a progress payment.

SC-16. DELETED – ORDER OF PRECEDENCE

SC-17. DELETED – LIMITATION OF PAYMENT FOR DESIGN

SC-18. CONTRACT DRAWINGS, MAPS, AND SPECIFICATIONS (OCT 1996) (52.0236-4001 EBS)

(a) The Government--

(1) Will provide the Contractor, without charge, one set of contract drawings and one set of specifications in electronic format on a compact disk. The Government will not give the Contractor any hard copy paper drawings or specifications for any contract resulting from this solicitation.

(b) The Contractor shall--

(1) check all drawings furnished immediately upon receipt;

(2) Compare all drawings and verify the figures before laying out the work;

(3) Promptly notify the Contracting Officer of any discrepancies; and

(4) Be responsible for any errors which might have been avoided by complying with this paragraph (b).

(c) Large scale drawings shall, in general, govern small scale drawings. Figures marked on drawings shall, in general, be followed in preference to scale measurements.

(d) Omissions from the drawings or specifications or the misdescription of details of work which are manifestly necessary to carry out the intent of the drawings and specifications, or which are customarily performed, shall not relieve the Contractor from performing such omitted or misdescribed details of the

work, but shall be performed as if fully and correctly set forth and described in the drawings and specifications.

(e) The work shall conform to the specifications and the contract drawings identified in the index of drawings attached at the end of the Special Clauses.

SC-19. DELETED – TECHNICAL PROPOSAL - COPIES TO BE FURNISHED UPON AWARD

SC-20. DELETED – COMPLIANCE CERTIFICATION

SC-21. DELETED – VALUE ENGINEERING

SC-22. EPA ENERGY STAR: The Government requires that certain equipment be Energy Star compliant. Initially, the sole Energy Star requirement shall be the self-certification by the bidder that the specified equipment is Energy Star compliant. Within 3 months of the availability of an EPA sanctioned test for Energy Star compliance, the Contractor shall submit all equipment upgrades and additions for testing and provide proof of compliance to the Government upon completion of testing. Testing shall be at the Contractor's expense.

SC-23. YEAR 2000 COMPLIANCE:

a. In accordance with FAR 39.106, the Contractor shall ensure that with respect to any design, construction, goods, or services under this contract as well as any subsequent task/delivery orders issued under this contract (if applicable), all information technology contained therein shall be Year 2000 compliant. Specifically:

b. The Contractor shall:

(1) Perform, maintain, and provide an inventory of all major components to include structures, equipment, items, parts, and furnishings under this contract and each task/delivery order which may be affected by the Year 2000 compliance requirement.

(2) Indicate whether each component is currently Year 2000 compliant or requires an upgrade for compliance prior to Government acceptance.

SC-24. RECOVERED MATERIALS: The Corps of Engineers encourages all bidders to utilize recovered materials to the maximum extent practicable. The attached APPENDIX R contains procurement guidelines for products containing recovered materials.

APPENDIX R

PART 247 - COMPREHENSIVE PROCUREMENT GUIDELINE FOR PRODUCTS CONTAINING RECOVERED MATERIALS

40 CFR Ch. 1 (7-7-96 Edition)

Subpart B-Item Designations

§ 247.10 Paper and paper products.

Paper and paper products, excluding building and construction paper grades.

§ 247.11 Vehicular products.

(a) Lubricating oils containing refined oil, including engine lubricating oils, hydraulic fluids, and gear oils, excluding marine and aviation oils.
(b) Tires. excluding airplane tire
(c) Reclaimed engine coolants, excluding coolants used in non-vehicular applications.

247.12 Construction products.

(a) Building insulation product including the following items:
(1) Loose-fill insulation, including but not limited to cellulose fiber, mineral fibers (fiberglass and rock vermiculite, and perlite;
(2) Blanket and batt insulation, including but not limited to mineral fibers (fiberglass and rock wool);
(3) Board (sheathing, roof decking wall panel) insulation, including but not limited to structural fiber and laminated paperboard products perlite composite board, polyurethane, polyisocyanurate, polystyrene, phenolics, and composites; and
(4) Spray-in-place insulation, including but not limited to foam-in polyurethane and polyisocyanurate and spray-on cellulose.
(b) Structural fiberboard and laminated paperboard products for applications other than building insulation, including building board, sheathing shingle backer, sound deadening roof insulating board, insulating board, acoustical and non-acoustical ceiling tile, acoustical and non-acoustical lay-in panels underlayments, and roof overlay (coverboard).
(c) Cement and concrete, including concrete products such as pipe block, containing coal fly as ground granulated blast furnace (GGBF) slag.
(d) Carpet made of polyester fiber use in low- and medium-wear applications.
(e) Floor tiles and patio block containing recovered rubber or plastic.

§247.13 Transportation products.

Traffic barricades and traffic used in controlling or restricting vehicular traffic.

§ 247.14 Park and recreation products

Playground surfaces and running tracks containing recovered rubber or plastic.

247.15 Landscaping products.

(a) Hydraulic mulch products containing recovered paper or recovered wood used for hydroseeding and over-spray for straw mulch in landscaping, erosion control, and soil reclamation.
(b) Compost made from yard trimmings, leaves, and/or grass clippings for use in landscaping, seeding of or other plants on roadsides and embankments, as a nutritious under trees and shrubs, and in erosion control and soil reclamation.

§ 247.16 Non-paper office product.

(a) Office recycling containers and office waste receptacles.
(b) Plastic desktop accessories.
(c) Toner cartridges.
(d) Binders.
(e) Plastic trash bags.

INDEX OF DRAWINGS

DRAWING NUMBER	SHEET NO.	PLATE NO.	TITLE	REV. NO.	DATE
			CLOSE COMBAT TACTICAL TRAINER (CCTT) FACILITY, FORT LEWIS, WA MCA PN 43855		
225/171-90-10	1	G001	Cover Sheet		18 DEC 98
225/171-90-10	2	G002	Index of Drawings		18 DEC 98
225/171-90-10	3	G003	Abbreviations/Symbols/Legends & Notes		18 DEC 98
225/171-90-10	4	GT1	Exploration Logs		18 DEC 98
225/171-90-10	5	GT2	Exploration Logs		18 DEC 98
225/171-90-10	6	GT3	Exploration Logs		18 DEC 98
225/171-90-10	7	GT4	Exploration Logs		18 DEC 98
225/171-90-10	8	GT5	Locations of Explorations		18 DEC 98
225/171-90-10	9	C0	Site Survey		18 DEC 98
225/171-90-10	10	C1	Horizontal Control & Paving Plan		18 DEC 98
225/171-90-10	11	C2	Grading and Drainage Plan		18 DEC 98
225/171-90-10	12	C3	Utility Plan		18 DEC 98
225/171-90-10	13	C4	Storm and Sanitary Sewer Profiles		18 DEC 98
225/171-90-10	14	C5	Sections		18 DEC 98
225/171-90-10	15	C6	Mobile Trailer Concrete Pad Joint Layout Plan		18 DEC 98
225/171-90-10	16	C7	Details		18 DEC 98
225/171-90-10	17	C8	Details		18 DEC 98
225/171-90-10	18	C9	Details		18 DEC 98

DRAWING NUMBER	SHEET NO.	PLATE NO.	TITLE	REV. NO.	DATE
225/171-90-10	19	C10	Details		18 DEC 98
225/171-90-10	20	L001	Landscape Plan		18 DEC 98
225/171-90-10	21	L002	Irrigation Plan		18 DEC 98
225/171-90-10	22	A001	Composite View Plan		18 DEC 98
225/171-90-10	23	A201	Floor Plan - Area A		18 DEC 98
225/171-90-10	24	A202	Floor Plan - Area B		18 DEC 98
225/171-90-10	25	A203	Reflected Ceiling Plan - Area A		18 DEC 98
225/171-90-10	26	A204	Reflected Ceiling Plan - Area B		18 DEC 98
225/171-90-10	27	A205	Roof Plan		18 DEC 98
225/171-90-10	28	A301	Elevations		18 DEC 98
225/171-90-10	29	A302	Elevations		18 DEC 98
225/171-90-10	30	A303	Elevations		18 DEC 98
225/171-90-10	31	A304	Building Sections		18 DEC 98
225/171-90-10	32	A401	Room Finish Schedule/Color Schedule		18 DEC 98
225/171-90-10	33	A402	Exterior Finish Schedule/Floor Tile Patterns		18 DEC 98
225/171-90-10	34	A403	Door Schedule, Door & Window Elevations		18 DEC 98
225/171-90-10	35	A404	Door Details		18 DEC 98
225/171-90-10	36	A405	Door Details		18 DEC 98
225/171-90-10	37	A406	Window Details		18 DEC 98
225/171-90-10	38	A501	Enlarged Toilet Plan/Interior Wall Elevations		18 DEC 98
225/171-90-10	39	A601	Wall Sections		18 DEC 98
225/171-90-10	40	A602	Wall Sections		18 DEC 98

DRAWING NUMBER	SHEET NO.	PLATE NO.	TITLE	REV. NO.	DATE
225/171-90-10	41	A603	Wall Sections		18 DEC 98
225/171-90-10	42	A604	Wall Sections		18 DEC 98
225/171-90-10	43	A605	Wall Sections		18 DEC 98
225/171-90-10	44	A606	Wall Sections		18 DEC 98
225/171-90-10	45	607	Interior Wall Partition Types		18 DEC 98
225/171-90-10	46	608	Interior Wall Partition Types		18 DEC 98
225/171-90-10	47	A701	Plan Details		18 DEC 98
225/171-90-10	48	A702	Plan Details		18 DEC 98
225/171-90-10	49	A703	Plan Details		18 DEC 98
225/171-90-10	50	A801	Miscellaneous Details		18 DEC 98
225/171-90-10	51	A802	Millwork Elevations		18 DEC 98
225/171-90-10	52	A803	Millwork Details		18 DEC 98
225/171-90-10	53	A901	Occupant Egress Plan & Code Criteria		18 DEC 98
225/171-90-10	54	A902	Room Identification Signage Plan		18 DEC 98
225/171-90-10	55	A903	Signage Details		18 DEC 98
225/171-90-10	56	A904	Signage Details		18 DEC 98
225/171-90-10	57	A905	Signage Details		18 DEC 98
225/171-90-10	58	S101	Structural General Notes		18 DEC 98
225/171-90-10	59	S102	Structural Abbreviations/Legend		18 DEC 98
225/171-90-10	60	S201	Foundation Plan - Area A		18 DEC 98
225/171-90-10	61	S202	Foundation Plan - Area B		18 DEC 98
225/171-90-10	62	S203	Suspended Structure Framing Plan - Area A		18 DEC 98
225/171-90-10	63	S204	Suspended Structure Framing Plan - Area B		18 DEC 98

DRAWING NUMBER	SHEET NO.	PLATE NO.	TITLE	REV. NO.	DATE
225/171-90-10	64	S205	Roof Framing Plan - Area A		18 DEC 98
225/171-90-10	65	S206	Roof Framing Plan - Area B		18 DEC 98
225/171-90-10	66	S301	North and South Elevations		18 DEC 98
225/171-90-10	67	S302	West Elevation		18 DEC 98
225/171-90-10	68	S303	East Elevation		18 DEC 98
225/171-90-10	69	S304	Braced Frame and Building Elevation		18 DEC 98
225/171-90-10	70	S305	Rigid Frame Type 1		18 DEC 98
225/171-90-10	71	S306	Rigid Frame Type 2		18 DEC 98
225/171-90-10	72	S401	Concrete Sections & Details		18 DEC 98
225/171-90-10	73	S402	Concrete Sections & Details		18 DEC 98
225/171-90-10	74	S501	Wall Sections & Details		18 DEC 98
225/171-90-10	75	S502	Wall Sections & Details		18 DEC 98
225/171-90-10	76	S503	Wall Sections & Details		18 DEC 98
225/171-90-10	77	S601	Steel Sections & Details		18 DEC 98
225/171-90-10	78	S602	Steel Sections & Details		18 DEC 98
225/171-90-10	79	S603	Roof Framing Sections & Details		18 DEC 98
225/171-90-10	80	S604	Braced Frame Sections & Details		18 DEC 98
225/171-90-10	81	S605	Platform Sections & Details		18 DEC 98
225/171-90-10	82	S606	Partition Support Sections & Details		18 DEC 98
225/171-90-10	83	S607	Steel Sections & Details		18 DEC 98
225/171-90-10	84	M001	Mechanical Legend		18 DEC 98
225/171-90-10	85	M301	Mechanical Floor Plan - Area A		18 DEC 98
225/171-90-10	86	M302	Mechanical Floor Plan - Area B		18 DEC 98
225/171-90-10	87	M401	Enlarged Mechanical Room Plans		18 DEC 98

DRAWING NUMBER	SHEET NO.	PLATE NO.	TITLE	REV. NO.	DATE
225/171-90-10	88	M402	Mechanical Sections		18 DEC 98
225/171-90-10	89	M601	Mechanical Details		18 DEC 98
225/171-90-10	90	M602	Mechanical Details		18 DEC 98
225/171-90-10	91	M701	Mechanical Details		18 DEC 98
225/171-90-10	92	M604	Flow Diagrams		18 DEC 98
225/171-90-10	93	M701	Mechanical Schedules		18 DEC 98
225/171-90-10	94	M801	Mechanical Controls Legend		18 DEC 98
225/171-90-10	95	M802	AHU-1 thru 3 Controls		18 DEC 98
225/171-90-10	96	M803	AHU-1 thru 3 Controls		18 DEC 98
225/171-90-10	97	M804	AHU-1 thru 3 Controls		18 DEC 98
225/171-90-10	98	M805	AHU-1 thru 3 Controls		18 DEC 98
225/171-90-10	99	M806	AHU-8 Controls		18 DEC 98
225/171-90-10	100	M807	AHU-8 Controls		18 DEC 98
225/171-90-10	101	M808	AHU-8 Controls		18 DEC 98
225/171-90-10	102	M809	AHU-9 Controls		18 DEC 98
225/171-90-10	103	M810	AHU-9 Controls		18 DEC 98
225/171-90-10	104	M811	AHU-9 Controls		18 DEC 98
225/171-90-10	105	M812	Boiler 1Controls		18 DEC 98
225/171-90-10	106	M813	Boiler 1 Controls		18 DEC 98
225/171-90-10	107	M814	Boiler 1Controls		18 DEC 98
225/171-90-10	108	M815	Boiler 1 Controls		18 DEC 98
225/171-90-10	109	M816	Boiler 2 Controls		18 DEC 98
225/171-90-10	110	M817	Boiler 2 Controls		18 DEC 98
225/171-90-10	111	M818	Boiler 2 Controls		18 DEC 98

DRAWING NUMBER	SHEET NO.	PLATE NO.	TITLE	REV. NO.	DATE
225/171-90-10	112	M819	Chiller Controls		18 DEC 98
225/171-90-10	113	M820	Chiller Controls		18 DEC 98
225/171-90-10	114	M821	Chiller Controls		18 DEC 98
225/171-90-10	115	M822	Miscellaneous Controls		18 DEC 98
225/171-90-10	116	M823	Valves and Dampers		18 DEC 98
225/171-90-10	117	M824	High Temperature Alarm Controls		18 DEC 98
225/171-90-10	118	M825	High Temperature Alarm Controls		18 DEC 98
225/171-90-10	119	M826	High Temperature Alarm Controls		18 DEC 98
225/171-90-10	120	P401	Plumbing Floor Plan - Area A		18 DEC 98
225/171-90-10	121	P402	Plumbing Floor Plan - Area B		18 DEC 98
225/171-90-10	122	P601	Enlarged Plumbing Plan and Isometrics		18 DEC 98
225/171-90-10	123	P701	Plumbing Schedules and Details		18 DEC 98
225/171-90-10	124	F201	Sprinkler Plan - Area A		18 DEC 98
225/171-90-10	125	F202	Sprinkler Plan - Area B		18 DEC 98
225/171-90-10	126	F301	Fire Alarm - Area A		18 DEC 98
225/171-90-10	127	F302	Fire Alarm - Area B		18 DEC 98
225/171-90-10	128	F401	Fire Alarm Riser Diagram		18 DEC 98
225/171-90-10	129	F501	Fire Sprinkler Details		18 DEC 98
225/171-90-10	130	E001	Abbreviations, Notes and Index		18 DEC 98
225/171-90-10	131	E002	Electrical Legend and Notes		18 DEC 98
225/171-90-10	132	E201	Electrical Site Plan		18 DEC 98
225/171-90-10	133	E202	Exterior Details I		18 DEC 98
225/171-90-10	134	E203	Exterior Details II		18 DEC 98
225/171-90-10	135	E204	Exterior Details III		18 DEC 98

DRAWING NUMBER	SHEET NO.	PLATE NO.	TITLE	REV. NO.	DATE
225/171-90-10	136	E205	Exterior Details IV		18 DEC 98
225/171-90-10	137	E206	Lightning Protection Plan		18 DEC 98
225/171-90-10	138	E207	Lightning Protection Details		18 DEC 98
225/171-90-10	139	E301	Lighting Plan - Area A		18 DEC 98
225/171-90-10	140	E302	Lighting Plan - Area A		18 DEC 98
225/171-90-10	141	E303	Fixture Details and Schedule		18 DEC 98
225/171-90-10	142	E304	Fixture Details		18 DEC 98
225/171-90-10	143	E401	Power Plan - Area A		18 DEC 98
225/171-90-10	144	E402	Power Plan - Area B		18 DEC 98
225/171-90-10	145	E403	Power Details		18 DEC 98
225/171-90-10	146	E404	One-Line Diagram and Schedules		18 DEC 98
225/171-90-10	147	E501	Enlarged Mech/Elec Room Plans		18 DEC 98
225/171-90-10	148	E601	Panel Schedules I		18 DEC 98
225/171-90-10	149	E602	Panel Schedules II		18 DEC 98
225/171-90-10	150	E701	Hardstand Grounding Plan and Details		18 DEC 98
225/171-90-10	151	E801	Communications Plan - Area A		18 DEC 98
225/171-90-10	152	E802	Communications Plan - Area B		18 DEC 98
225/171-90-10	153	E803	Comm One-Line and Details		18 DEC 98
225/171-90-10	154	E804	Comm Details		18 DEC 98

MODIFICATIONS TO CONTRACT DRAWINGS

- Drawing Sheet 1, Plate G001. On Location Map, delete Sequalitchew Pit as Disposal Area and change it to read "Landfill located Approximately 2 miles off Steilacoom Road on Solo Point Road." Rename Gravel Borrow shown east of Logistic Center to read Lincoln Pit.
- Drawing Sheet 10, Plate C1. Change chain-link fence around the hardstand to end at southwest corner of the CCTT Building. It will run along the line that is shown to be 12.33 M long.
- Drawing Sheet 15, Plate C6. Detail 5, Construction, Expansion Joint Detail, change "30 mm CTR" to "300 mm CTR."
- Drawing Sheet 15, Plate C6. Replace area around Transformer Pad & Electrical Vault with "Joint Layout and Transformer Pad Amendment to Sheet C6". See sketch attached at end of this section.
- Drawing Sheet 24, Plate A202. Change door between rooms 141 and 142 to swing into room 141 – Maintenance Room
- Drawing Sheet 24, Plate A202. Change door between rooms 137 and 142 to swing into room 137 – Simulator Bay
- Drawing Sheet 32, Plate A401. Detail 2, Room Finish Schedule, under Base add 23 – Wood Base; mark - 112, Room Name – Conference Room; change base material from 20 to 23; change base color from BA to BC.
- Drawing Sheet 34, Plate A403. On Door Schedule, Door 142A, change type from D10 to D9
- Drawing Sheet 34, Plate A403. On Door Schedule, Door 142B, change type from D9 to D10
- Drawing Sheet 34, Plate A403. On Visual Door Types D10, add Plastic Receiver Tray, of equal or greater width, directly below mail slot
- Drawing Sheet 34, Plate A403. Detail 3, Visual Frame Types, change head dimension from 50 mm to 100 mm.
- Drawing Sheet 34, Plate A403. Detail 4, Visual Window Types and Borrow Light Types, add W4 – Clear Anod. Aluminum, G1 Fixed glazing, 1600 mm wide by 1400 mm high, 50 mm frame and top of frame is 2400 mm above Fin. Flr.
- Drawing Sheet 37, Plate A406. Add detail "AD1" for the Projector Support shown on Plat A201, Room 129 – AAR. See drawing attached at end of this section.
- Drawing Sheet 38, Plate A501. Detail 1, Enlarged Toilet Plan, add soap dispensers above each wash basin.
- Drawing Sheet 44, A-606. Detail 1 Face Brick Type 1. There is another arrow to the same area calling for 40 mm metal deck. Delete referenced arrow and call out for 40mm metal deck.
- Drawing Sheet 46, Plate A608. Delete partition type P-17.
- Drawing Sheet 51, Plate A802. Detail 1, change Solid Plastic Top to Lam. Plastic Top.
- Drawing Sheet 52, Plate A803. Detail 2, change Plastic Laminate on 18 mm Particle Board Door to "Hardwood Door."
- Drawing Sheet 54, Plate A902. Signs B16 and B 46 through B49, No Message Required. Reference A201 for location of room divider (accordion partition).
- Drawing Sheet 72, Plate S401. Delete Detail 10. Plate S402, Detail 5. Add the following Note - Expansion joint (between edge of slab and wall). Joint to be filled with mastic. Provide 400 mm smooth dowel bars at 300 mm OC w/ diameter equal 16 mm flush against underside of perpendicular slab reinforcement. Grease all dowel ends in wall.
- Drawing Sheet 126, Plate F301. Room 110 – Unisex H.C. Shower, add visual (strobe only) fire alarm device on south wall
- Drawing Sheet 126, Plate F301. Room 111 – Tech. Library, add visual (strobe only) fire alarm device on north wall

- Drawing Sheet 128, Plate F401. On sheet grid B-3, delete title "MONACO RETRANSMISSION ZONE LIST." and replace with "KINGFISHER COMPATIBLE RETRANSMISSION ZONE LIST."
- Drawing Sheet 132, Plate E201. In Note 8, change "type XLP" to "type EPR"
- Drawing Sheet 134, Plate E203. Change Note 4 to read "15KV cutouts with 200 ampere fuses"
- Drawing Sheet 134, Plate E203. In Note 9, change "#6 copper" to "#4 copper"
- Drawing Sheet 134, Plate E203. In Note 24, change "#6 copper" to "#4 copper"
- Drawing Sheet 136, Plate E205. Delete Detail 5 "Outdoor Unit Substation Elevation" and replace with revised Detail 5 "Vault Elevation Detail" (Drawing E205B). Also, add new Detail "Vault Plan Detail" (Drawing E205A), and add new Detail "Electrical Vault Detail" (Drawing E204A). See drawings with the new details attached at end of this section.
- Drawing Sheet 137, Plate E206. Note 3 – Delete "(67.2 square millimeters)"
- Drawing Sheet 137, Plate E206. Note 4 – Delete.
- Drawing Sheet 139, Plate E301, and Drawing Sheet 140, Plate E302. Modify emergency lighting circuitry as follows:
  - Delete wiring of all exit lights to a normal power circuit.
  - Delete emergency battery pack from all type "A" light fixtures.
  - Delete all wiring of emergency light fixture type "E" to a normal power circuit.
  - All exit lights and emergency light fixtures type "E" shall be circuited on a separate circuit to the Inverter, located in Mechanical / Electrical Room 138.
  - Light fixtures type "L" located in the ceiling of the Simulator Bay Room 137 shall remain on one separate circuit connected to the Inverter.
  - The Inverter shall be provided with (4) circuit breakers, (2) normally off and (2) normally on. The type "L" emergency light fixtures shall be connected to the normally open circuit breaker, and the exit lights and emergency light fixtures type "E" to the normally closed circuit breaker. The remaining (2) circuit breakers will be labeled "Spare."
- Drawing Sheet 140, Plate E302. In Note 2, delete last two (2) lines and replace with "Breaker. Inverter equal to Lithonia Model No. ELV-LC-3000-277-12HR-OCB or equal, located in Mechanical / Electrical Room 138.
- Drawing Sheet 143, Plate E401. Bus Duct homerun in Room 116 and 117, change "DPA-22" to "DPA-21", with conductors per Feeder Schedule shown on Plate E404.
- Drawing Sheet 144, Plate E402. Change Note 1 to read "Provide weather-proof junction boxes surface mounted on exterior wall for cable connections between trailers and networking room."
- Drawing Sheet 145, Plate E403. Delete Detail 3 "Recessed Wall Box Detail" and replace with revised Detail 3 "Recessed Wall Box Detail" (Drawing E204B). See Drawing E204B attached at end of this section.
- Drawing Sheet 149, Plate E602. Motor Control Center MCC1 Schedule – Circuit 2, delete "VSD" in starter type. Circuit 3, delete "VSD" in starter type.

STANDARD DETAILS BOUND IN THE SPECIFICATIONS

DRAWING NUMBER	SHEET NUMBER	TITLE	DATE
SECTION 01501 - CONSTRUCTION FACILITIES AND TEMPORARY CONTROLS			
	1 & 2	U.S. Army Project Construction Sign	84JUN20

1	Hard Hat Sign	10SEP90

LIST OF SKETCHES/DRAWINGS ATTACHED
(Drawings 204A, 204B, 205A & 205B print on 11” X 17” paper)

- Joint Layout and Transformer Pad Amendment to Sheet C6
- Section at Projector Support, Sketch AD1
- Electrical Vault Detail, Drawing 204A
- Recessed Wall Box Detail (NOTE: incorrect title on drawing), Drawing 204B
- Vault Details, Drawing 205A
- Vault Details, Drawing 205B

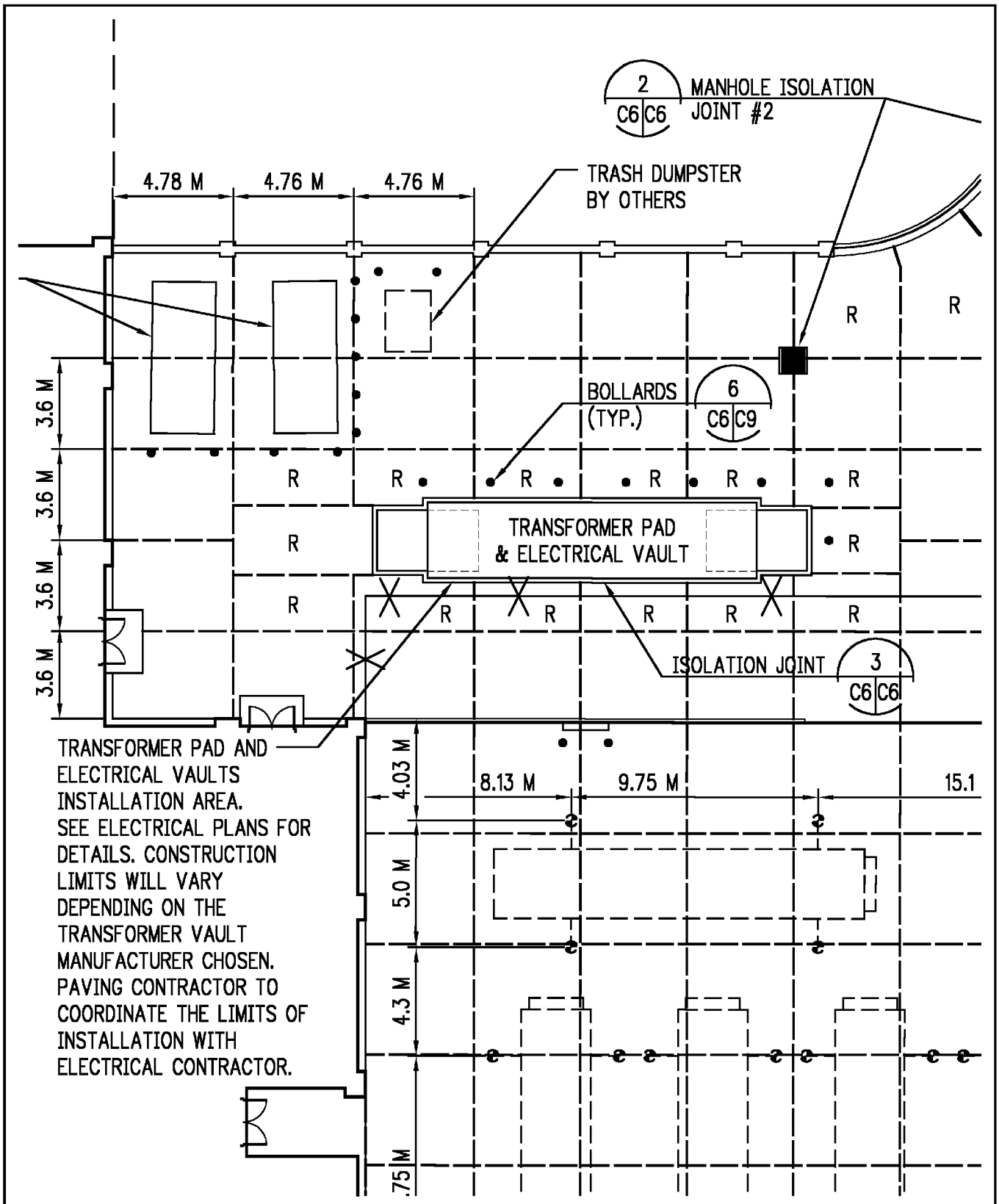

kpff Consulting Engineers
1201 Third Avenue, Suite 900
Seattle, Washington 98101
(206) 622-5822 Fax (206) 622-8130

CLOSE COMBAT TACTICAL TRAINER (CCTT)

JOINT LAYOUT AND TRANSFORMER PAD
AMENDMENT TO SHEET C6

DATE:	2/24/99	DRAWN BY:	TSR	JOB No:	97490.3
SCALE:	1:200	CHECKED BY:	DES	SHEET:	1 OF 1

AUTOCAD DRAWING NAME: CCTTMT.DWG PLOTTING DATE: 2/24/99 – 8:15 AM

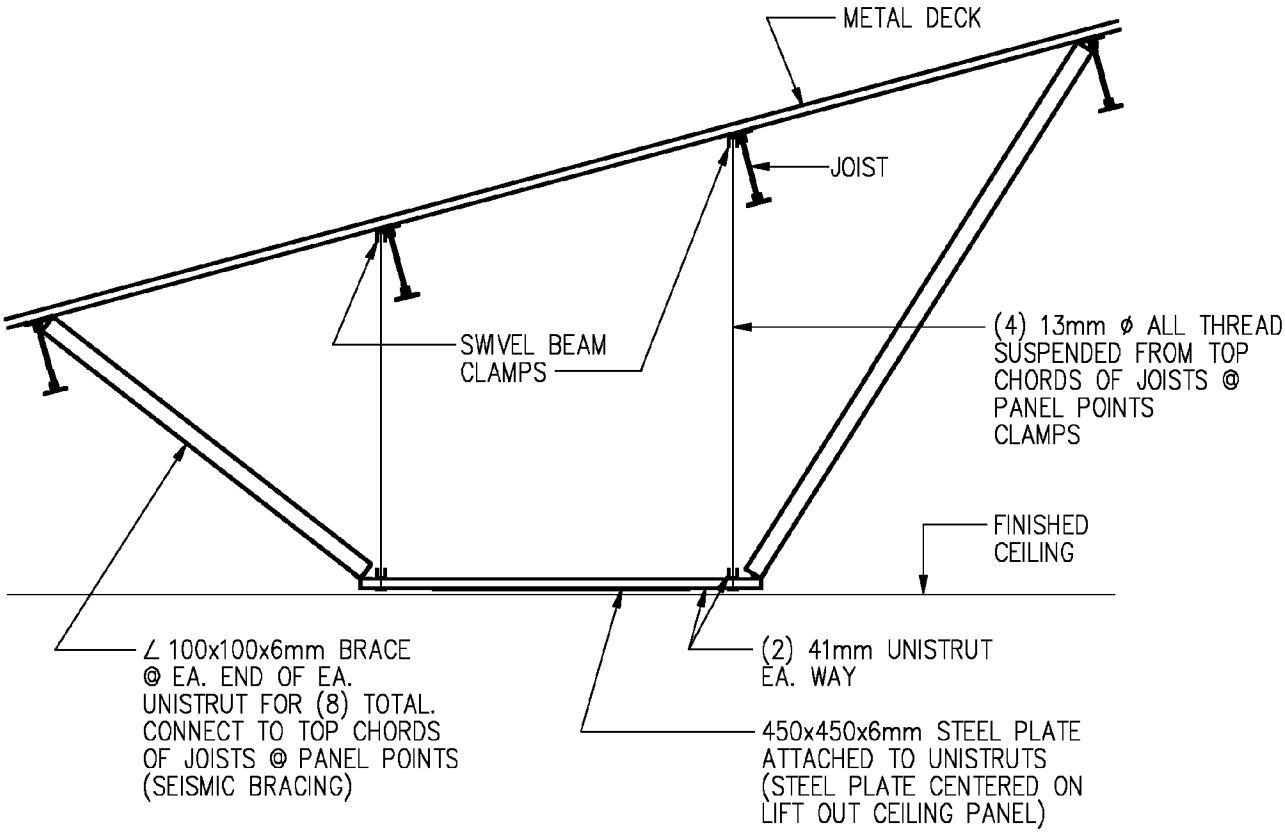

1 AD1 AD1

SECTION @ PROJECTOR SUPPORT

SCALE: NONE

ADM8X11

C.H. GUERNSEY & COMPANY *Engineers · Architects · Consultants*	**CLOSE COMBAT TACTICAL TRAINER (CCTT)** FT. LEWIS, WASHINGTON	
PREPARED BY: K. GERLICH **APPROVED BY:** J. LUTHER	**PROJECT NAME:** **AMENDMENT NO:**	**SKETCH NO:** AD1

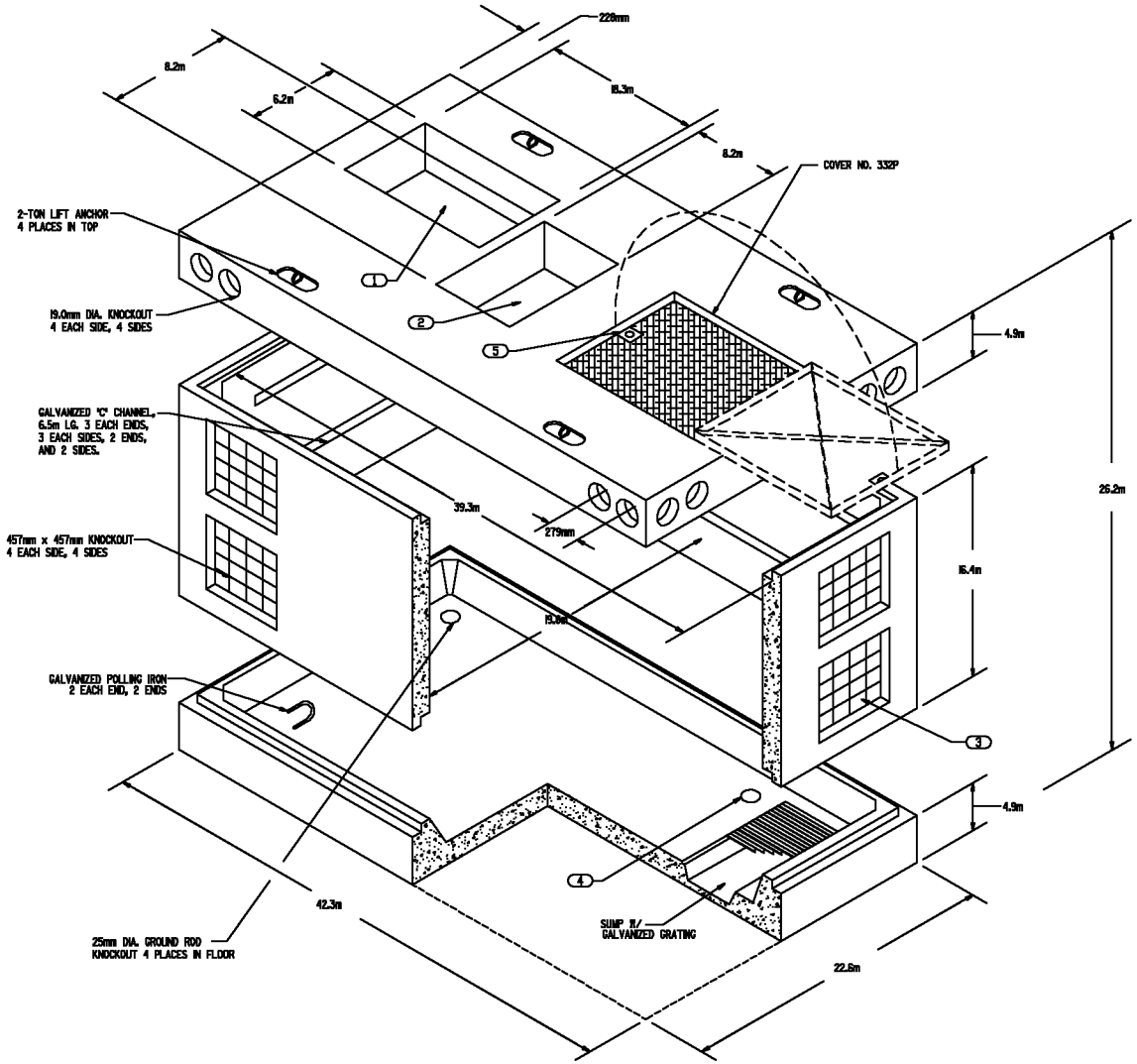

3 **ELECTRICAL VAULT DETAIL**

E402 E403 NOT TO SCALE

NOTES: (THIS SHEET ONLY)

1. TRANSFORMER THROAT OPENING. EXACT LOCATION AND DIMENSION SHALL BE DETERMINED BY SELECTION OF EQUIPMENT MANUFACTURER.
2. HV SWITCH CONDUIT OPENING. EXACT LOCATION AND DIMENSION SHALL BE DETERMINED BY SELECTION OF EQUIPMENT MANUFACTURER.
3. COORDINATE ALL CONDUIT OPENINGS WITH THE PAD LOCATION.
4. PROVIDE GROUND RODS IN QUANTITY AS REQUIRED BY FT. LEWIS DPW.
5. PROVIDE PAD-LOCKING PROVISIONS AS DIRECTED BY FT. LEWIS DPW.

GENERAL NOTES: (THIS SHEET ONLY)

A. CONTRACTOR TO PROVIDE EXCAVATION TO ALLOW FOR OVER-ALL ASSEMBLED VAULT AND BEDDING MATERIAL CONSISTING OF 76mm TO 152mm OF COMPACTED SAND OR GRAVEL, GRADED LEVEL.

B. CONTRACTOR SHALL BACKFILL AROUND ALL VAULTS WITH COMPACTABLE MATERIAL SUCH AS PER GRAVEL, SAND OR SELECT BACKFILL MATERIAL. BACKFILLING SHALL NOT BE ACCOMPLISHED UNTIL VAULT IS FULLY ASSEMBLED.

C. CONTRACTOR SHALL GROUT ALL SECTIONS OF THE VAULTS AS RECOMMENDED BY THE MANUFACTURER. GROUT SHALL BE A CEMENT GROUT OF AT LEAST TWO PARTS SAND AND ONE PART CEMENT WITH SUFFICIENT WATER TO FORM A WORKABLE MIX. APPLY MIXTURE TO INSURE FILLING OF ALL VOIDS IN JOINTS.

D. ELECTRICAL VAULT SHALL BE UTILITY VAULT CO. 62-LA OR EQUAL.

US ARMY CORPS OF ENGINEERS SEATTLE DISTRICT

Designed by D. ELLIS
Drawn by M. WHEELER
Checked by R. HAWLE
Date DEC. 16, 2000
Design file no.

U.S. ARMY ENGINEER DISTRICT, SEATTLE
CORPS OF ENGINEERS
SEATTLE, WASHINGTON

CLOSE COMBAT TACTICAL TRAINER (CCTT)
FORT LEWIS, WASHINGTON

ELECTRICAL VAULT DETAIL

Plate number
E204A

Sheet 145 Of

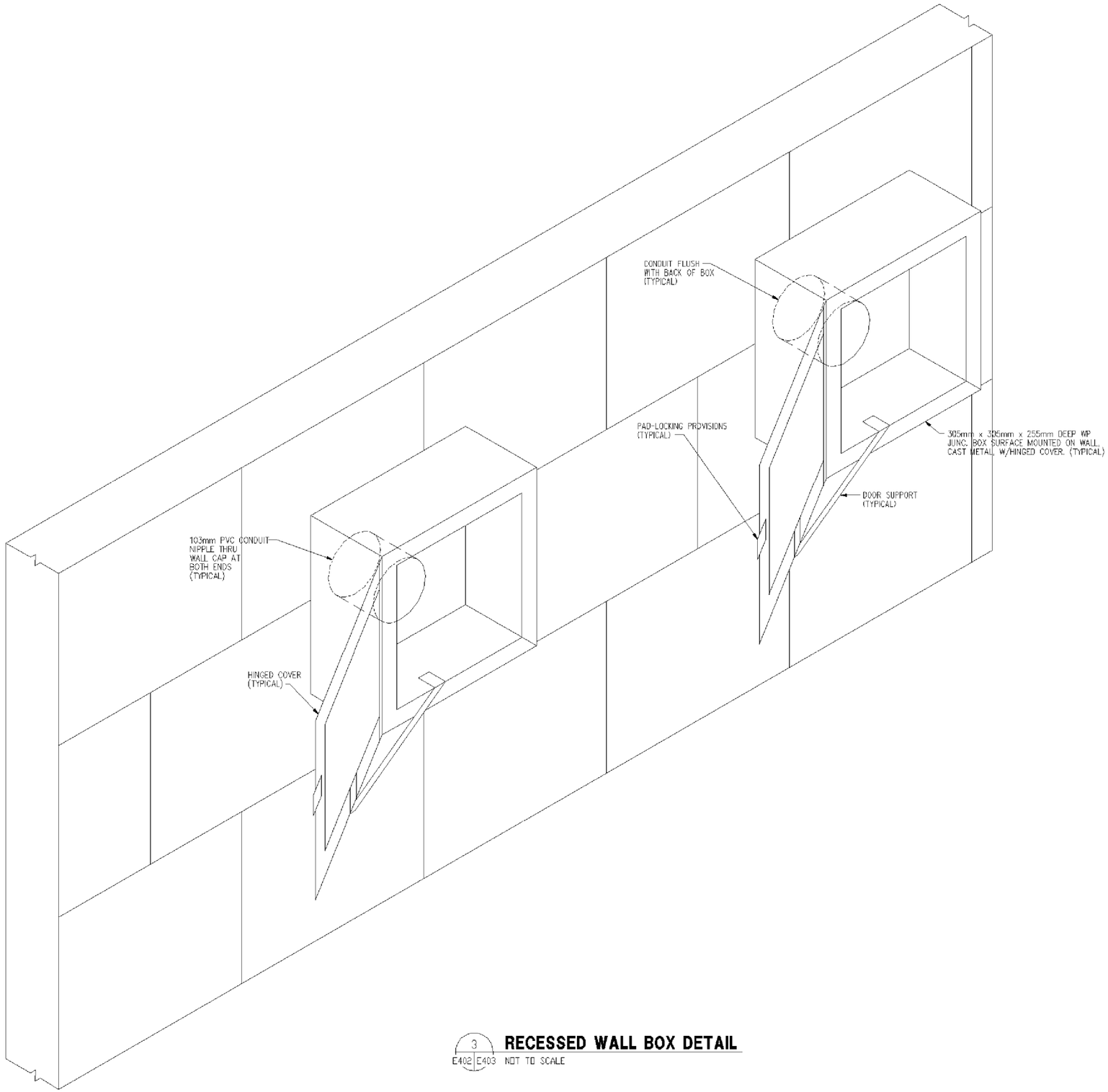

3
E402 E403

RECESSED WALL BOX DETAIL

NOT TO SCALE

US ARMY CORPS OF ENGINEERS SEATTLE DISTRICT

Symbol	Description	Date	Appr.	Symbol	Description	Date	Appr.

Date: DEC. 18, 1998
Design file no.

Designed by: D. ELLIS
Drawn by: M. WHEELER
Checked by: R. HINKLE

U.S. ARMY ENGINEER DISTRICT, SEATTLE
CORPS OF ENGINEERS
SEATTLE, WASHINGTON

C.H. GUERRIER & COMPANY
Engineers - Architects - Consultants
5500 Kerry Street Bellevue, Washington 98006-1518 USA
425-637-3015

CLOSE COMBAT TACTICAL TRAINER (CCTT)
FORT LEWIS, WASHINGTON

ELECTRICAL VAULT DETAIL

Plate number:
E204B
Sheet 145 Of

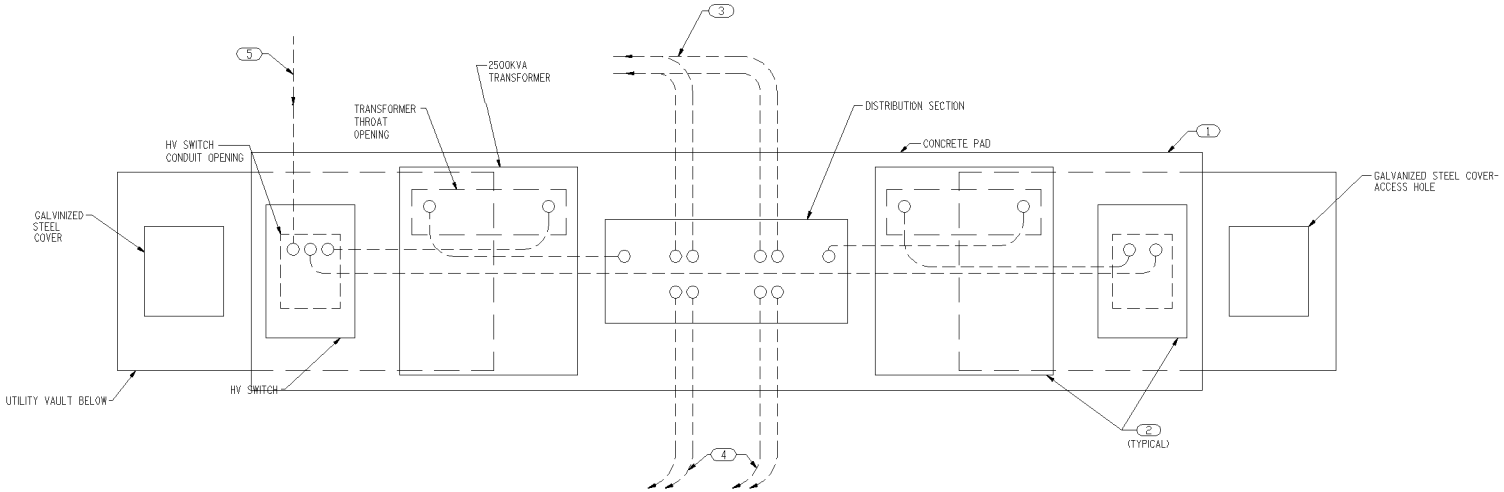

4 VAULT PLAN DETAIL

E201 E205 NOT TO SCALE

NOTES: THIS SHEET ONLY)

1. CONTRACTOR TO COORDINATE FOUNDATION DESIGN TO MATCH SELECTED MANUFACTURER OF SWITCHGEAR. CONCRETE PAD SHALL BE A MINIMUM OF 2500mm WIDE x 9800mm LONG.
2. COORDINATE EQUIPMENT LOCATION AND PLACEMENT TO PROVIDE 6" CLEARANCE TO EDGE OF PAD.
3. SECONDARY FEEDERS TO CHILLER UNITS, COORDINATE ROUTING WITH SHEET E201.
4. SECONDARY FEEDERS TO THE CCTT, COORDINATE ROUTING WITH SHEET E201.
5. PRIMARY FEEDER FROM RISER POLE.

US ARMY CORPS
OF ENGINEERS
SEATTLE DISTRICT

Symbol	Description	Date	Appr.	Symbol	Description	Date	Appr.

U.S. ARMY ENGINEER DISTRICT, SEATTLE
CORPS OF ENGINEERS
SEATTLE, WASHINGTON

Designed by: D. ELLIS
Drawn by: M. WHEELER
Checked by: R. HINKLE
Date: DEC. 18, 1998
Design file no.

CAS GUERNSEY & COMPANY
Engineers • Architects • Consultants
2121 N. California Blvd., Suite 1
Walnut Creek, CA 94596-3287
Stockton • Fresno
925/935-2090

CLOSE COMBAT TACTICAL TRAINER (CCTT)
FORT LEWIS, WASHINGTON

VAULT DETAILS

Plate number:
E205A

Sheet 145 Of

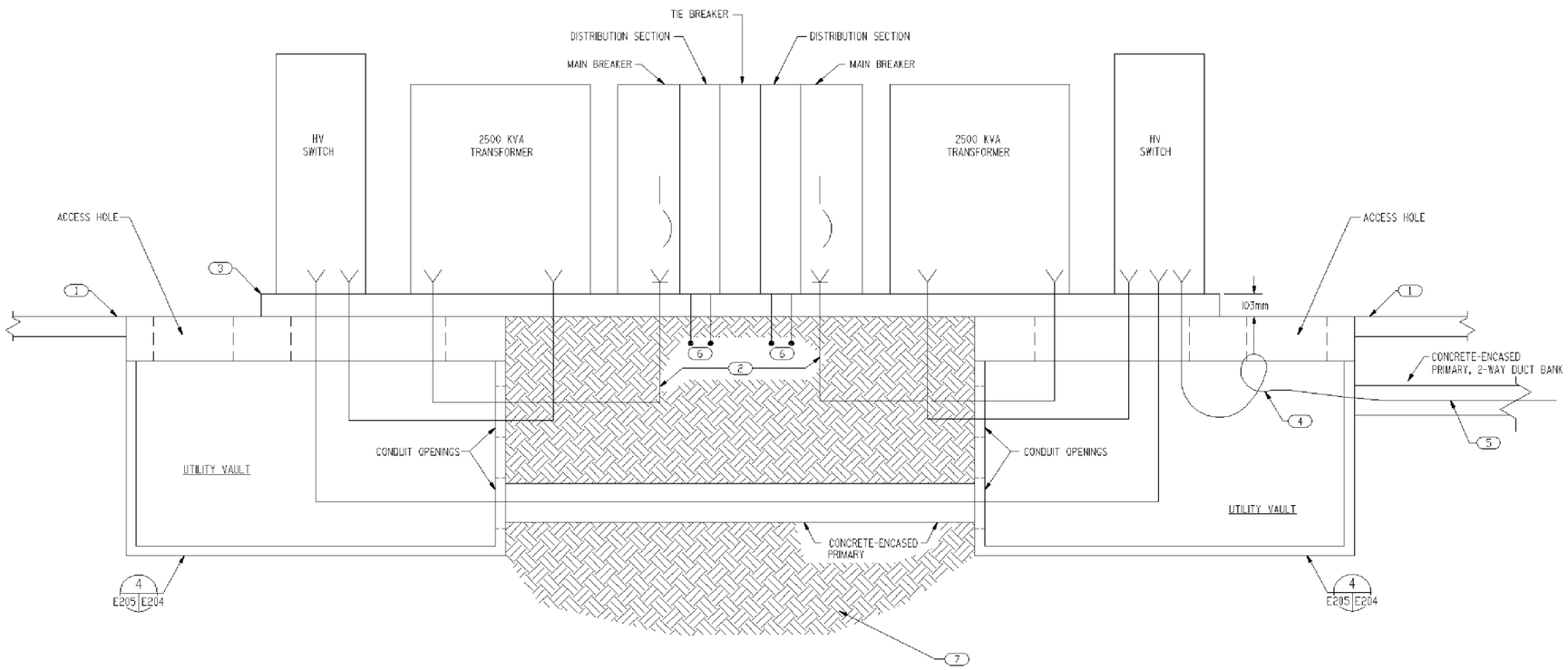

5 VAULT ELEVATION DETAIL

E201 E205 NOT TO SCALE

NOTES: (THIS SHEET ONLY)

1. END OF CONCRETE PAVEMENT, AREA OF TRANSFORMER/UNIT SUBSTATION PAD TO BE BLOCKED OUT. REFER TO CIVIL DRAWINGS.
2. SECONDARY FEEDERS, (9) 129mm CONDUIT AND (4) 700 KCMIL CONDUCTORS. REFER TO FEEDER SCHEDULE, SHEET E404.
3. CHAMFER ALL EDGES OF CONCRETE PAD.
4. PROVIDE 360 DEGREE TURN OF INCOMING PRIMARY CABLES. SUPPORT PRIMARY CABLES ON WALL-MOUNTED GALVANIZED 'C' CHANNELS.
5. PRIMARY CABLE, (2) 102mm CONDUITS IN CONCRETE DUCTBANK. (1) CONDUIT WITH 3 #4/0-15KV EPR AND 1 #6 GND. FROM RISER POLE.
6. SECONDARY CONDUITS TO CCTT AND CHILLERS, COORDINATE ROUTING WITH SHEET E201.
7. SUBGRADE COMPACTED TO 95% OF MAXIMUM DENSITY PER ASTM D-1557.

US ARMY CORPS OF ENGINEERS SEATTLE DISTRICT

Symbol	Description	Date	Appr.	Symbol	Description	Date	Appr.

Designed by: D. ELLIS
Date: DEC. 18, 1998
Drawn by: M. WHEELER
Design file no.
Checked by: R. HINKLE

U.S. ARMY ENGINEER DISTRICT, SEATTLE
CORPS OF ENGINEERS
SEATTLE, WASHINGTON

C.H. GUERRIER & COMPANY
Engineers • Architects • Consultants
5455 Kane's Grand Boulevard
Gainesville, Georgia 30504-7512-0017
404-867-0015
GUERRIER

CLOSE COMBAT TACTICAL TRAINER (CCTT)
FORT LEWIS, WASHINGTON

VAULT DETAILS

Plate number:
E205B
Sheet 145 Of

END OF SECTION

General Decision Number WA980002

Superseded General Decision No. WA970002

State: Washington

Construction Type:
BUILDING

County(ies):

CHELAN	KITSAP	PIERCE
CLALLAM	KITTITAS	SNOHOMISH
GRAYS HARBOR	LEWIS	THURSTON
JEFFERSON	MASON	
KING	PACIFIC	

BUILDING CONSTRUCTION PROJECTS (does not include residential construction consisting of single family homes and apartments up to and including 4 stories)

Modification Number	Publication Date
0	02/13/1998
1	02/20/1998
2	03/06/1998
3	03/27/1998
4	04/10/1998
5	06/12/1998
6	06/19/1998
7	07/10/1998
8	07/24/1998
9	07/31/1998
10	08/28/1998
11	09/04/1998
12	09/11/1998
13	10/09/1998
14	10/16/1998
15	11/20/1998
16	01/08/1999

COUNTY(ies):

CHELAN	KITSAP	PIERCE
CLALLAM	KITTITAS	SNOHOMISH
GRAYS HARBOR	LEWIS	THURSTON
JEFFERSON	MASON	
KING	PACIFIC	

ASBE0007A 06/01/1998

	Rates	Fringes
ASBESTOS WORKERS/INSULATORS: (Includes application of all insulating materials, protective coverings, coating and finishes to all types of mechanical systems)	23.41	8.85

BOIL0242B 10/01/1998

	Rates	Fringes
CHELAN AND KITTITAS COUNTIES		
BOILERMAKERS	24.07	9.81

BOIL0502B 10/01/1996

	Rates	Fringes
CLALLAM, GRAYS HARBOR, JEFFERSON, KING, KITSAP, LEWIS, MASON, PACIFIC, PIERCE, SNOHOMISH AND THURSTON COUNTIES		
BOILERMAKERS	24.32	9.01

BRWA0001A 05/01/1998

	Rates	Fringes
CLALLAM, GRAYS HARBOR, JEFFERSON, KING, KITSAP, LEWIS, MASON, PACIFIC (NORTHERN HALF), PIERCE, SNOHOMISH AND THURSTON COUNTIES		
BRICKLAYERS	25.50	6.17

BRWA0001F 06/01/1997

	Rates	Fringes
PACIFIC COUNTY (SOUTHERN PART)		
BRICKLAYERS	23.86	6.21
MARBLE MASONS	24.86	6.21

BRWA0001G 05/01/1997

	Rates	Fringes
PACIFIC (SOUTHERN PORTION) COUNTY		

TILE SETTER AND TERRAZZO WORKERS	22.18	5.82
TILE AND TERRAZZO FINISHERS	16.77	4.27

BRWA0001H 06/01/1998

	Rates	Fringes
CLALLAM, GRAYS HARBOR, JEFFERSON, KING, KITSAP,LEWIS, MASON, PACIFIC (NORTHERN HALF), PIERCE, THURSTON AND SNOHOMISH COUNTIES		
TILE AND TERRAZZO WORKERS	23.42	5.61
TILE AND TERRAZZO FINISHERS	18.91	5.46

BRWA0003A 06/01/1998

	Rates	Fringes
CHELAN AND KITTITAS COUNTIES		
BRICKLAYERS	21.79	6.83

BRWA0003E 04/01/1995

	Rates	Fringes
CLELAN AND KITTITAS		
TERRAZZO WORKERS	17.50	5.38
TILE LAYER	17.00	5.38
TILE AND TERRAZZO FINISHERS	13.70	5.38

CARP0770E 06/01/1998

	Rates	Fringes
WESTERN WASHINGTON: CLALLAM, GRAYS HARBOR, JEFFERSON, KING, KITSAP, LEWIS, MASON, PACIFIC (NORTH), PIERCE, SNOHOMISH AND THURSTON COUNTIES		
CARPENTERS AND DRYWALL APPLICATORS	24.50	6.27
CARPENTERS ON CREOSOTE MATERIAL	23.60	6.27
INSULATION APPLICATORS	21.40	6.27
SAWFILERS, STATIONARY POWER SAW OPERATORS, FLOOR FINISHER, FLOOR LAYER, SHINGLER, FLOOR SANDER OPERATORS OF OTHER STATIONARY WOOD WORKING TOOLS	24.63	6.27
MILLWRIGHT AND MACHINE ERECTORS	25.50	6.27
ACOUSTICAL WOKRERS	24.66	6.27
PILEDRIVER, DRIVING, PULLING, CUTTING, PLACING COLLARS, SETTING, WELDING OR CRESOTE TREATED MATERIAL, ALL PILING	24.70	6.27

PILDRIVER, BRIDGE DOCK & WHARF CARPENTERS	24.50	6.27
DIVERS	60.52	6.27
DIVERS TENDER	26.92	6.27

(HOURLY ZONE PAY APPLICABLE TO ALL CLASSIFICATIONS EXCEPT MILLWRIGHT AND PILEDRIVER)

Hourly Zone Pay shall be paid on jobs located outside of the free zone computed from the city center of the following listed cities:

Seattle	Olympia	Bellingham
Auburn	Bremerton	Anacortes
Renton	Shelton	Yakima
Aberdeen-Hoquiam	Tacoma	Wenatchee
Ellensburg	Everett	Port Angeles
Centralia	Mount Vernon	Sunnyside
Chelan	Pt. Townsend	

Zone Pay	
0 -25 radius miles	Free
25-35 radius miles	$1.00/hour
35-45 radius miles	$1.15/hour
45-55 radius miles	$1.35/hour
Over 55 radius miles	$1.55/hour

(HOURLY ZONE PAY - MILLWRIGHTS AND PILEDRIVERS ONLY)

Hour Zone Pay shall be computed from Seattle Union Hall, Tacoma City center, and Everett City center

Zone Pay	
0 -25 radius miles	Free
25-45 radius miles	$ .70/hour
Over 45 radius miles	$1.50/hour

Millwrights and Piledrivers who reside in Aberdeen, Bellingham, Port Angeles, Mount Vernon, Olympia, Wenatchee, or Yakima Local Union jurisdication areas, working on jobs in their respective area, shall have their Zone Pay measured from their respective city center

CENTRAL WASHINGTON: CHELAN AND KITTITAS COUNTIES

CARPENTERS AND DRYWALL APPLICATORS	19.77	6.27
CARPENTERS ON CREOSOTED MATERIALS	19.87	6.27
INSULATION APPLICATORS	19.77	6.27
SAWFILER, STATIONARY POWER SAW OPERATORS, FLOOR FINISHER, FLOOR LAYER, SHINGLERS, FLOOR SANDER OPERATOR AND OPERATORS OF OTHER STATIONARY WOOD WORKING TOOLS	19.90	6.27
MILLWRIGHTS AND MACHINE ERECTORS	25.50	6.27
ACCOUSTICAL WORKERS	20.03	6.27
PILDRIVER, DRIVING, PULLING, CUTTING, PLACING COLLARS, SETTING, WELDING, OR CREOSOTE TREATED MATERIAL, ALL PILING	24.70	6.27
PILEDRIVER, BRIDGE DOCK & WHARF CARPENTERS	24.50	6.27
DIVERS	58.07	6.27
DIVERS TENDER	25.83	6.27

CARP9003A 06/01/1998

	Rates	Fringes

PACIFIC COUNTY (South of a straight line made by extending the north boundary line of Wahkiakum County west to Willapa Bay to the Pacific Ocean, and thence north through the natural waterway to the Pacific Ocean (this will include the entire peninsula west of Willapa Bay)

SEE ZONE DESCRIPTION FOR CITIES BASE POINTS

ZONE 1:

CARPENTERS	24.27	6.42
DRYWALL, ACOUSTICAL & LATHERS	20.48	6.27
FLOOR LAYERS & FLOOR FINISHERS (the laying of all hardwood floors nailed and mastic set, parquet and wood-type tiles, and block floors, the sanding and finishing of floors, the preparation of old and new floors when the materials mentioned above are to be installed; INSULATORS (fiberglass and similar irritating material)	24.42	6.42
MILLWRIGHTS	24.77	6.42
PILEDRIVERS	24.77	6.42
DIVERS	55.03	6.42
DIVERS TENDERS	25.59	6.42

Zone Differential (Add to Zone 1 rates):
Zone 2 - $0.85
Zone 3 - 1.25
Zone 4 - 1.70
Zone 5 - 2.00
Zone 6 - 3.00

BASEPOINTS: GOLDENDALE, LONGVIEW, AND VANCOUVER

ZONE 1: Projects located within 30 miles of the respective city hall of the above mentioned cities
ZONE 2: Projects located more than 30 miles and less than 40 miles of the respective city of the above mentioned cities
ZONE 3: Projects located more than 40 miles and less than 50 miles of the respective city of the above mentioned cities
ZONE 4: Projects located more than 50 miles and less than 60 miles of the respective city of the above mentioned cities.
ZONE 5: Projects located more than 60 miles and less than 70 miles of the respective city of the above mentioned cities

ZONE 6: Projects located more than 70 miles of the respected city of the above mentioned cities

---

ELEC0046B 06/01/1998

	Rates	Fringes
CALLAM, JEFFERSON, KING AND KITSAP COUNTIES		
ELECTRICIANS	27.50	7.50+3%
CABLE SPLICERS	30.25	7.50+3%

ELEC0046C 06/03/1996

	Rates	Fringes
CALLAM, JEFFERSON, KING, KITSAP COUNTIES		
SOUND AND COMMUNICATION TECHNICIAN	17.38	2.75+3%

SCOPE OF WORK

Includes the installation, testing, service and maintenance, of the following systems which utilize the trabsmission and/or transference of voice, sound vision and digital for commercial, education, security and entertainment purposes for the following: TV monitoring and surveillance, background-foreground music, intercom and telephone interconnect, inventory control systems, microwave transmission, multi-media, multiplex, nurse call system, radio page, school intercom and sound, burglar alarms, fire alarms and life safety systems (hang, terminate devices and panels and to conduct functional and systems tests), and low voltage master clock systems.

WORK EXCLUDED
Raceway systems are not covered (excluding Ladder-Rack for the purpose of the above listed systems). Chases and/or nipples (not to exceed 10 feet) may be installed on open wiring systems.

Energy management systems.

SCADA (Supervisory Control and Data Acquisition) when not intrinsic to the above listed systems (in the scope).

ELEC0076A 07/01/1998

GRAYS HARBOR, LEWIS, MASON, PACIFIC, PIERCE, THURSTON COUNTIES	Rates	Fringes
ELECTRICIANS	24.37	9.04+3%
CABLE SPLICERS	26.81	9.04+3%

ELEC0076D 06/01/1997

GRAYS HARBOR, LEWIS, MASON, PACIFIC, PIERCE AND THURSTON COUNTIES	Rates	Fringes
SOUND AND COMMUNICATIONS TECHNICIAN	16.88	3.79

SCOPE OF WORK

Includes the installation, testing, service and maintenance, of the following systems which utilize the transmission and/or transference of voice, sound, vision and digital for commercial, education, security and entertainment purposes for the following: TV monitoring and surveillance, background-foreground music,

intercom and telephone interconnect, inventory control systems, microwave transmission, multi-media, multiplex, nurse call system, radio page, school intercom and sound, burglar alarms and low voltage master clock systems.

WORK EXCLUDED
Raceway systems are not covered (excluding Ladder-Rack for the purpose of the above listed systems). Chases and/or nipples (not to exceed 10 feet) may be installed on open wiring systems.

Energy management systems.

SCADA (Supervisory Control and Data Acquistion) when not intrinsic to the above listed systems (in the scope).

Fire alarm systems when installed in raceways (including wire and cable pulling) shall be performed at the electrician wage rate, when either of the following two (2) conditions apply:

1. The project involves new or major remodel building trades construction.

2. The conductors for the fire alarm system are installed in conduit.

ELEC0112B 06/01/1998

	Rates	Fringes
KITTITAS COUNTY		
ELECTRICIANS	26.20	6.83+3%
CABLE SPLICERS	27.51	6.83+3%

ELEC0112G 03/16/1996

	Rates	Fringes
KITTTITAS COUNTY		
COMMUNICATION & SOUND TECHNICIANS	15.97	3.61

SCOPE OF WORK

Includes the installation, testing, service and maintenance, of the following systems which utilize the transmission and/or

transference of voice, sound vision and digital for commercial,

education, security and entertainment purposes for the following: TV monitoring and surveillance, background-foreground music, intercom and telephone interconnect, inventory control systems, microwave transmission, multi-media, multiplex, nurse call system, radio page, school intercom and sound, burglar alarms, and low voltage master clock systems.

WORK EXCLUDED
Raceways systems are not covered (excluding Ladder-Rack for the purpose fo the above listed systems). Chases and/or or nipples (not to exceed 10 feet) may be installed on open wiring systems.

Energy management systems.

SCADA (Supervisory Control and Data Acquisition) when not intrinsic to the above lsited systems (in the scope).

Fire alarm systems when installed in raceways (including wire and cable pulling) shall be performed at the electrician wage rate, when either of the following two (2) conditions apply:

1. The project involves new or major remodel building trades construction.

2. The conductors for the fire alarm system are installed in conduit.

ELEC0191A 06/01/1998

	Rates	Fringes
SNOHOMISH COUNTY		
ELECTRICIANS	25.34	6.63+3%
CABLE SPLICERS	27.87	6.63+3%
CHELAN COUNTY		
ELECTRICIANS	23.19	6.63+3%
CABLE SPLICERS	25.51	6.63+3%

ELEC0191E 05/31/1997

	Rates	Fringes
CHELAN AND SNOHOMISH COUNTIES		
SOUND AND COMMUNICATIONS		
TECHNICIANS	17.69	2.30+3%

SCOPE OF WORK

Includes the installation testing, service and maintenance, of the following systems which utiolize the transmission and/or transference of voice, sound vision and digital for commercial, education, security and entertainment purposes for the following: TV monitoring and surveillance, backround-foreground music, intercom and telephone interconnect, inventor control systems, microwave transmission, multi-media, multiplex, nurse call system, radio page, school intercom and sound, burglar alarms,

and low voltage master clock systems.

WORK EXCLUDED
Raceway systems are not covered (excluding Ladder-Rack for the purpose of the above listed systems). Chases and/or nipples (not to exceed 10 feet) may be installed on open wiring systems.

Energy management systems.

SCADA (Supervisory Control and Data Acquisition) when not intrinsic to the above listed systems (in the scope).

Fire alarm systems when installed in raceways (including wire and cable pulling) shall be performed at the electrician wage rate, when either of the following two (2) conditions apply:

1. The project involves new or major remodel building trades construction.

2. The conductors for the fire alarm system are installed in conduit.

ELEV0019B 07/01/1998

	Rates	Fringes
CHELAN, CLALLAM, GRAYS HARBOR, JEFFERSON, KING, KITSAP, KITTITAS, LEWIS, MASON, PIERCE, SNOHOMISH AND THURSTON COUNTIES		
ELEVATOR MECHANICS	29.105	6.405+a

FOOTNOTE a: Vacation Pay: 8% with 5 or more years of service, 6% for 6 months to 5 years service. Paid Holidays: New Years Day, Memorial Day, Independence Day, Labor Day, Thanksgiving Day and Friday after, and Christmas Day.

ELEV0023B 04/01/1998

	Rates	Fringes
PACIFIC COUNTY		
ELEVATOR MECHANIC	29.185	6.405+a

FOOTNOTE a: Vacation Pay: 8% with 5 or more years of service, 6% for 6 months to 5 years service. Paid Holidays: Memorial Day, Independence Day, Labor Day, Thanksgiving Day and Friday after, and Christmas Day, and New Years Day.

ENGI0302B 06/01/1998

	Rates	Fringes
CHELAN (WEST OF THE 120TH MERIDIAN), CLALLAM, GRAYS HARBOR, JEFFERSON, KING, KITSAP, KITTITAS, MASON AND SNOHOMISH COUNTIES		

ON PROJECTS DESCRIBED IN FOOTNOTE A BELOW, THE RATE FOR EACH GROUP SHALL BE 90% OF THE BASE RATE PLUS FULL FRINGE BENEFITS.

ON ALL OTHER WORK, THE FOLLOWING RATES APPLY.

POWER EQUIPMENT OPERATORS:
Zone 1 (0-25 radius miles):

GROUP 1 AAA	26.66	7.13
GROUP 1AA	26.16	7.13
GROUP 1A	25.66	7.13
GROUP 1	25.16	7.13
GROUP 2	24.72	7.13
GROUP 3	24.36	7.13
GROUP 4	22.26	7.13

Zone Differential (Add to Zone 1 rates):
Zone 2 (26-45 radius miles) - $ .70
Zone 3 (Over 45 radius miles) - $1.00

BASEPOINTS: Aberdeen, Bellingham, Bremerton, Everett, Kent, Mount Vernon, Port Angeles, Port Townsend, Seattle, Shelton, Wenatchee, Yakima

POWER EQUIPMENT OPERATORS CLASSIFICATIONS

GROUP 1AAA - Cranes-over 300 tons, or 300 ft of boom (including jib with attachments)

GROUP 1AA - Cranes 200 to 300 tons, or 250 ft of boom (including jib with attachments); Tower crane over 175 ft in height, base to boom

GROUP 1A - Cranes, 100 tons thru 199 tons, or 150 ft of boom (including jib with attachments); Crane-overhead, bridge type, 100 tons and over; Tower crane up to 175 ft in height base to boom; Loaders-overhead, 8 yards and over; Shovels, excavator, backhoes-6 yards and over with attachments

GROUP 1 - Cableway; Cranes 45 tons thru 99 tons, under 150 ft of boom (including jib with attachments); Crane-overhead, bridge type, 45 tons thru 99 tons; Derricks on building work; Excavator, shovel, backhoes over 3 yards and under 6 yards; Hard tail end dump articulating off-road equipment 45 yards and over; Loader-overhead 6 yards to, but not including 8 yards; Mucking machine, mole, tunnel, drill and/or shield; Quad 9, HD 41, D-10; Remote control operator on rubber tired earth moving equipment; Rollagon; Scrapers-self propelled 45 yards and over; Slipform pavers; Transporters, all truck or track type

GROUP 2 - Barrier machine (zipper); Batch Plant Operaor-Concrete; Bump Cutter; Cranes, 20 tons thru 44 tons with attachments; Crane-overhead, bridge type-20 tons through 44 tons; Chipper; Concrete Pump-truck mount with boom attachment; Crusher; Deck Engineer/Deck Winches (power); Drilling machine; Excavator, shovel, backhoe-3yards and under; Finishing Machine, Bidwell, Gamaco and similar equipment; Guardrail punch; Horizontal/directional drill operator; Loaders-overhead under 6 yards; Loaders-plant feed; Locomotives-all; Mechanics-all;

Mixers-asphalt plant; Motor patrol graders-finishing; Piledriver (other than crane mount); Roto-mill,roto-grinder; Screedman, spreader, topside operator-Blaw Knox, Cedar Rapids, Jaeger, Caterpillar, Barbar Green; Scraper-self propelled, hard tail end dump, articulating off-road equipment-under 45 yards; Subgrade trimmer; Tractors, backhoes-over 75 hp; Transfer material service machine-shuttle buggy, blaw knox-roadtec; Truck crane oiler/driver-100 tons and over; Truck Mount portable conveyor; Yo Yo Pay dozer

GROUP 3 - Conveyors; Cranes-thru 19 tons with attachments; A-frame crane over 10 tons; Drill oilers-auger type, truck or crane mount; Dozers-D-9 and under; Forklift-3000 lbs. and over with attachments; Horizontal/directional drill locator; Outside hoists-(elevators and manlifts), air tuggers, strato tower bucket elevators; Hydralifts/boom trucks over 10 tons; Loader-elevating type, belt; Motor patrol grader-nonfinishing; Plant oiler-asphalt, crusher; Pumps-concrete; Roller, plant mix or multi-lift materials; Saws-concrete; Scrpers-concrete and carry-all;

Service engineer-equipment; Trenching machines; Truck Crane Oiler/Driver under 100 tons; Tractors, backhoe 75 hp and under

GROUP 4 - Assistant Engineer; Bobcat; Brooms; Compressor; Concrete finish mahine-laser screed; Cranes-A frame-10 tons and under; Elevator and Manlift-permanent or shaft type; Gradechecker, Stakehop; Forklifts under 3000 lbs. with attachments; Hydralifts/boom trucks, 10 tons and under; Oil distributors, blower distribution and mulch seeding operator; Pavement breaker; Posthole digger, mechanical; Power plant; Pumps, water; Rigger and Bellman; Roller-other than plant mix; Wheel Tractors, farmall type; Shotcrete/gunite equipment operator

FOOTNOTE A- Reduced rates may be paid on the following:

1. Projects involving work on structures such as buildings and bridges whose total value is less than $1.5 million excluding mechanical, electrical, and utility portions of the contract.

2. Projects of less than $1 million where no building is involved. Surfacing and paving included, but utilities excluded.

3. Marine projects (docks, wharfs, etc.) less than $150,000.

HANDLING OF HAZARDOUS WASTE MATERIALS: Personnel in all craft classifications subject to working inside a federally designated hazardous perimeter shall be elgible for compensation in accordance with the following group schedule relative to the level of hazardous waste as outlined in the specific hazardous waste project site safety plan.

H-1 Base wage rate when on a hazardous waste site when not outfitted with protective clothing
H-2 Class "C" Suit - Base wage rate plus $ .25 per hour.
H-3 Class "B" Suit - Base wage rate plus $ .50 per hour.
H-4 Class "A" Suit - Base wage rate plus $ .75 per hour.

ENGI0370I 06/01/1998

	Rates	Fringes
CHELAN (EAST OF THE 120TH MERIDIAN) COUNTY		
ZONE 1:		
POWER EQUIPMENT OPERATORS:		
GROUP 1A	19.41	5.40
GROUP 1	19.95	5.40

GROUP 2	20.26	5.40
GROUP 3	20.85	5.40
GROUP 4	21.01	5.40
GROUP 5	21.16	5.40
GROUP 6	21.43	5.40
GROUP 7	21.70	5.40
GROUP 8	22.76	5.40

ZONE DIFFERENTIAL (Add to Zone 1 rate): Zone 2 - $2.00

Zone 1: Within 45 mile radius of Spokane, Moses Lake, Pasco, Washington; Lewiston, Idaho
Zone 2: Outside 45 mile radius of Spokane, Moses Lake, Pasco, Washington; Lewiston, Idaho

POWER EQUIPMENT OPERATORS CLASSIFICATIONS

GROUP 1A: Boat Operator; Crush Feeder; Oiler; Steam Cleaner

GROUP 1: Bit Grinders; Bolt Threading Machine; Compressors (under 2000 CFM, gas, diesel, or electric power); Deck Hand; Drillers Helper (assist driller in making drill rod connections, service drill engine and air compressor, repair drill rig and drill tools; drive drill support truck to and on the job site, remove drill cuttings from around bore hole and inspect drill rig while in operation); Fireman & Heat Tender; Grade Checker; Hydro-seeder, Mulcher, Nozzleman; Oiler Driver, & Cable Tender, Mucking Machine; Pumpman; Rollers, all types on subgrade, including seal and chip coatings (farm type, Case, John Deere & similar, or Compacting Vibrator), except when pulled by Dozer with operable blade; Welding Machine

GROUP 2: A-frame Truck (single drum); Assistant Refrigeration Plant (under 1000 ton); Assistant Plant Operator, Fireman or Pugmixer (asphalt); Bagley or Stationary Scraper; Belt Finishing Machine; Blower Operator (cement); Cement Hog; Compressor (2000 CFM or over, 2 or more, gas diesel or electric power); Concrete Saw (multiple cut); Distributor Leverman; Ditch Witch or similar; Elevator Hoisting Materials; Dope Pots (power agitated); Fork Lift or Lumber Stacker, hydra-lift & similar; Gin Trucks (pipeline); Hoist, single drum; Loaders (bucket elevators and conveyors); Longitudinal Float; Mixer (portable-concrete); Pavement Breaker, Hydra-Hammer & similar; Power Broom; Railroad Ballast Regulation Operator (self-propelled); Railroad Power

Tamper Operator (self-propelled); Railroad Tamper Jack Operator (self-propelled; Spray Curing Machine (concrete); Spreader Box (self-propelled); Straddle Buggy (Ross & similar on construction job only); Tractor (Farm type R/T with attachment, except

Backhoe); Tugger Operator

GROUP 3: A-frame Truck (2 or more drums); Assistant Refrigeration Plant & Chiller Operator (over 1000 ton); Backfillers (Cleveland & similar); Batch Plant & Wet Mix Operator, single unit (concrete); Belt-Crete Conveyors with power pack or similar; Belt Loader (Kocal or similar); Bending Machine; Bob Cat; Boring Machine (earth); Boring Machine (rock under 8" bit) (Quarry Master, Joy or similar); Bump Cutter (Wayne, Saginau or similar); Canal Lining Machine (concrete); Chipper (without crane); Cleaning & Doping Machine (pipeline); Deck Engineer; Elevating Belt-type Loader (Euclid, Barber Green & similar); Elevating Grader-type Loader (Dumor, Adams or similar); Generator Plant Engineers (diesel or electric); Gunnite Combination Mixer & Compressor; Locomotive Engineer; Mixermobile; Mucking Machine; Posthole Auger or Punch; Pump (grout or jet); Soil Stabilizer (P & H or similar); Spreader Machine; Tractor (to D-6 or equivalent) and Traxcavator; Traverse Finish Machine; Turnhead Operator

GROUP 4: Concrete Pumps (squeeze-crete, flow-crete, pump-crete, Whitman & similar); Curb Extruder (asphalt or concrete); Drills (churn, core, calyx or diamond)(Operate drilling machine, drive or transport drill rig to and on job site and weld well casing); Equipment Serviceman, Greaser & Oiler; Hoist (2 or more drums or Tower Hoist); Loaders (overhead & front-end, under 4 yds. R/T); Refrigeration Plant Engineer (under 1000 ton); Rubber-tired Skidders (R/T with or without attachments); Surface Heater & Planer Machine; Trenching Machines (under 7 ft. depth capacity); Turnhead (with re-screening); Vacuum Drill (reverse circulation drill under 8" bit)

GROUP 5: Backhoe (under 45,000 gw); Backhoe and Hoe Ram (under 3/4 yd.); Carrydeck & boom truck (under 25 tons); Cranes (25 tons & under),all attachments including clamshell, dragline); Derricks & Stifflegs (under 65 tons); Drilling Equipment (8" bit & over) (Robbins, reverse circulation & similar)(operates drill machine, drive or transport drill rig to and on job site and weld well casing); Hoe Ram; Piledriving Engineers; Paving (dual drum); Railroad Track Liner Operator(self-propelled); Refrigeration Plant Engineer (1000 tons & over); Signalman (Whirleys, Highline Hammerheads or similar)

GROUP 6: Asphalt Plant Operator; Automatic Subgrader (Ditches & Trimmers) (Autograde, ABC, R.A. Hansen & similar on grade wire); Backhoe (45,000 gw and over to 110,000 gw); Backhoes & Hoe Ram (3/4 yd. to 3 yd.); Batch Plant (over 4 units); Batch & Wet Mix Operator (multiple units, 2 & incl. 4); Blade Operator (Motor Patrol & Attachments, Athey & Huber); Boom Cats (side); Cableway Controller (dispatcher); Clamshell Operator (under 3 yds.); Compactor (self-propelled with blade); Concrete Pump Boom Truck; Concrete Slip Form Paver; Cranes (over 25 tons including 45 tons), all attachments including clamshell, dragline; Crusher,

Grizzle & Screening Plant Operator; Dozer, 834 R/T & similar; Draglines (under 3 yds.); Drill Doctor; H.D.Mechanic; H.D. Welder; Loader Operator (front-end & overhead, 4 yds. incl. 8 yds.), Multiple Dozer Units with single blade; Paving Machine (asphalt and concrete); Quad-Track or similar equipment; Rollerman (finishing asphalt pavement); Roto Mill (pavement grinder); Scrapers, all rubber-tired; Screed Operator; Shovel (under 3 yds.); Tractors (D-6 & equilvalent & over); Trenching Machines (7 ft. depth & over); Tug Boat Operator; Vactor Guzzler, super sucker

GROUP 7: Backhoe (over 110,000 gw); Backhoes & Hoe Ram (3 yds. & over); Blade (finish & bluetop), Automatic, CMI, ABC, Finish Athey & Huber & similar when used as automatic; Cableway Operators; Clamshell Operator (3 yds. & over); Cranes (over 45 tons to but not including 85 tons), all attachments including clamshell and dragline; Derricks & Stifflegs (65 tons & over); Draglines (3 yds. & over); Elevating Belt (Holland type); Heavy Equipment Robotics Operator; Loader (360 degrees revolving Koehring Scooper or similar); Loaders (overhead & front-end, over 8 yds. to 10 yds.); Rubber-tired Scrapers (multiple engine with three or more scrapers); Shovels (3 yds. & over); Ultra High Pressure Wateriet Cutting Tool System Operator (30,000 psi); Vacuum Blasting Machine Operator; Whirleys & Hammerheads, ALL

GROUP 8: Cranes (85 tons and over, and all climbing, overhead, rail and tower); Loaders (overhead and front-end, 10 yards and over); Helicopter Pilot

BOOM PAY: (All Cranes, Including Tower)

180' to 250'	$.30 over scale
Over 250'	$.60 over scale

NOTE: In computing the length of the boom on Tower Cranes, they shall be measured from the base of the tower to the point of the boom.

HAZMAT: Anyone working on HAZMAT jobs, working with supplied air shall receive $1.00 an hour above classification.

ENGI0612B 06/01/1998

	Rates	Fringes
LEWIS, PIERCE, PACIFIC (portion lying north of a parallel line extending west from the northern boundary of Wahkaikum County to the sea) AND THURSTON COUNTIES		

ON PROJECTS DESCRIBED IN FOOTNOTE A BELOW, THE RATE FOR EACH

GROUP SHALL BE 90% OF THE BASE RATE PLUS FULL FRINGE BENEFITS.
ON ALL OTHER WORK, THE FOLLOWING RATES APPLY.

POWER EQUIPMENT OPERATORS:
Zone 1 (0-25 radius miles):

GROUP 1AAA	26.66	7.13
GROUP 1AA	26.16	7.13
GROUP 1A	25.66	7.13
GROUP 1	25.16	7.13
GROUP 2	24.72	7.13
GROUP 3	24.36	7.13
GROUP 4	22.26	7.13

Zone Differential (Add to Zone 1 rates):
Zone 2 (26-45 radius miles) = $ .70
Zone 3 (Over 45 radius miles) - $1.00

BASEPOINTS: CENTRALIA, OLYMPIA, TACOMA

POWER EQUIPMENT OPERATORS CLASSIFICATIONS

GROUP 1 AAA - Cranes-over 300 tons or 300 ft of boom (including jib with attachments)

GROUP 1AA - Cranes- 200 tonsto 300 tons, or 250 ft of boom (including jib with attachments; Tower crane over 175 ft in height, bas to boom

GROUP 1A - Cranes, 100 tons thru 199 tons, or 150 ft of boom (including jib with attachments); Crane-overhead, bridge type, 100 tons and over; Tower crane up to 175 ft in height base to boom; Loaders-overhead, 8 yards and over; Shovels, excavator, backhoes-6 yards and over with attachments

GROUP 1 - Cableway; Cranes 45 tons thru 99 tons under 150 ft of boom (including jib with attachments); Crane-overhead, bridge type, 45 tons thru 99 tons; Derricks on building work; Excavator, shovel, backhoes over 3 yards and under 6 yards; Hard tail end dump articulating off-road equipment 45 yards and over; Loader-overhead, 6 yards to, but not including, 8 yards; Mucking machine, mole, tunnel, drill and/or shield; Quad 9 HD 41, D-10; Remote control operator on rubber tired earth moving equipment; Rollagon; Scrapers-self-propelled 45 yards and over; Slipform pavers; Transporters, all track or truck type

GROUP 2 - Barrier machine (zipper); Batch Plant Operator-

concrete; Bump Cutter; Cranes, 20 tons thru 44 tons with attachments; Crane-Overhead, bridge type, 20 tons through 44 tons; Chipper; Concrete pump-truck mount with boom attachment; Crusher; Deck engineer/deck winches (power); Drilling machine; Excavator, shovel, backhoe-3 yards and under; Finishing machine, Bidwell, Gamaco and similar equipment; Guardrail punch; Loaders, overhead under 6 yards; Loaders-plant feed; Locomotives-all; Mechanics- all; Mixers, asphalt plant; Motor patrol graders, finishing; Piledriver (other than crane mount); Roto-mill, roto-grinder; Screedman, spreader, topside operator-Blaw Knox, Cedar Rapids, Jaeger, Caterpillar, Barbar Green; Scraper-self-propelled, hard tail end dump, articulating off-road equipment-under 45 yards; Subgrader trimmer; Tractors, backhoe over 75 hp; Transfer material service machine-shuttle buggy, Blaw Knox-Roadtec; Truck Crane oiler/driver-100 tons and over; Truck Mount Portable Conveyor; Yo Yo pay

GROUP 3 - Conveyors; Cranes through 19 tons with attachments; Crane-A-frame over 10 tons; Drill oilers-auger type, truck or crane mount; Dozer-D-9 and under; Forklift-3000 lbs. and over with attachments; Horizontal/directional drill locator; Outside Hoists-(elevators and manlifts), air tuggers, strato tower bucket elevators; Hydralifts/boom trucks over 10 tons; Loaders-elevating type, belt; Motor patrol grader-nonfinishing; Plant oiler-asphalt, crusher; Pump-Concrete; Roller, plant mix or multi-lfit materials; Saws-concrete; Scrapers, concrete and carry all; Service engineers-equipment; Trenching machines; Truck crane oiler/driver under 100 tons; Tractors, backhoe under 75 hp

GROUP 4 - Assistant Engineer; Bobcat; Brooms; Compressor; Concrete Finish Machine-laser screed; Cranes A-frame 10 tons and under; Elevator and manlift (permanent and shaft type); Forklifts-under 3000 lbs. with attachments; Gradechecker, stakehop; Hydralifts/boom trucks, 10 tons and under; Oil distributors, blower distribution and mulch seeding operator; Pavement breaker; Posthole digger-mechanical; Power plant; Pumps-water; Rigger and Bellman; Roller-other than plant mix; Wheel Tractors, farmall type; Shotcrete/gunite equipment operator

FOOTNOTE A- Reduced rates may be paid on the following:

1. Projects involving work on structures such as buildings and bridges whose total value is less than $1.5 million excluding mechanical, electrical, and utility portions of the contract.

2. Projects of less than $1 million where no building is involved. Surfacing and paving included, but utilities excluded.

3. Marine projects (docks, wharfs, etc.) less than $150,000.

HANDLING OF HAZARDOUS WASTE MATERIALS: Personnel in all craft classifications subject to working inside a federally designated hazardous perimeter shall be elgible for compensation in accordance with the following group schedule relative to the level of hazardous waste as outlined in the specific hazardous waste project site safety plan.

H-1 Base wage rate when on a hazardous waste site when not outfitted with protective clothing
H-2 Class "C" Suit - Base wage rate plus $ .25 per hour.
H-3 Class "B" Suit - Base wage rate plus $ .50 per hour.
H-4 Class "A" Suit - Base wage rate plus $ .75 per hour.

---

* ENGI0701H 01/01/1999

	Rates	Fringes
CLARK, COWLITZ, KLICKITAT, PACIFIC (SOUTH), SKAMANIA, AND WAHKIAKUM COUNTIES		
POWER EQUIPMENT OPERATORS (See Footnote A)		
ZONE 1:		
GROUP 1	25.91	8.20
GROUP 2	25.00	8.20
GROUP 3	24.30	8.20
GROUP 4	23.83	8.20
GROUP 5	23.27	8.20
GROUP 6	21.10	8.20

Zone Differential (add to Zone 1 rates):
Zone 2 - $1.50
Zone 3 - 3.00

For the following metropolitan counties: MULTNOMAH; CLACKAMAS; MARION; WASHINGTON; YAMHILL; AND COLUMBIA; CLARK AND COWLITZ COUNTY, WASHINGTON WITH MODIFICATIONS AS INDICATED:

All jobs or projects located in Multnomah, Clackamas and Marion counties, West of the western boundary of Mt. Hood National Forest and West of Mile Post 30 ON Interstate 84 and West of Mile Post 30 on State Highway 26 and West of Mile Post 30 on Highway 22 and all jobs located in Yamhill County, Washington County and Columbia County and all jobs or projects located in Clark and Cowlitz Counties, Washington except that portion of Cowlitz County in the Mt. St. Helens "Blast Zone" shall receive Zone I pay for all classifications.

All jobs or projects located in the area outside the identified boundary above, but less than 50 miles from the Portland City Hall shall receive Zone II pay for all classifications.

All jobs or projects located more than 50 miles from the Portland City Hall, but outside the identified border above, shall receive Zone III pay for all classifications.

For the following cities: ALBANY; COOS, BAY; EUGENE; GRANTS PASS; KLAMATH FALLS; MEDFORD; ROSEBURG

All jobs or projects located within 30 miles of the respective city hall of the above mentioned cities shall receive Zone I pay for all classifications.

All jobs of projects located more than 30 miles ans less than 50 miles from the respective city hall of the above mentioned cities shall receive Zone II pay for all classifications.

All jobs of projects located more than 50 miles from the respective city hall of the above mentioned cities shall receive Zone III pay for all classifications.

POWER EQUIPMENT OPERATORS CLASSIFICATIONS

GROUP 1: CONCRETE: Batch Plant and/or Wet Mix Operator, three units or more; CRANE: Crane Operator, over 200 tons; Whirley Operator 90 tons and over; Helicopter Operators, when used in erecting work; Floating Crane, 150 tons but less than 250 tons; Lattice Boom Crane - 200 tons and over, Boom 201' through 280'; FLOATING EQUIPMENT: Floating Crane, 250 tons and over

GROUP 2: ASPHALT: Asphalt Plant Operator (any type); Roto-mill, pavement profiler, operator, six foot lateral cut and over; BLADE: Auto Grader or "Trimmer" Operator (Grade Checker required); BULLDOZERS: Tandem bulldozer operator, quad-nine and similar type; D-11; Tandem Bulldozer Operator, Quad-nine and similar type; CONCRETE: Batch Plant and/or Wet Mix Operator, one and two drum; Automatic Concrete Slip Form Paver Operator; Concrete Canal Line Operator; Concrete Profiler, Diamond Head; CRANE: Cableway Operator, 25 tons and over; Crane Operator, over 40 tons and including 100 tons; Crane Operator, over 100 tons and including 200; Tower Crane Operator, over 80 tons and including 150 tons; Whirley Operator - under 90 tons; Lattice Boom Crane - 90 through 199 tons, Boom = 150' through 200'; CRUSHER: Crusher Plant Operator; FLOATING QUIPMENT: Floating Clamshell, etc. Operator, 3cu. yds. and over; Floating Crane (derrick barge) Operator, 30 tons but less than 80 tons; Floating Crane (derrick barge) Operator, 80 ton but less than 150 ton; LOADERS: Loader Operator, 6 cu. yds. but less than 12 cu. yds.; Loader Operator, 12 cu. yds. and over; REMOTE CONTROL: Remote controlled earth-moving equipment (no one operator shall operate more than two pieces of earth-moving equipment at one time); RUBBER-TIRED

SCRAPERS: Rubber-tired Scraper Operator, with tandem scrapers, multi-engine; SHOVEL, DRAGLINE, CLAMSHELL, BACKHOE, SKOOPER, OPERATOR: Shovel, etc., 3 cu. yds., but less than 5 cu. yds.; Shovel, etc., 5 cu. yds. and over; TRENCH MACHINE: Wheel Excavator, under 750 cu. yds. per hour (Grade Oiler required); Canal Trimmer (Grade Oiler required); Wheel Excavator, over 750 cu. yds. per hour (two Operators and at least one Grade Oiler required); Band Wagon (in conjunction with wheel excavator); UNDERWATER EQUIPMENT: Underwater Equipment Operator, remote or otherwise, when used in construction work.

GROUP 3: CRANES: Lattice Boom Crane - 50 through 89 tons; FORKLIFT: Rock Hound Operator; LOADERS: Loader Operator, 4 cu. yds. but less than 6 cu. yds.; Rubber-tired RUBBER-TIRED SCRAPERS: Scraper Operator, with tandem scrapers; Self-loading, paddle wheel, auger type, finish and/or 2 or more units

GROUP 4: ASPHALT: Screed Operator; Asphalt Paver Operator (Screed man required); Diesel-Electric engineer, Plant; Roto-Mill, pavement profiler, operator, under six foot lateral cut; BLADE: Blade Operator, externally controlled by electronic, mechanical hydraulic means; Blade operator, multi-engine; BULLDOZERS: Bulldozer Operator; Drill Cat Operator; Side-boom Operator; Bulldozer Operator, twin engine (TC 12 and similar type, D-10); Cable-Plow Operator (any type); CLEARING: Log Skidders; Chippers; Incinerator; Stump Splitter (loader mounted or similar type); Compactor Operator, with blade; Compactor Operator, multi-engine; CONCRETE: Mixer Mobile Operator; Screed Operator; Concrete Cooling Machine Operator; Concrete Paving Road Mixer; Concrete Breaker; Reinforced Tank Banding Machine (K-17 or similar types); CRANE: Chicago boom and similar types; Lift Slab Machine Operator; Boom type lifting device, 5 ton capacity or less; Cherry Picker or similar type crane-hoist, 5 ton capacity or less; Crane Operator, under 25 ton (except for rough terrain),

Hoist Operator, two drum; Hoist Operator, three or more drums; Derrick Operator, under 100 ton; Hoist Operator, stiff leg, guy derrick or similar type, 50 ton and over; Cableway Operator, up to twenty-five ton; Crane Operator, over twenty-five ton and including forty ton; Bridge Crane Operator; Locomotive, Gantry, Overhead; Lattice Boom Crane - 25 through 49 tons; CRUSHER: Generator Operator; Diesel-Electric Engineer; Grizzley Operator; DRILLING: Drill Doctor; Boring Machine Operator; Driller-Percussion, Diamond, Core, Cable, Rotary and similar type; Cat Drill (John Henry); FLOATING EQUIPMENT: Diesel-electric Engineer; Jack Operator, elevating barges, Barge Operator, self-unloading; Piledriver Operator (not crane type) (Deckhand required); Floating Clamshelll, etc. Operator, under 3 cu. yds. (Fireman or Diesel-Electric Engineer required); Floating Crane (derrick barge) Operator, less than 30 tons; GENERATORS: Generator Operator; Diesel-electric Engineer required); GUARDRAIL EQUIPMENT: Guardrail Punch Operator (all types); Guardrail auger Operator (all types); Combination Guardrail machines, i.e. punch, auger, etc.; HEATING PLANT: Surface Heater and Planer Operator;

HYDRAULIC HOES: Hydraulic Backhoe Operator, Track Type 3/8 cu. yd. takes shovel Classif. rate); LOADERS: Belt Loaders, Kolman and Ko Cal types; Loaders Operator, front end and overhead, 2-1/2 cu. yds. and under 4 cu. yds.; Elevating Loader Operator, Athey and asimilar types; Elevating Grader Operator, operated by Tractor Operator, sierra, Euclid or similar types; PILEDRIVERS: Hammer Operator; Piledriver Operator (not crane type); Pipe Cleaning Machine Operator; Pipe Doping Machine Operator; PIPELINE, SEWER WATER: Pipe Bending Machine Operator; Pipe Wrapping Machine Operator; Boring Machine Operator; Back Filling Machine Operator; REPAIRMEN, HEAVY DUTY: Diesel-Electric Engineer (Plant or Floating); Bolt Treading Machine Operator; Drill Doctor (bit grinder); H.D. Mechanic; H.D. Welder; Machine Tool Operator; Combination H.D. Mechanic-Welder, when dispatched and/or when required to do both; Welder-Certified, when dispatched and/or required; RUBBER-TIRED SCRAPERS: Rubber-tired Scraper Operator, single engine, single scraper; Self-loading, paddle wheel, auger type under 15 cu. yds.; rubber-tired Scraper Operator, twin engine; Rubber-tired Scraper Operator, with push-pull attachments; Self-loading, paddle wheel, auger type 15 cu. yds. and over, single engine; SHOVEL, DRAGLINE, CLAMSHELL, BACKHOE, SKOOPER OPERATOR: Diesel-Electric Engineer; Stationary Drag Scraper Operator; Shovel, Dragline, Clamshell, Hoe, etc., Operator, under 1 cu. yd.; Shovel, etc., 1 cu. yd. and less than 3 cu. yds.; Grade-all Operator, under 1 cu. yd.; Grade-all 1 cu. yd. and over; SURFACING (BASE) MATERIALS: Blade Mounted Spreaders, Ulrich and similar types; TRACTOR-RUBBER TIRED: Tractor Operator, rubber-tired, over 50 H.P. Flywheel; Tractor Operator, with boom attachment; Rubber-tired Dozers and Pushers (Michigan, Cat, Hough type); TRENCHING MACHINE: Trenching Machine Operator, maximum digging capacity over 3 ft. depth (Grade Oiler required); Back Filling Machine Operator; TUNNEL: Mucking Machine Operator; Shield Operator; Boring Machine Operator

GROUP 5: ASPHALT: Extrusion Machine Operator; Roller Operator (any asphalt mix); Asphalt Burner and reconditioner Operator (any

type), 84; roto-mill, Pavement Profiler, ground man.; COMPRESSORS: Compressor Operator any power), over 1,250 cu. ft. total capacity; COMPACTORS: Compactor Operator, including vibratory; Wagner Pactor Operator or similar type (without blade); CONCRETE: Combination mixer and Compressor Operator, gunite work; Concrete Batch Plant Quality Control Operator; Beltcrete Operator; Pumpcrete Operator (any type) Pavement Grinder and/or Grooving Machine Operator (riding type); Cement Pump Operator, Fuller-Kenyon and similar; Concrete Pump Operator; Grouting Machine Operator; Concrete Mixer Operator, single drum, under five bag capacity and over; Cast place pipe laying machine; Maginnis Internal Full Slab Vibrator Operator; Concrete Finishing machine Operator, Clary, Johnson, Bidwell, Burgess bridge deck or similar type; Curb Machine Operator, mechanical Berm, Curb and/or Curb and Gutter; Concrete Joint Machine Operator; Concrete Planer Operator; Tower Mobile Operator; Power Jumbo Operator setting slip forms; Concrete Paving Machine Operator; Concrete Finishing

Machine Operator; Concrete Spreader Operator; CRANE: Helicopter Hoist Operator; Hoist Operator, single drum; Elevator Operator; A-frame Truck Operator, Double drum; Boom Truck Operator Hydraulic Boom Truck, Pittman; DRILLING: Churn Drill and earth Boring Machine Operator; FLOATING EQUIPMENT: Fireman; FORKLIFT: Lull Hi-Lift Operator or similar type; Fork Lift, over 5 ton; HYDRAULIC HOES: Hydraulic Backhoe Operator, wheel type 3/8 cu. yd and under with or without front end attachment 2-1/2 cu. yds. and under (Ford, John Deere, Case, Type); LOADERS: Loaders, rubber-tired type, 2-1/2 cu. yds. and under; Elevating Grader Operator, Tractor Towed requiring Operator or Grader; OILERS: Service Oiler (Greaser); PIPELINE, SEWER WATER: Hydra Hammer or similar types; Pavement Breaker Operator; RAILROAD EQUIPMENT: Locomotive Operator, under 40 tons; Ballast Regulator Operator; Ballast Tamper Multi-Purpose Operator; Track Liner Operator; Tie Spacer Operator; Shuttle Car Operator; Locomotive Operator, 40 tons and over; SURFACING (BASE) MATERIAL: Roller Operator, Oiling, C.T.B.; Rock Spreaders self-propelled; Pulva-mixer or similar types; Chip Spreading Machine Operator Lime Spreading Operator, construction job site; SWEEPERS: Sweeper Operator (Wayne Tractor Operator, rubber-tired, 50 H.P. Flywheel and under; TRENCHING: Trench Machine Operator, maximum digging capacity 3 ft. depth

GROUP 6: ASPHALT: Plant Oiler; Plant Fireman; Pugmill Operator (any type); Truck mounted asphalt spreader, with screed; BLADE: Blade Operator, pulled type; COMPRESSORS: Compressor Operator (any power), under 1,250 cu. ft. total capacity; CONCRETE: Plant Oiler, Assistant Conveyor Operator; Conveyor Operator; Mixer Box Operator (C.T.B., dry batch, etc.); Cement Hog Operator; Concrete Saw Operator; Concrete Curing Machine Operator (riding type); Wire Mat or Brooming Machine Operator; CRANE: Oiler; Truck Crane Oiler-Driver, 25 tons capacity or over; Fireman, all equipment; A-frame Truck Operator, single drum; Tugger or Coffin Type Hoist Operator; CRUSHER: Crusher Oiler; Crusher Feederman; DRILLING: Drill Tender; Auger Oiler; FLOATING EQUIPMENT: Deckhand; Boatman; FORKLIFT: Self-propelled Scaffolding Operator, construction job site (excluding working platform); Fork Lift or Lumber Stacker Operator, construction job site; GUARDRAIL EQUIPMENT: Oiler,

auger Oiler; Oiler, combination guardrail machines; Guardrail Punch Oiler; HEATING PLANT: Temporary Heating Plant Operator; LOADERS: Bucket Elevator Loader Operator, Barber-Greene and similar types; Bobcat, Skid Steer - Under 1 yd; OILERS: Oiler; Guardrail Punch Oiler; Truck Crane Oiler-Driver, 25 ton or over; Auger Oiler; Grade Oiler, required to check grade; Grade Checker; Tar Pot Fireman; PIPELINE SEWER WATER: Tar Pot Fireman (power agitated); Hydraulic Pipe Press Operator; PUMPS: Pump Operator, under 4"; Pump Operator (any power), 4" and over; Hydrostatic Pump Operator; RAILROAD EQUIPMENT: Brakeman; Oiler; Switchman; Motorman; Ballast Jack Tamper Operator; REPAIRMAN HEAVY DUTY: Parts Man (Tool Room); SHOVEL, DRAGLINE, CLAMSHELL, BACKHOE, SKOOPER OPERATORS: Oiler; Grade Oiler (required to check grade); Grade Checker; Fireman; Signalman; Bell Boy, phones, etc., Operator; Helicopter Radioman (ground); SURFACING (BASE)

MATERIAL: Roller Operator, grading of base rock (not asphalt); Tamping Machine Operator, mechanical, self-propelled; Hydrographic Seeder Machine Operator, staw, pulp or seed; SWEEPERS: Broom Operator, self-propelled, construction job site; TRENCHING: Oiler; Grade Oiler (required to check grade); TUNNEL: Conveyor Operator (any type); air Filtration Equipment Operator; Motormen (dinkey); Oiler; WELDING MACHINES: Welding Machine Operator

FOOTNOTE A: HANDLING OF HAZARDOUS WASTE MATERIALS: Personnel in all craft classifications subject to working inside a federally designated hazardous perimeter shall be eligible for compensation in accordance with the following group schedule relative to the level of hazardous waste as outline in the specific hazardous waste project site safety plan.

H-1 Base wage rate when on a hazardous waste site when not outfitted with protective clothing.
H-2 Class "C" Suit - Basic hourly wage rate plus $1.00 per hour, fringes plus $0.15.
H-3 Class "B" Suit - Basic hourly wage rate plus $1.50 per hour, fringes plus $0.15.
H-4 Class "A" Suit - Basic hourly wage rate plus $2.00 per hour, fringes plus $0.15.

IRON0086A 07/01/1998

	Rates	Fringes
IRONWORKERS	22.90	10.17

LABO0001I 06/01/1998

	Rates	Fringes
CHELAN AND KITTITAS COUNTIES		
LABORERS:		
ZONE 1:		
GROUP 1	13.44	5.19
GROUP 2	15.76	5.19
GROUP 3	17.48	5.19
GROUP 4	17.96	5.19
GROUP 5	18.32	5.19

ZONE DIFFERENTIAL (ADD TO ZONE 1 RATES):
ZONE 2 - $ .70
ZONE 3 - $1.00

BASE POINTS: CHELAN, SUNNYSIDE, WENATCHEE, AND YAKIMA

ZONE 1 - Projects within 25 radius miles of the respective city

hall
ZONE 2 - More than 25 but less than 45 radius miles from the respective city hall
ZONE 3 - More than 45 radius miles from the respective city hall

CALLAM, GRAYS HARBOR, JEFFERSON, KING, KITSAP, LEWIS, MASON, PACIFIC (North of a straight line made by extending the north boundary of Wahkiakum County west to the Pacific Ocean), PIERCE, SNOHOMISH AND THURSTON COUNTIES

LABORERS:
ZONE 1:

GROUP 1	14.36	5.19
GROUP 2	16.68	5.19
GROUP 3	21.36	5.19
GROUP 4	21.84	5.19
GROUP 5	22.20	5.19

ZONE DIFFERENTIAL (ADD TO ZONE 1 RATES):
ZONE 2 - $ .70
ZONE 3 - $1.00

BASE POINTS: BELLINGHAM, MT. VERNON, EVERETT, SEATTLE, KENT, TACOMA, OLYMPIA, CENTRALIA, ABERDEEN, SHELTON, PT. TOWNSEND, PT. ANGELES, AND BREMERTON

ZONE 1 - Projects within 25 radius miles of the respective city hall
ZONE 2 - More than 25 but less than 45 radius miles from the respective city hall
ZONE 3 - More than 45 radius miles from the respective city hall

LABORERS CLASSIFICATIONS

GROUP 1: Landscaping and Planting; Watchman; Window Washer/Cleaner (detail clean-up, such as but not limited to cleaning floors, ceilings, walls, windows, etc., prior to final acceptance by the owner)
GROUP 2: Batch Weighman; Crusher Feeder; Fence Laborer; Flagman; Pilot Car

GROUP 3: General Laborer; Air, Gas, or Electric Vibrating Screed; Asbestos Abatement Laborer; Ballast Regulator Machine; Brush Cutter; Brush Hog Feeder; Burner; Carpenter Tender; Cement

Finisher Tender; Change House or Dry Shack; Chipping Gun (under 30 lbs.); Choker Setter; Chuck Tender; Clean-up Laborer; Concrete

Form Stripper; Curing Laborer; Demolition (wrecking and moving including charred material); Ditch Digger; Dump Person; Fine Graders; Firewatch; Form Setter; Gabian Basket Builders; Grout Machine Tender; Grinders; Guardrail Erector; Hazardous Waste Worker (Level C); Maintenance Person; Material Yard Person; Pot Tender; Rip Rap Person; Riggers; Scale Person; Sloper Sprayer; Signal Person; Stock Piler; Stake Hopper; Toolroom Man (at job site); Topper-Tailer; Track Laborer; Truck Spotter; Vinyl Seamer

GROUP 4: Cement Dumper-Paving; Chipping Gun (over 30 lbs.); Clary Power Spreader; Concrete Dumper/Chute Operator; Concrete Saw Operator; Drill Operator (hydraulic, diamond, aiartrac); Faller and Bucker Chain Saw; Grade Checker and Transit Person; Groutmen (pressure) including post tension beams; Hazardous Waste Worker (Level B); High Scaler; Jackhammer; Laserbeam Operator; Manhole Builder-Mudman; Mortarman and Hodcarrier; Nozzleman (concrete pump, green cutter when using combination of high pressure air and water on concrete and rock, sandblast, gunite, shotcrete, water blaster, vacuum blaster); Pavement Breaker; Pipe Layer and Caulker; Pipe Pot Tender; Pipe Reliner (not insert type); Pipe Wrapper; Power Jacks; Railroad Spike Puller-Power; Raker-Asphalt; Rivet Buster; Rodder; Sloper (over 20'); Spreader (concrete); Tamper and Similar electric, air and glas operated tool; Timber Person-sewer (lagger shorer and cribber); Track Liner Power; Tugger Operator; Vibrator; Well Point Laborer

GROUP 5: Caisson Worker; Miner; Powderman; Re-Timberman; Hazardous Waste Worker (Level A).

LABO0238I 06/01/1998

	Rates	Fringes
CHELAN COUNTY		
HOD CARRIERS	19.71	4.39

LABO0335C 06/01/1998

	Rates	Fringes
PACIFIC (South of a straight line made by extending the north boundary line of Wahkiakum County west to the Pacific Ocean) COUNTY		
ZONE 1:		
LABORERS:		
GROUP 1	20.47	6.14
GROUP 2	20.87	6.14
GROUP 3	21.21	6.14
GROUP 4	21.49	6.14
GROUP 5	18.73	6.14
GROUP 6	16.63	6.14

GROUP 7 14.18 6.14

LABORERS CLASSIFICATIONS

GROUP 1: Asphalt Plant Laborers; Asphalt Spreaders; Batch Weighman; Broomers; Brush Burners and Cutters; Car and Truck Loaders; Carpenter Tender; Change-House Man or Dry Shack Man; Choker Setter; Clean-up Laborers; Curing-concrete; Demolition, Wrecking, and Moving Laborers; Dumpers, road oiling crew; Dumpmen (for grading crew); Elevator Feeders; Guard Rail, Median Rail, Reference Post, Guide Post, Right-of-way Marker; Fine Graders; Fire Watch; Form Strippers (not swinging stages); General Laborers; Hazardous Waste Worker; Leverman or Aggregate Spreader (Flaherty and similar types); Loading Spotters; Material Yard Man (including electrical); Pittsburgh Chipper Operator or similar types; Railroad Track Laborers; Ribbon Setters (including steel forms); Rip Rap Man (hand placed); Road Pump Tender; Sewer Laborer; Signalman; Skipman; Slopers; Spraymen; Stake Chaser; Stockpiler; Tie Back Shoring; Timber Faller and Bucker (hand labor); Toolroom Man (at job site); Tunnel Bullgang (above ground); Weight-Man-Crusher (aggregate when used)

GROUP 2: Applicator (including pot power tender for same), applying protective material by hand or nozzle on utility lines or storage tanks on project; Brush (power saw); Burners; Choker Splicer; Clary Power Spreader and similar types; Clean up-nozzleman-Green cutter (concrete, rock, etc.); Concrete Laborer; Concrete Power Buggyman; Crusher Feeder; Demolition and Wrecking Charred Materials; Gunite Nozzleman Tender; Gunite or Sand Blasting Pot Tender; Handlers or Mixers of all Materials of an irritating nature (including cement and lime); Pipe Doping & Wrapping; Tool Operators (includes but not limited to: Dry pack machine, Jackhammer, Chipping guns, Paving breakers); Post Hole Digger, air, gas or electric; Vibrating Screed; Tampers; Sand Blasting (wet); Stake-Setter; Tunnel-Muckers, Brakemen, Concrete Crew, Bull gang (Underground)

GROUP 3: Asbestos Removal (structural removal only); Bit Grinder; Drill Doctor; Drill Operators, air tracks cat drills, wagon drills, rubber-mounted drills, and other similar types; Concrete Saw Operator; Gunite Nozzleman; High scalers, strippers and drillers (covers work in swinging stages, chairs or belts, under extreme conditions unusual to normal drilling, blasting, barring-down, or sloping and stripping); Manhole Builder; Powdermen; Power Saw Operators (Bucking and Falling); Pumpcrete Nozzlemen; Sand Blasting (dry); Sewer Timberman; Track Liners; Anchor Machines; Ballast Regulators; Multiple Tampers; Power Jacks; Tugger Operator; Tunnel-Chuck Tenders, Nippers and Timbermen; Vibrator; Water Blaster

GROUP 4: Asphalt Raker; Concrete Saw Operator (walls); Concrete Nozzelman; Grade Checker; Pipelayer; Laser Beam (Tunnel) applicable when assigned to move, set up, align laser beam; Miner-Tunnel; Motorman-dinky Locomotive-Tunnel; Powderman-Tunnel; Shield Operator-Tunnel

GROUP 5: Traffic Flaggers

GROUP 6: Fence Builders

GROUP 7: Landscaping and Planting Laborers

ZONE DIFFERENTIAL (ADD TO ZONE 1 RATES):

ZONE 2 - $0.65
ZONE 3 - 1.15
ZONE 4 - 1.70
ZONE 5 - 2.75

ZONE DEFINITIONS

BASE POINTS: GOLDENDALE, LONGVIEW, AND VANCOUVER

ZONE 1: Projects within 30 miles of the respective city halL
ZONE 2: More than 30 miles but less than 40 miles from the respective city hall.
ZONE 3: More than 40 miles but less than 50 miles from the respective city hall.
ZONE 4: More than 50 miles but less than 80 miles from the respective city hall.
ZONE 5: More than 80 miles from the respective city hall.

PAIN0005A 03/01/1998

	Rates	Fringes
CLALLAM, GRAYS HARBOR, JEFFERSON, KING, KITSAP, LEWIS, MASON, PACIFIC, PIERCE, SNOHOMISH AND THURSTON COUNTIES		
PAINTERS	21.11	3.52

PAIN0005C 06/10/1996

	Rates	Fringes
CLALLAM, GRAYS HARBOR, JEFFERSON, KING, KITSAP, LEWIS, MASON, PIERCE, SNOHOMISH AND THURSTON COUNTIES		

DRYWALL FINSIHERS	23.00	5.71

PAIN0054A 07/01/1998

	Rates	Fringes
CHELAN AND KITTITAS COUNTIES		
PAINTERS:		
BRUSH, PAPERHANGER, STEAM-CLEANING, STRIPING and SPRAY	18.80	3.67
TV, RADIO, ELECTRICAL TRANSMISSION TOWERS	20.39	3.67

PAIN0054G 09/01/1998

	Rates	Fringes
CHELAN AND KITTITAS COUNTIES		
GLAZIERS	15.87	3.17

PAIN0054I 06/01/1998

	Rates	Fringes
CHELAN AND KITTITAS COUNTIES		
DRYWALL FINISHER (TAPER)	19.37	4.24

PAIN0055M 02/01/1996

	Rates	Fringes
PACIFIC COUNTY		
DRYWALL FINSIHERS	22.15	5.63

* PAIN0188A 01/01/1999

	Rates	Fringes
CLALLAM, JEFFERSON, KING, KITSAP, LEWIS, MASON, PIERCE, SNOHOMISH AND THURSTON COUNTIES		
GLAZIERS	24.25	5.26

PAIN0188B 07/01/1998

	Rates	Fringes
GRAYS HARBOR AND PACIFIC COUNTIES		
GLAZIERS	13.35	4.02

PAIN1238A 06/01/1998

	Rates	Fringes
CALLAM, GRAYS HARBOR, JEFFERSON, LEWIS, MASON, PACIFIC (NORTHERN PORTION), PIERCE AND THURSTON COUNTIES		
SOFT FLOOR LAYERS	19.86	5.61

PAIN1238D 06/01/1998

	Rates	Fringes
KING, KITSAP AND SNOHOMISH COUNTIES		
SOFT FLOOR LAYERS	21.38	5.63

PLAS0072C 06/01/1998

	Rates	Fringes
CHELAN AND KITTITAS COUNTIES		
Zone 1:		
CEMENT MASONS	20.24	5.15

Zone Differential (Add to Zone 1 rates): Zone 2 - $2.00

BASE POINTS: Spokane, Pasco, Moses Lake, and Lewiston

Zone 1: 0 - 45 radius miles from the main post office
Zone 2: 45 radius miles from the main post office

PLAS0082D 06/01/1998

	Rates	Fringes
PACIFIC (South of a straight line made by extending the north boundary line of Wahkiakum County west to the Pacific Ocean) COUNTY		

PLASTERERS	23.16	5.86

PLAS0528B 06/01/1998

	Rates	Fringes

CLALLAM, GRAYS HARBOR, JEFFERSON, KING, KITSAP, LEWIS, MASON, PACIFIC (North of a straight line made by extending the north boundary line of Wahkiakum Count, west to the Pacific Ocean), PIERCE, SNOHOMISH AND THURSTON COUNTIES

CEMENT MASONS	23.80	7.89

PLUM0032A 06/01/1998

	Rates	Fringes

CHELAN AND KITTITAS (NORTHERN TIP) COUNTIES

PLUMBERS AND PIPEFITTERS	23.47	8.67

PLUM0032B 06/01/1998

	Rates	Fringes

CLALLAM, KING AND JEFFERSON COUNTIES

PLUMBERS AND PIPEFITTERS	29.48	10.08

PLUM0082D 06/01/1997

	Rates	Fringes

GRAYS HARBOR, LEWIS, MASON (EXCLUDING NE SECTION), PACIFIC, PIERCE AND THURSTON COUNTIES

PLUMBERS AND PIPEFITTERS		
Total plumbing and piping cost under $250,000	16.35	7.42
Total plumbing and piping cost $250,000 and over and under $500,000	22.05	7.90
Total plumbing and piping cost $500,000 and over	25.72	9.00

PLUM0265A 06/01/1997

	Rates	Fringes

SNOHOMISH COUNTY

PLUMBERS AND PIPEFITTERS:	28.14	9.39

PLUM0598B 06/01/1998

KITTITAS (ALL BUT NORTHERN TIP)	Rates	Fringes
PLUMBERS AND PIPEFITTERS	27.80	9.60

PLUM0631A 06/01/1997

MASON (NE SECTION), AND KITSAP COUNTIES	Rates	Fringes
PLUMBERS/PIPEFITTERS:		
All new construction, additions, and remodeling of commercial building projects such as: cocktail lounges and taverns, professional buildings, medical clinics, retail stores, hotels and motels, restaurants and fast food types, gasoline service stations, and car washes where the plumbing and mechanical cost of the project is less than $100,000	14.55	7.98
All other work where the plumbing and mechanical cost of the project is $100,000 and over	20.78	12.28

ROOF0054A 06/20/1998

CLALLAM, JEFFERSON, KING, KITSAP, MASON AND SNOHOMISH COUNTIES	Rates	Fringes
ROOFERS	23.30	5.73

ROOF0153A 06/01/1998

GRAYS HARBOR, LEWIS, PACIFIC, PIERCE AND THURSTON COUNTIES	Rates	Fringes

ROOFERS	20.60	5.84

ROOF0189A 07/01/1997

	Rates	Fringes
CHELAN COUNTY		
ROOFERS	17.00	6.05

ROOF0189E 07/01/1997

	Rates	Fringes
KITTITAS COUNTY		
ROOFERS	17.60	5.60

---

* SFWA0699B 01/01/1999

	Rates	Fringes
KING, KITSAP, PIERCE, SNOHOMISH AND THURSTON COUNTIES		
SPRINKLER FITTERS	27.25	10.05

SHEE0066D 06/01/1998

	Rates	Fringes
CHELAN COUNTY		
SHEET METAL WORKERS	22.55	6.75

SHEE0066F 06/01/1998

	Rates	Fringes
CLALLAM, JEFFERSON, KING, KITSAP, MASON (NORTHERN PORTION) AND SNOHOMISH COUNTIES		
SHEET METAL WORKERS	27.01	8.32

SHEE0066G 06/01/1998

	Rates	Fringes
GRAYS HARBOR, LEWIS, MASON (SOUTHERN PORTION), PACIFIC, PIERCE AND THURSTON COUNTIES		

SHEET METAL WORKERS	26.77	7.91

SHEE0066M 06/01/1998

	Rates	Fringes
KITTITAS COUNTY		
SHEET METAL WORKERS	23.93	6.87

WA980002 - 1

TEAM0174B 06/01/1998

	Rates	Fringes
CLALLAM, GRAYS HARBOR, JEFFERSON, KING, KITSAP, LEWIS, MASON, PACIFIC (North of a straight line made by extending the north boundary line of Wahkiakum County west to the Pacific Ocean), PIERCE, SNOHOMISH AND THURSTON COUNTIES		
TRUCK DRIVERS:		
GROUP 1:	22.45	7.75
GROUP 2:	21.87	7.75
GROUP 3:	19.93	7.75
GROUP 4:	16.30	7.75
GROUP 5:	21.62	7.75

TRUCK DRIVERS CLASSIFICATIONS

GROUP 1 -"A-frame or Hydralift" trucks and Boom trucks or similar equipment when "A" frame or "Hydralift" and Boom truck or similar equipment is used; Buggymobile; Bulk Cement Tanker; Dumpsters and similar equipment, Tournorockers, Tournowagon, Tournotrailer, Cat DW series, Terra Cobra, Le Tourneau, Westinghouse, Athye Wagon, Eucid Two and Four-Wheeled power tractor with trailer and similar top-loaded equipment transporting material: Dump Trucks, side, end and bottom dump, including semi-trucks and trains or combinations thereof with 16 yards to 30 yards capacity: Over 30 yards $.15 per hour additional for each 10 yard increment; Explosive Truck (field mix) and similar equipment; Hyster Operators (handling bulk loose aggregates); Lowbed and Heavy Duty Trailer; Road Oil Distributor Driver; Spreader, Flaherty Transit mix used exclusively in heavy construction; Water Wagon and Tank Truck-3,000 gallons and over capacity

GROUP 2 - Bulllifts, or similar equipment used in loading or unloading trucks, transporting materials on job site; Dumpsters, and similar equipment, Tournorockers, Tournowagon, Turnotrailer,

Cat. D.W. Series, Terra Cobra, Le Tourneau, Westinghous, Athye wagon, Euclid two and four-wheeled power tractor with trailer and similar top-loaded equipment transporting material, Dump trucks, side, end and bottom dump, including semi-trucks and trains or combinations thereof with less than 16 yards capacity; Flatbed: (Dual Rear Axle); Grease Truck, Fuel Truck, Greaser, Battery Service Man and/or Tire Service Man; Leverman and loader at bunkers and batch plants; Oil tank transport; Scissor, Slurry Truck; Sno-Go and similar equipment; Swampers; Straddler Carrier (Ross, Hyster) and similar equipment; Team Driver; Tractor (small rubber-tired (when used within Teamster jurisdiction); Vacuum truck; Water Wagon and Tank trucks-less than 3,000 gallons capacity; Winch truck; Wrecker, tow truck and similar equipment

GROUP 3 - Flatbed: single rear axle; Pickup sweeper, Pickup Truck (Adjust upward by $2.00 per hour for onsite work)

GROUP 4 - Escort or pilot driver

GROUP 5 - Mechanic

HAZMAT PROJECTS

Anyone working on a HAZMAT job, where HAZMAT certification is

required, shall be compensated as a premium, in addition to the classification working in as follows:
LEVEL C: +$.25 per hour - This level uses an air purifying respirator or additional protective clothing.
LEVEL B: +$.50 per hour - Uses same respirator protection as Level A. Supplied air line is provided in conjunction with a chemical "splash suit."
LEVEL A: +$.75 per hour - This level utilizes a fully-encapsulated suit with a self-contained breathing apparatus or a supplied air line.

ZONE DIFFERENTIAL

Zone pay will be calculated from the city center of the following listed cities:

BELLINGHAM	CENTRALIA	RAYMOND	OLYMPIA
EVERETT	SHELTON	ANACORTES	BELLEVUE
SEATTLE	PORT ANGELES	MT. VERNON	KENT
TACOMA	PORT TOWNSEND	ABERDEEN	BREMERTON

Zone A - 0 - 25 miles - Free Zone
Zone B - 25 - 45 miles - $ .70 per hour
Zone C - Over 45 miles - $1.00 per hour

TEAM0760F 06/01/1998

	Rates	Fringes

EAST OF THE 120TH MERIDIAN: CHELAN AND KITTITAS COUNTIES

(ANYONE WORKING ON HAZMAT
JOBS SEE FOOTNOTE A BELOW)

TRUCK DRIVERS:

GROUP 1	18.63	7.06
GROUP 2	21.22	7.06
GROUP 3	21.33	7.06
GROUP 4	21.65	7.06
GROUP 5	21.76	7.06
GROUP 6	21.91	7.06
GROUP 7	22.44	7.06
GROUP 8	22.75	7.06

TRUCK DRIVERS CLASSIFICATIONS

GROUP 1: Escort Driver or Pilot Car; Employee Haul; Power Boat Hauling Employees or Material

GROUP 2: Fish Truck; Flat Bed Truck; Fork Lift (3000 lbs. and under); Trailer Mounted Hydro Seeder and Mulcher; Leverperson (loading trucks at bunkers); Seeder & Mulcher; Stationary Fuel Operator; Tractor (small, rubber-tired, pulling trailer or similar equipment)

GROUP 3: Auto Crane (2000 lbs. capacity); Buggy Mobile & Similar; Bulk Cement Tanks & Spreader; Dumptor (6 yds. & under);

Flat Bed Truck with Hydraulic System; Fork Lift (3001-16,000 lbs.); Fuel Truck Driver; Steamcleaner & Washer; Power Operated Sweeper; Rubber-tired Tunnel Jumbo; Scissors Truck; Slurry Truck Driver; Straddle Carrier (Ross, Hyster, & similar); Tireperson; Transit Mixers & Truck Hauling Concrete (3 yd. to & including 6 yds.); Trucks, side, end, bottom and articulated end dump (3 yards to and including 6 yds.); Warehouseperson (to include shipping & receiving); Wrecker & Tow Truck

GROUP 4: A-Frame; Burner, Cutter, & Welder; Service Greaser; Trucks, side, end, bottom and articulated end dump (over 6 yds. to & including 12 yds.); Truck Mounted Hydro Seeder; Warehouseperson; Water Tank truck (0-8000 gallons)

GROUP 5: Dumpster (over 6 yds.); Lowboy (50 tons & under); Self-Loading Roll Off; Semi-Truck & Trailer; Tractor with Steer Trailer; Transit Mixers and Trucks Hauling Concrete (over 6 yds. to and including 10 yds.); Trucks, side, end, bottom and articulated end dump (over 12 yds. to & including 20 yds.); Truck-Mounted Crane (with load bearing surface either mounted or pulled)(up to 14 ton); Vacuum Truck (super sucker, guzzler, etc.)

GROUP 6: Flaherty Spreader Box Driver; Flowboys; Fork Lift (over 16,000 lbs.); Dumps (Semi-end); Lowboy (over 50 tons); Mechanic (Field); Transfer Truck and Trailer; Transit Mixers & Trucks Hauling Concrete (over 10 yds. to & including 20 yds.); Trucks, side, end, bottom and end dump (over 20 yds. to & including 40 yds.); Truck and Pup; Tournarocker, DW's & similar with 2 or more 4 wheel-power tractor with trailer, gallonage or yardage scale, whichever is greater; Water Tank Truck (8,001-14,000 gallons)

GROUP 7: Oil Distributor Driver; Stringer Truck (cable operated trailer); Transit Mixers & Hauling Concrete (over 20 yds.); Truck, side, end, bottom and articulated end dump (over 40 yds. to & including 100 yds.); Truck Mounted Crane (with load bearing surface either mounted or pulled (16 through 25 tons)

GROUP 8: Prime Movers and Stinger Truck; Trucks, side, end, bottom and articulated end dump (over 100 yds.); Helicopter Pilot Hauling Employees or Materials

Footnote A- Anyone working on a HAZMAT job, where HAZMAT certification is required, shall be compensated as a premium, in additon to the classification working in as follows:

LEVEL D: - $.25 PER HOUR (This is the lowest level of protection. No respirator is used and skin protection is minimal.
LEVEL C: - $.50 PER HOUR (This level uses an air purifying respirator or additional protective clothing.
LEVEL B: - $.75 PER HOUR (Uses same respirator protection as Level A. Supplied air line is provided in conjunction with a chemical "spash suit."
LEVEL A: - $1.00 PER HOUR (this level utilizes a fully-encapsulated suit with a self-contained breathing apparatus or a supplied air line.

WELDERS - Receive rate prescribed for craft performing operation for which welding is incidental.

Unlisted classifications needed for work not included within the scope of the classifications listed may be added after award only as provided in the labor standards contract clauses (29 CFR 5.5(a)(1)(v)).

In the listing above, the "SU" designation means that rates listed under that identifier do not reflect collectively bargained wage and fringe benefit rates. Other designations indicate unions whose rates have been determined to be prevailing.

WAGE DETERMINATION APPEALS PROCESS

1.) Has there been an initial decision in the matter? This can be:

* an existing published wage determination
* a survey underlying a wage determination
* a Wage and Hour Division letter setting forth a position on a wage determination matter
* a conformance (additional classification and rate) ruling

On survey related matters, initial contact, including requests for summaries of surveys, should be with the Wage and Hour Regional Office for the area in which the survey was conducted because those Regional Offices have responsibility for the Davis-Bacon survey program. If the response from this initial contact is not satisfactory, then the process described in 2.) and 3.) should be followed.

With regard to any other matter not yet ripe for the formal process described here, initial contact should be with the Branch of Construction Wage Determinations. Write to:

Branch of Construction Wage Determinations
Wage and Hour Division
U. S. Department of Labor
200 Constitution Avenue, N. W.
Washington, D. C. 20210

2.) If the answer to the question in 1.) is yes, then an interested party (those affected by the action) can request review and reconsideration from the Wage and Hour Administrator (See 29 CFR Part 1.8 and 29 CFR Part 7). Write to:

Wage and Hour Administrator
U.S. Department of Labor
200 Constitution Avenue, N. W.

Washington, D. C. 20210

The request should be accompanied by a full statement of the interested party's position and by any information (wage payment data, project description, area practice material, etc.) that the requestor considers relevant to the issue.

3.) If the decision of the Administrator is not favorable, an interested party may appeal directly to the Administrative Review Board (formerly the Wage Appeals Board). Write to:

Administrative Review Board
U. S. Department of Labor
200 Constitution Avenue, N. W.
Washington, D. C. 20210

4.) All decisions by the Administrative Review Board are final.

END OF GENERAL DECISION

TABLE OF CONTENTS

TECHNICAL SPECIFICATIONS

Section No.	Section Title
	DIVISION 1 - GENERAL REQUIREMENTS
01001	Supplementary Requirements
01005	Site Specific Supplementary Requirements
01025	Payment
01035	Modification Procedures
01061	Environmental Protection
01300	Submittals
01320	Project Schedule
01415	Metric Measurements
01451	Contractor Quality Control
01501	Construction Facilities and Temporary Controls
01701	Operations and Maintenance Manuals
01702	As Built Records and Drawings
01703	Warranty of Construction
01704	Form 1354 Checklist
01705	Equipment-In-Place List
	DIVISION 02 - SITE WORK
02110	Clearing and Grubbing
02210	Grading (Earthwork)
02221	Excavation, Trenching, and Backfilling for Buildings
02222	Excavation, Trenching, and Backfilling for Utilities Systems
02241	Base Course
02511	Concrete Sidewalks and Curbs and Gutters
02515	Concrete Pavement for Roads and Airfields
02551	Bituminous Paving for Roads, Streets and Open Storage Areas
02580	Pavement Markings
02592	Joint Sealing in Concrete Pavements for Roads and Airfield
02660	Water Distribution System
02720	Storm-Drainage System
02730	Sanitary Sewers
02831	Chain Link Fence
	DIVISION 03 - CONCRETE
03100	Structural Concrete Formwork
03200	Concrete Reinforcement
03250	Joints in Slabs on Grade and Waterstops
03300	Concrete for Building Construction

DIVISION 04 - MASONRY

04200	Masonry

DIVISION 05 - METALS

05120	Structural Steel
05210	Steel Joists
05300	Steel Decking
05500	Miscellaneous Metal

DIVISION 06 - WOODS & PLASTICS

06100	Rough Carpentry
06200	Finish Carpentry
06410	Plastic Laminated Faced Cabinets
06412	Wood Veneer Faced Cabinets With Plastic Laminate Tops

DIVISION 07 - THERMAL & MOISTURE PROTECTION

07160	Bituminous Dampproofing
07212	Mineral Fiber Blanket Thermal Insulation
07214	Board and Block Insulation
07240	Exterior Insulation and Finish System
07270	Firestopping
07413	Metal Wall, Ceiling and Soffit Panels
07416	Structural Standing Seam Metal Roof (SSSMR) System
07600	Sheet Metalwork, General
07900	Joint Sealing

DIVISION 08 - DOORS & WINDOWS

08110	Steel Doors and Frames
08120	Aluminum Doors and Frames
08210	Wood Doors
08330	Overhead Rolling Doors
08353	Accordion Partitions, Folding Doors, and Operable Partitions
08520	Aluminum Windows
08700	Builders' Hardware
08810	Glass and Glazing

DIVISION 09 - FINISHES

09250	Gypsum Wallboard
09310	Ceramic Tile
09510	Acoustical Ceilings
09650	Resilient Flooring
09680	Carpet
09836	Multi-Color Coating
09900	Painting, General
09950	Wallcoverings

DIVISION 10 - SPECIALTIES

10100	Miscellaneous Items
10160	Toilet Partitions
10201	Metal Wall Louvers
10430	Exterior Signage
10440	Interior Signage
10800	Toilet Accessories

DIVISION 11 - Not Used

DIVISION 12 - FURNISHINGS

12520	Window Treatment
12690	Entry Floor Mat

DIVISION 13 - SPECIAL CONSTRUCTION

13083	Seismic Protection for Architectural, Mechanical and Electrical Systems

DIVISION 14 - Not Used

DIVISION 15 - MECHANICAL

15250	Thermal Insulation for Mechanical Systems
15330	Wet Pipe Sprinkler System, Fire Protection
15332	Preaction and Deluge Sprinkler Systems, Fire Protection
15400	Plumbing, General Purpose
15488	Gas Piping Systems
15569	Water and Steam Heating; Oil, Gas or Both; Up To 20 MBTUH
15650	Central Refrigerated Air-Conditioning System
15651	Prefabricated Underground Cooling Distribution Piping System
15895	Air Supply, Distribution, Ventilation, and Exhaust System
15950	Heating, Ventilating and Air Conditioning (HVAC) Control Systems
15990	Testing, Adjusting, and Balancing Of HVAC Systems
15995	Commissioning of HVAC Systems

DIVISION 16 - ELECTRICAL

16370	Electrical Distribution System, Aerial
16375	Electrical Distribution System, Underground
16415	Electrical Work, Interior
16462	Power Conditioning Transformers
16610	Uninterruptible Power Supply (UPS) System above 15 kVA Capacity
16670	Lightning Protection System
16710	Premises Distribution System
16711	Telephone System, Outside Plant
16721	Fire Detection and Alarm System
16726	Intrusion Detection System
16770	Radio and Public Address Systems

END OF SECTION

This page intentionally blank

SECTION 01001

SUPPLEMENTARY REQUIREMENTS

PART 1 GENERAL

1.1 DEFINITIONS

The references listed below are to be defined as indicated wherever they may be used in the TECHNICAL SPECIFICATIONS.

"SUPPLEMENTARY REQUIREMENTS " shall be read to pertain to any of the sections of the DIVISION 1 as required by the content of the section or paragraph containing the reference.

Specification “SECTION 01300 – SUBMITTALS” shall be read as a specification “SECTION 01330 – SUBMITTALS”.

1.2 CONSTRUCTION SCHEDULING

The instructions for preparation and submittal of the Contractor-prepared Network Analysis System are found in SECTION, PROJECT SCHEDULE.

1.3 CORRESPONDENCE

1.3.1 All correspondence shall be addressed to the Administrative Contracting Officer, shall be serially numbered commencing with Number 1, with no numbers missing or duplicated and shall be furnished with an original and one copy. Enclosures attached or transmitted with the correspondence shall also be furnished with an original and one copy. Each serial letter shall make reference to the contract name, contract number and shall have only one subject.

1.3.2 All correspondence from the Contracting Officer will be also serially numbered with no numbers missing or duplicated. Letters to the Contractor will be forwarded in duplicate.

1.3.3 In the event there is more than one project within a contract, correspondence shall contain separate and distinct submittals to identify each project by name.

1.3.4 For submission of Contractor payment requests, See Section 01025, [MEASUREMENT AND] PAYMENT.

1.4 ADVANCED NOTICE OF CONTRACTOR PERFORMED ACCEPTANCE TESTING

The Contractor shall notify the Contracting Officer a minimum of 20 days prior to performing any acceptance or "buy off" testing of the following systems, (1) EMCS, (2) Fire Detection/Protection, (3) Intrusion Detection System, (4) Uninterruptible Power Supply, (5) HVAC, (6) AFFF, and (7) Hydrant Refuel. Advance notification is not required for testing performed as part of fabrication or installation.

1.5 CONTRACTOR'S FILES

Contractor shall maintain "Approved (Action Code "A") and "Approved Except as Noted (Action Code "B") shop drawing files in fabrication shops and at project sites for government use.

1.6 AUDIO-VIDEO RECORDINGS

1.6.1 General

The Contractor shall provide all equipment, materials, and trained personnel to visually and audibly record (videotape) all on site operations and maintenance (O&M) training sessions for this contract. The video technician shall be employed by a video production company that has been in business for a minimum of 2 years. The Contractor shall submit the resume of the technician and video production company. Also the Contractor shall submit for approval an agenda or an outline breakdown of the proposed presentation. Videotapes shall be produced in the VHS format. Audio shall be adjusted, filtered or otherwise controlled to insure that the trainer can be understood at all times. Each system or piece of equipment shall be covered in a single tape or set of tapes which shall be correlated with the O&M manuals provided. Videotapes and their individual storage cases shall be identified with a typewritten label showing the project, equipment or system, and contract number; this same information shall be provided as an introduction on each video tape. When two or more tapes are provided, they shall be submitted as a set in an appropriate storage container.

1.6.2 Submittals

Prior to conducting the training sessions the following shall be submitted for approval:

1) A training plan consisting of the agenda or an outline breakdown of the proposed presentation, and

2) The qualifications of the trainer and the video recording technician

Two copies of the video taped material shall be submitted to the Contracting Officer within 10 days after completion of video taping the training sessions.

1.7 MECHANICAL AND ELECTRICAL LAYOUT DRAWINGS

The Contractor shall submit, for Contracting Officer's approval, scaled layout drawings, including appropriate elevations and sections, as required, showing the room arrangement the Contractor proposes for all pieces of mechanical and electrical equipment and appurtenances thereto, such as but not limited to: air conditioning equipment, boilers, compressors, hot water tanks, pumps, electrical control panels, ducts and piping, that are to be located in the room. Mechanical and electrical layouts shall be coordinated to eliminate any conflicts of installed equipment. No payments will be made to the Contractor for furnishing or installing equipment until the layout drawings have been approved by the Contracting Officer. Mechanical and electrical equipment layout drawings shall be identified and submitted as specified herein. Equipment rooms shown on the drawings are of adequate size to accommodate equipment of required capacities as available from several manufacturers with sufficient space left for access, servicing, and removal. The use of equipment items with dimensions such as "to crowd the space" will not be permitted.

1.8 COLOR BOARDS

Three sets of color boards shall be submitted within 60 calendar days after receipt of Notice to Proceed. The board shall include samples of colors and finishes of every finish such as on walls, floors, and ceilings. This would include, but not be limited to, paint, floor and wall tile, acoustical panels, carpet, wall base, plastic laminate, etc. Where special finishes such as architectural concrete or prefinished metal panels are required, samples of not less than 305 mm (12 inches) square shall be submitted with the board. Boards shall include, where applicable, color samples of integrally colored block, brick, and prefinished metal roofing and siding. The board shall be 610 mm by 610 mm (24 inches by 24 inches). If more space is needed, more than one board per set may be submitted. This is not meant to replace the samples called for in other portions of the specifications. The Contractor shall certify that he has reviewed the color boards in detail and that they are in strict accordance with the contract drawings and specifications, except as may be otherwise explicitly stated.

1.9 IDENTIFICATION OF EMPLOYEES AND MILITARY REGULATIONS:

(a) The Contractor shall be responsible for compliance with all regulations and orders of the Commanding Officer of the Military Installation, respecting identification of employees, movements on installation, parking, truck entry, and all other military regulations which may affect the work.

(b) The work under this Contract is to be performed at an operating Military Installation with consequent restrictions on entry and movement of nonmilitary personnel and equipment.

(c) The Commanding Officer of Fort Lewis, Washington, has initiated the following specific requirement regarding vehicle registration for this contract.

Contractors performing work on Fort Lewis shall, after award, register all vehicles to be used on the installation with the Vehicle Registration Section of the Law Enforcement Command. Contractor employees entering the installation in privately owned vehicles (POVs) shall also register their vehicles. A copy of contract award, proof of liability insurance, current driver's license and state vehicle registration shall be required to register Contractor, subcontractor, and employee vehicles.

Upon completion of the contract, it shall be the prime contractor's responsibility to collect all vehicle decals issued under the contract including those issued to employees and subcontractors. Decals are to be carefully removed from the vehicle, placed in an envelope and attached to the original documentation (i.e., post vehicle registration document) received with the decal. Decals, with documentation, must be returned to Vehicle Registration, Building 5236. Proof of decal clearance for all vehicles registered under this contract will be issued to the prime contractor and shall be returned to the Contracting Officer prior to final payment.

In the event of contract extension, it shall be the prime contractor's responsibility to report time extension to Vehicle Registration, with evidence of same. For further information, contact Vehicle Registration, Building 5236 (Telephone: (253) 967-7668), Fort Lewis, Washington 98433-5000.

1.10 SPECIAL SAFETY REQUIREMENTS:

All construction activities shall be conducted in strict compliance with the Corps of Engineers Safety and Health Requirements Manual EM 385-1-1, and Occupational Safety and Health Administration regulations, as applicable.

1.10.1 In addition to Safety and Health Requirements Manual EM 385-1-1, and all applicable OSHA standards, the Contractor shall comply with the requirements listed below. Paragraph numbers refer to EM 385-1-1 or are added thereto.

(a) Paragraph 01.A.12: Add new paragraph: Safety Personnel. The Contractor shall designate a person on his staff to manage the Contractor's safety and accident prevention program. This person will provide a point of contact for the Contracting Officer on matters of job safety, and shall be responsible for ensuring the health and safety of on site personnel.

(b) Paragraph 01.D.02, revise as follows:

(1) Replace paragraph 01.D.02c with the following:
"c. Property damage in excess of $2,000.00

(2) Add new paragraph d as follows:
"An injury resulting in a lost workday, not including the day of injury."

1.11 TIME EXTENSIONS FOR UNUSUALLY SEVERE WEATHER (ER 415-1-15 31 OCT 89)

This Paragraph specifies the procedure for the determination of time extensions for unusually severe weather in accordance with the CONTRACT CLAUSE entitled "Default (Fixed Price Construction)". In order for the Contracting Officer to award a time extension under this clause, the following conditions must be satisfied:

1.11.1 The weather experienced at the project site during the contract period must be found to be unusually severe, that is, more severe than the adverse weather anticipated for the project location during any given month.

1.11.2 The unusually severe weather must actually cause a delay to the completion of the project. The delay must be beyond the control and without the fault or negligence of the contractor.

1.11.3 The following schedule of monthly anticipated adverse weather delays is based on National Oceanic and Atmospheric Administration (NOAA) or similar data for the project location and will constitute the base line for monthly weather time evaluations. The contractor's progress schedule must reflect these anticipated adverse weather delays in all weather dependent activities.

MONTHLY ANTICIPATED ADVERSE WEATHER DELAY
WORK DAYS BASED ON (5) DAY WORK WEEK

JAN	FEB	MAR	APR	MAY	JUN	JUL	AUG	SEP	OCT	NOV	DEC	
9	8	8	4	2	3	1	2	4	7	10	10	Ft Lewis/McChord AFB

1.11.4 Upon acknowledgment of the notice to proceed (NTP) and continuing throughout the contract, the contractor will record on the daily QCQ report, the occurrence of adverse weather and resultant impact to normally scheduled work. Actual adverse weather delays must prevent work on critical activities for 50 percent or more of the contractor's scheduled work day.

1.11.5 The number of actual adverse weather delay days shall include days impacted by actual adverse weather (even if adverse weather occurred in previous month), be calculated chronologically from the first to the last day of each month, and be recorded as full days. If the number of actual adverse weather delay days exceeds the number of days anticipated in paragraph 1.14.3, above, the Contracting Officer will convert any qualifying delays to calendar days, giving full consideration for equivalent fair weather work days, and issue a modification in accordance with the contract clause entitled " Default (Fixed Price Construction)".

PARTS 2 AND 3 NOT USED

END OF SECTION

SECTION 01005

SITE SPECIFIC SUPPLEMENTARY REQUIREMENTS

1. CONDUCT OF WORK

1.1 COORDINATION AND ACCESS TO SITE

1.1.1 Coordination with using agencies shall be made through the Contracting Officer to assist the Contractor in completing the work with a minimum of interference and inconvenience.

1.1.2 All Contractor-owned and privately-owned vehicles require an access pass/vehicle decal. This pass is obtained from the Fort Lewis Vehicle Registrar, Building 5236 by showing proof of insurance; the vehicle registration; Washington State driver's license; and a letter with original signature of prime Contractor or his superintendent stating the contract name and number, the contract period for which the pass is required, and the employee's name. See Paragraph IDENTIFICATION OF EMPLOYEES AND MILITARY REGULATIONS in SECTION, SUPPLEMENTARY REQUIREMENTS for specific requirements.

1.1.3 When keys are required for access to facilities on this contract, they shall be obtained through the Contracting Officer.

1.1.3.1 The Contractor shall be responsible for Government-owned keys issued for access to facilities or areas pertinent to this contract.

1.1.3.2 Upon completion of the work in an area, or upon request of the Contracting Officer, the key or keys relevant to the completed areas shall be returned.

1.1.3.3 Should the Contractor lose a key:

a. the Contracting Officer shall be notified, in writing, within three (3) working days after the loss is discovered and

b. should the key not be found before final acceptance, the final contract payment shall be reduced by $100 for each key not returned.

1.1.4 Work hours in the construction area will be restricted to 7:30 a.m. to 4 p.m. daily, Monday through Friday, excluding Federal holidays. Work hours other than as specified above shall be coordinated with and approved by the Contracting Officer.

1.1.5 Contractor's workmen shall have on either a uniform with the firm name and the workman's last name or shall have a badge pinned on with both the firm name and the workman's photograph and full name.

1.2 UTILITY OUTAGES

Contractor shall coordinate utility outages with the Contracting Officer at least 7 days in advance. Outages shall be kept to a minimum and any one outage shall not last more than 2 hours.

1.3 PROTECTION OF GOVERNMENT PROPERTY

In addition to requirements of the CONTRACT CLAUSES, Contractor shall protect all Government property within the buildings in which he is working, except for such property as is required to be demolished. Property which is to be demolished shall be protected until its scheduled demolition time. Protection shall include, but not be limited to, protection from construction generated dust, debris, water, and vibration.

END OF SECTION

SECTION 01025

PAYMENT

PART 1 GENERAL

1.1 GENERAL

The contract price for each item shall constitute full compensation for furnishing all plant, labor, materials, appurtenances, and incidentals and performing all operations necessary to construct and complete the items in accordance with these specifications and the applicable drawings, including surveying performed by the Contractor. Payment for each item shall be considered as full compensation, notwithstanding that minor features may not be mentioned herein. Work paid for under one item will not be paid for under any other item. No separate payment will be made for the work, services, or operations required by the Contractor, as specified in DIVISION 1, GENERAL REQUIREMENTS, to complete the project in accordance with these specifications; all costs thereof shall be considered as incidental to the work.

1.2 PAYMENT

1.2.1 ITEM 0001 (BASE ITEM)

Payment will be made at the contract lump sum price for Item No. 0001, Close Combat Tactical Trainer (CCTT) Facility, except for Items 0002, 0003 and 0004, payment of which shall constitute full compensation for Item No. 0001, complete.

1.2.2 ITEM 0002 (BASE ITEM)

Payment will be made at the contract lump sum price for Item No. 0002, Support Facilities, that includes all work beyond the 1.5 meter line around the building footprint, payment of which shall constitute full compensation for Item No. 0002, complete.

1.2.3 ITEM 0003 (OPTIONAL ITEM)

Payment will be made at the contract unit price for Item No. 0003, Power Conditioners, payment of which shall constitute full compensation for Item No. 0003, complete.

1.2.4 ITEM 0004 (OPTIONAL ITEM)

Payment will be made at the contract lump sum price for Item No. 0004, Intrusion Detection Devices, payment of which shall constitute full compensation for Item No. 0004, complete.

1.3 PROGRESS PAYMENT INVOICE

Requests for payment shall be submitted in accordance with Federal Acquisition Regulations (FAR) Subpart 32.9, entitled "PROMPT PAYMENT", and Paragraphs 52.232-5 and 52.232-27, entitled "Payments Under Fixed-Price Construction Contracts", and "Prompt Payment for Construction Contracts",

respectively. In addition each request shall be submitted in the number of copies and to the designated billing office as shown in the Contract.

PARTS 2 and 3 NOT USED

PROGRESS PAYMENT INVOICE

See Federal Acquisition Regulations (FAR) 32.900, 52.232-5, & 52.232-27

1. PROJECT AND LOCATION	2. DATE
3. CONTRACTOR NAME AND ADDRESS (Must be the same as in the Contract)	4. CONTRACT NO. _____ 5. INVOICE NO.
6. DESCRIPTION OF WORK	7. PERIOD OF PERFORMANCE From: To:
8. DISCOUNT TERMS	
9. OFFICIAL TO WHOM PAYMENT IS TO BE FORWARDED Name: Title: Phone: ( ) -	10. OFFICIAL TO BE NOTIFIED OF DEFECTIVE INVOICE Name: Title: Phone ( ) -

11. CERTIFICATION: I hereby certify, to the best of my knowledge and belief, that

(1) The amounts requested are only for the performance in accordance with the specifications, terms, and conditions of this contract;

(2) Payments to subcontractors and suppliers have been made from previous payments received under the contract, and timely payments will be made from the proceeds of the payment covered by this certification, in accordance with subcontract agreements and the requirements of Chapter 39 of Title 31, United States Code; and

(3) This request for progress payment does not include any amounts which the prime contractor intends to withhold or retain from a subcontractor or supplier in accordance with the terms and conditions of the subcontract.

_____ _____ _____

(Signature) **(Title)** **(Date)**

12. OTHER INFORMATION OR DOCUMENTATION required by Contract. Provide two (2) copies of each (check and attach if applicable): _____ Updated Progress Chart/Schedule _____ Progress Narrative _____ Certified Payrolls (submitted weekly) _____ Safety Exposure Report _____ Updated Submittal \register _____ Progress Photos _____ Subcontractor/Employee Listings	(FOR GOVERNMENT USE ONLY) Retainage: _____% Amt: $_____ Withholdings: $ _____ Reason: _____ _____ Following items are current: As-Builts _____ Yes _____ No O & M Manuals _____ Yes _____ No 1354 Data _____ Yes _____ No Submittal Register _____Yes _____No

END OF SECTION

SECTION 01035

MODIFICATION PROCEDURES

PART 1 GENERAL

1.1 PROPOSED PROJECT MODIFICATIONS:

Price proposals for proposed modifications shall be submitted in accordance with the requirements of the Contract Clause MODIFICATION PROPOSALS - PRICE BREAKDOWNS. If change order work impacts or delays other unchanged contract work, the costs of such impacts or delays shall be included in the proposals and separately identified. Additional instructions for submitting price proposals can be found in NPSP-415-1-1, INSTRUCTION AND INFORMATION FOR CONTRACTORS, a copy of which will be furnished to the Contractor at the Preconstruction Conference. For information applicable to equipment rates used in contract modifications, refer to SECTION, SPECIAL CLAUSES, clause “EQUIPMENT OWNERSHIP AND OPERATING EXPENSE SCHEDULE”.

PART 2 PRODUCTS (NOT USED)

PART 3 EXECUTION (NOT USED)

END OF SECTION

SECTION 01061

ENVIRONMENTAL PROTECTION

PART 1 GENERAL

1.1 SCOPE

This Section covers prevention of environmental pollution and damage as the result of construction operations under this contract. For the purpose of this specification, environmental pollution and damage is defined as the presence of chemical, physical, or biological elements or agents which adversely affect human health or welfare; unfavorably alter ecological balances of importance to human life; affect other species of importance to man; or degrade the utility of the environment for aesthetic, cultural, and/or historical purposes. The control of environmental pollution and damage requires consideration of air, water, and land, and includes management of visual esthetics, noise, and solid waste, as well as pollutants.

1.2 ABBREVIATIONS AND ACRONYMS

AUL	Authorized Use List
BL	Ban List
BMP	Best Management Practice
CFR	Code of Federal Regulations
CO	Contracting Officer
DOT	Department of Transportation
ECO	Environmental Compliance Officer
ENRD	Environmental and Natural Resources Division
EPA	Environmental Protection Agency
HM	Hazardous Material
HMTA	Hazardous Materials Transportation Act
HW	Hazardous Waste
HWT	Hazardous Waste Technician
HWMS	Hazardous Waste Management Section
ISCP	Installation Spill Contingency Plan
MSDS	Material Safety Data Sheets
NFPA	National Fire Protection Association

NOI	Notice of Intent
OSHA	Occupational Safety and Health Act
PCB	Polychlorinated Biphenyls
PPE	Personnel Protective Equipment
PW	Public Works
PSAPCA	Puget Sound Air Pollution Control Agency
SPCCP	Spill Prevention, Control and Countermeasures Plan
WAC	Washington Administrative Code
WISHA	Washington Industrial Safety and Health Act
YTC	Yakima Training Center

1.3 PROTECTION OF ENVIRONMENTAL RESOURCES

The environmental resources within the project boundaries and those affected outside the limits of work under this contract shall be protected during the entire period of this contract. The Contractor shall confine his activities to areas defined on the drawings and specifications.

1.4 LAWS AND REGULATIONS

The Contractor shall comply with all Federal, State, and Local environmental laws and regulations. Specific attention is directed to Fort Lewis Regulation No. 200-1 "Environmental Protection and Enhancement". These specifications supplement these laws and regulations. A package containing plans, lists, and regulatory references is available from Fort Lewis Public Works Environmental and Natural Resources Division (ENRD).

1.5 COORDINATION

The Environmental and Natural Resources Division(ENRD) of PW is the coordinator for all environmental concerns at Fort Lewis and its subinstallations. The Contractor shall make contact with them through PW, Contract Management Branch.

1.6 SUBMITTALS

The following is a summary of required submittals. Complete details and schedules are described in the rest of the section and in the section "SUBMITTAL PROCEDURES."

Hazardous Materials and Hazardous Wastes

Hazardous Materials Inventory Form (Initial and ongoing)

Material Safety Data Sheets (MSDS)

- Hazardous Waste Profile Sheets
- Hazardous Waste Accumulation Log
- Hazardous Waste Manifest
- PCB Transformer Certification and Information

Asbestos

- Permits and any amendments
- Management Plan
- Removal Summary
- Bulk Sample Results
- Air Monitoring Sample Results (Pre-abatement, area, clearance, and personnel)
- Jobsite Entry Logs
- Waste Shipment Record
- Summary of Asbestos Removed and Remaining

Lead-based Paint

- Test results
- Summary of Paint Removed and Remaining

Underground Storage Tanks and Petroleum Contaminated Soil

- Management Plan
- Contractor Qualifications
- Intent to Install Notification
- Installation Checklist
- Cathodic Protection Checklist
- Tightness Testing Checklist
- New UST Use Notification
- Retrofitting/Repair Checklist
- Intent to Close/Change of Service Notification

Site Check/Site Assessment Checklist

Permanent Closure/Change of Service Checklist

Temporary Closure Checklist

Water Resources

Construction Stormwater Permit Notice of Intent

Air Resources

Notice of Construction Permit

Burning Permit

PART 2 MANAGEMENT OF HAZARDOUS MATERIALS AND HAZARDOUS WASTE

2.1 GENERAL

2.1.1 Definitions

2.1.1.1 Hazardous Material (HM)

A useful product that requires special management because it has hazardous characteristics (ignitability, corrosively, reactivity, or toxicity) that could pose dangers to human health or the environment. A HM becomes a Hazardous Waste when it can no longer be used for its intended purpose.

2.1.1.2 Hazardous Waste (HW)

A discarded material with properties that could pose dangers to human health or the environment. A HW either exhibits a hazardous characteristic (ignitability, corrosively, reactivity, or toxicity) or is specifically listed as a HW by the EPA or by the State.

2.1.1.3 Material Safety Data Sheet (MSDS)

A document containing information that manufacturers are required by law to provide on all products they manufacture and sell. The MSDS is useful in evaluating the product to determine if it has hazardous constituents and the type of medical treatment in case of an accident.

2.1.2 Hazardous Waste Management Section (HWMS)

The ENRD HWMS is the coordinator for all HM and HW on the installation. They may be contacted at (253) 967-4786.

2.1.3 Authorized Materials

The Contractor shall only utilize materials on the Fort Lewis Authorized Use List (AUL). Contractors shall not bring materials on the Fort Lewis Ban List (BL) onto Government property. The AUL and BL are maintained by the Fort Lewis PW Environmental and Natural Resources Division (ENRD). Only

materials necessary for and associated with the execution of this Contract will be allowed on Government property.

2.1.4 Contingency Planning and Spill Response

2.1.4.1 The PW ENRD maintains the Fort Lewis Spill Prevention, Control and Countermeasures Plan (SPCCP) and the Installation Spill Contingency Plan (ISCP). Contractors shall comply with the provisions of these plans.

2.1.4.2 Contingency Plan

The Contractor shall maintain on site a written contingency plan for HW accumulation and HM storage areas if it conducts activities on Fort Lewis that generate HW or require storage of HM.

2.1.5 Transportation of HM and HW

Contractors shall comply with all Department of Transportation (DOT) requirements associated with HM/HW, including proper container marking/labeling and vehicle placarding when transporting HM/HW on or off post. Obtain Government approval prior to removal of any HW from the installation. Removal shall only be done by an authorized HW transporter having an EPA Identification Number and with the HW recorded on a Uniform Hazardous Waste Manifest (EPA Form 8700-22).

2.1.6 HM/HW Personnel and Training Requirements

Federal, state, and Army regulations require that individuals who perform functions associated with HM/HW activities be trained for the functions performed.

2.1.6.1 ECO and HWT Appointment

Contractors that generate, store, or handle HM or HW shall appoint an Environmental Compliance Officer (ECO) and a Hazardous Waste Technician (HWT) in writing. The ECO/HWT shall be responsible for assuring the requirements of this specification are met. The ECO/HWT shall be trained in accordance with Washington Department of Ecology regulations before being assigned as the ECO/HWT. The ECO/HTW shall also attend the Hazardous Materials Use, Storage and Disposal Training Course for ECOs/HWTs. The 8 hour course is available weekly from the Fort Lewis ENRD Hazardous Waste Management Section (HWMS) and shall be taken prior to the Contractor generating, storing, or handling HM or HW on the installation.

2.1.6.2 The appropriate personnel involved with handling HM/HW shall be trained in spill response to First Responder Awareness Level as specified in the ISCP.

2.1.6.3 The Contractor shall conduct quarterly contingency plan review and rehearsal.

2.1.6.4 The Contractor shall conduct Hazard Communication training as stated in paragraph 2.2.5.

2.1.6.5 A record of all required training, and the date conducted, shall be maintained for each individual required to be trained and shall be available to the Government at all times.

2.1.7 Inspections and Recordkeeping

The Contractor shall perform weekly inspections of its HM/HW storage, use, and accumulation areas utilizing the attached Environmental Compliance Checklist (Enclosure No. 1). The checklist shall be available on site for inspection.

2.2 HAZARDOUS MATERIALS

2.2.1 Notification

Provide an initial inventory and MSDS copies to PW, Contract Management Branch, of the type, storage location, and quantity stored of all HM before bringing it onto the installation using the Hazardous Material Inventory form (Enclosure No. 2) or a contractor-generated form providing the same information.

2.2.2 Storage Facilities

Facilities shall meet all fire code requirements and provide adequate ventilation, containment, and protection from the elements. Provide warning signs, limit access to the facility, and lock it when it is unattended. Only HM shall be stored in the facility.

2.2.3 Storage and Use

Store HM according to product labels and MSDS requirements. Non-compatible materials shall not be stored together. All containers shall be properly labeled as to contents and in good condition with tight fitting lids. Unopened containers shall be segregated from opened containers. Personal protective equipment(PPE) required by the MSDS or product label shall be available and worn by all personnel who handle the product.

2.2.4 Inspections, Recordkeeping and Reporting

2.2.4.1 A current inventory of the HM storage facility shall be maintained on site and a copy forwarded to PW, Contract Management Branch monthly using the Hazardous Material Inventory form.

2.2.4.2 A current MSDS for each product used or stored must be present and on file.

2.2.5 Hazard Communication Program

Federal codes and Fort Lewis Regulation 385-5 (Fort Lewis Hazard Communication Program and Washington State Hazard Communication Program 296-62) mandate specific requirements for information and training on HM used in the workplace. The Contractor is required to have a written program which explains how personnel are informed and trained concerning HM in the workplace. The written program shall be located at a hazard communication station that is accessible to all Contractor personnel and shall contain the following sections:

2.2.5.1 A current inventory of HM, who is responsible for classifying a product as a HM, and how the inventory is updated.

2.2.5.2 Labels and other forms of Warning

This section shall describe the procedure for insuring that each HM container is clearly labeled and has the appropriate warnings. The section also states who is responsible for labeling requirements and how label information is updated.

2.2.5.3 MSDS File

The location of the MSDS file, who maintains the file, and how personnel may access the file, shall be described. This section shall also describe what is done when a product is received without the MSDS and how the MSDS file is updated.

2.2.5.4 Personnel Training and Information

This section shall describe initial and refresher training provided to personnel concerning the hazards of the HM in the workplace, the training provided, and who conducts the training.

2.2.5.5 Information to Non-Contractor Personnel

This section shall describe how non-Contractor personnel are informed about possible hazards, where MSDS copies can be obtained, and what PPE is required in the workplace.

2.3 HAZARDOUS WASTE

2.3.1 Identification

2.3.1.1 All HW generated by the Contractor must be identified. The presence of any container with contents that are unknown is a violation of Federal and state regulations.

2.3.1.2 The Contractor shall completely characterize the waste stream to identify the waste constituents. Each waste stream identity shall be recorded on a Hazardous Waste Profile Sheet (HWPS) and submitted to PW, Contract Management Branch for approval prior to waste generation. Blank profile sheets are available from the HWMS or Contractor generated equivalent sheets may be used. After waste generation has begun, the Contractor may be required to perform laboratory analyses, at Contractor's expense to verify the waste stream identity if it is not obviously evident from generator knowledge.

2.3.2 Accumulation

2.3.2.1 HW shall be accumulated in waste-compatible, sturdy, leak-proof, closed containers that are Department of Transportation (DOT) approved. For waste to be disposed of on Fort Lewis, YTC and Vancouver Barracks, accumulate wastes only in Government issued HW containers.

2.3.2.2 Each HW container shall be clearly marked or labeled with the words "Hazardous Waste," an easily understood description of the waste, and a hazard associated description or label. All labels shall be obtained from the HWMS.

2.3.2.3 Each container shall be clearly marked with the accumulation start date (the date HW is first placed in the container).

2.3.3 Container Management

2.3.3.1 HW shall be handled in a manner that prevents leaks, spills, fires, and explosions.

2.3.3.2 Container tops and/or bungs shall be serviceable and tightly installed (wrench tight) at all times except when adding material to the container (material should not spill if the container tips over).

2.3.3.3 Containers shall be properly grounded when transferring flammable materials. Containers holding flammable liquids (flash point less than 140 degrees F) shall be grounded.

2.3.3.4 Reactive and ignitable waste containers shall be stored in a manner compatible with NFPA Fire Code requirements.

2.3.3.5 Incompatible wastes shall not be accumulated in the same container or in the same area.

2.3.3.6 The container accumulation area shall be 50 feet from any other occupied building, shall have overhead cover, and shall be capable of being secured. Access to the area shall be restricted to trained personnel who need to be in and use the area. The site shall be locked when not in use.

2.3.3.7 The container accumulation area shall have a secondary containment system capable of collecting and holding spills and leaks. It shall be sized to hold 110% of the volume of the largest container.

2.3.3.8 A minimum of thirty inches of aisle space shall be maintained between container rows.

2.3.3.9 Container markings and labels shall be clearly visible.

2.3.4 Inspection, Recordkeeping and Reporting:

2.3.4.1 A log shall be maintained that records the HW that is accumulated. Each time waste is added, an entry shall be made to the log. The completed weekly HW accumulation log shall be maintained on site and a copy submitted monthly to PW, Contract Management Branch

2.3.4.2 Inspect each accumulation point weekly.

2.3.5 Transportation and Disposal

The Contractor shall be responsible for the transportation and disposal off site of all HW generated from the execution of this contract, unless stated otherwise in this specification.

2.3.5.1 Manifesting

The Contractor or his representative, who provides services that generate, prepare for shipment or transports hazardous waste or provides hazardous waste clean-up/disposal services, shall be responsible for preparing EPA Form 8700-22, Uniform Hazardous Waste Manifest, for the state to which the material is being transported (Washington Administrative Code (WAC) 173-303-180), in accordance with 40 CFR 262.20-23 and 49 CFR Subchapter C. The Contractor shall comply with manifest requirements (40 CFR 263.20-21) and comply with record keeping and reporting requirements (40 CFR 263.22 and WAC 173-303-220). Specific manifesting procedures:

2.3.5.1.1 The Uniform Hazardous Waste Manifest will only be signed by personnel in the HWMS at Building 1210 on Fort Lewis. At Yakima Training Center, it will be signed by the Director of Environmental and Natural Resources, and at Vancouver Barracks, by the Environmental Compliance Officer.

2.3.5.1.2 The Contractor shall provide a copy of the Uniform Hazardous Waste Manifest and supporting documentation (i.e., waste profile and land ban as appropriate) no less than 72 hours in advance of the proposed transporter pick up date.

2.3.5.1.3 The Contractor shall coordinate and schedule transportation pick up dates and times by contacting the hazardous waste management office at (253) 967-4786 or 3268. This will ensure qualified individuals are available for the certification/signature of the manifest and other related documentation. A waste profile (land ban when required) must accompany the manifest to verify description of material being transported.

2.3.5.2 The Contractor shall be responsible for verifying that the shipment is properly identified (profiled), packaged, marked, labeled, and not leaking (49 CFR 174-177). The Contractor shall apply appropriate placards to his vehicle while transporting hazardous materials/waste (49 CFR 172.506).

2.3.5.3 The Contractor shall insure that the transporter and disposal facility have a valid Environmental Protection Agency identification number (40 CFR 263.11, WAC 173-303-060) for the applicable hazardous waste services, i.e., transportation, treatment, storage, or disposal.

2.3.5.4 The Contractor shall ensure that the transporter drivers have current DOT combination licenses. The Contractor shall ensure that the carrier has instructed and trained personnel concerning the applicable Hazardous Materials Transportation Act (HMTA) regulations relevant to their job functions (49 CFR 174.7, 175.20, 176.13, and 177.800).

2.3.5.5 The Contractor or his representatives shall take appropriate action (including cleanup) in the event of a release/spill (40 CFR 263.30-31). If a release/spill occurs on Fort Lewis immediately notify the Fort Lewis Fire Department in accordance with FL Reg 200-1 (Dial 911). Secondary notification shall be made to (253) 967-4786 or 3268.

2.3.5.6 The Contractor shall ensure the transporter and disposal facility shall liability insurance in effect for claims arising out of death or bodily injury and property damage from hazardous material/waste transport, treatment, storage, and disposal, including vehicle liability and legal defense costs in the amount of $1,000,000.00, as evidenced by a certificate of insurance for General, Automobile, and Environmental Liability Coverage.

PART 3. DISPOSAL OF SOLID WASTE

3.1 GENERAL

Except as expressly noted below, the Contractor shall be responsible for the disposal off site of all refuse generated in the course of performance of this contract, to include containers, transport, handling, and dumping fees. All solid wastes shall be placed in containers which are emptied on a regular schedule. The Contractor will not be permitted to deposit refuse in existing garbage cans or refuse dumpsters. No burning of refuse is allowed. All vehicle loads of waste being transported shall be adequately secured to prevent spillage.

3.2 DISPOSAL OF HAZARDOUS WASTE

Hazardous waste shall be disposed of in accordance with Paragraph 2.3, Hazardous Waste.

3.3 DISPOSAL ON FORT LEWIS

Only inert waste (concrete and asphalt) and recyclable materials generated on Fort Lewis may be disposed of at the Fort Lewis landfill without charge as follows:

3.3.1 The Fort Lewis landfill is open between 0730 and ~~1445~~ 1600 on weekdays, except for Federal holidays. All vehicles shall be out of the landfill by 1500. Contractors shall coordinate disposal requirements with the landfill manager (phone (253) 967-3803) two workdays prior to initial disposal. Posted hours are subject to minor changes.

3.3.2 All Contractors entering the Fort Lewis landfill shall have in their possession a copy of the contract allowing use of the landfill. The truck drivers shall know the contract number, the building from which the refuse was taken, their truck number, and the approximate volume of inert waste being hauled. This information shall be provided to the landfill manager upon entry. Vehicles may be denied access to the landfill if this information cannot be provided.

3.3.3 Vehicles using the landfill shall weigh in upon entry and exit.

3.3.4 Vehicles using the landfill are subject to inspection by landfill employees to determine if items being disposed of comply with local, State and Federal regulations on disposal.

3.3.5 The Contractor shall separate recyclable materials and inert waste. Drivers shall ascertain from the landfill manager specific locations to be used for disposal of each type of waste. A recycle center is located within the fenced landfill area. Recyclables include: metals; glass; newspaper; dry, uncontaminated cardboard; computer paper; and ledger paper. Concrete and asphalt shall be separated for disposal in the landfill's inert pit.

3.3.6 Inert material disposed of in the Fort Lewis landfill shall be broken down into maximum lengths of 5 feet, except for masonry and concrete which shall be no more than 3 feet in any dimension. Large volumes (greater than 100 cubic yards per day) of any material must be scheduled with the landfill manager prior to disposal.

3.3.7 Fuel waste, sludge, paint residues, solvents, and thinners are not accepted for disposal at the landfill. The Contractor shall dispose of these items in accordance with all applicable laws and regulations and

paragraph 2.3, Hazardous Waste. Under no circumstances shall these materials be placed in the sanitary or storm sewer systems, nor disposed of on the ground.

3.3.8 Fire Hazard

Cloths, cotton waste, and other combustible materials that might constitute a fire hazard shall be placed in closed metal containers and placed outside and disposed of at the end of each day.

3.3.9 Clean fill materials shall be disposed of on Fort Lewis at a site as directed by PW, Contract Management Branch. Clean fill shall not contain any items such as vegetative material, asphalt, concrete or metals.

~~3.3.10 Contractors may dispose of refuse at the Fort Lewis incinerator. The incinerator hours are 0800 to 1600 on weekdays, except for Federal holidays. Contractors shall coordinate incinerator requirements with the incinerator manager (phone (253) 967-5237) two workdays prior to initial disposal. The incinerator is subject to periodic shutdowns for maintenance. Rescheduling of off-post disposal shall be required in these instances.~~

~~3.3.10.1 Only combustible solid waste will be burned in the incinerator. No hazardous waste as defined by Title 40 of the Code of Federal Regulations, Chapter 261 can be burned or otherwise accepted at the incinerator. No dangerous waste as defined by Section 173-303 of the Washington Administrative Code will be burned or otherwise processed at the incinerator. Other items prohibited by applicable Federal, state or local laws and/or regulations will not be accepted at the Fort Lewis incinerator.~~

~~3.3.10.2 Size Restrictions~~

~~Items to be incinerated must not be larger than three feet on a side (3' x 3' x 3'), unless the item to be burned is composed of a material that is able to be shredded such as wood or plastic, in which case the item must be able to fit within a 40" x 50" opening in the shredder.~~

~~3.3.10.3 Unacceptable Items~~

~~Examples of items not acceptable for incineration are: items acceptable for recycling; inert waste, concrete, rocks, and fill material; hazardous or dangerous wastes; paint or paint thinner; lead painted items; batteries; appliances; computers or circuit boards; gypsum board; and asbestos containing material. The Fort Lewis incinerator manager may inspect and reject other objectionable material not listed here.~~

PART 4. PROTECTION OF LAND RESOURCES

The Contractor shall not remove, cut, deface, injure, or destroy land resources including trees, shrubs, vines, grasses, topsoil, and land forms without special permission from the Contracting Officer except as otherwise specified or indicated.

4.1 TREES REMOVED DURING CONSTRUCTION

Logs from trees removed during construction shall be decked for subsequent disposal by the Government. Decks shall be located so as not to interfere with the construction work and shall be located as directed by PW, Contract Management Branch. Logs shall be sorted by size and placed in separate decks for sawlogs and fuelwood. Trees shall be cut from the stump and limbed to the top before decking.

4.1.1 Sawlogs

Whenever possible logs shall be left in tree length. If trees are too large to be handled tree length, cut 33 foot logs plus 12 inches trim allowance from the butt. The minimum size for a sawlog is 6 diameter inches on the small end and 16 foot in length.

4.1.2 Fuelwood

All logs not suitable for sawlogs shall be placed in a fuelwood deck. The minimum size for a fuelwood log is 5 inches diameter on the large end and 8 feet in length.

4.2 RESTORATION OF LANDSCAPE DAMAGE

All landscape features (vegetation - such as trees, plants, and grass) damaged or destroyed during Contractor operations outside and within the work areas shall be restored by the Contractor to a condition similar to that which existed prior to construction activities unless otherwise indicated on the drawings or in the specifications. All vegetation that was removed or damaged consisting of native species shall be replaced with native species. If the area had been previously landscaped with non-native species then similar plants shall be used for replacement. Landscaping shall be maintained for a minimum of 60 days after planting, to include irrigation.

4.2.1 Tree Protection

Care shall be exercised by the Contractor when excavating trenches in the vicinity of trees. Where roots are two inches in diameter or greater, the trench shall be excavated by hand or tunneled. When large roots are exposed, they shall be wrapped with a heavy burlap for protection and to prevent drying. Trenches dug by machines adjacent to trees having roots less than two inches in diameter shall have the sides hand trimmed, making a clean cut of the roots. Trenches having exposed tree roots shall be backfilled within 24 hours unless adequately protected by moist burlap or canvas.

4.2.2 Plant Replacement: Trees shall be replaced in kind with a minimum 4-inch caliper nursery stock. Shrubs, vines, and ground cover shall be replaced in kind; size to be approved by the Contracting Officer. All plant material shall meet specifications outlined in ANSI Z60.1 - current publication, "American Standard for Nursery Stock."

4.2.3 Grass

Grass areas shall be replaced in kind by sodding or seeding. Sod shall be required in all regularly maintained lawn areas and shall be installed according to SECTION: TURF. Grass seeding shall be installed on a minimum 6-inch topsoil and according to SECTION: TURF.

4.2.4 Historical Landscaping

Plant material damaged or destroyed within the historical district shall be replaced or repaired as directed by the Contracting Officer.

PART 5. PROTECTION OF WATER RESOURCES

The Contractor shall take all precautions necessary to prevent the introduction of pollutants, either directly or indirectly (non-point sources) to the surface waters of the installation. Pollutants may be carried to receiving waters in stormwater runoff from such sources as lawn maintenance products, sediment from construction activities, oil and grease from motor vehicles and equipment, stockpiles, refuse, etc.

5.1 The Contractor shall utilize Best Management Practices (BMPs) to minimize pollution from construction run-off. Examples include silt fences, straw bales, geotextiles, etc. Appropriate erosion control BMPs shall be used when the potential for significant erosion exists.

5.2 The Contractor shall observe all prescribed setbacks from streams and wetlands as specified in FL REG 200-1.

5.3 WELLHEAD PROTECTION AREAS

Particular care shall be taken to prevent the introduction of any contaminant to the surface in a designated Wellhead Protection Area (WPA). Certain activities that may pose a danger to groundwater resources are prohibited within WPAs.

PART 6. PROTECTION OF AIR RESOURCES

Dust particles, aerosols, and gaseous byproducts from construction activities, processing, and preparation of materials shall be controlled at all times, including weekends, holidays, and hours when work is not in progress. Hydrocarbons and carbon monoxide emissions from equipment shall be controlled to Federal and state allowable limits at all times.

6.1 BURNING NATURAL VEGETATION

All cantonment areas, housing areas and all of North Fort are designated as no burn areas. A burning permit is required for burning natural vegetation in all other areas on Fort Lewis. Burning permits may be obtained from the PW Forestry Section. A copy of the permit shall be submitted to PW, Contract Management Branch.

6.2 NOTICE OF CONSTRUCTION PERMITS

The Contractor shall be responsible for obtaining any necessary Puget Sound Air Pollution Control Agency "Notice of Construction" permits for the construction/installation of new air emission sources under this project. The Contractor is responsible for the associated fees.

6.2.1 The following process shall be followed when filing a Notice of Construction and Application for Approval. The Contractor shall complete the application including the Environmental Checklist (the proper forms can be obtained from the Puget Sound Air Pollution Control Agency (PSAPCA)). The Contractor shall then submit the application and a cashier’s check addressed to PSAPCA for the associated plan examination fee to PW, Contract Management Branch. The application and check are to be submitted in a

sealed envelope clearly marked with PSAPCA Notice of Construction Application and Associated Fee. The Government will review the application. If it is complete and accurate, the Application will be submitted by the Government to PSAPCA with check. If it is not complete or accurate, the Contractor will be requested to submit a revised Application. The Contractor shall allow 30 days for review and submission by the Government. After submission, the Contractor shall allow 75 days for review, negotiation, and approval by PSAPCA. This process time line applies to standard projects. If the project is a major air pollution source which requires other environmental documentation and public comment, the process time should be adjusted accordingly.

6.2.2 The Best Available Control Technology as determined by the regulatory authority shall be utilized on all air pollution sources. The Contracting Officer shall be notified for resolution if this requires a change in the design.

6.2.3 The Contractor is responsible for assuring all the standards/limits included in the Order of Approval to the Notice of Construction and Application for Approval are implemented or met. This includes developing an Operations and Maintenance plan to assure compliance with all environmental requirements and any testing of the air pollution source, the control equipment, or the monitoring equipment required by the Order of Approval or other regulatory requirement (this may be a supplement to any O&M manuals required elsewhere in the technical specifications).

6.2.4 The Contractor is responsible for submitting the Notice of Completion when the construction/installation is complete in accordance with PSAPCA Regulation I Section 6.09(a).

6.2.5 The address on the Notice of Construction and Application for Approval for the property owner as well as the applicant should be PUBLIC WORKS, ATTN: AFZH-DEQ, MS 17E, BOX 339500, FORT LEWIS, WA, 98433-9500.

PART 7. PRESERVATION OF HISTORICAL, CULTURAL, AND ARCHEOLOGICAL RESOURCES

If, during construction activities, the Contractor observes items that might have historical or archeological significance, the Contractor shall immediately contact the Contracting Officer and shall cease all activities that may result in the destruction of these resources and shall prevent its employees from trespassing on, removing, or otherwise damaging such resources.

PART 8. PROTECTION OF FISH AND WILDLIFE

The Contractor shall conduct its operations in a manner that will minimize impacts on surrounding fish and wildlife. If, during construction activities, the Contractor observes any Federal or State protected species, the Contractor shall immediately contact the Contracting Officer and cease all activities at the site.

END OF SECTION

SECTION 01300

SUBMITTALS

PART 1 GENERAL

1.1 CONTROL AND SCHEDULING OF SUBMITTALS

1.1.1 Submittal Coordination Meeting

After the preconstruction conference and before any submittals are sent to the Contracting Officer's Representative (COR), with the exception of Division 1 submittals, the Contractor shall meet with the COR to develop an approved preliminary submittal register, ENG Form 4288. During the meeting all required items will be identified and grouped into three categories:

- Government Approved (GA)

Government approval is required for extensions of design, critical materials, variations/deviations, an "or equal" decision, equipment whose compatibility with the entire system must be checked, architectural items such as Color Charts/Patterns/Textures, and other items as designated by the COR. Within the terms of the Contract Clause entitled "Specifications and Drawings for Construction," these submittals will be acted on as "shop drawings."

- For Information Only (FIO)

Submittals not requiring Government approval will be for information only. These are items such as Installation Procedures, Certificates of compliance, Samples, Qualifications, etc. Within the terms of the Contract Clause entitled "Specifications and Drawings for Construction," these submittals will not be acted on as "shop drawings."

- Those items that can be visually inspected by the Contractor's Quality Control Representative (CQC) on site or are provided to the Government other than with an ENG Form 4025: The items that fall into this category shall remain on the register but shall not be submitted to the COR. For these items, the "Classification" column on the submittal register shall remain blank.

1.1.2 Final Submittal Register

The final submittal register shall be coordinated with the progress schedule and submitted within [40] days of Notice to Proceed. In preparing the final document, adequate time (minimum of 30 days) shall be allowed for review and approval, and possible resubmittal of each item on the register.

1.1.3 Submittal Register Updates

The Contractor's quality control representative shall review the listing at least every 30 days and take appropriate action to maintain an effective system. Copies of updated or corrected listings shall be submitted to the COR at least every 30 days in the quantity specified.

1.2 SUBMITTAL TYPES

Throughout these specifications submittals may be identified with the prefix "SD" (submittal data) followed by a number (category, i.e., data, drawings, reports, etc.). This is for bookkeeping and record sorting in the system:

SD-01 Data

Submittals which provide calculations, descriptions, or documentation regarding the work.

SD-04 Drawings

Submittals which graphically show relationship of various components of the work, schematic diagrams of systems, details of fabrication, layouts of particular elements, connections, and other relational aspects of the work.

SD-06 Instructions

Preprinted material describing installation of a product, system or material, including special notices and material safety data sheets, if any, concerning impedances, hazards, and safety precautions.

SD-07 Schedules

Tabular lists showing location, features, or other pertinent information regarding products, materials, equipment, or components to be used n the work.

SD-08 Statements

A document, required of the Contractor, or through the Contractor from a subcontractor, supplier, installer, or manufacturer to confirm the quality or orderly progression of a portion of the work by documenting procedures, acceptability of methods or personnel, qualifications, or other quality verifications.

SD-09 Reports

Reports of inspections or tests, including analyses and interpretation of test results. Each report shall be properly identified. Test methods used shall be identified and test results shall be recorded.

SD-13 Certificates

Statement signed by an official authorized to certify on behalf of the manufacturer that a product, system or material meets specified requirements. The statement must be dated after the award of this contract and state the Contractor's name and address, project and location, and list specific requirements which are being certified.

SD-14 Samples

Fabricated and/or unfabricated physical examples of materials, products, and/or units of work as complete units or as portions of units.

SD-18 Records

Documentation to record compliance with technical or administrative requirements.

SD-19 Operation and Maintenance Manuals

Data which forms a part of an operation and maintenance manual.

Submittals required by the Contract Clauses and other non-technical parts of the contract are not necessarily included in this section. These type of submittals can be added to the register before or during the submittal coordination meeting.

1.3 APPROVED SUBMITTALS

The approval of submittals by the COR shall not be construed as a complete check, but will indicate only that the general method of construction, materials, detailing and other information are satisfactory. Approval will not relieve the Contractor of the responsibility for any error which may exist. The Contractor, under the CQC requirements of this contract, is responsible for the dimensions and design of adequate connections, details, and satisfactory construction of all work. After submittals have been approved by the COR, no resubmittal for the purpose of substituting materials or equipment will be given consideration.

1.4 DISAPPROVED SUBMITTALS

The Contractor shall make all corrections required by the COR and promptly furnish a corrected submittal in the format and number of copies specified for the initial submittal. If the Contractor considers any correction indicated on the submittals to constitute a change to the contract, written notice, as required under the Contract Clause entitled "Changes," shall be given to the COR.

1.5 PAYMENT

Separate payment will not be made for submittals, and all costs associated therein shall be included in the applicable unit prices or lump sum prices contained in the schedule. Payment will not be made for any material or equipment which does not comply with contract requirements.

PART 2 PRODUCTS (Not Applicable)

PART 3 EXECUTION

3.1 GENERAL

Prior to submittal, all items shall be checked and approved by the Contractor's CQC and each item of the submittal shall be stamped, signed, and dated. Each respective transmittal form (ENG Form 4025) shall be signed and dated by the CQC certifying that the accompanying submittal complies with the contract requirements. This procedure applies to all submittals. Submittals shall include items such as: Contractor's, manufacturer's, or fabricator's drawings; descriptive literature including, but not limited to, catalog cuts, diagrams; operating charts or curves; test reports; test cylinders; samples; O&M manuals including parts lists; certifications; warranties and other such required items. Units of weights and measures used on all submittals shall be the same as the contract drawings. Each submittal shall be complete and in sufficient detail to allow ready determination of compliance with contract requirements.

GA submittals shall be scheduled and made prior to the acquisition of the material or equipment covered thereby. The COR may request submittals in addition to those listed when deemed necessary to adequately describe the work covered in the respective sections. The Contractor shall maintain a complete and up-to-date file of all submittals/items on site for use by both the Contractor and the Government.

3.2 SUBMITTAL REGISTER (ENG Form 4288)

The Contractor shall approve all items listed on the submittal register. The ENG Form 4288 in APPENDIX A immediately following this specification Section lists each item of equipment and material for which submittals are required. During the submittal coordination meeting, a preliminary submittal register will be created by annotating this Form 4288. When the final submittal register is submitted for approval, the Contractor shall complete the column entitled “Item No.” and all data under “Contractor Schedule Dates” and return five completed copies to the COR for approval. The Contractor shall review the list to ensure its completeness and may expand general category listings to show individual entries for each item. The numbers in column “Item No.” are to be assigned sequentially starting with "1" for each specification section. DO NOT preassign transmittal numbers when preparing the submittal register. When a conflict exists between the submittal register and a submittal requirement in the technical sections, other than those submittals referenced in Paragraph 3.9: Field Test Reports, the approved submittal register shall govern. The preliminary, and then the final approved submittal register, will become the scheduling documents and will be updated monthly and used to control submittals throughout the life of the contract. Names and titles of individuals authorized by the Contractor to approve shop drawings shall be submitted to COR with the final 4288 form. Supplier or subcontractors certifications are not acceptable as meeting this requirement.

3.3 SCHEDULING

Submittals covering component items forming a system, or items that are interrelated, shall be coordinated and submitted concurrently. Certifications shall be submitted together with other pertinent information and/or drawings. Additional processing time beyond 30 days, or number of copies, may be shown by the COR on the submittal register attached in the “Remarks” column, or may be added by the COR during the coordination meeting. No delays damages or time extensions will be allowed for time lost due to the Contractor not properly scheduling and providing submittals.

3.4 TRANSMITTAL FORM (ENG Form 4025)

Transmittal Form 4025 (sample at end of this section) shall be used for submitting both GA and FIO submittals in accordance with the instructions on the reverse side of the form. Transmittal numbers shall be assigned sequentially. Original 4025 forms shall be used (do not photo copy) and will be furnished by the COR. These forms shall be filled in completely prior to submittal. Special care shall be exercised to ensure proper listing of the specification paragraph and/or sheet number of the contract drawings pertinent to the data submitted for each item.. Each submittal item shall be listed separately on the form, naming subcontractor, supplier, or manufacturer, applicable specification paragraph number(s), drawing/sheet number, pay item number, and any other information needed to identify the item, define its use, and locate it in the work. One or more 4025 forms may be used per specification section, however, DO NOT include more than one specification section per transmittal.

3.5 CROSS-REFERENCE (ENG FORM 4288/ENG FORM 4025)

To provide a cross-reference between the approved submittal register and transmittal forms, the Contractor shall record the "transmittal numbers" assigned when submitting items in column “Transmittal No.” of the ENG FORM 4288. The item numbers in column “Item No.” of submittal register shall correspond to the item numbers on ENG Form 4025.

3.6 SUBMITTAL PROCEDURE

3.6.1 General

Shop drawings with 4025 forms shall be submitted in the number of copies specified in subparagraphs "Government Approved Submittals" and "Information Only Submittals," or as indicated on the submittal register in the “Remarks” column. Submit a complete collated “reviewers copy” with one 4025 form and attachments (not originals). The remaining copies (4 for GA, 2 for FIO) of 4025 forms and attachments shall not be collated. This would not apply to a series of drawings.

3.6.2 Approval of Submittals by the Contractor

Before submittal to the COR, the Contractor shall review and correct shop drawings prepared by subcontractors, suppliers, and itself, for completeness and compliance with plans and specifications. The Contractor shall not use red markings for correcting material to be submitted. Red markings are reserved for COR’s use. Approval by the Contractor shall be indicated on each shop drawing by an approval stamp containing information as shown in this section. Submittals not conforming to the requirements of this section will be returned to the Contractor for correction and resubmittal.

3.6.3 Variations

For submittals which include proposed variations requested by the Contractor, column “h” of ENG Form 4025 shall be checked and the submittal shall be classified as GA, and submitted accordingly. The Contractor shall set forth in writing the justification for any variations and annotate such variations on the transmittal form in the REMARKS block. Variations are not approved unless there is an advantage to the Government. The Government reserves the right to rescind inadvertent approval of submittals containing unnoted variations.

3.6.4 Drawings

Each drawing shall be not larger than A1 size (841 mm wide by 594 mm high), with a title block in lower right hand corner and a 75 mm by 100 mm (3 by 4 inch) clear area adjacent. The title block shall contain the subcontractor's or fabricator's name, contract number, description of item(s), bid item number, and a revision block. Provide a blank margin of 20 mm (3/4 inch) at bottom, 50 mm (2 inches) at left, and 10 mm (1/2 inch) at top and right. Where drawings are submitted for assemblies of more than one piece of equipment or systems of components dependent on each other for compatible characteristics, complete information shall be submitted on all such related components at the same time. The Contractor shall ensure that information is complete and that sequence of drawing submittal is such that all information is available for reviewing each drawing. Drawings for all items and equipment, of special manufacture or fabrication, shall consist of complete assembly and detail drawings. All revisions after initial submittal shall be shown by number, date, and subject in revision block.

3.6.4.1 Submittals Containing Drawings Larger than A3 size, (297 mm high by 420 mm wide)

For GA submittals containing drawings larger than A3 size, one reproducible and one blue line copy will be required to be submitted with five copies of the ENG Form 4025. The marked-up reproducible (and/or any review comments contained on the page-size comment sheet(s) at the Government's option) will be returned to the Contractor upon review. Three copies of blue line drawings (generated from the reviewed reproducible) will be provided to the Government within 10 days of Contractor's receipt of the reviewed reproducible. The Contractor shall not incorporate approved work into the project until the Government has received the three blue line copies. The Contractor shall use the marked-up reproducible to make any additional copies as needed. For FIO submittals, one reproducible and two blue line copies will be required to be submitted with the appropriate number of copies of ENG Form 4025.

3.6.5 Printed Material

All requirements for shop drawings shall apply to catalog cuts, illustrations, printed specifications, or other data submitted, except that the 75 mm by 100 mm (3 inch by 4 inch) clear area adjacent to the title block is not mandatory. Inapplicable portions shall be marked out and applicable items such as model numbers, sizes, and accessories shall be indicated by arrow or highlighted.

3.7 SAMPLES REQUIRING LABORATORY ANALYSIS

See Section 01400 CONTRACTOR QUALITY CONTROL for procedures and address for samples requiring Government testing.

3.8 SAMPLES REQUIRING VISUAL INSPECTION

Samples requiring only physical inspection for appearance and suitability shall be coordinated with the on-site Government quality assurance representative (QAR).

3.9 FIELD TEST REPORTS

Routine tests such as soil density, concrete deliveries, repetitive pressure testing shall be delivered to the QAR with the daily Quality Control reports. See SECTION: CONTRACTOR QUALITY CONTROL.

3.10 CONTROL OF SUBMITTALS

The Contractor shall carefully control his procurement operations to ensure that each individual submittal is made on or before the Contractor scheduled submittal date shown on the approved "Submittal Register."

3.11 GOVERNMENT APPROVED SUBMITTALS (GA)

The Contractor shall submit 5 copies of GA submittals with 5 corresponding 4025 forms. Upon completion of GA submittal review, copies as specified below will be marked with an action code, dated, and returned to the Contractor. See “Drawings” above for special instructions if drawings larger than size A3 (11 inch by 17 inch) are used.

3.11.1 Processing of GA Submittals

Submittals will be reviewed and processed as follows:

a. Approved as Submitted (Action Code "A"): Shop drawings which can be approved without correction will be stamped "Approved" and two copies will be returned to the Contractor. No resubmittal required.

b. Approved Except as Noted (Action Code "B"): Shop drawings which have only minor discrepancies will be annotated in red to indicate necessary corrections. Marked material will be stamped "Approved Except as Noted" and two copies returned to the Contractor for correction. No resubmittal required.

c. Approved Except as Noted (Action Code "C"): Shop drawings which are incomplete or require more than minor corrections will be annotated in red to indicate necessary corrections. Marked material will be stamped "Approved Except as Noted - Resubmission Required" and two copies returned to the Contractor for correction. Resubmittal of only those items needing correction required.

d. Disapproved (Action Code "E"): Shop drawings which are fundamentally in error, cover wrong equipment or construction, or require extensive corrections, will be returned to the Contractor stamped "Disapproved." An explanation will be furnished on the submitted material or on ENG Form 4025 indicating reason for disapproval. Complete resubmittal required.

e. Resubmittal will not be required for shop drawings stamped "A" or "B" unless subsequent changes are made by Contractor or a contract modification. For shop drawings stamped "C" or "E," Contractor shall make corrections required, note any changes by dating the revisions to correspond with the change request date, and promptly resubmit the corrected material. Resubmittals shall be associated with the “parent” by use of sequential alpha characters (for example, resubmittal of transmittal 8 will be 8A, 8B, etc). Government costs incurred after the first resubmittal may be charged to the Contractor.

3.12 INFORMATION ONLY SUBMITTALS (FIO)

The Contractor shall submit three copies of data and four copies of ENG Form 4025. FIO submittals will not be returned. Government approval is not required on FIO submittals. These submittals will be used for information purposes. The Government reserves the right to require the Contractor to resubmit any item found not to comply with the Contract. This does not relieve the Contractor from the obligation to furnish material conforming to the plans and specifications and will not prevent the COR from requiring removal and replacement if nonconforming material is incorporated in the work. This does not relieve the Contractor of the requirement to furnish samples for testing by the Government laboratory or check testing by the Government in those instances where the technical specifications so prescribe.

3.12.1 Processing of FIO Submittals

FIO submittals shall be submitted prior to delivery of the material or equipment to the job site. ENG Form 4025 shall be marked with the words "contractor approved - information copy only" in the REMARKS block of the form. Submittals will be monitored and spot checks made. When such checks indicate noncompliance, the Contractor will be notified by the same method used for GA submittals. Resubmittal of nonconforming FIO submittals shall be reclassified GA and shall be in five copies.

3.13 CONTRACTOR APPROVAL STAMP

The stamp used by the Contractor on the submittal data to certify that the submittal meets contract requirements shall be similar to the following:

CONTRACTOR:
_____
CONTRACT NUMBER
_____

TRANSMITTAL NUMBER _____
ITEM NUMBER _____
SPECIFICATION SECTION _____
PARAGRAPH NUMBER _____
_____ APPROVED AS SUBMITTED
_____ APPROVED WITH CORRECTIONS AS NOTED

SIGNATURE: _____
TITLE: _____
DATE _____

CONTRACTORS REVIEW STAMP

MAXIMUM SIZE:

3 INCHES BY 3 INCHES

TRANSMITTAL OF SHOP DRAWINGS, EQUIPMENT DATA, MATERIAL SAMPLES, OR MANUFACTURER'S CERTIFICATES OF COMPLIANCE

(Read instructions on the reverse side prior to initiating this form)

DATE

TRANSMITTAL NO.

SECTION I - REQUEST FOR APPROVAL OF THE FOLLOWING ITEMS *(This section will be initiated by the contractor)*

TO:

FROM:

CONTRACT NO.

CHECK ONE:
☐ THIS IS A NEW TRANSMITTAL
☐ THIS IS A RESUBMITTAL OF TRANSMITT/_____

SPECIFICATION SEC. NO. *(Cover only one section with each transmittal)*

PROJECT TITLE AND LOCATION

CHECK ONE: THIS TRANSMITTAL IS FOR ☐ FIO ☐ GOV'T. APPROVAL

ITEM NO. *a.*	DESCRIPTION OF ITEM SUBMITTED *(Type size, model number/etc.)* *b.*	MFG OR CONTR. CAT., CURVE DRAWING OR BROCHURE NO. *(See instruction no. 8)* *c.*	NO. OF COPIES *d.*	CONTRACT REFERENCE DOCUMENT: SPEC. PARA. NO. *e.*	CONTRACT REFERENCE DOCUMENT: DRAWING SHEET NO. *f.*	FOR CONTRACTOR USE CODE *g.*	VARIATION *(See instruction No. 8)* *h.*	FOR CE USE CODE *i.*

REMARKS

I certify that the above submitted items have been reviewed in detail and are correct and in strict conformance with the contract drawings and specifications except as otherwise stated.

_____
NAME AND SIGNATURE OF CONTRACTOR

SECTION II - APPROVAL ACTION

ENCLOSURES RETURNED *(List by Item No.)*

NAME, TITLE AND SIGNATURE OF APPROVING AUTHORITY

DATE

ENG FORM 4025-R, MAR 95 *(ER 415-1-10)* EDITION OF SEP 93 IS OBSOLETE. SHEET ___ OF ___ (Reverse, CEMPCB)

INSTRUCTIONS

1. Section I will be initiated by the Contractor in the required number of copies.

2. Each transmittal shall be numbered consecutively in the space provided for "Transmittal No.". This number, in addition to the contract number, will form a serial number for identifying each submittal. For new submittals or resubmittals mark the appropriate box; on resubmittals, insert transmittal number of last submission as well as the new submittal number.

3. The "Item No." will be the same "Item No." as indicated on ENG FORM 4288-R for each entry on this form.

4. Submittals requiring expeditious handling will be submitted on a separate form.

5. Separate transmittal form will be used for submittals under separate sections of the specifications.

6. A check shall be placed in the "Variation" column when a submittal is not in accordance with the plans and specifications--also, a written statement to that effect shall be included in the space provided for "Remarks".

7. Form is self-transmittal, letter of transmittal is not required.

8. When a sample of material or Manufacturer's Certificate of Compliance is transmitted, indicate "Sample" or "Certificate" in column c, Section I.

9. U.S. Army Corps of Engineers approving authority will assign action codes as indicated below in space provided in Section I, column i to each item submitted. In addition they will ensure enclosures are indicated and attached to the form prior to return to the contractor. The Contractor will assign action codes as indicated below in Section I, column g, to each item submitted.

THE FOLLOWING ACTION CODES ARE GIVEN TO ITEMS SUBMITTED

A	--	Approved as submitted.	E	--	Disapproved (See attached).
B	--	Approved, except as noted on drawings.	F	--	Receipt acknowledged.
C	--	Approved, except as noted on drawings. Refer to attached sheet resubmission required.	FX	--	Receipt acknowledged, does not comply as noted with contract requirements.
D	--	Will be returned by separate correspondence.	G	--	Other *(Specify)*

10. Approval of items does not relieve the contractor from complying with all the requirements of the contract plans and specifications.

(Reverse of ENG Form 4025-R)

END OF SECTION

APPENDIX A

SUBMITTAL REGISTER

(ENG FORM 4288)

SUBMITTAL REGISTER
(ER 415 1-10)

CONTRACT NO.

TITLE AND LOCATION
CLOSE COMBAT TACTICAL TRAINER (CCTT), FT. LEWIS, WA

CONTRACTOR

SPECIFICATION SECTION
01001

ACTIVITY NO. a.	TRANS-MITTAL NO. b.	ITEM NO c.	SPECIFICATION PARAGRAPH NUMBER d.	DESCRIPTION OF ITEM SUBMITTED e.	TYPE OF SUBMITTAL: DATA f.	DRAWINGS g.	INSTRUCTIONS h.	SCHEDULES i.	STATEMENTS j.	REPORTS k.	CERTIFICATES l.	SAMPLES m.	RECORDS n.	O&M MANUALS o.	CLASSIFICATION: INFORMATION ONLY p.	GOVERNMENT APPROVED q.	REVIEWER r.	CONTRACTOR SCHEDULE DATES: SUBMIT s.	APPROVAL NEEDED BY t.	MATERIAL NEEDED BY u.	CONTRACTOR ACTION: CODE v.	DATE w.	SUBMIT TO GOVERN-MENT x.	GOVERNMENT ACTION: CODE y.	DATE z.	REMARKS aa.
			1.6	Training Plan					X							X										
			1.6	Qualifications fo the trainer and video					X							X										
				recording technician																						

SUBMITTAL REGISTER
(ER 415 1-10)

CONTRACT NO.

TITLE AND LOCATION
CLOSE COMBAT TACTICAL TRAINER (CCTT), FT. LEWIS, WA

CONTRACTOR

SPECIFICATION SECTION
01320

ACTIVITY NO. a.	TRANS-MITTAL NO. b.	ITEM NO c.	SPECIFICATION PARAGRAPH NUMBER d.	DESCRIPTION OF ITEM SUBMITTED e.	TYPE OF SUBMITTAL: DATA f.	DRAWINGS g.	INSTRUCTIONS h.	SCHEDULES i.	STATEMENTS j.	REPORTS k.	CERTIFICATES l.	SAMPLES m.	RECORDS n.	O&M MANUALS o.	CLASSIFICATION: INFORMATION ONLY p.	GOVERNMENT APPROVED q.	REVIEWER r.	CONTRACTOR SCHEDULE DATES: SUBMIT s.	APPROVAL NEEDED BY t.	MATERIAL NEEDED BY u.	CONTRACTOR ACTION: CODE v.	DATE w.	SUBMIT TO GOVERN-MENT x.	GOVERNMENT ACTION: CODE y.	DATE z.	REMARKS aa.
			1.1	Preliminary project schedule				X								X										
			1.1	Initial project activity				X								X										
			1.1	Periodic schedules updates, monthly				X							X											
				updates																						
			1.1	Qualifications					X							X										

SUBMITTAL REGISTER
(ER 415 1-10)

CONTRACT NO.

TITLE AND LOCATION
CLOSE COMBAT TACTICAL TRAINER (CCTT), FT. LEWIS, WA

CONTRACTOR

SPECIFICATION SECTION
01351

ACTIVITY NO. a.	TRANS-MITTAL NO. b.	ITEM NO c.	SPECIFICATION PARAGRAPH NUMBER d.	DESCRIPTION OF ITEM SUBMITTED e.	TYPE OF SUBMITTAL: DATA f.	DRAWINGS g.	INSTRUCTIONS h.	SCHEDULES i.	STATEMENTS j.	REPORTS k.	CERTIFICATES l.	SAMPLES m.	RECORDS n.	O&M MANUALS o.	CLASSIFICATION: INFORMATION ONLY p.	GOVERNMENT APPROVED q.	REVIEWER r.	CONTRACTOR SCHEDULE DATES: SUBMIT s.	APPROVAL NEEDED BY t.	MATERIAL NEEDED BY u.	CONTRACTOR ACTION: CODE v.	DATE w.	SUBMIT TO GOVERN-MENT x.	GOVERNMENT ACTION: CODE y.	DATE z.	REMARKS aa.
			1.3	Accident Prevention Plan					X							X										

SUBMITTAL REGISTER
(ER 415 1-10)

CONTRACT NO.

TITLE AND LOCATION
CLOSE COMBAT TACTICAL TRAINER (CCTT), FT. LEWIS, WA

CONTRACTOR

SPECIFICATION SECTION
01501

ACTIVITY NO. a.	TRANS-MITTAL NO. b.	ITEM NO c.	SPECIFICATION PARAGRAPH NUMBER d.	DESCRIPTION OF ITEM SUBMITTED e.	TYPE OF SUBMITTAL: DATA f.	DRAWINGS g.	INSTRUCTIONS h.	SCHEDULES i.	STATEMENTS j.	REPORTS k.	CERTIFICATES l.	SAMPLES m.	RECORDS n.	O&M MANUALS o.	CLASSIFICATION: INFORMATION ONLY p.	GOVERNMENT APPROVED q.	REVIEWER r.	CONTRACTOR SCHEDULE DATES: SUBMIT s.	APPROVAL NEEDED BY t.	MATERIAL NEEDED BY u.	CONTRACTOR ACTION: CODE v.	DATE w.	SUBMIT TO GOVERN-MENT x.	GOVERNMENT ACTION: CODE y.	DATE z.	REMARKS aa.
			1.3	Detailed drawings of temporary		X										X										
				power connections																						

SUBMITTAL REGISTER
(ER 415 1-10)

CONTRACT NO.

TITLE AND LOCATION
CLOSE COMBAT TACTICAL TRAINER (CCTT), FT. LEWIS, WA

CONTRACTOR

SPECIFICATION SECTION
01702

ACTIVITY NO. a.	TRANS-MITTAL NO. b.	ITEM NO c.	SPECIFICATION PARAGRAPH NUMBER d.	DESCRIPTION OF ITEM SUBMITTED e.	TYPE OF SUBMITTAL: DATA f.	DRAWINGS g.	INSTRUCTIONS h.	SCHEDULES i.	STATEMENTS j.	REPORTS k.	CERTIFICATES l.	SAMPLES m.	RECORDS n.	O&M MANUALS o.	CLASSIFICATION: INFORMATION ONLY p.	GOVERNMENT APPROVED q.	REVIEWER r.	CONTRACTOR SCHEDULE DATES: SUBMIT s.	APPROVAL NEEDED BY t.	MATERIAL NEEDED BY u.	CONTRACTOR ACTION: CODE v.	DATE w.	SUBMIT TO GOVERN-MENT x.	GOVERNMENT ACTION: CODE y.	DATE z.	REMARKS aa.
			1.1	Electronic File Submittal	X											X										
				Requirements																						
			1.1	Final As-built Drawings		X										X										

SUBMITTAL REGISTER
(ER 415 1-10)

CONTRACT NO.

TITLE AND LOCATION
CLOSE COMBAT TACTICAL TRAINER (CCTT), FT. LEWIS, WA

CONTRACTOR

SPECIFICATION SECTION
01704

ACTIVITY NO. a.	TRANS-MITTAL NO. b.	ITEM NO c.	SPECIFICATION PARAGRAPH NUMBER d.	DESCRIPTION OF ITEM SUBMITTED e.	TYPE OF SUBMITTAL: DATA f.	DRAWINGS g.	INSTRUCTIONS h.	SCHEDULES i.	STATEMENTS j.	REPORTS k.	CERTIFICATES l.	SAMPLES m.	RECORDS n.	O&M MANUALS o.	CLASSIFICATION: INFORMATION ONLY p.	GOVERNMENT APPROVED q.	REVIEWER r.	CONTRACTOR SCHEDULE DATES: SUBMIT s.	APPROVAL NEEDED BY t.	MATERIAL NEEDED BY u.	CONTRACTOR ACTION: CODE v.	DATE w.	SUBMIT TO GOVERN-MENT x.	GOVERNMENT ACTION: CODE y.	DATE z.	REMARKS aa.
			1.2	Form DD 1354					X							X										

SUBMITTAL REGISTER
(ER 415 1-10)

CONTRACT NO.

TITLE AND LOCATION
CLOSE COMBAT TACTICAL TRAINER (CCTT), FT. LEWIS, WA

CONTRACTOR

SPECIFICATION SECTION
01705

ACTIVITY NO. a.	TRANS-MITTAL NO. b.	ITEM NO c.	SPECIFICATION PARAGRAPH NUMBER d.	DESCRIPTION OF ITEM SUBMITTED e.	TYPE OF SUBMITTAL: DATA f.	DRAWINGS g.	INSTRUCTIONS h.	SCHEDULES i.	STATEMENTS j.	REPORTS k.	CERTIFICATES l.	SAMPLES m.	RECORDS n.	O&M MANUALS o.	CLASSIFICATION: INFORMATION ONLY p.	GOVERNMENT APPROVED q.	REVIEWER r.	CONTRACTOR SCHEDULE DATES: SUBMIT s.	APPROVAL NEEDED BY t.	MATERIAL NEEDED BY u.	CONTRACTOR ACTION: CODE v.	DATE w.	SUBMIT TO GOVERN-MENT x.	GOVERNMENT ACTION: CODE y.	DATE z.	REMARKS aa.
			1.1	Final equipment-in-place list						X																

SUBMITTAL REGISTER
(ER 415 1-10)

CONTRACT NO.

TITLE AND LOCATION
CLOSE COMBAT TACTICAL TRAINER (CCTT), FT. LEWIS, WA

CONTRACTOR

SPECIFICATION SECTION
02210

ACTIVITY NO. a.	TRANS-MITTAL NO. b.	ITEM NO c.	SPECIFICATION PARAGRAPH NUMBER d.	DESCRIPTION OF ITEM SUBMITTED e.	TYPE OF SUBMITTAL: DATA f.	DRAWINGS g.	INSTRUCTIONS h.	SCHEDULES i.	STATEMENTS j.	REPORTS k.	CERTIFICATES l.	SAMPLES m.	RECORDS n.	O&M MANUALS o.	CLASSIFICATION: INFORMATION ONLY p.	GOVERNMENT APPROVED q.	REVIEWER r.	CONTRACTOR SCHEDULE DATES: SUBMIT s.	APPROVAL NEEDED BY t.	MATERIAL NEEDED BY u.	CONTRACTOR ACTION: CODE v.	DATE w.	SUBMIT TO GOVERN-MENT x.	GOVERNMENT ACTION: CODE y.	DATE z.	REMARKS aa.
			1.4	Rock for Slope Protection						X						X										
			1.4	Borrow Material						X						X										
			1.4	Field in-Place Denisty Tests						X						X										

SUBMITTAL REGISTER
(ER 415 1-10)

CONTRACT NO.

TITLE AND LOCATION
CLOSE COMBAT TACTICAL TRAINER (CCTT), FT. LEWIS, WA

CONTRACTOR

SPECIFICATION SECTION
02221

ACTIVITY NO. a.	TRANS-MITTAL NO. b.	ITEM NO c.	SPECIFICATION PARAGRAPH NUMBER d.	DESCRIPTION OF ITEM SUBMITTED e.	TYPE OF SUBMITTAL: DATA f.	DRAWINGS g.	INSTRUCTIONS h.	SCHEDULES i.	STATEMENTS j.	REPORTS k.	CERTIFICATES l.	SAMPLES m.	RECORDS n.	O&M MANUALS o.	CLASSIFICATION: INFORMATION ONLY p.	GOVERNMENT APPROVED q.	REVIEWER r.	CONTRACTOR SCHEDULE DATES: SUBMIT s.	APPROVAL NEEDED BY t.	MATERIAL NEEDED BY u.	CONTRACTOR ACTION: CODE v.	DATE w.	SUBMIT TO GOVERN-MENT x.	GOVERNMENT ACTION: CODE y.	DATE z.	REMARKS aa.
			1.3	Borrow Material	X											X										
			1.3	Capillary Water Barrier	X											X										

SUBMITTAL REGISTER
(ER 415 1-10)

CONTRACT NO.

TITLE AND LOCATION
CLOSE COMBAT TACTICAL TRAINER (CCTT), FT. LEWIS, WA

CONTRACTOR

SPECIFICATION SECTION
02222

ACTIVITY NO. a.	TRANS-MITTAL NO. b.	ITEM NO c.	SPECIFICATION PARAGRAPH NUMBER d.	DESCRIPTION OF ITEM SUBMITTED e.	TYPE OF SUBMITTAL: DATA f.	DRAWINGS g.	INSTRUCTIONS h.	SCHEDULES i.	STATEMENTS j.	REPORTS k.	CERTIFICATES l.	SAMPLES m.	RECORDS n.	O&M MANUALS o.	CLASSIFICATION: INFORMATION ONLY p.	GOVERNMENT APPROVED q.	REVIEWER r.	CONTRACTOR SCHEDULE DATES: SUBMIT s.	APPROVAL NEEDED BY t.	MATERIAL NEEDED BY u.	CONTRACTOR ACTION: CODE v.	DATE w.	SUBMIT TO GOVERN-MENT x.	GOVERNMENT ACTION: CODE y.	DATE z.	REMARKS aa.
			3.4.3	Field Density Tests						X						X										
			3.4.2	Testing of Backfill Materials						X						X										

SUBMITTAL REGISTER
(ER 415 1-10)

CONTRACT NO.

TITLE AND LOCATION
CLOSE COMBAT TACTICAL TRAINER (CCTT), FT. LEWIS, WA

CONTRACTOR

SPECIFICATION SECTION
02241

ACTIVITY NO. a.	TRANS-MITTAL NO. b.	ITEM NO c.	SPECIFICATION PARAGRAPH NUMBER d.	DESCRIPTION OF ITEM SUBMITTED e.	TYPE OF SUBMITTAL: DATA f.	DRAWINGS g.	INSTRUCTIONS h.	SCHEDULES i.	STATEMENTS j.	REPORTS k.	CERTIFICATES l.	SAMPLES m.	RECORDS n.	O&M MANUALS o.	CLASSIFICATION: INFORMATION ONLY p.	GOVERNMENT APPROVED q.	REVIEWER r.	CONTRACTOR SCHEDULE DATES: SUBMIT s.	APPROVAL NEEDED BY t.	MATERIAL NEEDED BY u.	CONTRACTOR ACTION: CODE v.	DATE w.	SUBMIT TO GOVERN-MENT x.	GOVERNMENT ACTION: CODE y.	DATE z.	REMARKS aa.
			1.4	Test Results						X					X											

SUBMITTAL REGISTER
(ER 415 1-10)

CONTRACT NO.

TITLE AND LOCATION
CLOSE COMBAT TACTICAL TRAINER (CCTT), FT. LEWIS, WA

CONTRACTOR

SPECIFICATION SECTION
02511

ACTIVITY NO. a.	TRANS-MITTAL NO. b.	ITEM NO c.	SPECIFICATION PARAGRAPH NUMBER d.	DESCRIPTION OF ITEM SUBMITTED e.	TYPE OF SUBMITTAL: DATA f.	DRAWINGS g.	INSTRUCTIONS h.	SCHEDULES i.	STATEMENTS j.	REPORTS k.	CERTIFICATES l.	SAMPLES m.	RECORDS n.	O&M MANUALS o.	CLASSIFICATION: INFORMATION ONLY p.	GOVERNMENT APPROVED q.	REVIEWER r.	CONTRACTOR SCHEDULE DATES: SUBMIT s.	APPROVAL NEEDED BY t.	MATERIAL NEEDED BY u.	CONTRACTOR ACTION: CODE v.	DATE w.	SUBMIT TO GOVERN-MENT x.	GOVERNMENT ACTION: CODE y.	DATE z.	REMARKS aa.
			1.2	Test Reports						X					X											
			1.2	Certificates of Compliance							X				X											
			1.2	Delivery Tickets									X		X											

SUBMITTAL REGISTER
(ER 415 1-10)

CONTRACT NO.

TITLE AND LOCATION
CLOSE COMBAT TACTICAL TRAINER (CCTT), FT. LEWIS, WA

CONTRACTOR

SPECIFICATION SECTION
02551

ACTIVITY NO. a.	TRANS-MITTAL NO. b.	ITEM NO c.	SPECIFICATION PARAGRAPH NUMBER d.	DESCRIPTION OF ITEM SUBMITTED e.	TYPE OF SUBMITTAL: DATA f.	DRAWINGS g.	INSTRUCTIONS h.	SCHEDULES i.	STATEMENTS j.	REPORTS k.	CERTIFICATES l.	SAMPLES m.	RECORDS n.	O&M MANUALS o.	CLASSIFICATION: INFORMATION ONLY p.	GOVERNMENT APPROVED q.	REVIEWER r.	CONTRACTOR SCHEDULE DATES: SUBMIT s.	APPROVAL NEEDED BY t.	MATERIAL NEEDED BY u.	CONTRACTOR ACTION: CODE v.	DATE w.	SUBMIT TO GOVERN-MENT x.	GOVERNMENT ACTION: CODE y.	DATE z.	REMARKS aa.
			1.3	Tests, Preproduction						X						X										
			1.3	Tests, Field						X						X										

SUBMITTAL REGISTER
(ER 415 1-10)

CONTRACT NO.

TITLE AND LOCATION
CLOSE COMBAT TACTICAL TRAINER (CCTT), FT. LEWIS, WA

CONTRACTOR

SPECIFICATION SECTION
02580

ACTIVITY NO. a.	TRANS-MITTAL NO. b.	ITEM NO c.	SPECIFICATION PARAGRAPH NUMBER d.	DESCRIPTION OF ITEM SUBMITTED e.	TYPE OF SUBMITTAL: DATA f.	DRAWINGS g.	INSTRUCTIONS h.	SCHEDULES i.	STATEMENTS j.	REPORTS k.	CERTIFICATES l.	SAMPLES m.	RECORDS n.	O&M MANUALS o.	CLASSIFICATION: INFORMATION ONLY p.	GOVERNMENT APPROVED q.	REVIEWER r.	CONTRACTOR SCHEDULE DATES: SUBMIT s.	APPROVAL NEEDED BY t.	MATERIAL NEEDED BY u.	CONTRACTOR ACTION: CODE v.	DATE w.	SUBMIT TO GOVERN-MENT x.	GOVERNMENT ACTION: CODE y.	DATE z.	REMARKS aa.
			1.2	Equipment Lists	X											X										
			1.2	Material Tests						X					X											
			1.2	Volatile Organic Compound (VOC)							X					X										
				Content																						

SUBMITTAL REGISTER
(ER 415 1-10)

CONTRACT NO.

TITLE AND LOCATION
CLOSE COMBAT TACTICAL TRAINER (CCTT), FT. LEWIS, WA

CONTRACTOR

SPECIFICATION SECTION
02592

ACTIVITY NO. a.	TRANS-MITTAL NO. b.	ITEM NO c.	SPECIFICATION PARAGRAPH NUMBER d.	DESCRIPTION OF ITEM SUBMITTED e.	TYPE OF SUBMITTAL: DATA f.	DRAWINGS g.	INSTRUCTIONS h.	SCHEDULES i.	STATEMENTS j.	REPORTS k.	CERTIFICATES l.	SAMPLES m.	RECORDS n.	O&M MANUALS o.	CLASSIFICATION: INFORMATION ONLY p.	GOVERNMENT APPROVED q.	REVIEWER r.	CONTRACTOR SCHEDULE DATES: SUBMIT s.	APPROVAL NEEDED BY t.	MATERIAL NEEDED BY u.	CONTRACTOR ACTION: CODE v.	DATE w.	SUBMIT TO GOVERN-MENT x.	GOVERNMENT ACTION: CODE y.	DATE z.	REMARKS aa.
			1.4	Test Reports						X						X										

SUBMITTAL REGISTER
(ER 415 1-10)

CONTRACT NO.

TITLE AND LOCATION
CLOSE COMBAT TACTICAL TRAINER (CCTT), FT. LEWIS, WA

CONTRACTOR

SPECIFICATION SECTION
02660

ACTIVITY NO. a.	TRANS-MITTAL NO. b.	ITEM NO c.	SPECIFICATION PARAGRAPH NUMBER d.	DESCRIPTION OF ITEM SUBMITTED e.	TYPE OF SUBMITTAL: DATA f.	DRAWINGS g.	INSTRUCTIONS h.	SCHEDULES i.	STATEMENTS j.	REPORTS k.	CERTIFICATES l.	SAMPLES m.	RECORDS n.	O&M MANUALS o.	CLASSIFICATION: INFORMATION ONLY p.	GOVERNMENT APPROVED q.	REVIEWER r.	CONTRACTOR SCHEDULE DATES: SUBMIT s.	APPROVAL NEEDED BY t.	MATERIAL NEEDED BY u.	CONTRACTOR ACTION: CODE v.	DATE w.	SUBMIT TO GOVERN-MENT x.	GOVERNMENT ACTION: CODE y.	DATE z.	REMARKS aa.
			3.1	Installation			X									X										
			1.5	Waste Water Disposal Method					X							X										
			1.5	Satisfactory Installation					X							X										
			3.3.1	Bacteriological Disinfection						X					X											
			1.4	Manufacturer's Representative							X				X											
			3.1	Installation							X					X										
			2.9.8	Meters							X					X										

SUBMITTAL REGISTER
(ER 415 1-10)

CONTRACT NO.

TITLE AND LOCATION
CLOSE COMBAT TACTICAL TRAINER (CCTT), FT. LEWIS, WA

CONTRACTOR

SPECIFICATION SECTION
02720

ACTIVITY NO. a.	TRANS-MITTAL NO. b.	ITEM NO c.	SPECIFICATION PARAGRAPH NUMBER d.	DESCRIPTION OF ITEM SUBMITTED e.	TYPE OF SUBMITTAL: DATA f.	DRAWINGS g.	INSTRUCTIONS h.	SCHEDULES i.	STATEMENTS j.	REPORTS k.	CERTIFICATES l.	SAMPLES m.	RECORDS n.	O&M MANUALS o.	CLASSIFICATION: INFORMATION ONLY p.	GOVERNMENT APPROVED q.	REVIEWER r.	CONTRACTOR SCHEDULE DATES: SUBMIT s.	APPROVAL NEEDED BY t.	MATERIAL NEEDED BY u.	CONTRACTOR ACTION: CODE v.	DATE w.	SUBMIT TO GOVERN-MENT x.	GOVERNMENT ACTION: CODE y.	DATE z.	REMARKS aa.
			1.2	Installation Procedures			X								X											
			1.2	Certificates of Compliance							X				X											
			1.2	Samples								X			X											

SUBMITTAL REGISTER
(ER 415 1-10)

CONTRACT NO.

TITLE AND LOCATION
CLOSE COMBAT TACTICAL TRAINER (CCTT), FT. LEWIS, WA

CONTRACTOR

SPECIFICATION SECTION
02730

ACTIVITY NO. a.	TRANS-MITTAL NO. b.	ITEM NO c.	SPECIFICATION PARAGRAPH NUMBER d.	DESCRIPTION OF ITEM SUBMITTED e.	TYPE OF SUBMITTAL: DATA f.	DRAWINGS g.	INSTRUCTIONS h.	SCHEDULES i.	STATEMENTS j.	REPORTS k.	CERTIFICATES l.	SAMPLES m.	RECORDS n.	O&M MANUALS o.	CLASSIFICATION: INFORMATION ONLY p.	GOVERNMENT APPROVED q.	REVIEWER r.	CONTRACTOR SCHEDULE DATES: SUBMIT s.	APPROVAL NEEDED BY t.	MATERIAL NEEDED BY u.	CONTRACTOR ACTION: CODE v.	DATE w.	SUBMIT TO GOVERN-MENT x.	GOVERNMENT ACTION: CODE y.	DATE z.	REMARKS aa.
			1.3	Portland Cement							X				X											

SUBMITTAL REGISTER
(ER 415 1-10)

CONTRACT NO.

TITLE AND LOCATION
CLOSE COMBAT TACTICAL TRAINER (CCTT), FT. LEWIS, WA

CONTRACTOR

SPECIFICATION SECTION
02811

ACTIVITY NO. a.	TRANS-MITTAL NO. b.	ITEM NO c.	SPECIFICATION PARAGRAPH NUMBER d.	DESCRIPTION OF ITEM SUBMITTED e.	TYPE OF SUBMITTAL: DATA f.	DRAWINGS g.	INSTRUCTIONS h.	SCHEDULES i.	STATEMENTS j.	REPORTS k.	CERTIFICATES l.	SAMPLES m.	RECORDS n.	O&M MANUALS o.	CLASSIFICATION: INFORMATION ONLY p.	GOVERNMENT APPROVED q.	REVIEWER r.	CONTRACTOR SCHEDULE DATES: SUBMIT s.	APPROVAL NEEDED BY t.	MATERIAL NEEDED BY u.	CONTRACTOR ACTION: CODE v.	DATE w.	SUBMIT TO GOVERN-MENT x.	GOVERNMENT ACTION: CODE y.	DATE z.	REMARKS aa.
			1.4	System pressure calculations	X											X										
			1.4	Irrigation requirements	X											X										
			1.4	Piping, tubing, and fittings	X											X										
			1.4	Valves	X											X										
			1.4	Sprinkler heads	X											X										
			1.4	Automatic controllers	X											X										
			1.4	Solvent cement	X										X											
			1.4	Control wires	X											X										
			1.4	Emitter heads and accessories	X										X											
			1.4	Water hammer arresters	X										X											
			1.4	Sprinkler system		X										X										
			1.4	Irrigation legend		X									X											
			1.4	Automatic controllers			X									X										
			1.4	Sprinkler heads			X									X										
			1.4	Emitter heads and accessories			X								X											
			1.4	Backflow preventers			X								X											
			1.4	Sprinkler head tests						X					X											
			1.4	Valve tests						X					X											
			1.4	Automatic controller tests						X					X											
			1.4	Emitter heads and accessories tests						X					X											
			1.4	Water hammer arrester tests						X					X											
			1.4	Pressure test						X						X										
			1.4	Operation test						X					X											
			1.4	Backflow preventers							X					X										

SUBMITTAL REGISTER
(ER 415 1-10)

CONTRACT NO.

TITLE AND LOCATION
CLOSE COMBAT TACTICAL TRAINER (CCTT), FT. LEWIS, WA

CONTRACTOR

SPECIFICATION SECTION
02831

ACTIVITY NO. a.	TRANS-MITTAL NO. b.	ITEM NO c.	SPECIFICATION PARAGRAPH NUMBER d.	DESCRIPTION OF ITEM SUBMITTED e.	TYPE OF SUBMITTAL: DATA f.	DRAWINGS g.	INSTRUCTIONS h.	SCHEDULES i.	STATEMENTS j.	REPORTS k.	CERTIFICATES l.	SAMPLES m.	RECORDS n.	O&M MANUALS o.	CLASSIFICATION: INFORMATION ONLY p.	GOVERNMENT APPROVED q.	REVIEWER r.	CONTRACTOR SCHEDULE DATES: SUBMIT s.	APPROVAL NEEDED BY t.	MATERIAL NEEDED BY u.	CONTRACTOR ACTION: CODE v.	DATE w.	SUBMIT TO GOVERN-MENT x.	GOVERNMENT ACTION: CODE y.	DATE z.	REMARKS aa.
			1.2	Chain Link Fence							X					X										

SUBMITTAL REGISTER
(ER 415 1-10)

CONTRACT NO.

TITLE AND LOCATION
CLOSE COMBAT TACTICAL TRAINER (CCTT), FT. LEWIS, WA

CONTRACTOR

SPECIFICATION SECTION
02935

ACTIVITY NO. a.	TRANS-MITTAL NO. b.	ITEM NO c.	SPECIFICATION PARAGRAPH NUMBER d.	DESCRIPTION OF ITEM SUBMITTED e.	TYPE OF SUBMITTAL: DATA f.	DRAWINGS g.	INSTRUCTIONS h.	SCHEDULES i.	STATEMENTS j.	REPORTS k.	CERTIFICATES l.	SAMPLES m.	RECORDS n.	O&M MANUALS o.	CLASSIFICATION: INFORMATION ONLY p.	GOVERNMENT APPROVED q.	REVIEWER r.	CONTRACTOR SCHEDULE DATES: SUBMIT s.	APPROVAL NEEDED BY t.	MATERIAL NEEDED BY u.	CONTRACTOR ACTION: CODE v.	DATE w.	SUBMIT TO GOVERN-MENT x.	GOVERNMENT ACTION: CODE y.	DATE z.	REMARKS aa.
			1.2	Manufacturer's Literature	X										X											
			1.2	Equipment List				X							X											
			1.2	Delivery					X						X											
			1.2	Application of Pesticide					X							X										
			1.2	Maintenance Report					X						X											
			1.2	Turf Establishment Period					X							X										
			1.2	Certificates of Compliance							X					X										

SUBMITTAL REGISTER
(ER 415 1-10)

CONTRACT NO.

TITLE AND LOCATION
CLOSE COMBAT TACTICAL TRAINER (CCTT), FT. LEWIS, WA

CONTRACTOR

SPECIFICATION SECTION
02950

ACTIVITY NO. a.	TRANS-MITTAL NO. b.	ITEM NO c.	SPECIFICATION PARAGRAPH NUMBER d.	DESCRIPTION OF ITEM SUBMITTED e.	TYPE OF SUBMITTAL: DATA f.	DRAWINGS g.	INSTRUCTIONS h.	SCHEDULES i.	STATEMENTS j.	REPORTS k.	CERTIFICATES l.	SAMPLES m.	RECORDS n.	O&M MANUALS o.	CLASSIFICATION: INFORMATION ONLY p.	GOVERNMENT APPROVED q.	REVIEWER r.	CONTRACTOR SCHEDULE DATES: SUBMIT s.	APPROVAL NEEDED BY t.	MATERIAL NEEDED BY u.	CONTRACTOR ACTION: CODE v.	DATE w.	SUBMIT TO GOVERN-MENT x.	GOVERNMENT ACTION: CODE y.	DATE z.	REMARKS aa.
			2.7	Edging Material	X											X										
			3.10	Application of Pesticide Material				X								X										
			1.4.2	Delivery					X						X											
			3.10	Application of Pesticide Material					X						X											
			2.2.1	Soil Test						X						X										
			3.4	Percolation Test						X																
			1.2	Ga						X																
			2.2	Topsoil							X					X										
			2.3	Soil Amendments							X					X										
			2.1	Plants							X					X										
			2.10	Pesticide							X					X										
			3.12	Plant Establishment Period									X			X										
			3.12.2.8	Maintenance Report									X		X											
			3.12.2.9	Maintenance Instructions									X		X											

SUBMITTAL REGISTER
(ER 415 1-10)

CONTRACT NO.

TITLE AND LOCATION
CLOSE COMBAT TACTICAL TRAINER (CCTT), FT. LEWIS, WA

CONTRACTOR

SPECIFICATION SECTION
03100

ACTIVITY NO. a.	TRANS-MITTAL NO. b.	ITEM NO c.	SPECIFICATION PARAGRAPH NUMBER d.	DESCRIPTION OF ITEM SUBMITTED e.	TYPE OF SUBMITTAL: DATA f.	DRAWINGS g.	INSTRUCTIONS h.	SCHEDULES i.	STATEMENTS j.	REPORTS k.	CERTIFICATES l.	SAMPLES m.	RECORDS n.	O&M MANUALS o.	CLASSIFICATION: INFORMATION ONLY p.	GOVERNMENT APPROVED q.	REVIEWER r.	CONTRACTOR SCHEDULE DATES: SUBMIT s.	APPROVAL NEEDED BY t.	MATERIAL NEEDED BY u.	CONTRACTOR ACTION: CODE v.	DATE w.	SUBMIT TO GOVERN-MENT x.	GOVERNMENT ACTION: CODE y.	DATE z.	REMARKS aa.
			1.2	Design Analysis and Calculations	X											X										
			1.2	Manufacturer's Data	X											X										
			1.2	Manufacturer's Instructions	X											X										
			1.2	Formwork		X										X										

SUBMITTAL REGISTER
(ER 415 1-10)

CONTRACT NO.

TITLE AND LOCATION
CLOSE COMBAT TACTICAL TRAINER (CCTT), FT. LEWIS, WA

CONTRACTOR

SPECIFICATION SECTION
03200

ACTIVITY NO. a.	TRANS-MITTAL NO. b.	ITEM NO c.	SPECIFICATION PARAGRAPH NUMBER d.	DESCRIPTION OF ITEM SUBMITTED e.	TYPE OF SUBMITTAL: DATA f.	DRAWINGS g.	INSTRUCTIONS h.	SCHEDULES i.	STATEMENTS j.	REPORTS k.	CERTIFICATES l.	SAMPLES m.	RECORDS n.	O&M MANUALS o.	CLASSIFICATION: INFORMATION ONLY p.	GOVERNMENT APPROVED q.	REVIEWER r.	CONTRACTOR SCHEDULE DATES: SUBMIT s.	APPROVAL NEEDED BY t.	MATERIAL NEEDED BY u.	CONTRACTOR ACTION: CODE v.	DATE w.	SUBMIT TO GOVERN-MENT x.	GOVERNMENT ACTION: CODE y.	DATE z.	REMARKS aa.
			1.2	Detail Drawings		X										X										
			1.2	Certified Mill Reports							X					X										

SUBMITTAL REGISTER
(ER 415 1-10)

CONTRACT NO.

TITLE AND LOCATION
CLOSE COMBAT TACTICAL TRAINER (CCTT), FT. LEWIS, WA

CONTRACTOR

SPECIFICATION SECTION
03250

ACTIVITY NO. a.	TRANS-MITTAL NO. b.	ITEM NO c.	SPECIFICATION PARAGRAPH NUMBER d.	DESCRIPTION OF ITEM SUBMITTED e.	TYPE OF SUBMITTAL: DATA f.	DRAWINGS g.	INSTRUCTIONS h.	SCHEDULES i.	STATEMENTS j.	REPORTS k.	CERTIFICATES l.	SAMPLES m.	RECORDS n.	O&M MANUALS o.	CLASSIFICATION: INFORMATION ONLY p.	GOVERNMENT APPROVED q.	REVIEWER r.	CONTRACTOR SCHEDULE DATES: SUBMIT s.	APPROVAL NEEDED BY t.	MATERIAL NEEDED BY u.	CONTRACTOR ACTION: CODE v.	DATE w.	SUBMIT TO GOVERN-MENT x.	GOVERNMENT ACTION: CODE y.	DATE z.	REMARKS aa.
			1.2	Waterstops	X											X										
			1.2	Certificates of Compliance							X				X											

SUBMITTAL REGISTER
(ER 415 1-10)

CONTRACT NO.

TITLE AND LOCATION
CLOSE COMBAT TACTICAL TRAINER (CCTT), FT. LEWIS, WA

CONTRACTOR

SPECIFICATION SECTION
03300

ACTIVITY NO. a.	TRANS-MITTAL NO. b.	ITEM NO c.	SPECIFICATION PARAGRAPH NUMBER d.	DESCRIPTION OF ITEM SUBMITTED e.	TYPE OF SUBMITTAL: DATA f.	DRAWINGS g.	INSTRUCTIONS h.	SCHEDULES i.	STATEMENTS j.	REPORTS k.	CERTIFICATES l.	SAMPLES m.	RECORDS n.	O&M MANUALS o.	CLASSIFICATION: INFORMATION ONLY p.	GOVERNMENT APPROVED q.	REVIEWER r.	CONTRACTOR SCHEDULE DATES: SUBMIT s.	APPROVAL NEEDED BY t.	MATERIAL NEEDED BY u.	CONTRACTOR ACTION: CODE v.	DATE w.	SUBMIT TO GOVERN-MENT x.	GOVERNMENT ACTION: CODE y.	DATE z.	REMARKS aa.
			1.3	Mix Designs (Contractor and Job)	X											X										
			1.3	Laboratory Test Reports						X						X										
			1.3	Certificates of Compliance							X				X											

SUBMITTAL REGISTER
(ER 415 1-10)

CONTRACT NO.

TITLE AND LOCATION
CLOSE COMBAT TACTICAL TRAINER (CCTT), FT. LEWIS, WA

CONTRACTOR

SPECIFICATION SECTION
04200

ACTIVITY NO. a.	TRANS-MITTAL NO. b.	ITEM NO c.	SPECIFICATION PARAGRAPH NUMBER d.	DESCRIPTION OF ITEM SUBMITTED e.	TYPE OF SUBMITTAL: DATA f.	DRAWINGS g.	INSTRUCTIONS h.	SCHEDULES i.	STATEMENTS j.	REPORTS k.	CERTIFICATES l.	SAMPLES m.	RECORDS n.	O&M MANUALS o.	CLASSIFICATION: INFORMATION ONLY p.	GOVERNMENT APPROVED q.	REVIEWER r.	CONTRACTOR SCHEDULE DATES: SUBMIT s.	APPROVAL NEEDED BY t.	MATERIAL NEEDED BY u.	CONTRACTOR ACTION: CODE v.	DATE w.	SUBMIT TO GOVERN-MENT x.	GOVERNMENT ACTION: CODE y.	DATE z.	REMARKS aa.
			2.2	Clay or Shale Brick	X											X										
			2.17	Insulation	X											X										
			1.3	Masonry Work		X										X										
			3.1.2	Cold Weather Installation					X							X										
			3.26.3	Efflorescence Test						X						X										
			2.4.3	Fire-rated CMU						X						X										
			2.2	Clay or Shale Brick							X															
			1.3	FI0							X															
			2.4	Concrete Masonry Units (CMU)							X					X										
			2.15	Control Joint Keys							X				X											
			2.12	Anchors, Ties, and Bar Positioners							X				X											
			2.16	Expansion-Joint Materials							X				X											
			2.13	Joint Reinforcement							X				X											
			2.14	Reinforcing Steel Bars and Rods							X				X											
			2.17	Insulation							X				X		FIO									
			2.17	Insulation							X				X		FIO									
			1.3	Mortar Admixtures							X				X											
			1.3	Grout Admixtures							X				X											
			2.4	Concrete Masonry Units (CMU)								X				X										
			2.8	Precast Concrete Items								X				X										
			2.2	Clay or Shale Brick								X				X										
			2.12	Anchors, Ties, and Bar Positioners								X				X										
			1.3	Expansion-Joint Material								X				X										
			2.13	Joint Reinforcement								X				X										
			2.17	Insulation								X				X										
			1.3	Portable Panel								X				X										

SUBMITTAL REGISTER
(ER 415 1-10)

CONTRACT NO.

TITLE AND LOCATION
CLOSE COMBAT TACTICAL TRAINER (CCTT), FT. LEWIS, WA

CONTRACTOR

SPECIFICATION SECTION
05120

ACTIVITY NO. a.	TRANS-MITTAL NO. b.	ITEM NO c.	SPECIFICATION PARAGRAPH NUMBER d.	DESCRIPTION OF ITEM SUBMITTED e.	TYPE OF SUBMITTAL: DATA f.	DRAWINGS g.	INSTRUCTIONS h.	SCHEDULES i.	STATEMENTS j.	REPORTS k.	CERTIFICATES l.	SAMPLES m.	RECORDS n.	O&M MANUALS o.	CLASSIFICATION: INFORMATION ONLY p.	GOVERNMENT APPROVED q.	REVIEWER r.	CONTRACTOR SCHEDULE DATES: SUBMIT s.	APPROVAL NEEDED BY t.	MATERIAL NEEDED BY u.	CONTRACTOR ACTION: CODE v.	DATE w.	SUBMIT TO GOVERN-MENT x.	GOVERNMENT ACTION: CODE y.	DATE z.	REMARKS aa.
			1.3	Structural Steel System		X										X										
			1.3	Structural Connections		X										X										
			3.2	Erection					X							X										
			1.3	Mill Test Reports							X				X											
			1.3	Welder Qualifications							X					X										
			3.1	Fabrication							X					X										
			2.5	High Strength Bolts and Nuts								X			X											
			1.3	Carbon Steel Bolts and Nuts								X			X											
			2.8	Washers								X			X											

SUBMITTAL REGISTER
(ER 415 1-10)

CONTRACT NO.

TITLE AND LOCATION
CLOSE COMBAT TACTICAL TRAINER (CCTT), FT. LEWIS, WA

CONTRACTOR

SPECIFICATION SECTION
05210

ACTIVITY NO. a.	TRANS-MITTAL NO. b.	ITEM NO c.	SPECIFICATION PARAGRAPH NUMBER d.	DESCRIPTION OF ITEM SUBMITTED e.	TYPE OF SUBMITTAL: DATA f.	DRAWINGS g.	INSTRUCTIONS h.	SCHEDULES i.	STATEMENTS j.	REPORTS k.	CERTIFICATES l.	SAMPLES m.	RECORDS n.	O&M MANUALS o.	CLASSIFICATION: INFORMATION ONLY p.	GOVERNMENT APPROVED q.	REVIEWER r.	CONTRACTOR SCHEDULE DATES: SUBMIT s.	APPROVAL NEEDED BY t.	MATERIAL NEEDED BY u.	CONTRACTOR ACTION: CODE v.	DATE w.	SUBMIT TO GOVERN-MENT x.	GOVERNMENT ACTION: CODE y.	DATE z.	REMARKS aa.
			1.2	Steel Joists		X										X										
			1.2	Steel Joists							X					X										

SUBMITTAL REGISTER
(ER 415 1-10)

CONTRACT NO.

TITLE AND LOCATION
CLOSE COMBAT TACTICAL TRAINER (CCTT), FT. LEWIS, WA

CONTRACTOR

SPECIFICATION SECTION
05300

ACTIVITY NO. a.	TRANS-MITTAL NO. b.	ITEM NO c.	SPECIFICATION PARAGRAPH NUMBER d.	DESCRIPTION OF ITEM SUBMITTED e.	TYPE OF SUBMITTAL: DATA f.	DRAWINGS g.	INSTRUCTIONS h.	SCHEDULES i.	STATEMENTS j.	REPORTS k.	CERTIFICATES l.	SAMPLES m.	RECORDS n.	O&M MANUALS o.	CLASSIFICATION: INFORMATION ONLY p.	GOVERNMENT APPROVED q.	REVIEWER r.	CONTRACTOR SCHEDULE DATES: SUBMIT s.	APPROVAL NEEDED BY t.	MATERIAL NEEDED BY u.	CONTRACTOR ACTION: CODE v.	DATE w.	SUBMIT TO GOVERN-MENT x.	GOVERNMENT ACTION: CODE y.	DATE z.	REMARKS aa.
			2.1	Deck Units	X											X										
			2.1	Deck Units		X										X										
			2.5	Accessories		X										X										
			3.3	Attachments		X										X										
			3.4	Holes and Openings		X										X										
			2.1	Deck Units							X					X										
			3.3	Attachments							X					X										
			3.3	Attachments									X			X										

SUBMITTAL REGISTER
(ER 415 1-10)

CONTRACT NO.

TITLE AND LOCATION
CLOSE COMBAT TACTICAL TRAINER (CCTT), FT. LEWIS, WA

CONTRACTOR

SPECIFICATION SECTION
05500

ACTIVITY NO. a.	TRANS-MITTAL NO. b.	ITEM NO c.	SPECIFICATION PARAGRAPH NUMBER d.	DESCRIPTION OF ITEM SUBMITTED e.	TYPE OF SUBMITTAL: DATA f.	DRAWINGS g.	INSTRUCTIONS h.	SCHEDULES i.	STATEMENTS j.	REPORTS k.	CERTIFICATES l.	SAMPLES m.	RECORDS n.	O&M MANUALS o.	CLASSIFICATION: INFORMATION ONLY p.	GOVERNMENT APPROVED q.	REVIEWER r.	CONTRACTOR SCHEDULE DATES: SUBMIT s.	APPROVAL NEEDED BY t.	MATERIAL NEEDED BY u.	CONTRACTOR ACTION: CODE v.	DATE w.	SUBMIT TO GOVERN-MENT x.	GOVERNMENT ACTION: CODE y.	DATE z.	REMARKS aa.
			1.2	Miscellaneous Metal Items		X									X											

SUBMITTAL REGISTER
(ER 415 1-10)

CONTRACT NO.

TITLE AND LOCATION
CLOSE COMBAT TACTICAL TRAINER (CCTT), FT. LEWIS, WA

CONTRACTOR

SPECIFICATION SECTION
06100

ACTIVITY NO. a.	TRANS-MITTAL NO. b.	ITEM NO c.	SPECIFICATION PARAGRAPH NUMBER d.	DESCRIPTION OF ITEM SUBMITTED e.	TYPE OF SUBMITTAL: DATA f.	DRAWINGS g.	INSTRUCTIONS h.	SCHEDULES i.	STATEMENTS j.	REPORTS k.	CERTIFICATES l.	SAMPLES m.	RECORDS n.	O&M MANUALS o.	CLASSIFICATION: INFORMATION ONLY p.	GOVERNMENT APPROVED q.	REVIEWER r.	CONTRACTOR SCHEDULE DATES: SUBMIT s.	APPROVAL NEEDED BY t.	MATERIAL NEEDED BY u.	CONTRACTOR ACTION: CODE v.	DATE w.	SUBMIT TO GOVERN-MENT x.	GOVERNMENT ACTION: CODE y.	DATE z.	REMARKS aa.
			2.1.1	Grading and Marking							X				X											

SUBMITTAL REGISTER
(ER 415 1-10)

CONTRACT NO.

TITLE AND LOCATION
CLOSE COMBAT TACTICAL TRAINER (CCTT), FT. LEWIS, WA

CONTRACTOR

SPECIFICATION SECTION
06200

ACTIVITY NO. a.	TRANS-MITTAL NO. b.	ITEM NO. c.	SPECIFICATION PARAGRAPH NUMBER d.	DESCRIPTION OF ITEM SUBMITTED e.	TYPE OF SUBMITTAL: DATA f.	DRAWINGS g.	INSTRUCTIONS h.	SCHEDULES i.	STATEMENTS j.	REPORTS k.	CERTIFICATES l.	SAMPLES m.	RECORDS n.	O&M MANUALS o.	CLASSIFICATION: INFORMATION ONLY p.	GOVERNMENT APPROVED q.	REVIEWER r.	CONTRACTOR SCHEDULE DATES: SUBMIT s.	APPROVAL NEEDED BY t.	MATERIAL NEEDED BY u.	CONTRACTOR ACTION: CODE v.	DATE w.	SUBMIT TO GOVERN-MENT x.	GOVERNMENT ACTION: CODE y.	DATE z.	REMARKS aa.
			1.2	Finish Carpentry		X									X											
			2.1.6	Moldings								X			X											

SUBMITTAL REGISTER
(ER 415 1-10)

CONTRACT NO.

TITLE AND LOCATION
CLOSE COMBAT TACTICAL TRAINER (CCTT), FT. LEWIS, WA

CONTRACTOR

SPECIFICATION SECTION
06410

ACTIVITY NO. a.	TRANS-MITTAL NO. b.	ITEM NO c.	SPECIFICATION PARAGRAPH NUMBER d.	DESCRIPTION OF ITEM SUBMITTED e.	TYPE OF SUBMITTAL: DATA f.	DRAWINGS g.	INSTRUCTIONS h.	SCHEDULES i.	STATEMENTS j.	REPORTS k.	CERTIFICATES l.	SAMPLES m.	RECORDS n.	O&M MANUALS o.	CLASSIFICATION: INFORMATION ONLY p.	GOVERNMENT APPROVED q.	REVIEWER r.	CONTRACTOR SCHEDULE DATES: SUBMIT s.	APPROVAL NEEDED BY t.	MATERIAL NEEDED BY u.	CONTRACTOR ACTION: CODE v.	DATE w.	SUBMIT TO GOVERN-MENT x.	GOVERNMENT ACTION: CODE y.	DATE z.	REMARKS aa.
			1.3	Catalog Data	X										X											
			1.3	Drawings		X									X											
			1.3	Certificates							X				X											
			1.3	Plastic Laminates								X				X										

SUBMITTAL REGISTER
(ER 415 1-10)

CONTRACT NO.

TITLE AND LOCATION
CLOSE COMBAT TACTICAL TRAINER (CCTT), FT. LEWIS, WA

CONTRACTOR

SPECIFICATION SECTION
06412

ACTIVITY NO. a.	TRANS-MITTAL NO. b.	ITEM NO c.	SPECIFICATION PARAGRAPH NUMBER d.	DESCRIPTION OF ITEM SUBMITTED e.	TYPE OF SUBMITTAL: DATA f.	DRAWINGS g.	INSTRUCTIONS h.	SCHEDULES i.	STATEMENTS j.	REPORTS k.	CERTIFICATES l.	SAMPLES m.	RECORDS n.	O&M MANUALS o.	CLASSIFICATION: INFORMATION ONLY p.	GOVERNMENT APPROVED q.	REVIEWER r.	CONTRACTOR SCHEDULE DATES: SUBMIT s.	APPROVAL NEEDED BY t.	MATERIAL NEEDED BY u.	CONTRACTOR ACTION: CODE v.	DATE w.	SUBMIT TO GOVERN-MENT x.	GOVERNMENT ACTION: CODE y.	DATE z.	REMARKS aa.
			1.3	Catalog Data	X										X											
			1.3	Drawings		X									X											
			1.3	Certificates							X				X											
			1.3	Wood Veneer								X				X										
			1.3	Plastic Laminate								X				X										

SUBMITTAL REGISTER
(ER 415 1-10)

CONTRACT NO.

TITLE AND LOCATION
CLOSE COMBAT TACTICAL TRAINER (CCTT), FT. LEWIS, WA

CONTRACTOR

SPECIFICATION SECTION
07160

ACTIVITY NO. a.	TRANS-MITTAL NO. b.	ITEM NO c.	SPECIFICATION PARAGRAPH NUMBER d.	DESCRIPTION OF ITEM SUBMITTED e.	TYPE OF SUBMITTAL: DATA f.	DRAWINGS g.	INSTRUCTIONS h.	SCHEDULES i.	STATEMENTS j.	REPORTS k.	CERTIFICATES l.	SAMPLES m.	RECORDS n.	O&M MANUALS o.	CLASSIFICATION: INFORMATION ONLY p.	GOVERNMENT APPROVED q.	REVIEWER r.	CONTRACTOR SCHEDULE DATES: SUBMIT s.	APPROVAL NEEDED BY t.	MATERIAL NEEDED BY u.	CONTRACTOR ACTION: CODE v.	DATE w.	SUBMIT TO GOVERN-MENT x.	GOVERNMENT ACTION: CODE y.	DATE z.	REMARKS aa.
			1.2	Materials							X				X											

SUBMITTAL REGISTER
(ER 415 1-10)

CONTRACT NO.

TITLE AND LOCATION
CLOSE COMBAT TACTICAL TRAINER (CCTT), FT. LEWIS, WA

CONTRACTOR

SPECIFICATION SECTION
07212

ACTIVITY NO. a.	TRANS-MITTAL NO. b.	ITEM NO c.	SPECIFICATION PARAGRAPH NUMBER d.	DESCRIPTION OF ITEM SUBMITTED e.	TYPE OF SUBMITTAL: DATA f.	DRAWINGS g.	INSTRUCTIONS h.	SCHEDULES i.	STATEMENTS j.	REPORTS k.	CERTIFICATES l.	SAMPLES m.	RECORDS n.	O&M MANUALS o.	CLASSIFICATION: INFORMATION ONLY p.	GOVERNMENT APPROVED q.	REVIEWER r.	CONTRACTOR SCHEDULE DATES: SUBMIT s.	APPROVAL NEEDED BY t.	MATERIAL NEEDED BY u.	CONTRACTOR ACTION: CODE v.	DATE w.	SUBMIT TO GOVERN-MENT x.	GOVERNMENT ACTION: CODE y.	DATE z.	REMARKS aa.
			2.1	Blanket insulation	X										X											
			3.3.1	Blanket insulation	X										X											
			2.3	Pressure sensitive tape	X										X											
			2.4	Accessories	X										X											
			1.2	Application of Insulation			X								X											

SUBMITTAL REGISTER
(ER 415 1-10)

CONTRACT NO.

TITLE AND LOCATION
CLOSE COMBAT TACTICAL TRAINER (CCTT), FT. LEWIS, WA

CONTRACTOR

SPECIFICATION SECTION
07214

ACTIVITY NO. a.	TRANS-MITTAL NO. b.	ITEM NO c.	SPECIFICATION PARAGRAPH NUMBER d.	DESCRIPTION OF ITEM SUBMITTED e.	TYPE OF SUBMITTAL: DATA f.	DRAWINGS g.	INSTRUCTIONS h.	SCHEDULES i.	STATEMENTS j.	REPORTS k.	CERTIFICATES l.	SAMPLES m.	RECORDS n.	O&M MANUALS o.	CLASSIFICATION: INFORMATION ONLY p.	GOVERNMENT APPROVED q.	REVIEWER r.	CONTRACTOR SCHEDULE DATES: SUBMIT s.	APPROVAL NEEDED BY t.	MATERIAL NEEDED BY u.	CONTRACTOR ACTION: CODE v.	DATE w.	SUBMIT TO GOVERN-MENT x.	GOVERNMENT ACTION: CODE y.	DATE z.	REMARKS aa.
			2.1	Block or board insulation	X										X											
			2.2	Pressure sensitive tape	X										X											
			2.3	Accessories	X										X											
			2.1	Block or Board Insulation			X								X											
			2.3.1	Adhesive			X								X											

SUBMITTAL REGISTER
(ER 415 1-10)

CONTRACT NO.

TITLE AND LOCATION
CLOSE COMBAT TACTICAL TRAINER (CCTT), FT. LEWIS, WA

CONTRACTOR

SPECIFICATION SECTION
07240

ACTIVITY NO. a.	TRANS-MITTAL NO. b.	ITEM NO c.	SPECIFICATION PARAGRAPH NUMBER d.	DESCRIPTION OF ITEM SUBMITTED e.	TYPE OF SUBMITTAL: DATA f.	DRAWINGS g.	INSTRUCTIONS h.	SCHEDULES i.	STATEMENTS j.	REPORTS k.	CERTIFICATES l.	SAMPLES m.	RECORDS n.	O&M MANUALS o.	CLASSIFICATION: INFORMATION ONLY p.	GOVERNMENT APPROVED q.	REVIEWER r.	CONTRACTOR SCHEDULE DATES: SUBMIT s.	APPROVAL NEEDED BY t.	MATERIAL NEEDED BY u.	CONTRACTOR ACTION: CODE v.	DATE w.	SUBMIT TO GOVERN-MENT x.	GOVERNMENT ACTION: CODE y.	DATE z.	REMARKS aa.
			1.4	Exterior Insulation and Finish System			X								X											
			1.4	Exterior Insulation and Finish System						X					X											
			1.4	Exterior Insulation and Finish System								X			X											
			1.4	Manufacturer's Approval and License					X						X											

SUBMITTAL REGISTER
(ER 415 1-10)

CONTRACT NO.

TITLE AND LOCATION
CLOSE COMBAT TACTICAL TRAINER (CCTT), FT. LEWIS, WA

CONTRACTOR

SPECIFICATION SECTION
07270

ACTIVITY NO. a.	TRANS-MITTAL NO. b.	ITEM NO c.	SPECIFICATION PARAGRAPH NUMBER d.	DESCRIPTION OF ITEM SUBMITTED e.	TYPE OF SUBMITTAL: DATA f.	DRAWINGS g.	INSTRUCTIONS h.	SCHEDULES i.	STATEMENTS j.	REPORTS k.	CERTIFICATES l.	SAMPLES m.	RECORDS n.	O&M MANUALS o.	CLASSIFICATION: INFORMATION ONLY p.	GOVERNMENT APPROVED q.	REVIEWER r.	CONTRACTOR SCHEDULE DATES: SUBMIT s.	APPROVAL NEEDED BY t.	MATERIAL NEEDED BY u.	CONTRACTOR ACTION: CODE v.	DATE w.	SUBMIT TO GOVERN-MENT x.	GOVERNMENT ACTION: CODE y.	DATE z.	REMARKS aa.
			2.1	Firestopping Materials		X									X											
			2.1	Firestopping Materials							X				X											
			1.5	Installer Qualifications							X				X											
			3.3	Inspection							X				X											

SUBMITTAL REGISTER
(ER 415 1-10)

CONTRACT NO.

TITLE AND LOCATION
CLOSE COMBAT TACTICAL TRAINER (CCTT), FT. LEWIS, WA

CONTRACTOR

SPECIFICATION SECTION
07413

ACTIVITY NO. a.	TRANS-MITTAL NO. b.	ITEM NO c.	SPECIFICATION PARAGRAPH NUMBER d.	DESCRIPTION OF ITEM SUBMITTED e.	TYPE OF SUBMITTAL: DATA f.	DRAWINGS g.	INSTRUCTIONS h.	SCHEDULES i.	STATEMENTS j.	REPORTS k.	CERTIFICATES l.	SAMPLES m.	RECORDS n.	O&M MANUALS o.	CLASSIFICATION: INFORMATION ONLY p.	GOVERNMENT APPROVED q.	REVIEWER r.	CONTRACTOR SCHEDULE DATES: SUBMIT s.	APPROVAL NEEDED BY t.	MATERIAL NEEDED BY u.	CONTRACTOR ACTION: CODE v.	DATE w.	SUBMIT TO GOVERN-MENT x.	GOVERNMENT ACTION: CODE y.	DATE z.	REMARKS aa.
			1.3	Wall, Ceiling and Soffit Panels		X									X											
			1.3	Wall, Ceiling and Soffit Panels							X				X											
			3.1	Installation							X				X											
			2.3	Accessories							X				X											
			2.3	Accessories								X			X											
			1.3	Wall, Ceiling and Soffit Panels								X			X											
			2.4	Fasteners								X			X											
			2.6	Gaskets and Insulating Compounds								X			X											
			2.5	Sealant								X			X											

SUBMITTAL REGISTER
(ER 415 1-10)

CONTRACT NO.

TITLE AND LOCATION
CLOSE COMBAT TACTICAL TRAINER (CCTT), FT. LEWIS, WA

CONTRACTOR

SPECIFICATION SECTION
07416

ACTIVITY NO. a.	TRANS-MITTAL NO. b.	ITEM NO c.	SPECIFICATION PARAGRAPH NUMBER d.	DESCRIPTION OF ITEM SUBMITTED e.	TYPE OF SUBMITTAL: DATA f.	DRAWINGS g.	INSTRUCTIONS h.	SCHEDULES i.	STATEMENTS j.	REPORTS k.	CERTIFICATES l.	SAMPLES m.	RECORDS n.	O&M MANUALS o.	CLASSIFICATION: INFORMATION ONLY p.	GOVERNMENT APPROVED q.	REVIEWER r.	CONTRACTOR SCHEDULE DATES: SUBMIT s.	APPROVAL NEEDED BY t.	MATERIAL NEEDED BY u.	CONTRACTOR ACTION: CODE v.	DATE w.	SUBMIT TO GOVERN-MENT x.	GOVERNMENT ACTION: CODE y.	DATE z.	REMARKS aa.
			1.5	Design Analysis	X											X										
			1.5	Structural Standing Seam Metal Roof		X										X										
				System																						
			1.5	Qualifications					X						X											
			1.5	Test Report for Uplift Resistance of						X						X										
				the SSSMR																						
			1.5	Structural Standing Seam Metal Roof							X				X											
				System																						
			2.7	Insulation							X				X											
			2.3	Accessories								X			X											
			2.1	Roof Panels								X			X											
			2.6	Factory Color Finish								X			X											
			2.4	Fasteners								X			X											
			2.7	Insulation								X			X											
			2.9	Gaskets and Insulating Compounds								X			X											
			2.8	Sealant								X			X											
			2.2	Concealed Anchor Clips								X			X											
			2.5	Subpurlins								X			X											
			2.11	EPDM Rubber Boots								X			X											

SUBMITTAL REGISTER
(ER 415 1-10)

CONTRACT NO.

TITLE AND LOCATION
CLOSE COMBAT TACTICAL TRAINER (CCTT), FT. LEWIS, WA

CONTRACTOR

SPECIFICATION SECTION
07600

ACTIVITY NO. a.	TRANS-MITTAL NO. b.	ITEM NO c.	SPECIFICATION PARAGRAPH NUMBER d.	DESCRIPTION OF ITEM SUBMITTED e.	TYPE OF SUBMITTAL: DATA f.	DRAWINGS g.	INSTRUCTIONS h.	SCHEDULES i.	STATEMENTS j.	REPORTS k.	CERTIFICATES l.	SAMPLES m.	RECORDS n.	O&M MANUALS o.	CLASSIFICATION: INFORMATION ONLY p.	GOVERNMENT APPROVED q.	REVIEWER r.	CONTRACTOR SCHEDULE DATES: SUBMIT s.	APPROVAL NEEDED BY t.	MATERIAL NEEDED BY u.	CONTRACTOR ACTION: CODE v.	DATE w.	SUBMIT TO GOVERN-MENT x.	GOVERNMENT ACTION: CODE y.	DATE z.	REMARKS aa.
			2.1	Materials		X									X											

SUBMITTAL REGISTER
(ER 415 1-10)

CONTRACT NO.

TITLE AND LOCATION
CLOSE COMBAT TACTICAL TRAINER (CCTT), FT. LEWIS, WA

CONTRACTOR

SPECIFICATION SECTION
07900

ACTIVITY NO. a.	TRANS-MITTAL NO. b.	ITEM NO c.	SPECIFICATION PARAGRAPH NUMBER d.	DESCRIPTION OF ITEM SUBMITTED e.	TYPE OF SUBMITTAL: DATA f.	DRAWINGS g.	INSTRUCTIONS h.	SCHEDULES i.	STATEMENTS j.	REPORTS k.	CERTIFICATES l.	SAMPLES m.	RECORDS n.	O&M MANUALS o.	CLASSIFICATION: INFORMATION ONLY p.	GOVERNMENT APPROVED q.	REVIEWER r.	CONTRACTOR SCHEDULE DATES: SUBMIT s.	APPROVAL NEEDED BY t.	MATERIAL NEEDED BY u.	CONTRACTOR ACTION: CODE v.	DATE w.	SUBMIT TO GOVERN-MENT x.	GOVERNMENT ACTION: CODE y.	DATE z.	REMARKS aa.
			2.1	Backing	X										X											
			2.2	Bond-Breaker	X										X											
			2.4	Sealant	X										X											
			2.4	Sealant							X				X											

SUBMITTAL REGISTER
(ER 415 1-10)

CONTRACT NO.

TITLE AND LOCATION
CLOSE COMBAT TACTICAL TRAINER (CCTT), FT. LEWIS, WA

CONTRACTOR

SPECIFICATION SECTION
08110

ACTIVITY NO. a.	TRANS-MITTAL NO. b.	ITEM NO c.	SPECIFICATION PARAGRAPH NUMBER d.	DESCRIPTION OF ITEM SUBMITTED e.	TYPE OF SUBMITTAL: DATA f.	DRAWINGS g.	INSTRUCTIONS h.	SCHEDULES i.	STATEMENTS j.	REPORTS k.	CERTIFICATES l.	SAMPLES m.	RECORDS n.	O&M MANUALS o.	CLASSIFICATION: INFORMATION ONLY p.	GOVERNMENT APPROVED q.	REVIEWER r.	CONTRACTOR SCHEDULE DATES: SUBMIT s.	APPROVAL NEEDED BY t.	MATERIAL NEEDED BY u.	CONTRACTOR ACTION: CODE v.	DATE w.	SUBMIT TO GOVERN-MENT x.	GOVERNMENT ACTION: CODE y.	DATE z.	REMARKS aa.
			1.2	Steel Doors and Frames		X									X											
			2.2	Fire Rated Doors						X					X											
			2.2	Fire Rated Doors							X				X											
			2.3	Thermal Insulated Doors							X				X											

SUBMITTAL REGISTER
(ER 415 1-10)

CONTRACT NO.

TITLE AND LOCATION
CLOSE COMBAT TACTICAL TRAINER (CCTT), FT. LEWIS, WA

CONTRACTOR

SPECIFICATION SECTION
08120

ACTIVITY NO. a.	TRANS-MITTAL NO. b.	ITEM NO c.	SPECIFICATION PARAGRAPH NUMBER d.	DESCRIPTION OF ITEM SUBMITTED e.	TYPE OF SUBMITTAL: DATA f.	DRAWINGS g.	INSTRUCTIONS h.	SCHEDULES i.	STATEMENTS j.	REPORTS k.	CERTIFICATES l.	SAMPLES m.	RECORDS n.	O&M MANUALS o.	CLASSIFICATION: INFORMATION ONLY p.	GOVERNMENT APPROVED q.	REVIEWER r.	CONTRACTOR SCHEDULE DATES: SUBMIT s.	APPROVAL NEEDED BY t.	MATERIAL NEEDED BY u.	CONTRACTOR ACTION: CODE v.	DATE w.	SUBMIT TO GOVERN-MENT x.	GOVERNMENT ACTION: CODE y.	DATE z.	REMARKS aa.
			1.4	Aluminum Doors and Frames	X										X											
			1.4	Aluminum Doors and Frames		X									X											
			3.1.2	Installation			X								X											
			1.4	Cleaning			X								X											
			1.4	Full-Glazed and Flush Doors						X					X											
			2.1.1	Finishes								X			X											

SUBMITTAL REGISTER
(ER 415 1-10)

CONTRACT NO.

TITLE AND LOCATION
CLOSE COMBAT TACTICAL TRAINER (CCTT), FT. LEWIS, WA

CONTRACTOR

SPECIFICATION SECTION
08210

ACTIVITY NO. a.	TRANS-MITTAL NO. b.	ITEM NO c.	SPECIFICATION PARAGRAPH NUMBER d.	DESCRIPTION OF ITEM SUBMITTED e.	TYPE OF SUBMITTAL: DATA f.	DRAWINGS g.	INSTRUCTIONS h.	SCHEDULES i.	STATEMENTS j.	REPORTS k.	CERTIFICATES l.	SAMPLES m.	RECORDS n.	O&M MANUALS o.	CLASSIFICATION: INFORMATION ONLY p.	GOVERNMENT APPROVED q.	REVIEWER r.	CONTRACTOR SCHEDULE DATES: SUBMIT s.	APPROVAL NEEDED BY t.	MATERIAL NEEDED BY u.	CONTRACTOR ACTION: CODE v.	DATE w.	SUBMIT TO GOVERN-MENT x.	GOVERNMENT ACTION: CODE y.	DATE z.	REMARKS aa.
			1.3	Wood Doors and Frames		X									X											
			3.1.2	Fire Doors			X								X											
			2.3	Fire Rated Doors							X				X											
			1.3	Adhesives							X				X											

SUBMITTAL REGISTER
(ER 415 1-10)

CONTRACT NO.

TITLE AND LOCATION
CLOSE COMBAT TACTICAL TRAINER (CCTT), FT. LEWIS, WA

CONTRACTOR

SPECIFICATION SECTION
08330

ACTIVITY NO. a.	TRANS-MITTAL NO. b.	ITEM NO c.	SPECIFICATION PARAGRAPH NUMBER d.	DESCRIPTION OF ITEM SUBMITTED e.	TYPE OF SUBMITTAL: DATA f.	DRAWINGS g.	INSTRUCTIONS h.	SCHEDULES i.	STATEMENTS j.	REPORTS k.	CERTIFICATES l.	SAMPLES m.	RECORDS n.	O&M MANUALS o.	CLASSIFICATION: INFORMATION ONLY p.	GOVERNMENT APPROVED q.	REVIEWER r.	CONTRACTOR SCHEDULE DATES: SUBMIT s.	APPROVAL NEEDED BY t.	MATERIAL NEEDED BY u.	CONTRACTOR ACTION: CODE v.	DATE w.	SUBMIT TO GOVERN-MENT x.	GOVERNMENT ACTION: CODE y.	DATE z.	REMARKS aa.
			1.3	Overhead Rolling Door Unit	X										X											
			1.3	Overhead Rolling Door Unit		X									X											
			1.3	Overhead Rolling Door Unit			X								X											
			1.3	Overhead Rolling Door Unit								X			X											
			1.3	Operation Manual										X	X											
			1.3	Maintenance and Repair Manual										X	X											

SUBMITTAL REGISTER
(ER 415 1-10)

CONTRACT NO.

TITLE AND LOCATION
CLOSE COMBAT TACTICAL TRAINER (CCTT), FT. LEWIS, WA

CONTRACTOR

SPECIFICATION SECTION
08353

ACTIVITY NO. a.	TRANS-MITTAL NO. b.	ITEM NO c.	SPECIFICATION PARAGRAPH NUMBER d.	DESCRIPTION OF ITEM SUBMITTED e.	TYPE OF SUBMITTAL: DATA f.	DRAWINGS g.	INSTRUCTIONS h.	SCHEDULES i.	STATEMENTS j.	REPORTS k.	CERTIFICATES l.	SAMPLES m.	RECORDS n.	O&M MANUALS o.	CLASSIFICATION: INFORMATION ONLY p.	GOVERNMENT APPROVED q.	REVIEWER r.	CONTRACTOR SCHEDULE DATES: SUBMIT s.	APPROVAL NEEDED BY t.	MATERIAL NEEDED BY u.	CONTRACTOR ACTION: CODE v.	DATE w.	SUBMIT TO GOVERN-MENT x.	GOVERNMENT ACTION: CODE y.	DATE z.	REMARKS aa.
			2.2	Accordion Partitions	X										X											
			1.2	Operable Partitions	X										X											
			2.2	Accordion Partitions		X									X											
			1.2	Operable Partitions		X									X											
			1.2	Materials							X				X											
			2.2	Accordion Partitions							X				X											
			1.2	Operable Partitions							X				X											
			2.2	Accordion Partitions								X			X											
			1.2	Operable Partitions								X			X											
			2.2	Accordion Partitions										X	X											
			1.2	Operable Partitions										X	X											

SUBMITTAL REGISTER
(ER 415 1-10)

CONTRACT NO.

TITLE AND LOCATION
CLOSE COMBAT TACTICAL TRAINER (CCTT), FT. LEWIS, WA

CONTRACTOR

SPECIFICATION SECTION
08520

ACTIVITY NO. a.	TRANS-MITTAL NO. b.	ITEM NO c.	SPECIFICATION PARAGRAPH NUMBER d.	DESCRIPTION OF ITEM SUBMITTED e.	TYPE OF SUBMITTAL: DATA f.	DRAWINGS g.	INSTRUCTIONS h.	SCHEDULES i.	STATEMENTS j.	REPORTS k.	CERTIFICATES l.	SAMPLES m.	RECORDS n.	O&M MANUALS o.	CLASSIFICATION: INFORMATION ONLY p.	GOVERNMENT APPROVED q.	REVIEWER r.	CONTRACTOR SCHEDULE DATES: SUBMIT s.	APPROVAL NEEDED BY t.	MATERIAL NEEDED BY u.	CONTRACTOR ACTION: CODE v.	DATE w.	SUBMIT TO GOVERN-MENT x.	GOVERNMENT ACTION: CODE y.	DATE z.	REMARKS aa.
			1.3	Aluminum Windows	X										X											
			1.3	Aluminum Windows		X									X											
			1.3	Aluminum Windows			X								X											
			1.3	Aluminum Windows						X					X											
			1.3	Aluminum Windows							X				X											
			1.3	Aluminum Windows								X			X											

SUBMITTAL REGISTER
(ER 415 1-10)

CONTRACT NO.

TITLE AND LOCATION
CLOSE COMBAT TACTICAL TRAINER (CCTT), FT. LEWIS, WA

CONTRACTOR

SPECIFICATION SECTION
08700

ACTIVITY NO. a.	TRANS-MITTAL NO. b.	ITEM NO c.	SPECIFICATION PARAGRAPH NUMBER d.	DESCRIPTION OF ITEM SUBMITTED e.	TYPE OF SUBMITTAL: DATA f.	DRAWINGS g.	INSTRUCTIONS h.	SCHEDULES i.	STATEMENTS j.	REPORTS k.	CERTIFICATES l.	SAMPLES m.	RECORDS n.	O&M MANUALS o.	CLASSIFICATION: INFORMATION ONLY p.	GOVERNMENT APPROVED q.	REVIEWER r.	CONTRACTOR SCHEDULE DATES: SUBMIT s.	APPROVAL NEEDED BY t.	MATERIAL NEEDED BY u.	CONTRACTOR ACTION: CODE v.	DATE w.	SUBMIT TO GOVERN-MENT x.	GOVERNMENT ACTION: CODE y.	DATE z.	REMARKS aa.
			1.2	Hardware and Accessories	X										X											
			1.2	Hardware Schedule				X																		
			1.2	Keying Schedule				X								X										
			1.2	Hardware and Accessories							X				X											

SUBMITTAL REGISTER
(ER 415 1-10)

CONTRACT NO.

TITLE AND LOCATION
CLOSE COMBAT TACTICAL TRAINER (CCTT), FT. LEWIS, WA

CONTRACTOR

SPECIFICATION SECTION
08810

ACTIVITY NO. a.	TRANS-MITTAL NO. b.	ITEM NO c.	SPECIFICATION PARAGRAPH NUMBER d.	DESCRIPTION OF ITEM SUBMITTED e.	TYPE OF SUBMITTAL: DATA f.	DRAWINGS g.	INSTRUCTIONS h.	SCHEDULES i.	STATEMENTS j.	REPORTS k.	CERTIFICATES l.	SAMPLES m.	RECORDS n.	O&M MANUALS o.	CLASSIFICATION: INFORMATION ONLY p.	GOVERNMENT APPROVED q.	REVIEWER r.	CONTRACTOR SCHEDULE DATES: SUBMIT s.	APPROVAL NEEDED BY t.	MATERIAL NEEDED BY u.	CONTRACTOR ACTION: CODE v.	DATE w.	SUBMIT TO GOVERN-MENT x.	GOVERNMENT ACTION: CODE y.	DATE z.	REMARKS aa.
			1.2	Glass	X										X											
			1.2	Glazing Accessories	X										X											
			1.2	Glazing Materials and Accessories		X									X											
			1.2	Glass							X				X											
			1.2	Glass								X			X											

SUBMITTAL REGISTER
(ER 415 1-10)

CONTRACT NO.

TITLE AND LOCATION
CLOSE COMBAT TACTICAL TRAINER (CCTT), FT. LEWIS, WA

CONTRACTOR

SPECIFICATION SECTION
09250

ACTIVITY NO. a.	TRANS-MITTAL NO. b.	ITEM NO c.	SPECIFICATION PARAGRAPH NUMBER d.	DESCRIPTION OF ITEM SUBMITTED e.	TYPE OF SUBMITTAL: DATA f.	DRAWINGS g.	INSTRUCTIONS h.	SCHEDULES i.	STATEMENTS j.	REPORTS k.	CERTIFICATES l.	SAMPLES m.	RECORDS n.	O&M MANUALS o.	CLASSIFICATION: INFORMATION ONLY p.	GOVERNMENT APPROVED q.	REVIEWER r.	CONTRACTOR SCHEDULE DATES: SUBMIT s.	APPROVAL NEEDED BY t.	MATERIAL NEEDED BY u.	CONTRACTOR ACTION: CODE v.	DATE w.	SUBMIT TO GOVERN-MENT x.	GOVERNMENT ACTION: CODE y.	DATE z.	REMARKS aa.
			1.3	Steel Framing		X									X											
			1.3	Control Joints		X									X											
			3.6	Fire-Resistant Assemblies		X									X											
			1.3	Gypsum Wallboard							X				X											
			1.3	Steel Framing							X				X											
			2.3.2	Fire-Rated Gypsum Board							X				X											

SUBMITTAL REGISTER
(ER 415 1-10)

CONTRACT NO.

TITLE AND LOCATION
CLOSE COMBAT TACTICAL TRAINER (CCTT), FT. LEWIS, WA

CONTRACTOR

SPECIFICATION SECTION
09310

ACTIVITY NO. a.	TRANS-MITTAL NO. b.	ITEM NO c.	SPECIFICATION PARAGRAPH NUMBER d.	DESCRIPTION OF ITEM SUBMITTED e.	TYPE OF SUBMITTAL: DATA f.	DRAWINGS g.	INSTRUCTIONS h.	SCHEDULES i.	STATEMENTS j.	REPORTS k.	CERTIFICATES l.	SAMPLES m.	RECORDS n.	O&M MANUALS o.	CLASSIFICATION: INFORMATION ONLY p.	GOVERNMENT APPROVED q.	REVIEWER r.	CONTRACTOR SCHEDULE DATES: SUBMIT s.	APPROVAL NEEDED BY t.	MATERIAL NEEDED BY u.	CONTRACTOR ACTION: CODE v.	DATE w.	SUBMIT TO GOVERN-MENT x.	GOVERNMENT ACTION: CODE y.	DATE z.	REMARKS aa.
			2.1	Tile	X										X											
			1.2	Setting-Bed	X										X											
			2.3	Mortar, Grout, and Adhesive	X										X											
			2.1	Tile			X								X											
			1.2	Mortar and Grout			X								X											
			1.2	Testing						X					X											
			2.1	Tile							X				X											
			2.3	Mortar, Grout, and Adhesive							X				X											
			2.1	Tile								X			X											
			1.2	Accent Strips								X			X											
			2.4	Marble Thresholds								X			X											

SUBMITTAL REGISTER
(ER 415 1-10)

CONTRACT NO.

TITLE AND LOCATION
CLOSE COMBAT TACTICAL TRAINER (CCTT), FT. LEWIS, WA

CONTRACTOR

SPECIFICATION SECTION
09510

ACTIVITY NO. a.	TRANS-MITTAL NO. b.	ITEM NO c.	SPECIFICATION PARAGRAPH NUMBER d.	DESCRIPTION OF ITEM SUBMITTED e.	TYPE OF SUBMITTAL: DATA f.	DRAWINGS g.	INSTRUCTIONS h.	SCHEDULES i.	STATEMENTS j.	REPORTS k.	CERTIFICATES l.	SAMPLES m.	RECORDS n.	O&M MANUALS o.	CLASSIFICATION: INFORMATION ONLY p.	GOVERNMENT APPROVED q.	REVIEWER r.	CONTRACTOR SCHEDULE DATES: SUBMIT s.	APPROVAL NEEDED BY t.	MATERIAL NEEDED BY u.	CONTRACTOR ACTION: CODE v.	DATE w.	SUBMIT TO GOVERN-MENT x.	GOVERNMENT ACTION: CODE y.	DATE z.	REMARKS aa.
			1.3	Acoustical Ceiling System	X										X											
			1.3	Acoustical Ceiling System		X									X											
			2.1	Acoustical Units							X				X											
			2.1	Acoustical Units								X			X											

SUBMITTAL REGISTER
(ER 415 1-10)

CONTRACT NO.

TITLE AND LOCATION
CLOSE COMBAT TACTICAL TRAINER (CCTT), FT. LEWIS, WA

CONTRACTOR

SPECIFICATION SECTION
09650

ACTIVITY NO. a.	TRANS-MITTAL NO. b.	ITEM NO c.	SPECIFICATION PARAGRAPH NUMBER d.	DESCRIPTION OF ITEM SUBMITTED e.	TYPE OF SUBMITTAL: DATA f.	DRAWINGS g.	INSTRUCTIONS h.	SCHEDULES i.	STATEMENTS j.	REPORTS k.	CERTIFICATES l.	SAMPLES m.	RECORDS n.	O&M MANUALS o.	CLASSIFICATION: INFORMATION ONLY p.	GOVERNMENT APPROVED q.	REVIEWER r.	CONTRACTOR SCHEDULE DATES: SUBMIT s.	APPROVAL NEEDED BY t.	MATERIAL NEEDED BY u.	CONTRACTOR ACTION: CODE v.	DATE w.	SUBMIT TO GOVERN-MENT x.	GOVERNMENT ACTION: CODE y.	DATE z.	REMARKS aa.
			1.3	Resilient Flooring and Accessories	X										X											
			1.3	Resilient Flooring and Accessories						X					X											
			1.3	Resilient Flooring and Accessories								X			X											

SUBMITTAL REGISTER
(ER 415 1-10)

CONTRACT NO.

TITLE AND LOCATION
CLOSE COMBAT TACTICAL TRAINER (CCTT), FT. LEWIS, WA

CONTRACTOR

SPECIFICATION SECTION
09680

ACTIVITY NO. a.	TRANS-MITTAL NO. b.	ITEM NO c.	SPECIFICATION PARAGRAPH NUMBER d.	DESCRIPTION OF ITEM SUBMITTED e.	TYPE OF SUBMITTAL: DATA f.	DRAWINGS g.	INSTRUCTIONS h.	SCHEDULES i.	STATEMENTS j.	REPORTS k.	CERTIFICATES l.	SAMPLES m.	RECORDS n.	O&M MANUALS o.	CLASSIFICATION: INFORMATION ONLY p.	GOVERNMENT APPROVED q.	REVIEWER r.	CONTRACTOR SCHEDULE DATES: SUBMIT s.	APPROVAL NEEDED BY t.	MATERIAL NEEDED BY u.	CONTRACTOR ACTION: CODE v.	DATE w.	SUBMIT TO GOVERN-MENT x.	GOVERNMENT ACTION: CODE y.	DATE z.	REMARKS aa.
			1.2	Carpet and Accessories	X										X											
			3.4	Installation		X									X											
			1.2	Carpet and Accessories			X								X											
			1.2	Moisture and Alkalinity Tests						X					X											
			1.2	Carpet and Accessories							X				X											
			1.2	Carpet and Accessories								X			X											
			1.2	Carpet and Accessories										X	X											

SUBMITTAL REGISTER
(ER 415 1-10)

CONTRACT NO.

TITLE AND LOCATION
CLOSE COMBAT TACTICAL TRAINER (CCTT), FT. LEWIS, WA

CONTRACTOR

SPECIFICATION SECTION
09836

ACTIVITY NO. a.	TRANS-MITTAL NO. b.	ITEM NO c.	SPECIFICATION PARAGRAPH NUMBER d.	DESCRIPTION OF ITEM SUBMITTED e.	TYPE OF SUBMITTAL: DATA f.	DRAWINGS g.	INSTRUCTIONS h.	SCHEDULES i.	STATEMENTS j.	REPORTS k.	CERTIFICATES l.	SAMPLES m.	RECORDS n.	O&M MANUALS o.	CLASSIFICATION: INFORMATION ONLY p.	GOVERNMENT APPROVED q.	REVIEWER r.	CONTRACTOR SCHEDULE DATES: SUBMIT s.	APPROVAL NEEDED BY t.	MATERIAL NEEDED BY u.	CONTRACTOR ACTION: CODE v.	DATE w.	SUBMIT TO GOVERN-MENT x.	GOVERNMENT ACTION: CODE y.	DATE z.	REMARKS aa.
			1.2	Application Instructions			X								X											
			1.2	Manufacturer's Material Safety Data			X									X										
				Sheets (MSDS)																						
			1.2	Applicator's qualifications					X						X		FIO									
			1.2	Evidence of acceptable variation					X						X		FIO									
			1.2	Coating							X				X											
			1.2	Multi-color coating								X			X											

SUBMITTAL REGISTER
(ER 415 1-10)

CONTRACT NO.

TITLE AND LOCATION
CLOSE COMBAT TACTICAL TRAINER (CCTT), FT. LEWIS, WA

CONTRACTOR

SPECIFICATION SECTION
09900

ACTIVITY NO. a.	TRANS-MITTAL NO. b.	ITEM NO c.	SPECIFICATION PARAGRAPH NUMBER d.	DESCRIPTION OF ITEM SUBMITTED e.	TYPE OF SUBMITTAL: DATA f.	DRAWINGS g.	INSTRUCTIONS h.	SCHEDULES i.	STATEMENTS j.	REPORTS k.	CERTIFICATES l.	SAMPLES m.	RECORDS n.	O&M MANUALS o.	CLASSIFICATION: INFORMATION ONLY p.	GOVERNMENT APPROVED q.	REVIEWER r.	CONTRACTOR SCHEDULE DATES: SUBMIT s.	APPROVAL NEEDED BY t.	MATERIAL NEEDED BY u.	CONTRACTOR ACTION: CODE v.	DATE w.	SUBMIT TO GOVERN-MENT x.	GOVERNMENT ACTION: CODE y.	DATE z.	REMARKS aa.
			2.1	Paint	X										X											
			3.3	Mixing and Thinning			X								X											
			3.4	Application			X								X											
			2.1	Paint						X					X											
			2.1.3	Lead							X				X											
			2.1.2	Mildewcide and Insecticide							X				X											
			2.1.5	Volatile Organic Compound (VOC)							X				X											
				Content																						
			2.1	Paint								X			X											

SUBMITTAL REGISTER
(ER 415 1-10)

CONTRACT NO.

TITLE AND LOCATION
CLOSE COMBAT TACTICAL TRAINER (CCTT), FT. LEWIS, WA

CONTRACTOR

SPECIFICATION SECTION
09950

ACTIVITY NO. a.	TRANS-MITTAL NO. b.	ITEM NO c.	SPECIFICATION PARAGRAPH NUMBER d.	DESCRIPTION OF ITEM SUBMITTED e.	TYPE OF SUBMITTAL: DATA f.	DRAWINGS g.	INSTRUCTIONS h.	SCHEDULES i.	STATEMENTS j.	REPORTS k.	CERTIFICATES l.	SAMPLES m.	RECORDS n.	O&M MANUALS o.	CLASSIFICATION: INFORMATION ONLY p.	GOVERNMENT APPROVED q.	REVIEWER r.	CONTRACTOR SCHEDULE DATES: SUBMIT s.	APPROVAL NEEDED BY t.	MATERIAL NEEDED BY u.	CONTRACTOR ACTION: CODE v.	DATE w.	SUBMIT TO GOVERN-MENT x.	GOVERNMENT ACTION: CODE y.	DATE z.	REMARKS aa.
			1.2	Wallcovering and Accessories	X										X											
			3.3	Installation			X								X											
			1.2	Maintenance			X								X											
			1.2	Wallcovering							X				X											
			1.2	Wallcovering and Accessories								X			X											

SUBMITTAL REGISTER
(ER 415 1-10)

CONTRACT NO.

TITLE AND LOCATION
CLOSE COMBAT TACTICAL TRAINER (CCTT), FT. LEWIS, WA

CONTRACTOR

SPECIFICATION SECTION
10100

ACTIVITY NO. a.	TRANS-MITTAL NO. b.	ITEM NO c.	SPECIFICATION PARAGRAPH NUMBER d.	DESCRIPTION OF ITEM SUBMITTED e.	TYPE OF SUBMITTAL: DATA f.	DRAWINGS g.	INSTRUCTIONS h.	SCHEDULES i.	STATEMENTS j.	REPORTS k.	CERTIFICATES l.	SAMPLES m.	RECORDS n.	O&M MANUALS o.	CLASSIFICATION: INFORMATION ONLY p.	GOVERNMENT APPROVED q.	REVIEWER r.	CONTRACTOR SCHEDULE DATES: SUBMIT s.	APPROVAL NEEDED BY t.	MATERIAL NEEDED BY u.	CONTRACTOR ACTION: CODE v.	DATE w.	SUBMIT TO GOVERN-MENT x.	GOVERNMENT ACTION: CODE y.	DATE z.	REMARKS aa.
			1.3	Presentation Units	X										X											
			1.3	Fire Extinguisher Cabinets and Wall	X										X											
				Brackets																						
			1.3	Fire Extinguishers	X										X											
			1.3	Foot Scraper/Brush	X										X											
			1.3	Projection Screen	X										X											
			1.3	Mail Drop	X										X											
			1.3	Presentation Units		X									X											
			1.3	Fire Extinguisher Cabinets and Wall		X									X											
				Brackets																						
			1.3	Foot Scraper/Brush		X									X											
			1.3	Projection Screen		X									X											
			1.3	Presentaton Units								X			X											
			1.3	Projection Screen								X			X											
			1.3	2 Prong Hook								X			X											

SUBMITTAL REGISTER
(ER 415 1-10)

CONTRACT NO.

TITLE AND LOCATION
CLOSE COMBAT TACTICAL TRAINER (CCTT), FT. LEWIS, WA

CONTRACTOR

SPECIFICATION SECTION
10160

ACTIVITY NO. a.	TRANS-MITTAL NO. b.	ITEM NO. c.	SPECIFICATION PARAGRAPH NUMBER d.	DESCRIPTION OF ITEM SUBMITTED e.	TYPE OF SUBMITTAL: DATA f.	DRAWINGS g.	INSTRUCTIONS h.	SCHEDULES i.	STATEMENTS j.	REPORTS k.	CERTIFICATES l.	SAMPLES m.	RECORDS n.	O&M MANUALS o.	CLASSIFICATION: INFORMATION ONLY p.	GOVERNMENT APPROVED q.	REVIEWER r.	CONTRACTOR SCHEDULE DATES: SUBMIT s.	APPROVAL NEEDED BY t.	MATERIAL NEEDED BY u.	CONTRACTOR ACTION: CODE v.	DATE w.	SUBMIT TO GOVERN-MENT x.	GOVERNMENT ACTION: CODE y.	DATE z.	REMARKS aa.
			1.3	Toilet Partition System	X										X											
			1.3	Toilet Partition System		X									X											
			1.3	Toilet Partition System								X			X											

SUBMITTAL REGISTER
(ER 415 1-10)

CONTRACT NO.

TITLE AND LOCATION
CLOSE COMBAT TACTICAL TRAINER (CCTT), FT. LEWIS, WA

CONTRACTOR

SPECIFICATION SECTION
10201

ACTIVITY NO. a.	TRANS-MITTAL NO. b.	ITEM NO c.	SPECIFICATION PARAGRAPH NUMBER d.	DESCRIPTION OF ITEM SUBMITTED e.	TYPE OF SUBMITTAL: DATA f.	DRAWINGS g.	INSTRUCTIONS h.	SCHEDULES i.	STATEMENTS j.	REPORTS k.	CERTIFICATES l.	SAMPLES m.	RECORDS n.	O&M MANUALS o.	CLASSIFICATION: INFORMATION ONLY p.	GOVERNMENT APPROVED q.	REVIEWER r.	CONTRACTOR SCHEDULE DATES: SUBMIT s.	APPROVAL NEEDED BY t.	MATERIAL NEEDED BY u.	CONTRACTOR ACTION: CODE v.	DATE w.	SUBMIT TO GOVERN-MENT x.	GOVERNMENT ACTION: CODE y.	DATE z.	REMARKS aa.
			2.2	Wall Louvers	X											X										
			2.2	Wall Louvers		X										X										

SUBMITTAL REGISTER
(ER 415 1-10)

CONTRACT NO.

TITLE AND LOCATION
CLOSE COMBAT TACTICAL TRAINER (CCTT), FT. LEWIS, WA

CONTRACTOR

SPECIFICATION SECTION
10430

ACTIVITY NO. a.	TRANS-MITTAL NO. b.	ITEM NO c.	SPECIFICATION PARAGRAPH NUMBER d.	DESCRIPTION OF ITEM SUBMITTED e.	TYPE OF SUBMITTAL: DATA f.	DRAWINGS g.	INSTRUCTIONS h.	SCHEDULES i.	STATEMENTS j.	REPORTS k.	CERTIFICATES l.	SAMPLES m.	RECORDS n.	O&M MANUALS o.	CLASSIFICATION: INFORMATION ONLY p.	GOVERNMENT APPROVED q.	REVIEWER r.	CONTRACTOR SCHEDULE DATES: SUBMIT s.	APPROVAL NEEDED BY t.	MATERIAL NEEDED BY u.	CONTRACTOR ACTION: CODE v.	DATE w.	SUBMIT TO GOVERN-MENT x.	GOVERNMENT ACTION: CODE y.	DATE z.	REMARKS aa.
			1.3	Exterior Signs	X										X											
			1.3	Exterior Signs		X									X											
			1.3	Exterior Signs			X								X											
			1.3	Exterior Signs								X			X											

SUBMITTAL REGISTER
(ER 415 1-10)

CONTRACT NO.

TITLE AND LOCATION
CLOSE COMBAT TACTICAL TRAINER (CCTT), FT. LEWIS, WA

CONTRACTOR

SPECIFICATION SECTION
10440

ACTIVITY NO. a.	TRANS-MITTAL NO. b.	ITEM NO c.	SPECIFICATION PARAGRAPH NUMBER d.	DESCRIPTION OF ITEM SUBMITTED e.	TYPE OF SUBMITTAL: DATA f.	DRAWINGS g.	INSTRUCTIONS h.	SCHEDULES i.	STATEMENTS j.	REPORTS k.	CERTIFICATES l.	SAMPLES m.	RECORDS n.	O&M MANUALS o.	CLASSIFICATION: INFORMATION ONLY p.	GOVERNMENT APPROVED q.	REVIEWER r.	CONTRACTOR SCHEDULE DATES: SUBMIT s.	APPROVAL NEEDED BY t.	MATERIAL NEEDED BY u.	CONTRACTOR ACTION: CODE v.	DATE w.	SUBMIT TO GOVERN-MENT x.	GOVERNMENT ACTION: CODE y.	DATE z.	REMARKS aa.
			1.3	Interior Signage	X										X											
			1.3	Interior Signage		X									X											
			1.3	Interior Signage								X			X											

SUBMITTAL REGISTER
(ER 415 1-10)

CONTRACT NO.

TITLE AND LOCATION
CLOSE COMBAT TACTICAL TRAINER (CCTT), FT. LEWIS, WA

CONTRACTOR

SPECIFICATION SECTION
10800

ACTIVITY NO. a.	TRANS-MITTAL NO. b.	ITEM NO c.	SPECIFICATION PARAGRAPH NUMBER d.	DESCRIPTION OF ITEM SUBMITTED e.	TYPE OF SUBMITTAL: DATA f.	DRAWINGS g.	INSTRUCTIONS h.	SCHEDULES i.	STATEMENTS j.	REPORTS k.	CERTIFICATES l.	SAMPLES m.	RECORDS n.	O&M MANUALS o.	CLASSIFICATION: INFORMATION ONLY p.	GOVERNMENT APPROVED q.	REVIEWER r.	CONTRACTOR SCHEDULE DATES: SUBMIT s.	APPROVAL NEEDED BY t.	MATERIAL NEEDED BY u.	CONTRACTOR ACTION: CODE v.	DATE w.	SUBMIT TO GOVERN-MENT x.	GOVERNMENT ACTION: CODE y.	DATE z.	REMARKS aa.
			2.1.2	Finishes	X										X											
			2.2	Accessory Items	X										X											
			2.1.2	Finishes								X			X											
			2.2	Accessory Items								X			X											

SUBMITTAL REGISTER
(ER 415 1-10)

CONTRACT NO.

TITLE AND LOCATION
CLOSE COMBAT TACTICAL TRAINER (CCTT), FT. LEWIS, WA

CONTRACTOR

SPECIFICATION SECTION
12520

ACTIVITY NO. a.	TRANS-MITTAL NO. b.	ITEM NO c.	SPECIFICATION PARAGRAPH NUMBER d.	DESCRIPTION OF ITEM SUBMITTED e.	TYPE OF SUBMITTAL: DATA f.	DRAWINGS g.	INSTRUCTIONS h.	SCHEDULES i.	STATEMENTS j.	REPORTS k.	CERTIFICATES l.	SAMPLES m.	RECORDS n.	O&M MANUALS o.	CLASSIFICATION: INFORMATION ONLY p.	GOVERNMENT APPROVED q.	REVIEWER r.	CONTRACTOR SCHEDULE DATES: SUBMIT s.	APPROVAL NEEDED BY t.	MATERIAL NEEDED BY u.	CONTRACTOR ACTION: CODE v.	DATE w.	SUBMIT TO GOVERN-MENT x.	GOVERNMENT ACTION: CODE y.	DATE z.	REMARKS aa.
			1.3	Window Treatments and Hardware	X										X											
			1.3	Window Treatments and Hardware		X									X											
			1.3	Window Treatments and Hardware								X			X											

SUBMITTAL REGISTER
(ER 415 1-10)

CONTRACT NO.

TITLE AND LOCATION
CLOSE COMBAT TACTICAL TRAINER (CCTT), FT. LEWIS, WA

CONTRACTOR

SPECIFICATION SECTION
12690

ACTIVITY NO. a.	TRANS-MITTAL NO. b.	ITEM NO c.	SPECIFICATION PARAGRAPH NUMBER d.	DESCRIPTION OF ITEM SUBMITTED e.	TYPE OF SUBMITTAL: DATA f.	DRAWINGS g.	INSTRUCTIONS h.	SCHEDULES i.	STATEMENTS j.	REPORTS k.	CERTIFICATES l.	SAMPLES m.	RECORDS n.	O&M MANUALS o.	CLASSIFICATION: INFORMATION ONLY p.	GOVERNMENT APPROVED q.	REVIEWER r.	CONTRACTOR SCHEDULE DATES: SUBMIT s.	APPROVAL NEEDED BY t.	MATERIAL NEEDED BY u.	CONTRACTOR ACTION: CODE v.	DATE w.	SUBMIT TO GOVERN-MENT x.	GOVERNMENT ACTION: CODE y.	DATE z.	REMARKS aa.
			1.1	Entry Mats	X										X											
			1.1	Entry Mats and Frames		X									X											
			1.1	Entry Mats								X			X											

SUBMITTAL REGISTER
(ER 415 1-10)

CONTRACT NO.

TITLE AND LOCATION
CLOSE COMBAT TACTICAL TRAINER (CCTT), FT. LEWIS, WA

CONTRACTOR

SPECIFICATION SECTION
13083

ACTIVITY NO. a.	TRANS-MITTAL NO. b.	ITEM NO c.	SPECIFICATION PARAGRAPH NUMBER d.	DESCRIPTION OF ITEM SUBMITTED e.	TYPE OF SUBMITTAL: DATA f.	DRAWINGS g.	INSTRUCTIONS h.	SCHEDULES i.	STATEMENTS j.	REPORTS k.	CERTIFICATES l.	SAMPLES m.	RECORDS n.	O&M MANUALS o.	CLASSIFICATION: INFORMATION ONLY p.	GOVERNMENT APPROVED q.	REVIEWER r.	CONTRACTOR SCHEDULE DATES: SUBMIT s.	APPROVAL NEEDED BY t.	MATERIAL NEEDED BY u.	CONTRACTOR ACTION: CODE v.	DATE w.	SUBMIT TO GOVERN-MENT x.	GOVERNMENT ACTION: CODE y.	DATE z.	REMARKS aa.
			1.3	Bracing and Coupling	X											X										
			1.3	Lighting Fixtures in Buildings	X											X										
			1.3	Miscellaneous Equipment	X											X										
			1.3	Bracing and Coupling		X										X										
			1.3	Flexible Couplings or Joints		X										X										
			1.3	Resilient Vibration Isolation Devices		X										X										
			1.3	Lighting Fixtures in Buildings		X										X										
			1.3	Miscellaneous Equipment		X										X										
			1.3	Flexible Ball Joints							X					X										

SUBMITTAL REGISTER
(ER 415 1-10)

CONTRACT NO.

TITLE AND LOCATION
CLOSE COMBAT TACTICAL TRAINER (CCTT), FT. LEWIS, WA

CONTRACTOR

SPECIFICATION SECTION
15250

ACTIVITY NO. a.	TRANS-MITTAL NO. b.	ITEM NO c.	SPECIFICATION PARAGRAPH NUMBER d.	DESCRIPTION OF ITEM SUBMITTED e.	TYPE OF SUBMITTAL: DATA f.	DRAWINGS g.	INSTRUCTIONS h.	SCHEDULES i.	STATEMENTS j.	REPORTS k.	CERTIFICATES l.	SAMPLES m.	RECORDS n.	O&M MANUALS o.	CLASSIFICATION: INFORMATION ONLY p.	GOVERNMENT APPROVED q.	REVIEWER r.	CONTRACTOR SCHEDULE DATES: SUBMIT s.	APPROVAL NEEDED BY t.	MATERIAL NEEDED BY u.	CONTRACTOR ACTION: CODE v.	DATE w.	SUBMIT TO GOVERN-MENT x.	GOVERNMENT ACTION: CODE y.	DATE z.	REMARKS aa.
			1.4	Thermal Insulation Materials								X			X											

SUBMITTAL REGISTER
(ER 415 1-10)

CONTRACT NO.

TITLE AND LOCATION
CLOSE COMBAT TACTICAL TRAINER (CCTT), FT. LEWIS, WA

CONTRACTOR

SPECIFICATION SECTION
15330

ACTIVITY NO. a.	TRANS-MITTAL NO. b.	ITEM NO. c.	SPECIFICATION PARAGRAPH NUMBER d.	DESCRIPTION OF ITEM SUBMITTED e.	TYPE OF SUBMITTAL: DATA f.	DRAWINGS g.	INSTRUCTIONS h.	SCHEDULES i.	STATEMENTS j.	REPORTS k.	CERTIFICATES l.	SAMPLES m.	RECORDS n.	O&M MANUALS o.	CLASSIFICATION: INFORMATION ONLY p.	GOVERNMENT APPROVED q.	REVIEWER r.	CONTRACTOR SCHEDULE DATES: SUBMIT s.	APPROVAL NEEDED BY t.	MATERIAL NEEDED BY u.	CONTRACTOR ACTION: CODE v.	DATE w.	SUBMIT TO GOVERN-MENT x.	GOVERNMENT ACTION: CODE y.	DATE z.	REMARKS aa.
			1.3	Load Calculations for Sizing Sway	X											X										
				Bracing																						
			1.3	Sprinkler System Equipment	X											X										
			1.4	Hydraulic Calculations	X											X										
			1.3	Spare Parts	X										X											
			1.3	Sprinkler System Shop Drawings		X										X										
			1.3	As-Built Drawings		X										X										
			1.3	Test Procedures			X									X										
			1.3	Preliminary Tests				X								X										
			1.3	Final Test				X								X										
			1.6	Installer Qualifications					X							X										
			1.5	Submittal Preparer's Qualifications					X							X										
			1.3	Contractor's Material & Test							X					X										
				Certificates																						
			1.3	Sprinkler System										X		X										

SUBMITTAL REGISTER
(ER 415 1-10)

CONTRACT NO.

TITLE AND LOCATION
CLOSE COMBAT TACTICAL TRAINER (CCTT), FT. LEWIS, WA

CONTRACTOR

SPECIFICATION SECTION
15332

ACTIVITY NO. a.	TRANS-MITTAL NO. b.	ITEM NO c.	SPECIFICATION PARAGRAPH NUMBER d.	DESCRIPTION OF ITEM SUBMITTED e.	TYPE OF SUBMITTAL: DATA f.	DRAWINGS g.	INSTRUCTIONS h.	SCHEDULES i.	STATEMENTS j.	REPORTS k.	CERTIFICATES l.	SAMPLES m.	RECORDS n.	O&M MANUALS o.	CLASSIFICATION: INFORMATION ONLY p.	GOVERNMENT APPROVED q.	REVIEWER r.	CONTRACTOR SCHEDULE DATES: SUBMIT s.	APPROVAL NEEDED BY t.	MATERIAL NEEDED BY u.	CONTRACTOR ACTION: CODE v.	DATE w.	SUBMIT TO GOVERN-MENT x.	GOVERNMENT ACTION: CODE y.	DATE z.	REMARKS aa.
			1.4	Load Calculations for Sizing Sway	X											X										
				Bracing																						
			1.4	Sprinkler System Equipment	X											X										
			1.5	Hydraulic Calculations	X											X										
			1.4	Spare Parts	X										X											
			1.4	Sprinkler System Shop Drawings		X										X										
			1.4	As-Built Drawings		X										X										
			1.4	Test Procedures			X									X										
			1.4	Preliminary Tests				X								X										
			1.4	Final Test				X								X										
			1.7	Installer Qualifications					X							X										
			1.6	Submittal Preparer's Qualifications					X							X										
			1.4	Contractor's Material & Test							X					X										
				Certificates																						
			1.4	Sprinkler System										X		X										

SUBMITTAL REGISTER
(ER 415 1-10)

CONTRACT NO.

TITLE AND LOCATION
CLOSE COMBAT TACTICAL TRAINER (CCTT), FT. LEWIS, WA

CONTRACTOR

SPECIFICATION SECTION
15400

ACTIVITY NO. a.	TRANS-MITTAL NO. b.	ITEM NO c.	SPECIFICATION PARAGRAPH NUMBER d.	DESCRIPTION OF ITEM SUBMITTED e.	TYPE OF SUBMITTAL: DATA f.	DRAWINGS g.	INSTRUCTIONS h.	SCHEDULES i.	STATEMENTS j.	REPORTS k.	CERTIFICATES l.	SAMPLES m.	RECORDS n.	O&M MANUALS o.	CLASSIFICATION: INFORMATION ONLY p.	GOVERNMENT APPROVED q.	REVIEWER r.	CONTRACTOR SCHEDULE DATES: SUBMIT s.	APPROVAL NEEDED BY t.	MATERIAL NEEDED BY u.	CONTRACTOR ACTION: CODE v.	DATE w.	SUBMIT TO GOVERN-MENT x.	GOVERNMENT ACTION: CODE y.	DATE z.	REMARKS aa.
			1.5	Welding	X										X											
			3.4	Vibration-Absorbing Features	X										X											
			1.5	Plumbing System		X									X											
			1.5	Electrical Schematics		X									X											
			1.5	Plumbing System			X								X											
			3.8	Tests, Flushing and Sterilization						X					X											
			1.5	Backflow Prevention Assembly Tests						X					X											
			1.5	Materials and Equipment							X				X											
			1.5	Bolts							X				X											
			1.5	Plumbing System										X	X											

SUBMITTAL REGISTER
(ER 415 1-10)

CONTRACT NO.

TITLE AND LOCATION
CLOSE COMBAT TACTICAL TRAINER (CCTT), FT. LEWIS, WA

CONTRACTOR

SPECIFICATION SECTION
15569

ACTIVITY NO. a.	TRANS-MITTAL NO. b.	ITEM NO c.	SPECIFICATION PARAGRAPH NUMBER d.	DESCRIPTION OF ITEM SUBMITTED e.	TYPE OF SUBMITTAL: DATA f.	DRAWINGS g.	INSTRUCTIONS h.	SCHEDULES i.	STATEMENTS j.	REPORTS k.	CERTIFICATES l.	SAMPLES m.	RECORDS n.	O&M MANUALS o.	CLASSIFICATION: INFORMATION ONLY p.	GOVERNMENT APPROVED q.	REVIEWER r.	CONTRACTOR SCHEDULE DATES: SUBMIT s.	APPROVAL NEEDED BY t.	MATERIAL NEEDED BY u.	CONTRACTOR ACTION: CODE v.	DATE w.	SUBMIT TO GOVERN-MENT x.	GOVERNMENT ACTION: CODE y.	DATE z.	REMARKS aa.
			1.3	Manufacturer's Catalog Data	X										X		GA									
			1.3	Spare Parts Data	X										X											
			1.3	Water Treatment Plan	X										X											
			1.3	Heating and Fuel Systems Test	X										X											
				Procedures																						
			1.3	Welding Procedures	X										X											
			1.3	Qualification	X										X											
			1.3	Welding Qualification	X										X											
			1.3	Heating System		X									X											
			1.3	Posted Instructions			X									X										
			1.3	Tests				X							X											
			1.3	Heating System and Fuel System						X					X											
				Tests																						
			1.3	Water Treatment Tests						X					X											
			1.3	Bolts							X				X											
			1.3	Boiler Emissions							X				X											
			1.3	Heating System										X	X											
			1.3	Water Treatment System										X	X											

SUBMITTAL REGISTER
(ER 415 1-10)

CONTRACT NO.

TITLE AND LOCATION
CLOSE COMBAT TACTICAL TRAINER (CCTT), FT. LEWIS, WA

CONTRACTOR

SPECIFICATION SECTION
15650

ACTIVITY NO. a.	TRANS-MITTAL NO. b.	ITEM NO. c.	SPECIFICATION PARAGRAPH NUMBER d.	DESCRIPTION OF ITEM SUBMITTED e.	TYPE OF SUBMITTAL: DATA f.	DRAWINGS g.	INSTRUCTIONS h.	SCHEDULES i.	STATEMENTS j.	REPORTS k.	CERTIFICATES l.	SAMPLES m.	RECORDS n.	O&M MANUALS o.	CLASSIFICATION: INFORMATION ONLY p.	GOVERNMENT APPROVED q.	REVIEWER r.	CONTRACTOR SCHEDULE DATES: SUBMIT s.	APPROVAL NEEDED BY t.	MATERIAL NEEDED BY u.	CONTRACTOR ACTION: CODE v.	DATE w.	SUBMIT TO GOVERN-MENT x.	GOVERNMENT ACTION: CODE y.	DATE z.	REMARKS aa.
			1.3	Central Refrigerated Air-Conditioning	X										X		GA									
				System																						
			2.7	Water Treatment Systems	X											X										
			1.3	Spare Parts	X										X											
			1.4	Qualifications	X										X											
			1.3	Central Refrigerated Air-Conditioning		X										X										
				System																						
			1.3	Posted Instructions			X								X											
			2.10	Factory Tests				X							X											
			3.2	Tests				X							X											
			3.5	Demonstrations				X								X										
			1.7.1	Verification of Dimensions					X						X											
			2.10	Factory Tests						X					X											
			3.2.1	Field Tests						X					X											
			3.2.2	System Performance Tests						X					X											
			1.3	Inspections						X					X											
			1.3	Central Refrigerated Air-Conditioning							X				X											
				System																						
			1.3	Operation Manual										X	X											
			1.3	Maintenance Manual										X	X											
			1.3	Water Treatment System										X	X											

SUBMITTAL REGISTER
(ER 415 1-10)

CONTRACT NO.

TITLE AND LOCATION
CLOSE COMBAT TACTICAL TRAINER (CCTT), FT. LEWIS, WA

CONTRACTOR

SPECIFICATION SECTION
15651

ACTIVITY NO. a.	TRANS-MITTAL NO. b.	ITEM NO c.	SPECIFICATION PARAGRAPH NUMBER d.	DESCRIPTION OF ITEM SUBMITTED e.	TYPE OF SUBMITTAL: DATA f.	DRAWINGS g.	INSTRUCTIONS h.	SCHEDULES i.	STATEMENTS j.	REPORTS k.	CERTIFICATES l.	SAMPLES m.	RECORDS n.	O&M MANUALS o.	CLASSIFICATION: INFORMATION ONLY p.	GOVERNMENT APPROVED q.	REVIEWER r.	CONTRACTOR SCHEDULE DATES: SUBMIT s.	APPROVAL NEEDED BY t.	MATERIAL NEEDED BY u.	CONTRACTOR ACTION: CODE v.	DATE w.	SUBMIT TO GOVERN-MENT x.	GOVERNMENT ACTION: CODE y.	DATE z.	REMARKS aa.
			1.3	Distribution System	X											X										
			1.3	Distribution System		X									X											
			1.3	Distribution System							X				X											
			1.3	Welding Procedures and Operators							X				X											
			1.3	Distribution System										X		X										

SUBMITTAL REGISTER
(ER 415 1-10)

CONTRACT NO.

TITLE AND LOCATION
CLOSE COMBAT TACTICAL TRAINER (CCTT), FT. LEWIS, WA

CONTRACTOR

SPECIFICATION SECTION
15895

ACTIVITY NO. a.	TRANS-MITTAL NO. b.	ITEM NO. c.	SPECIFICATION PARAGRAPH NUMBER d.	DESCRIPTION OF ITEM SUBMITTED e.	TYPE OF SUBMITTAL: DATA f.	DRAWINGS g.	INSTRUCTIONS h.	SCHEDULES i.	STATEMENTS j.	REPORTS k.	CERTIFICATES l.	SAMPLES m.	RECORDS n.	O&M MANUALS o.	CLASSIFICATION: INFORMATION ONLY p.	GOVERNMENT APPROVED q.	REVIEWER r.	CONTRACTOR SCHEDULE DATES: SUBMIT s.	APPROVAL NEEDED BY t.	MATERIAL NEEDED BY u.	CONTRACTOR ACTION: CODE v.	DATE w.	SUBMIT TO GOVERN-MENT x.	GOVERNMENT ACTION: CODE y.	DATE z.	REMARKS aa.
			1.4	Components and Equipment Data	X																					
			1.4	Piping Components	X										X											
			1.4	Ductwork Components	X										X											
			1.4	Air Systems Equipment	X										X											
			1.4	Air Handling Units	X											X										
			1.4	Terminal Units	X										X											
			1.4	Air Supply, Distribution, Ventilation,		X									X											
				and Exhaust Equipment																						
			1.4	Test Procedures			X								X											
			1.4	Welding Procedures			X								X											
			1.4	System Diagrams			X									X										
			1.4	Test Schedules				X							X											
			1.4	Field Training Schedule				X							X											
			1.4	Similar Services					X						X											
			1.4	Welding Qualification					X						X											
			1.4	Test Reports						X					X											
			1.4	Bolts							X				X											
			1.4	Air Supply, Distribution, Ventilation,										X	X											
				and Exhaust Manuals																						

SUBMITTAL REGISTER
(ER 415 1-10)

CONTRACT NO.

TITLE AND LOCATION
CLOSE COMBAT TACTICAL TRAINER (CCTT), FT. LEWIS, WA

CONTRACTOR

SPECIFICATION SECTION
15950

ACTIVITY NO. a.	TRANS-MITTAL NO. b.	ITEM NO c.	SPECIFICATION PARAGRAPH NUMBER d.	DESCRIPTION OF ITEM SUBMITTED e.	TYPE OF SUBMITTAL: DATA f.	DRAWINGS g.	INSTRUCTIONS h.	SCHEDULES i.	STATEMENTS j.	REPORTS k.	CERTIFICATES l.	SAMPLES m.	RECORDS n.	O&M MANUALS o.	CLASSIFICATION: INFORMATION ONLY p.	GOVERNMENT APPROVED q.	REVIEWER r.	CONTRACTOR SCHEDULE DATES: SUBMIT s.	APPROVAL NEEDED BY t.	MATERIAL NEEDED BY u.	CONTRACTOR ACTION: CODE v.	DATE w.	SUBMIT TO GOVERN-MENT x.	GOVERNMENT ACTION: CODE y.	DATE z.	REMARKS aa.
			1.3	Equipment Compliance Booklet	X											X										
			1.3	HVAC Control System		X										X										
			1.3	Commissioning Procedures					X						X											
			1.3	Performance Verification Test					X						X											
				Procedures																						
			1.3	Training Course Materials					X						X											
			1.3	Commissioning Report						X					X											
			1.3	Performance Verification Test Report						X					X											
			1.3	ASME Air-Storage Tank Certificate							X				X											
			1.3	Service Organizations									X		X											
			1.3	Operation Manual										X	X											
			1.3	Maintenance and Repair Manual										X	X											

SUBMITTAL REGISTER
(ER 415 1-10)

CONTRACT NO.

TITLE AND LOCATION
CLOSE COMBAT TACTICAL TRAINER (CCTT), FT. LEWIS, WA

CONTRACTOR

SPECIFICATION SECTION
15990

ACTIVITY NO. a.	TRANS-MITTAL NO. b.	ITEM NO. c.	SPECIFICATION PARAGRAPH NUMBER d.	DESCRIPTION OF ITEM SUBMITTED e.	TYPE OF SUBMITTAL: DATA f.	DRAWINGS g.	INSTRUCTIONS h.	SCHEDULES i.	STATEMENTS j.	REPORTS k.	CERTIFICATES l.	SAMPLES m.	RECORDS n.	O&M MANUALS o.	CLASSIFICATION: INFORMATION ONLY p.	GOVERNMENT APPROVED q.	REVIEWER r.	CONTRACTOR SCHEDULE DATES: SUBMIT s.	APPROVAL NEEDED BY t.	MATERIAL NEEDED BY u.	CONTRACTOR ACTION: CODE v.	DATE w.	SUBMIT TO GOVERN-MENT x.	GOVERNMENT ACTION: CODE y.	DATE z.	REMARKS aa.
			1.2	TAB Related HVAC Submittals	X										X											
			1.2	TAB Schematic Drawings and Report		X										X										
				Forms																						
			1.2	TAB Procedures			X									X										
			1.2	Systems Readiness Check				X							X											
			1.2	TAB Execution				X								X										
			1.2	TAB Verification				X								X										
			1.2	TAB Firm					X							X										
			1.2	TAB Specialist					X							X										
			1.2	Instrument Calibration					X						X											
			1.2	Design Review Report						X						X										
			1.2	Systems Readiness Check Report						X						X										
			1.2	TAB Report						X						X										
			1.2	TAB Verification Report						X						X										
			1.2	Ductwork Leak Testing							X				X											

SUBMITTAL REGISTER
(ER 415 1-10)

CONTRACT NO.

TITLE AND LOCATION
CLOSE COMBAT TACTICAL TRAINER (CCTT), FT. LEWIS, WA

CONTRACTOR

SPECIFICATION SECTION
15995

ACTIVITY NO. a.	TRANS-MITTAL NO. b.	ITEM NO c.	SPECIFICATION PARAGRAPH NUMBER d.	DESCRIPTION OF ITEM SUBMITTED e.	TYPE OF SUBMITTAL: DATA f.	DRAWINGS g.	INSTRUCTIONS h.	SCHEDULES i.	STATEMENTS j.	REPORTS k.	CERTIFICATES l.	SAMPLES m.	RECORDS n.	O&M MANUALS o.	CLASSIFICATION: INFORMATION ONLY p.	GOVERNMENT APPROVED q.	REVIEWER r.	CONTRACTOR SCHEDULE DATES: SUBMIT s.	APPROVAL NEEDED BY t.	MATERIAL NEEDED BY u.	CONTRACTOR ACTION: CODE v.	DATE w.	SUBMIT TO GOVERN-MENT x.	GOVERNMENT ACTION: CODE y.	DATE z.	REMARKS aa.
			1.1	Commissioning Team	X											X										
			1.1	Test Procedures			X									X										
			1.1	Test Schedule				X								X										
			1.1	Test Reports						X						X										

SUBMITTAL REGISTER
(ER 415 1-10)

CONTRACT NO.

TITLE AND LOCATION
CLOSE COMBAT TACTICAL TRAINER (CCTT), FT. LEWIS, WA

CONTRACTOR

SPECIFICATION SECTION
16370

ACTIVITY NO. a.	TRANS-MITTAL NO. b.	ITEM NO c.	SPECIFICATION PARAGRAPH NUMBER d.	DESCRIPTION OF ITEM SUBMITTED e.	TYPE OF SUBMITTAL: DATA f.	DRAWINGS g.	INSTRUCTIONS h.	SCHEDULES i.	STATEMENTS j.	REPORTS k.	CERTIFICATES l.	SAMPLES m.	RECORDS n.	O&M MANUALS o.	CLASSIFICATION: INFORMATION ONLY p.	GOVERNMENT APPROVED q.	REVIEWER r.	CONTRACTOR SCHEDULE DATES: SUBMIT s.	APPROVAL NEEDED BY t.	MATERIAL NEEDED BY u.	CONTRACTOR ACTION: CODE v.	DATE w.	SUBMIT TO GOVERN-MENT x.	GOVERNMENT ACTION: CODE y.	DATE z.	REMARKS aa.
			1.3	Manufacturer's Catalog	X										X											
			1.3	Material, Equipment, and Fixture	X										X											
				Lists																						
			1.3	Installation Procedures	X										X											

SUBMITTAL REGISTER
(ER 415 1-10)

CONTRACT NO.

TITLE AND LOCATION
CLOSE COMBAT TACTICAL TRAINER (CCTT), FT. LEWIS, WA

CONTRACTOR

SPECIFICATION SECTION
16375

ACTIVITY NO. a.	TRANS-MITTAL NO. b.	ITEM NO c.	SPECIFICATION PARAGRAPH NUMBER d.	DESCRIPTION OF ITEM SUBMITTED e.	TYPE OF SUBMITTAL: DATA f.	DRAWINGS g.	INSTRUCTIONS h.	SCHEDULES i.	STATEMENTS j.	REPORTS k.	CERTIFICATES l.	SAMPLES m.	RECORDS n.	O&M MANUALS o.	CLASSIFICATION: INFORMATION ONLY p.	GOVERNMENT APPROVED q.	REVIEWER r.	CONTRACTOR SCHEDULE DATES: SUBMIT s.	APPROVAL NEEDED BY t.	MATERIAL NEEDED BY u.	CONTRACTOR ACTION: CODE v.	DATE w.	SUBMIT TO GOVERN-MENT x.	GOVERNMENT ACTION: CODE y.	DATE z.	REMARKS aa.
			1.3	Fault Current and Protective Devices	X											X										
				Coordination Studies																						
			1.3	Manufacturer's Catalog Data	X											X										
			1.3	Material, Equipment, and Fixture	X											X										
				Lists																						
			1.3	Installation Procedures	X										X											
			1.3	Electrical Distribution System		X										X										
			1.3	As-Built Drawings		X										X										
			1.3	Factory Test						X					X											
			1.3	Field Testing						X						X										
			1.3	Test Reports						X						X										
			1.3	Cable Installation Reports						X						X										
			1.3	Materials and Equipment							X					X										
			1.3	Cable Splicer Qualification							X					X										
			1.3	Cable Installer Qualifications							X					X										
			1.3	Electrical Distribution System										X		X										

SUBMITTAL REGISTER
(ER 415 1-10)

CONTRACT NO.

TITLE AND LOCATION
CLOSE COMBAT TACTICAL TRAINER (CCTT), FT. LEWIS, WA

CONTRACTOR

SPECIFICATION SECTION
16415

ACTIVITY NO. a.	TRANS-MITTAL NO. b.	ITEM NO c.	SPECIFICATION PARAGRAPH NUMBER d.	DESCRIPTION OF ITEM SUBMITTED e.	TYPE OF SUBMITTAL: DATA f.	DRAWINGS g.	INSTRUCTIONS h.	SCHEDULES i.	STATEMENTS j.	REPORTS k.	CERTIFICATES l.	SAMPLES m.	RECORDS n.	O&M MANUALS o.	CLASSIFICATION: INFORMATION ONLY p.	GOVERNMENT APPROVED q.	REVIEWER r.	CONTRACTOR SCHEDULE DATES: SUBMIT s.	APPROVAL NEEDED BY t.	MATERIAL NEEDED BY u.	CONTRACTOR ACTION: CODE v.	DATE w.	SUBMIT TO GOVERN-MENT x.	GOVERNMENT ACTION: CODE y.	DATE z.	REMARKS aa.
			1.3	Manufacturer's Catalog	X											X										
			1.3	Material, Equipment, and Fixture	X											X										
				Lists																						
			1.3	Installation Procedures	X										X											
			1.3	As-Built Drawings		X										X										
			1.3	On-Site Test					X							X										
			1.3	Factory Test Reports						X						X										
			1.3	Field Test Reports						X						X										
			1.3	Materials and Equipment							X					X										

SUBMITTAL REGISTER
(ER 415 1-10)

CONTRACT NO.

TITLE AND LOCATION
CLOSE COMBAT TACTICAL TRAINER (CCTT), FT. LEWIS, WA

CONTRACTOR

SPECIFICATION SECTION
16610

ACTIVITY NO. a.	TRANS-MITTAL NO. b.	ITEM NO c.	SPECIFICATION PARAGRAPH NUMBER d.	DESCRIPTION OF ITEM SUBMITTED e.	TYPE OF SUBMITTAL: DATA f.	DRAWINGS g.	INSTRUCTIONS h.	SCHEDULES i.	STATEMENTS j.	REPORTS k.	CERTIFICATES l.	SAMPLES m.	RECORDS n.	O&M MANUALS o.	CLASSIFICATION: INFORMATION ONLY p.	GOVERNMENT APPROVED q.	REVIEWER r.	CONTRACTOR SCHEDULE DATES: SUBMIT s.	APPROVAL NEEDED BY t.	MATERIAL NEEDED BY u.	CONTRACTOR ACTION: CODE v.	DATE w.	SUBMIT TO GOVERN-MENT x.	GOVERNMENT ACTION: CODE y.	DATE z.	REMARKS aa.
			1.3	UPS System Performance Data	X											X										
				Sheets																						
			1.3	Spare Parts	X										X											
			1.3	Lesson Plans and Training Manuals	X											X										
			1.3	UPS System		X									X											
			1.3	Factory and Field Tests						X						X										

SUBMITTAL REGISTER
(ER 415 1-10)

CONTRACT NO.

TITLE AND LOCATION
CLOSE COMBAT TACTICAL TRAINER (CCTT), FT. LEWIS, WA

CONTRACTOR

SPECIFICATION SECTION
16670

ACTIVITY NO. a.	TRANS-MITTAL NO. b.	ITEM NO c.	SPECIFICATION PARAGRAPH NUMBER d.	DESCRIPTION OF ITEM SUBMITTED e.	TYPE OF SUBMITTAL: DATA f.	DRAWINGS g.	INSTRUCTIONS h.	SCHEDULES i.	STATEMENTS j.	REPORTS k.	CERTIFICATES l.	SAMPLES m.	RECORDS n.	O&M MANUALS o.	CLASSIFICATION: INFORMATION ONLY p.	GOVERNMENT APPROVED q.	REVIEWER r.	CONTRACTOR SCHEDULE DATES: SUBMIT s.	APPROVAL NEEDED BY t.	MATERIAL NEEDED BY u.	CONTRACTOR ACTION: CODE v.	DATE w.	SUBMIT TO GOVERN-MENT x.	GOVERNMENT ACTION: CODE y.	DATE z.	REMARKS aa.
			1.3	Lightning Protection System		X									X											
			1.3	Materials and Equipment							X					X										

SUBMITTAL REGISTER
(ER 415 1-10)

CONTRACT NO.

TITLE AND LOCATION
CLOSE COMBAT TACTICAL TRAINER (CCTT), FT. LEWIS, WA

CONTRACTOR

SPECIFICATION SECTION
16710

ACTIVITY NO. a.	TRANS-MITTAL NO. b.	ITEM NO c.	SPECIFICATION PARAGRAPH NUMBER d.	DESCRIPTION OF ITEM SUBMITTED e.	TYPE OF SUBMITTAL: DATA f.	DRAWINGS g.	INSTRUCTIONS h.	SCHEDULES i.	STATEMENTS j.	REPORTS k.	CERTIFICATES l.	SAMPLES m.	RECORDS n.	O&M MANUALS o.	CLASSIFICATION: INFORMATION ONLY p.	GOVERNMENT APPROVED q.	REVIEWER r.	CONTRACTOR SCHEDULE DATES: SUBMIT s.	APPROVAL NEEDED BY t.	MATERIAL NEEDED BY u.	CONTRACTOR ACTION: CODE v.	DATE w.	SUBMIT TO GOVERN-MENT x.	GOVERNMENT ACTION: CODE y.	DATE z.	REMARKS aa.
			1.5	Spare Parts	X										X											
			1.5	Premises Distribution System		X										X										
			1.5	Record Drawings		X										X										
			1.5	Manufacturer's Recommendations			X									X										
			1.5	Test Plan					X							X										
			1.4	Qualifications					X							X										
			1.5	Test Reports						X					X											
			1.5	Premises Distribution System							X					X										
			2.1	Materials and Equipment							X					X										
			1.5	Installers							X					X										
			1.5	Record Keeping and Documentation									X			X										

SUBMITTAL REGISTER
(ER 415 1-10)

CONTRACT NO.

TITLE AND LOCATION
CLOSE COMBAT TACTICAL TRAINER (CCTT), FT. LEWIS, WA

CONTRACTOR

SPECIFICATION SECTION
16711

ACTIVITY NO. a.	TRANS-MITTAL NO. b.	ITEM NO c.	SPECIFICATION PARAGRAPH NUMBER d.	DESCRIPTION OF ITEM SUBMITTED e.	TYPE OF SUBMITTAL: DATA f.	DRAWINGS g.	INSTRUCTIONS h.	SCHEDULES i.	STATEMENTS j.	REPORTS k.	CERTIFICATES l.	SAMPLES m.	RECORDS n.	O&M MANUALS o.	CLASSIFICATION: INFORMATION ONLY p.	GOVERNMENT APPROVED q.	REVIEWER r.	CONTRACTOR SCHEDULE DATES: SUBMIT s.	APPROVAL NEEDED BY t.	MATERIAL NEEDED BY u.	CONTRACTOR ACTION: CODE v.	DATE w.	SUBMIT TO GOVERN-MENT x.	GOVERNMENT ACTION: CODE y.	DATE z.	REMARKS aa.
			1.2	Spare Parts	X										X											
			1.2	Telephone System		X									X											
			1.2	Test Plans					X						X											
			3.4	Acceptance Tests						X						X										
			1.2	Installation Procedures						X						X										
			1.2	Telephone System							X					X										

SUBMITTAL REGISTER
(ER 415 1-10)

CONTRACT NO.

TITLE AND LOCATION
CLOSE COMBAT TACTICAL TRAINER (CCTT), FT. LEWIS, WA

CONTRACTOR

SPECIFICATION SECTION
16721

ACTIVITY NO. a.	TRANS-MITTAL NO. b.	ITEM NO c.	SPECIFICATION PARAGRAPH NUMBER d.	DESCRIPTION OF ITEM SUBMITTED e.	TYPE OF SUBMITTAL: DATA f.	DRAWINGS g.	INSTRUCTIONS h.	SCHEDULES i.	STATEMENTS j.	REPORTS k.	CERTIFICATES l.	SAMPLES m.	RECORDS n.	O&M MANUALS o.	CLASSIFICATION: INFORMATION ONLY p.	GOVERNMENT APPROVED q.	REVIEWER r.	CONTRACTOR SCHEDULE DATES: SUBMIT s.	APPROVAL NEEDED BY t.	MATERIAL NEEDED BY u.	CONTRACTOR ACTION: CODE v.	DATE w.	SUBMIT TO GOVERN-MENT x.	GOVERNMENT ACTION: CODE y.	DATE z.	REMARKS aa.
			1.4	Battery	X											X										
			1.4	Voltage Drop	X											X										
			1.4	Spare Parts	X											X										
			1.4	Qualifications	X											X										
			1.4	Fire Alarm Reporting System		X										X										
			1.4	Fire Alarm Reporting System			X									X										
			1.4	Training			X									X										
			1.4	Test Procedures					X							X										
			1.4	Testing						X						X										
			1.4	Equipment							X					X										
			1.4	Installer							X					X										

SUBMITTAL REGISTER
(ER 415 1-10)

CONTRACT NO.

TITLE AND LOCATION
CLOSE COMBAT TACTICAL TRAINER (CCTT), FT. LEWIS, WA

CONTRACTOR

SPECIFICATION SECTION
16726

ACTIVITY NO. a.	TRANS-MITTAL NO. b.	ITEM NO c.	SPECIFICATION PARAGRAPH NUMBER d.	DESCRIPTION OF ITEM SUBMITTED e.	TYPE OF SUBMITTAL: DATA f.	DRAWINGS g.	INSTRUCTIONS h.	SCHEDULES i.	STATEMENTS j.	REPORTS k.	CERTIFICATES l.	SAMPLES m.	RECORDS n.	O&M MANUALS o.	CLASSIFICATION: INFORMATION ONLY p.	GOVERNMENT APPROVED q.	REVIEWER r.	CONTRACTOR SCHEDULE DATES: SUBMIT s.	APPROVAL NEEDED BY t.	MATERIAL NEEDED BY u.	CONTRACTOR ACTION: CODE v.	DATE w.	SUBMIT TO GOVERN-MENT x.	GOVERNMENT ACTION: CODE y.	DATE z.	REMARKS aa.
			1.3	Material and Equipment Lists	X										X											
			1.3	Manufacturer's Catalog Data	X										X											
			1.3	Drawings, Intrusion Detection		X									X											
				System																						
			1.3	As-Built Drawings		X									X											
			1.3	Installation Procedures			X								X											
			1.3	Test Plan					X							X										
			1.3	Test Reports						X						X										
			1.3	Operation and Maintenance Manuals										X		X										

SUBMITTAL REGISTER
(ER 415 1-10)

CONTRACT NO.

TITLE AND LOCATION
CLOSE COMBAT TACTICAL TRAINER (CCTT), FT. LEWIS, WA

CONTRACTOR

SPECIFICATION SECTION
16770

ACTIVITY NO. a.	TRANS-MITTAL NO. b.	ITEM NO c.	SPECIFICATION PARAGRAPH NUMBER d.	DESCRIPTION OF ITEM SUBMITTED e.	TYPE OF SUBMITTAL: DATA f.	DRAWINGS g.	INSTRUCTIONS h.	SCHEDULES i.	STATEMENTS j.	REPORTS k.	CERTIFICATES l.	SAMPLES m.	RECORDS n.	O&M MANUALS o.	CLASSIFICATION: INFORMATION ONLY p.	GOVERNMENT APPROVED q.	REVIEWER r.	CONTRACTOR SCHEDULE DATES: SUBMIT s.	APPROVAL NEEDED BY t.	MATERIAL NEEDED BY u.	CONTRACTOR ACTION: CODE v.	DATE w.	SUBMIT TO GOVERN-MENT x.	GOVERNMENT ACTION: CODE y.	DATE z.	REMARKS aa.
			1.3	Spare Parts	X										X											
			1.3	Radio and Public Address System		X									X											
			1.3	Test Plan						X					X											
			3.3	Acceptance Tests						X					X											
			1.3	Radio and Public Address System										X	X											

This page intentionally blank

SECTION 01320

PROJECT SCHEDULE

PART 1 GENERAL

1.1 SUBMITTALS

Government approval is required for submittals with a "GA" designation; submittals having an "FIO" designation are for information only. The following shall be submitted in accordance with SECTION: SUBMITTALS:

SD-07 Schedules

GA Preliminary project schedule, two (2) copies.

GA initial project schedule, two (2) copies
Activity No. Sort
Predecessor/successor listing
Cost Schedule
Floppy Disk (SDEF Format)
Activity Code Dictionary.

FIO Periodic schedules updates, monthly updates two (2) copies.
Floppy Disks (SDEF Format)
Narrative
Activity No. Sort
Cost Schedule

SD-08 Statements

Qualifications; GA .

Documentation showing qualifications of personnel preparing schedule reports.

1.2 QUALIFICATIONS

The Contractor shall designate an authorized representative who shall be responsible for the preparation of all required project schedule reports. This person shall have previously created and reviewed computerized schedules. Qualifications of this individual shall be submitted to the Contracting Officer for review with the Preliminary Project Schedule submission.

PART 2 PRODUCTS (Not Applicable)

PART 3 EXECUTION

3.1 GENERAL

Pursuant to the Contract Clause, SCHEDULE FOR CONSTRUCTION CONTRACTS a Project Schedule as described below shall be prepared. The scheduling of construction shall be the responsibility of the Contractor. Contractor management personnel shall actively participate in its development. Subcontractors and suppliers working on the project should also contribute in developing and maintaining an accurate Project Schedule. The approved Project Schedule shall be used to measure the progress of the work, to aid in evaluating time extensions, and to provide the basis of all progress payments.

3.2 BASIS FOR PAYMENT

The schedule shall be the basis for measuring Contractor progress. Lack of an approved schedule or scheduling personnel shall result in an inability of the Contracting Officer to evaluate Contractor progress for the purposes of payment. Failure of the Contractor to provide all information, as specified below, shall result in the disapproval of the entire Project Schedule submission and the inability of the Contracting Officer to evaluate Contractor progress for payment purposes. In the case where Project Schedule revisions have been directed by the Contracting Officer and those revisions have not been included in the Project Schedule, then the Contracting Officer may hold retainage up to the maximum allowed by contract, each payment period, until revisions to the Project Schedule have been made.

3.3 PROJECT SCHEDULE

The computer software system utilized by the Contractor to produce the Project Schedule shall be capable of providing all requirements of this specification including the SDEF (Standard Data Exchange Format). Failure of the Contractor to meet the requirements of this specification shall result in the disapproval of the schedule. Manual methods used to produce any required information shall require approval by the Contracting Officer.

3.3.1 Use of the Critical Path Method

The Critical Path Method (CPM) of network calculation shall be used to generate the Project Schedule. The Contractor shall provide the Project Schedule in Precedence Diagram Method (PDM)

3.3.2 Level of Detail Required

With the exception of the initial and preliminary schedule submission, the Project Schedule shall include an appropriate level of detail. Failure to develop or update the Project Schedule or provide data to the Contracting Officer at the appropriate level of detail, as specified by the Contracting Officer, shall result in the disapproval of the schedule. The Contracting Officer will use, but is not limited to, the following conditions to determine the appropriate level of detail to be used in the Project Schedule.

3.3.2.1 Activity Durations

Contractor submissions shall be required to follow the direction of the Contracting Officer regarding reasonable activity durations. Reasonable durations are those that allow the progress of activities to be accurately determined between payment periods. A rule of thumb, that the Contractor should use, is that less than 2 percent of all non-procurement activities' Original Durations shall be greater than 20 days.

3.3.2.2 Procurement Activities

Tasks related to the procurement of long lead materials or equipment shall be included as separate activities in the project schedule. Long lead materials and equipment are those materials that have a procurement cycle of over 90 days. Examples of procurement process activities include, but are not limited to: submittals, approvals, procurement, fabrication, delivery, installation, start-up, and testing.

3.3.2.3 Government Activities

Government and other agencies activities that could impact progress shall be shown. These activities include, but are not limited to: approvals, inspections, utility tie-in, Government Furnished Equipment (GFE) and notice to proceed for phasing requirements.

3.3.2.4 Responsibility

All activities shall be identified in the project schedule by the party responsible to perform the work. Responsibility includes, but is not limited to, the subcontracting firm, (at the lowest tier), Contractor work force, or Government agency performing a given task. Activities shall not belong to more than one responsible party. The responsible party for each activity shall be identified by the Responsibility Code.

3.3.2.5 Work Areas

All activities shall be identified in the project schedule by the work area in which the activity occurs. Activities shall not be allowed to cover more than one work area. The work area of each activity shall be identified by the Work Area Code.

3.3.2.6 Modification or Claim Number

Any activity that is added or changed by contract modification or used to justify claimed time shall be identified by a mod or claim code that changed the activity. Activities shall not belong to more than one modification or claim item. The modification or claim number of each activity shall be identified by the Mod or Claim Number.

3.3.2.7 Bid Item

All activities shall be identified in the project schedule by the Bid Item to which the activity belongs. An activity shall not contain work in more than one bid item. The bid item for each appropriate activity shall be identified by the Bid Item Code.

3.3.2.8 (Not used)

3.3.2.9 Category of Work

All Activities shall be identified in the project schedule according to the category of work which best describes the activity. Category of work refers, but is not limited to, to the procurement chain of activities including such items as submittals, approvals, procurement, fabrication, delivery, installation, start-up, and testing. The category of work for each activity shall be identified by the Category of Work Code.

3.3.2.10 Feature of Work

All activities shall be identified in the project schedule according to the feature of work to which the activity belongs. Feature of work refers, but is not limited to a work breakdown structure for the project. The feature of work for each activity shall be identified by the Feature of Work Code.

3.3.3 Scheduled Project Completion

The schedule interval shall extend from notice-to-proceed to the contract completion date.

3.3.3.1 Project Start Date

The schedule shall start no earlier than the date that the Notice to Proceed (NTP) was acknowledged. The Contractor shall include as the first activity in the project schedule an activity called "Start Project". The "Start Project" activity shall have: a "ES" constraint, a constraint date equal to the date that the NTP was acknowledged, and a zero day duration.

3.3.3.2 Constraint of Last Activity

Completion of the last activity in the schedule shall be constrained by the contract completion date. Calculation on project updates shall be such that if the early finish of the last activity falls after the contract completion date, then the float calculation shall reflect a negative float on the critical path. The Contractor shall include as the last activity in the project schedule an activity call "End Project". The "End Project" activity shall have: a "LF" constraint, a constraint date equal to the completion date for the project, and a zero day duration.

3.3.3.3 Early Project Completion

In the event the project schedule shows completion, the project prior to the contract completion date, the Contractor shall identify those activities that have been accelerated and/or those activities that are scheduled in parallel to support the Contractor's "early" completion. Contractor shall specifically address each of the activities noted at every project schedule update period to assist the Contracting Officer to evaluate the Contractor's ability to actually complete prior to the contract period.

3.3.4 Interim Completion Dates

Contractually specified interim completion dates shall also be constrained to show negative float if the early finish date of the last activity in that phase falls after the interim completion date.

3.3.5 Default Progress Data Disallowed

Actual Start and Finish dates shall not be automatically updated by default mechanisms that may be included in CPM scheduling software systems. Actual Start and Finish dates on the CPM schedule shall match those dates provided from Contractor Quality Control Reports. Failure of the Contractor to document the Actual Start and Finish dates on the Daily Quality Control report for every in progress or completed activity and insure that the data contained on the Daily Quality Control reports is the sole basis for schedule updating shall result in the disapproval of the Contractor's schedule and the inability of the Contracting Officer to evaluate Contractor progress for payment purposes.

3.3.6 Out-of-Sequence Progress

Activities that have posted progress without predecessors being completed (Out-of-Sequence Progress) shall be allowed only by the case-by-case approval of the Contracting Officer. The Contracting Officer may direct that changes in schedule logic be made to correct any or all out-of-sequence work.

3.3.7 Negative Lags

Lag durations contained in the project schedule shall not have a negative value.

3.4 PROJECT SCHEDULE SUBMISSIONS

The Contractor shall provide the submissions as described below. The data disk, reports, and network diagrams required for each submission are contained in paragraph SUBMISSION REQUIREMENTS.

3.4.1 Preliminary Project Schedule Submission

The Preliminary Project Schedule, defining the Contractor's planned operations for the first 60 calendar days shall be submitted for approval within 10 calendar days after Notice to Proceed is acknowledged. The approved preliminary schedule shall be used for payment purposes not to exceed 60 calendar days after Notice to Proceed.

3.4.2 Initial Project Schedule Submission

The Initial Project Schedule shall be submitted for approval within 40 calendar days after Notice to Proceed. The schedule shall provide a reasonable sequence of activities which represent work through the entire project and shall be at a reasonable level of detail.

3.4.3 Periodic Schedule Updates

Based on the result of progress meetings, specified in "Periodic Progress Meetings," the Contractor shall submit periodic schedule updates. These submissions shall enable the Contracting Officer or to assess Contractor's progress. If the Contractor fails or refuses to furnish the information and project schedule data, which in the judgment of the Contracting Officer or authorized representative, is necessary for verifying the contractor's progress, the Contractor shall be deemed not to have provided an estimate upon which progress payment may be made.

3.4.4 Standard Activity Coding Dictionary

The Contractor shall submit, with the Initial Project Schedule, a coding scheme that shall be used throughout the project for all activity codes contained in the schedule. The coding scheme submitted shall list the values for each activity code category and translate those values into project specific designations. For example, a Responsibility Code Value, "ELE", may be identified as "Electrical Subcontractor." Activity code values shall represent the same information throughout the duration of the contract. Once approved with the Initial Project Schedule submission, changes to the activity coding scheme must be approved by the Contracting Officer.

3.5 SUBMISSION REQUIREMENTS

The as noted in paragraph 1.1 items shall be submitted by the Contractor for the initial submission, and every periodic project schedule update throughout the life of the project:

3.5.1 Data Disks

Two data disks containing the project schedule shall be provided. Data on the disks shall be in the format specified in paragraph 3.10 NAS DATA.

3.5.1.1 File Medium

Required data shall be submitted on 89 mm (3.5 inch) disks, formatted to hold 1.44 MB of data, under the MS-DOS Version 5.0 operating system.

3.5.1.2 Disk Label

A permanent exterior label shall be affixed to each disk submitted. The label shall indicate the type of schedule (Initial, Update, or Change), full contract number, project name, project location, data date, name and telephone number or person responsible for the schedule, and the MS-DOS version used to format the disk.

3.5.1.3 File Name

Each file submitted shall have a name related to either the schedule data date, project name, or contract number. The Contractor shall develop a naming convention that will insure that the names of the files submitted are unique. The Contractor shall submit the file naming convention to the Contracting Officer for approval.

3.5.2 Narrative Report

A Narrative Report shall be provided with each update of the project schedule. This report shall be provided as the basis of the Contractor's progress payment request. The Narrative Report shall include: a description of activities along the critical path, a description of current and anticipated problem areas or delaying factors and their impact, and an explanation of corrective actions taken.

3.5.3 Approved Changes Verification

Only project schedule changes that have been previously approved by the Contracting Officer shall be included in the schedule submission. The Narrative Report shall specifically reference, on an activity by activity basis, all changes made since the previous period and relate each change to documented, approved schedule changes.

3.5.4 Schedule Reports

The format for each activity for the schedule reports listed below shall contain: Activity Numbers, Activity Description, Original Duration, Remaining Duration, Early Start Date, Early Finish Date, Late Start Date, Late Finish Date, Total Float. Actual Start and Actual Finish Dates shall be printed for those activities in-progress or completed.

3.5.4.1 Activity Report

A list of all activities sorted according to activity number. For completed activities the Actual Start Date shall be used as the secondary sort.

3.5.4.2 Logic Report

A list of Preceding and Succeeding activities for every activity in ascending order by activity number and then sorted according to Early Start Date. For completed activities the Actual Start Date shall be used as the secondary sort.

3.5.4.3 Total Float Report

A list of all activities sorted in ascending order of total float. Activities which have the same amount of total float shall be listed in ascending order of Early Start Dates.

3.5.4.4 Earnings Report

A compilation of the Contractor's Total Earnings on the project from the Notice to Proceed until the most recent Monthly Progress Meeting. This report shall reflect the Earnings of specific activities based on the agreements made in the field and approved between the Contractor and Contracting Officer at the most recent Monthly Progress Meeting. Provided that the Contractor has provided a complete schedule update, this report shall serve as the basis of determining Contractor Payment. Activities shall be grouped by bid item and sorted by activity numbers. This report shall: sum all activities in a bid item and provide a bid item percent; complete and sum all bid items to provide a total project percent complete. The printed report shall contain, for each activity: Activity Number, Activity Description, Original Budgeted Amount, Total Quantity, Quantity to Date, Percent Complete (based on cost), Earnings to Date.

3.5.5 Network Diagram

The network diagram shall be required on the initial schedule submission and on quarterly update submissions. The network diagram shall depict and display the order and interdependence of activities and the sequence in which the work is to be accomplished. The Contracting Officer will use, but is not limited to, the following conditions to review compliance with this paragraph:

3.5.5.1 Continuous Flow

Diagrams shall show a continuous flow from left to right with no arrows from right to left. The activity or event number, description, duration, and estimated earned value shall be shown on the diagram.

3.5.5.2 Project Milestone Dates

Dates shall be shown on the diagram for start of project, any contract required interim completion dates, and contract completion dates.

3.5.5.3 Critical Path

The critical path shall be clearly shown.

3.5.5.4 Banding

Activities shall be grouped to assist in the understanding of the activity sequence. Typically, this flow will group activities by category of work, work area and/or responsibility.

3.5.5.5 S-Curves

Earnings curves shall be provided showing projected early and late earnings and earnings to date.

3.6 PERIODIC PROGRESS MEETINGS

Progress meetings to discuss payment shall include a monthly on-site meeting or other regular intervals mutually agreed to at the preconstruction conference. During this meeting the Contractor will describe, on an activity by activity basis, all proposed revisions and adjustments to the project schedule required to reflect the current status of the project. The Contracting Officer will approve activity progress, proposed revisions, and adjustments as appropriate.

3.6.1 Meeting Attendance

The Contractor's Project Manager and Scheduler shall attend the regular progress meeting.

3.6.2 Update Submission Following Progress Meeting

A complete update of the project schedule containing all approved progress, revisions, and adjustments, based on the regular progress meeting, shall be submitted not later than 4 working days after the monthly progress meeting.

3.6.3 Progress Meeting Contents

Update information, including Actual Start Dates, Actual Finish Dates, Remaining Durations, and Cost to Date shall be subject to the approval of the Contracting Officer. The following minimum set of items which the Contractor shall address, on an activity by activity basis, during each progress meeting.

3.6.3.1 Start and Finish Dates

The Actual Start and Actual Finish dates for each activity currently in-progress or completed activities.

3.6.3.2 Time Completion

The estimated Remaining Duration for each activity in-progress. Time-based progress calculations must be based on Remaining Duration for each activity.

3.6.3.3 Cost Completion

The earnings for each activity started. Payment shall be based on earnings for each in-progress or completed activity. Payment for individual activities shall not be made for work that contains quality defects. A portion of the overall project amount may be retained based on delays of activities.

3.6.3.4 Logic Changes

All logic changes pertaining to Notice to Proceed on change orders, change orders to be incorporated into the schedule, contractor proposed changes in work sequence, corrections to schedule logic for out-of-sequence progress, lag durations, and other changes that have been made pursuant to contract provisions shall be specifically identified and discussed.

3.6.3.5 Other Changes

Other changes required due to delays in completion of any activity or group of activities are those delays beyond the Contractors control such as strikes and unusual weather. Also included are delays encountered due to submittals, Government Activities, deliveries or work stoppage which makes re-planning the work necessary, and when the schedule does not represent the actual prosecution and progress of the work.

3.7 REQUESTS FOR TIME EXTENSIONS

In the event the Contractor requests an extension of the contract completion date, he shall furnish such justification, project schedule data and supporting evidence as the Contracting Officer may deem necessary for a determination as to whether or not the Contractor is entitled to an extension of time under the provisions of the contract. Submission of proof of delay, based on revised activity logic, duration, and costs (updated to the specific date that the delay occurred) is obligatory to any approvals.

3.7.1 Justification of Delay

The project schedule must clearly display that the Contractor has used, in full, all the float time available for the work involved with this request. The Contracting Officer's determination as to the number of allowable days of contract extension, shall be based upon the project schedule updates in effect for the time period in question and other factual information. Actual delays that are found to be caused by the Contractor's own actions, which result in the extension of the schedule, shall not be a cause for a time extension to the contract completion date.

3.7.2 Submission Requirements

The Contractor shall submit a justification for each request for a change in the contract completion date of under two weeks based upon the most recent schedule update at the time of the Notice to Proceed or constructive direction issued for the change. Such a request shall be in accordance with the requirements of other appropriate Contract Clauses and shall include, as a minimum:

a. A list of affected activities, with their associated project schedule activity number.

b. A brief explanation of the causes of the change.

c. An analysis of the overall impact of the changes proposed.

d. A sub-network of the affected area.

Activities impacted in each justification for change shall be identified by a unique activity code contained in the required data file.

3.7.3 Additional Submission Requirements

For any request for time extension for over 2 weeks, the Contracting Officer may request an interim update with revised activities for a specific change request. The Contractor shall provide this disk within 4 days of the Contracting Officer's request.

3.8 DIRECTED CHANGES

If Notice to Proceed (NTP) is issued for changes prior to settlement of price and/or time, the Contractor shall submit proposed schedule revisions to the Contracting Officer within 2 weeks of the NTP being issued. The proposed revisions to the schedule will be approved by the Contracting Officer prior to inclusion of those changes within the project schedule. If the Contractor fails to submit the proposed revisions, the Contracting Officer may furnish the Contractor suggested revisions to the project schedule. The Contractor shall include these revisions in the project schedule until the Contractor submits revisions, and final changes and impacts have been negotiated. If the Contractor has any objections to the revisions furnished by the Contracting Officer, then the Contractor shall advise the Contracting Officer within 2 weeks of receipt of the revisions. Regardless of the objections, the Contractor will continue to update their schedule with the Contracting Officer's revisions until a mutual agreement in the revisions may be made. If the Contractor fails to submit alternative revisions within 2 weeks of receipt of the Contracting Officer's proposed revisions, the Contractor will be deemed to have concurred with the Contracting Officer's proposed revisions. The proposed revisions will then be the basis for an equitable adjustment for performance of the work.

3.9 OWNERSHIP OF FLOAT

Float available in the schedule, at any time, shall not be considered for the exclusive use of either the Government or the Contractor.

3.10 NAS DATA

The Contractor shall provide the Government with the means to electronically transfer all required NAS data into its ADP equipment and schedule software, such that it can independently obtain and process the information. The Contractor may use network analysis software different from that used by the Contracting Officer in the Resident Office. Under this alternative, the Contractor shall furnish the following:

NAS data that complies with the Scheduling System Data Exchange Format (SDEF). This is a standard ASCII format for exchanging scheduling data and is compatible with our resident management system. Many software developers are using SDEF. The SDEF specifications are in a separate publication, available from the Internet WWW.CECER.AARMY.MIL/PL/SDEF.

-- END OF SECTION --

SECTION 01415

METRIC MEASUREMENTS

1.1 REFERENCES

The publications listed below form a part of this specification to the extent referenced. The publications are referred to in the text by basic designation only.

AMERICAN SOCIETY FOR TESTING AND MATERIALS (ASTM)

ASTM E 380 (1993) Practice for Use of the International System of Units (SI)

ASTM E 621 (1994) Practice for Use of Metric (SI) Units in Building Design and Construction

1.2 GENERAL

This project includes metric units of measurements. The metric units used are the International System of Units (SI) developed and maintained by the General Conference on Weights and Measures (CGPM); the name International System of Units and the international abbreviation SI were adopted by the 11th CGPM in 1960. A number of circumstances require that both metric SI units and English inch-pound (I-P) units be included in a section of the specifications. When both metric and I-P measurements are included, the section may contain measurements for products that are manufactured to I-P dimensions and then expressed in mathematically converted metric value (soft metric) or, it may contain measurements for products that are manufactured to an industry recognized rounded metric (hard metric) dimensions but are allowed to be substituted by I-P products to comply with the law. Dual measurements are also included to indicate industry and/or Government standards, test values or other controlling factors, such as the code requirements where I-P values are needed for clarity or to trace back to the referenced standards, test values or codes. For American Society for Testing and Materials (ASTM) references in the technical specifications, the Contractor shall use the metric publication, if one is available (For example: ASTM A 36, use ASTM A 36M). An acceptable substitute to hard Metric SI Concrete Masonry Units (CMU) and Recessed Lighting Fixtures (RLF) is English in-pound (soft metric) CMU and RLF. The Contractor shall be responsible for any adjustments required to accommodate these alternative English in-pound units at no additional cost to the Government.

1.3 USE OF MEASUREMENTS

Measurements shall be either in SI or I-P units as indicated, except for soft metric measurements or as otherwise authorized. The Contractor shall be responsible for all associated labor and materials when authorized to substitute one system of units for another and for the final assembly and performance of the specified work and/or products.

1.3.1 Hard Metric

A hard metric measurement is indicated by an SI value with no expressed correlation to an I-P value, i.e., where an SI value is not an exact mathematical conversion of an I-P value, such as the use of 100 mm in lieu of 4 inches. Hard metric products are required when only metric dimensions are indicated, except for Contractor's options as outlined in paragraph GENERAL above. Hard metric measurements are often used for field data such as distance from one point to another or distance above the floor. Products are

considered to be hard metric when they are manufactured to metric dimensions or have an industry recognized metric designation.

1.3.2 Soft Metric

a. A soft metric measurement is indicated by an SI value which is a mathematical conversion of the I-P value shown in parentheses e.g. 38.1 mm (1-1/2 inches). Soft metric measurements are used for measurements pertaining to products, test values, and other situations where the I-P units are the standard for manufacture, verification, or other controlling factor. The I-P value shall govern while the metric measurement is provided for information.

b. A soft metric measurement is also indicated for products that are manufactured in industry designated metric dimensions but are required by law to allow substitute I-P products. These measurements are indicated by a manufacturing hard metric product dimension followed by the substitute I-P equivalent value in parentheses e.g., 190 x 190 x 390 mm (7-5/8 x 7-5/8 x 15-5/8 inches).

1.3.3 Neutral

A neutral measurement is indicated by an identifier which has no expressed relation to either an SI or an I-P value (e.g., American Wire Gage (AWG) which indicates thickness but in itself is neither SI nor I-P).

1.4 COORDINATION

Discrepancies, such as mismatches or product unavailability, arising from use of both metric and non-metric measurements and discrepancies between the measurements in the specifications and the measurements in the drawings shall be brought to the attention of the Contracting Officer for resolution.

1.5 RELATIONSHIP TO SUBMITTALS

Submittals for Government approval or for information only shall cover the SI or I-P products actually being furnished for the project. The Contractor shall submit the required drawings and calculations in the same units used in the contract documents describing the product or requirement unless otherwise instructed or approved. The Contractor shall use ASTM E 380 and ASTM E 621 as the basis for establishing metric measurements required to be used in submittals.

END OF SECTION

SECTION 01451

CONTRACTOR QUALITY CONTROL

PART 1 GENERAL

1.1 REFERENCES

The publications listed below form a part of this specification to the extent referenced. The publications are referred to in the text by basic designation only.

AMERICAN SOCIETY FOR TESTING AND MATERIALS (ASTM)

ASTM D 3740 (1996) Minimum Requirements for Agencies Engaged in the Testing and/or Inspection of Soil and Rock as Used in Engineering Design and Construction

(1995b) Agencies Engaged in the Testing and/or Inspection of Materials Used in Construction

1.2 PAYMENT

Separate payment will not be made for providing and maintaining an effective Quality Control program, and all costs associated therewith shall be included in the applicable unit prices or lump-sum prices contained in the Bidding Schedule.

PART 2 PRODUCTS (NOT APPLICABLE)

PART 3 EXECUTION

3.1 GENERAL

The Contractor is responsible for quality control and shall establish and maintain an effective quality control system in compliance with the Contract Clause titled "Inspection of Construction." The quality control system shall consist of plans, procedures, and organization necessary to produce an end product which complies with the contract requirements. The system shall cover all construction operations, both onsite and offsite, and shall be keyed to the proposed construction sequence. The project superintendent will be held responsible for the quality of work on the job and is subject to removal by the Contracting Officer for non-compliance with quality requirements specified in the contract. The project superintendent in this context shall mean the individual with the responsibility for the overall management of the project including quality and production.

3.2 QUALITY CONTROL PLAN

3.2.1 General

The Contractor shall furnish for review by the Government, not later than 10 days after receipt of notice to proceed, the Contractor Quality Control (CQC) Plan proposed to implement the requirements of the Contract Clause titled "Inspection of Construction." The plan shall identify personnel, procedures, control, instructions, test, records, and forms to be used. The Government will consider an interim plan for the first 60 days of operation. Construction will be permitted to begin only after acceptance of the CQC Plan or acceptance of an interim plan applicable to the particular feature of work to be started. Work outside of

the features of work included in an accepted interim plan will not be permitted to begin until acceptance of a CQC Plan or another interim plan containing the additional features of work to be started.

3.2.2 Content of the CQC Plan

The CQC Plan shall include, as a minimum, the following to cover all construction operations, both onsite and offsite, including work by subcontractors, fabricators, suppliers, and purchasing agents:

a. A description of the quality control organization, including a chart showing lines of authority and acknowledgment that the CQC staff shall implement the three phase control system for all aspects of the work specified. The staff shall include a CQC System Manager who shall report to the project superintendent.

b. The name, qualifications (in resume format), duties, responsibilities, and authorities of each person assigned a CQC function.

c. A copy of the letter to the CQC System Manager signed by an authorized official of the firm which describes the responsibilities and delegates sufficient authorities to adequately perform the functions of the CQC System Manager, including authority to stop work which is not in compliance with the contract. The CQC System Manager shall issue letters of direction to all other various quality control representatives outlining duties, authorities, and responsibilities. Copies of these letters shall also be furnished to the Government.

d. Procedures for scheduling, reviewing, certifying, and managing submittals, including those of subcontractors, offsite fabricators, suppliers, and purchasing agents. These procedures shall be in accordance with SECTION: SUBMITTAL PROCEDURES.

e. Control, verification, and acceptance testing procedures for each specific test to include the test name, specification paragraph requiring test, feature of work to be tested, test frequency, and person responsible for each test. (Laboratory facilities will be approved by the Contracting Officer.)

f. Procedures for tracking preparatory, initial, and follow-up control phases and control, verification, and acceptance tests including documentation.

g. Procedures for tracking construction deficiencies from identification through acceptable corrective action. These procedures shall establish verification that identified deficiencies have been corrected.

h. Reporting procedures, including proposed reporting formats.

i. A list of the definable features of work. A definable feature of work is a task which is separate and distinct from other tasks, has separate control requirements, and may be identified by different trades or disciplines, or it may be work by the same trade in a different environment. Although each section of the specifications may generally be considered as a definable feature of work, there are frequently more than one definable features under a particular section. This list will be agreed upon during the coordination meeting.

3.2.3 Acceptance of Plan

Acceptance of the Contractor's plan is required prior to the start of construction. Acceptance is conditional and will be predicated on satisfactory performance during the construction. The Government reserves the

right to require the Contractor to make changes in his CQC Plan and operations including removal of personnel, as necessary, to obtain the quality specified.

3.2.4 Notification of Changes

After acceptance of the CQC Plan, the Contractor shall notify the Contracting Officer in writing of any proposed change. Proposed changes are subject to acceptance by the Contracting Officer.

3.3 COORDINATION MEETING

After the Preconstruction Conference, before start of construction, and prior to acceptance by the Government of the CQC Plan, the Contractor shall meet with the Contracting Officer or Authorized Representative and discuss the Contractor's quality control system. The CQC Plan shall be submitted for review a minimum of 5 calendar days prior to the Coordination Meeting. During the meeting, a mutual understanding of the system details shall be developed, including the forms for recording the CQC operations, control activities, testing, administration of the system for both onsite and offsite work, and the interrelationship of Contractor's Management and control with the Government's Quality Assurance. Minutes of the meeting shall be prepared by the Government and signed by both the Contractor and the Contracting Officer. The minutes shall become a part of the contract file. There may be occasions when subsequent conferences will be called by either party to reconfirm mutual understandings and/or address deficiencies in the CQC system or procedures which may require corrective action by the Contractor.

3.4 QUALITY CONTROL ORGANIZATION

3.4.1 General

The requirements for the CQC organization are a CQC System Manager and sufficient number of additional qualified personnel to ensure contract compliance. The Contractor shall provide a CQC organization which shall be at the site at all times during progress of the work and with complete authority to take any action necessary to ensure compliance with the contract. All CQC staff members shall be subject to acceptance by the Contracting Officer.

3.4.2 CQC System Manager

The Contractor shall identify as CQC System Manager an individual within the onsite work organization who shall be responsible for overall management of CQC and have the authority to act in all CQC matters for the Contractor. The CQC System Manager shall be a graduate engineer, graduate architect, or a graduate of construction management, with a minimum of 5 years construction experience on construction similar to this contract or a construction person with a minimum of 10 years in related work. This CQC System Manager shall be on the site at all times during construction and shall be employed by the prime Contractor. The CQC System Manager shall be assigned no other duties. An alternate for the CQC System Manager shall be identified in the plan to serve in the event of the System Manager's absence. The requirements for the alternate shall be the same as for the designated CQC System Manager.

3.4.3 CQC Personnel

In addition to CQC personnel specified elsewhere in the contract, the Contractor shall provide as part of the CQC organization specialized personnel to assist the CQC System Manager for the following areas: electrical, mechanical, civil, structural, architectural, materials technician, submittals clerk. These individuals may be employees of the prime or subcontractor, and shall be responsible to the CQC System Manager; be physically present at the construction site during work on their areas of responsibility; and

have the necessary education and/or experience in accordance with the experience matrix below. These individuals may perform other duties but must be allowed sufficient time to perform their assigned quality control duties as described in the Quality Control Plan.

Experience Matrix	
Area	**Qualifications**
a. Civil	Graduate Civil Engineer with 2 years experience in the type of work being performed on this project or technician with 5 years related experience
b. Mechanical	Graduate Mechanical Engineer with 2 years experience or person with 5 years related experience
c. Electrical	Graduate Electrical Engineer with 2 years related experience or person with 5 years related experience
d. Structural	Graduate Structural Engineer with 2 years experience or person with 5 years related experience
e. Architectural	Graduate Architect with 2 years experience or person with 5 years related experience
f. Submittals	Submittal Clerk with 1 year experience
g. Concrete, Pavements and Soils	Materials Technician with 2 years experience for the appropriate area

3.4.4 Additional Requirement

In addition to the above experience education requirements the CQC System Manager shall have completed the course entitled "Construction Quality Management For Contractors". This course is periodically offered at AGC offices throughout the state of Washington and Oregon.

3.4.5 Organizational Changes

The Contractor shall maintain the CQC staff at full strength at all times. When it is necessary to make changes to the CQC staff, the Contractor shall revise the CQC Plan to reflect the changes and submit the changes to the Contracting Officer for acceptance.

3.5 SUBMITTALS

Submittals shall be made as specified in Section 01330 SUBMITTAL PROCEDURES. The CQC organization shall be responsible for certifying that all submittals are in compliance with the contract requirements.

3.6 CONTROL

Contractor Quality Control is the means by which the Contractor ensures that the construction, to include that of subcontractors and suppliers, complies with the requirements of the contract. At least three phases of control shall be conducted by the CQC System Manager for each definable feature of work, as follows:

3.6.1 Preparatory Phase

This phase shall be performed prior to beginning work on each definable feature of work, after all required plans/documents/materials are approved/accepted, and after copies are at the work site. This phase shall include:

a. A review of each paragraph of applicable specifications.

b. A review of the contract drawings.

c. A check to assure that all materials and/or equipment have been tested, submitted, and approved.

d. Review of provisions that have been made to provide required control inspection and testing.

e. Examination of the work area to assure that all required preliminary work has been completed and is in compliance with the contract.

f. A physical examination of required materials, equipment, and sample work to assure that they are on hand, conform to approved shop drawings or submitted data, and are properly stored.

g. A review of the appropriate activity hazard analysis to assure safety requirements are met.

h. Discussion of procedures for controlling quality of the work including repetitive deficiencies. Document construction tolerances and workmanship standards for that feature of work.

i. A check to ensure that the portion of the plan for the work to be performed has been accepted by the Contracting Officer.

j. Discussion of the initial control phase.

k. The Government shall be notified at least 48 hours in advance of beginning the preparatory control phase. This phase shall include a meeting conducted by the CQC System Manager and attended by the superintendent, other CQC personnel (as applicable), and the foreman responsible for the definable feature. The results of the preparatory phase actions shall be documented by separate minutes prepared by the CQC System Manager and attached to the daily CQC report. The Contractor shall instruct applicable workers as to the acceptable level of workmanship required in order to meet contract specifications.

3.6.2 Initial Phase

This phase shall be accomplished at the beginning of a definable feature of work. The following shall be accomplished:

a. A check of work to ensure that it is in full compliance with contract requirements. Review minutes of the preparatory meeting.

b. Verify adequacy of controls to ensure full contract compliance. Verify required control inspection and testing.

c. Establish level of workmanship and verify that it meets minimum acceptable workmanship standards. Compare with required sample panels as appropriate.

d. Resolve all differences.

e. Check safety to include compliance with and upgrading of the safety plan and activity hazard analysis. Review the activity analysis with each worker.

f. The Government shall be notified at least 24 hours in advance of beginning the initial phase. Separate minutes of this phase shall be prepared by the CQC System Manager and attached to the daily CQC report. Exact location of initial phase shall be indicated for future reference and comparison with follow-up phases.

g. The initial phase should be repeated for each new crew to work onsite, or any time acceptable specified quality standards are not being met.

3.6.3 Follow-up Phase

Daily checks shall be performed to assure control activities, including control testing, are providing continued compliance with contract requirements, until completion of the particular feature of work. The checks shall be made a matter of record in the CQC documentation. Final follow-up checks shall be conducted and all deficiencies corrected prior to the start of additional features of work which may be affected by the deficient work. The Contractor shall not build upon nor conceal non-conforming work.

3.6.4 Additional Preparatory and Initial Phases

Additional preparatory and initial phases shall be conducted on the same definable features of work if the quality of on-going work is unacceptable, if there are changes in the applicable CQC staff, onsite production supervision or work crew, if work on a definable feature is resumed after a substantial period of inactivity, or if other problems develop.

3.7 TESTS

3.7.1 Testing Procedure

The Contractor shall perform specified or required tests to verify that control measures are adequate to provide a product which conforms to contract requirements, see Table 1 – Minimum Testing, attached at the end of this specification section. Upon request, the Contractor shall furnish to the Government duplicate samples of test specimens for possible testing by the Government. Testing includes operation and/or acceptance tests when specified. The Contractor shall procure the services of a Corps of Engineers approved testing laboratory or establish an approved testing laboratory at the project site. The Contractor shall perform the following activities and record and provide the following data:

a. Verify that testing procedures comply with contract requirements.

b. Verify that facilities and testing equipment are available and comply with testing standards.

c. Check test instrument calibration data against certified standards.

d. Verify that recording forms and test identification control number system, including all of the test documentation requirements, have been prepared.

e. Results of all tests taken, both passing and failing tests, shall be recorded on the CQC report for the date taken. Specification paragraph reference, location where tests were taken, and the sequential control number identifying the test shall be given. If approved by the Contracting Officer, actual test reports may be submitted later with a reference to the test number and date taken. An information copy of tests performed by an offsite or commercial test facility shall be provided directly to the Contracting Officer. Failure to submit timely test reports as stated may result in nonpayment for related work performed and disapproval of the test facility for this contract.

3.7.2 Testing Laboratories

3.7.2.1 Capability Check

The Government reserves the right to check laboratory equipment in the proposed laboratory for compliance with the standards set forth in the contract specifications and to check the laboratory technician's testing procedures and techniques. Costs of testing the Contractor Laboratory facilities for Government acceptance shall be borne by the Contractor. Laboratory facilities, including personnel and equipment, utilized for testing soils, concrete, asphalt and steel shall meet criteria detailed in ASTM D 3740 and ASTM E 329, and be accredited by the American Association of Laboratory Accreditation (AALA), National Institute of Standards and Technology (NIST), National Voluntary Laboratory Accreditation Program (NVLAP), the American Association of State Highway and Transportation Officials (AASHTO), or other approved national accreditation authority. All personnel performing concrete testing shall be certified by the American Concrete Institute (ACI). The contractor shall submit documentation showing the AALA, or other approved testing facility, certification, personnel ACI certifications, and the name and work experience of the Registered Professional Engineer on the staff.

3.7.3 Onsite Laboratory

The Government reserves the right to utilize the Contractor's control testing laboratory and equipment to make assurance tests and to check the Contractor's testing procedures, techniques, and test results at no additional cost to the Government.

3.7.4 Furnishing or Transportation of Samples for Testing

Costs incidental to the transportation of samples or materials will be borne by the Contractor. Samples of materials for test verification and acceptance testing by the Government shall be delivered to the Corps of Engineers Division Laboratory, f.o.b., at the following address:

U.S. Army Corps of Engineers
Materials Testing Center
Waterways Experiment Station
3909 Hall Ferry Road
Vicksburg, MS 39180-6199
Phone: (610) 634-3974

ATTN: Project _____, Contract Number _____

Coordination for each specific test, exact delivery location and dates will be made through the Area Office.

If samples are scheduled to arrive at the laboratory on a weekend (after 1700 Friday through Sunday) notify the laboratory at least 24 hours in advance at (601) 634-3974 to arrange for delivery.

3.8 COMPLETION INSPECTION

3.8.1 Punch-Out Inspection

Near the completion of all work or any increment thereof established by a completion time stated in the Special Clause entitled "Commencement, Prosecution, and Completion of Work," or stated elsewhere in the specifications, the CQC System Manager shall conduct an inspection of the work and develop a punch list of items which do not conform to the approved drawings and specifications. Such a list of deficiencies shall be included in the CQC documentation, as required by paragraph DOCUMENTATION below, and shall include the estimated date by which the deficiencies will be corrected. The CQC System Manager or staff shall make a second inspection to ascertain that all deficiencies have been corrected. Once this is accomplished, the Contractor shall notify the Government that the facility is ready for the Government Pre-Final inspection.

3.8.2 Pre-Final Inspection

The Government will perform this inspection to verify that the facility is complete and ready to be occupied. A Government Pre-Final Punch List may be developed as a result of this inspection. The Contractor's CQC System Manager shall ensure that all items on this list have been corrected before notifying the Government so that a Final inspection with the customer can be scheduled. Any items noted on the Pre-Final inspection shall be corrected in a timely manner. These inspections and any deficiency corrections required by this paragraph shall be accomplished within the time slated for completion of the entire work or any particular increment thereof if the project is divided into increments by separate completion dates.

3.8.3 Final Acceptance Inspection

The Contractor's Quality Control Inspection personnel, plus the superintendent or other primary management person, and the Contracting Officer's Representative shall be in attendance at this inspection. Additional Government personnel including, but not limited to, those from Base/Post Civil Facility Engineer user groups, and major commands may also be in attendance. The final acceptance inspection will be formally scheduled by the Contracting Officer based upon results of the Pre-Final inspection. Notice shall be given to the Contracting Officer at least 14 days prior to the final acceptance inspection and shall include the Contractor's assurance that all specific items previously identified to the Contractor as being unacceptable, along with all remaining work performed under the contract, will be complete and acceptable by the date scheduled for the final acceptance inspection. Failure of the Contractor to have all contract work acceptably complete for this inspection will be cause for the Contracting Officer to bill the Contractor for the Government's additional inspection cost in accordance with the contract clause titled "Inspection of Construction".

3.9 DOCUMENTATION

The Contractor shall maintain current records providing factual evidence that required quality control activities and/or tests have been performed. These records shall include the work of subcontractors and suppliers and shall be on an acceptable form that includes, as a minimum, the following information:

a. Contractor/subcontractor and their area of responsibility.

b. Operating plant/equipment with hours worked, idle, or down for repair.

c. Work performed each day, giving location, description, and by whom. When Network Analysis (NAS) is used, identify each phase of work performed each day by NAS activity number.

d. Test and/or control activities performed with results and references to specifications/drawings requirements. The control phase should be identified (Preparatory, Initial, Follow-up). List deficiencies noted along with corrective action.

e. Quantity of materials received at the site with statement as to acceptability, storage, and reference to specifications/drawings requirements.

f. Submittals reviewed, with contract reference, by whom, and action taken.

g. Off-site surveillance activities, including actions taken.

h. Job safety evaluations stating what was checked, results, and instructions or corrective actions.

i. Instructions given/received and conflicts in plans and/or specifications.

j. Contractor's verification statement.

These records shall indicate a description of trades working on the project; the number of personnel working; weather conditions encountered; and any delays encountered. These records shall cover both conforming and deficient features and shall include a statement that equipment and materials incorporated in the work and workmanship comply with the contract. The original and one copy of these records in report form shall be furnished to the Government daily within 24 hours after the date covered by the report, except that reports need not be submitted for days on which no work is performed. As a minimum, one report shall be prepared and submitted for every 7 days of no work and on the last day of a no work period. All calendar days shall be accounted for throughout the life of the contract. The first report following a day of no work shall be for that day only. Reports shall be signed and dated by the CQC System Manager. The report from the CQC System Manager shall include copies of test reports and copies of reports prepared by all subordinate quality control personnel.

3.10 SAMPLE FORMS

Sample forms are attached at the end of this specification section.

3.11 NOTIFICATION OF NONCOMPLIANCE

The Contracting Officer will notify the Contractor of any detected noncompliance with the foregoing requirements. The Contractor shall take immediate corrective action after receipt of such notice. Such notice, when delivered to the Contractor at the work site, shall be deemed sufficient for the purpose of notification. If the Contractor fails or refuses to comply promptly, the Contracting Officer may issue an order stopping all or part of the work until satisfactory corrective action has been taken. No part of the time lost due to such stop orders shall be made the subject of claim for extension of time or for excess costs or damages by the Contractor.

3.12 IMPLEMENTATION OF GOVERNMENT RESIDENT MANAGEMENT SYSTEM FOR CONTRACTOR QUALITY CONTROL OF CONTRACT

The Contractor shall utilize a Government furnished Contracting Quality Control (CQC) Programming Module (a computerized executable file which is DOS based and operates on a minimum 80386 IBM compatible computer). The Module includes a Daily CQC Reporting System form which must also be used. This form may be in addition to other Contractor desired reporting forms. However, all other such reporting forms shall be consolidated into this one Government specified Daily CQC Report Form. The Contractor will also be required to complete Government-Furnished Module elements which include, but are not limited to, Prime Contractor staffing; letter codes; planned cumulative progress earnings; subcontractor information showing trade, name, address, point-of-contact, and insurance expiration dates; definable features of work; pay activity and activity information; required Quality Control tests tied to individual activities; planned User Schooling tied to specific specification paragraphs and Contractor activities; and Transfer Property Listing. The Contractor shall also enter and expand (as necessary) the following submittal data as provided in the solicitation documents: submittal information relating to specification section, description, activity number, review period and expected procurement period. The sum of all activity values shall equal the contract amount, and all Bid Items, The sum of all activity values shall equal the contract amount, and all Bid Items, Options and Additives shall be separately identified, in accordance with the "Bidding Schedule". Bid Items may include multiple Activities, but Activities may only be assigned to one such Bid Item. This Module shall be completed to the satisfaction of the Contracting Officer prior to any contract payment (except for Bonds, Insurance and/or Mobilization, as approved by the Contracting Officer), and shall be updated as required.

3.12.1 During the course of the contract, the Contractor will receive various Quality Assurance comments from the Government that will reflect corrections needed to Contractor activities or reflect outstanding or future items needing the attention of the Contractor. The Contractor shall acknowledge receipt of these comments by specific number reference on his Daily CQC Report, and shall also reflect on his Daily CQC Report when these items are specifically completed or corrected to permit Government verification.

3.12.2 The Contractor's schedule system shall include, as specific and separate activities, all Preparatory Phase Meetings (inspections); all O&M Manuals; and all Test Plans of Electrical and Mechanical Equipment or Systems that require validation testing or instructions to Government representatives.

TABLE 1

MINIMUM SAMPLING AND TESTING FREQUENCY

Materials	**Test**	**Minimum Sampling and Testing Frequency**
Fills, Embankments, Backfills, Subgrade, Subbase, and Base Course Material		
Fill and Embankment	Field Density2/12/	Two tests per lift for each increment or fraction of 1,672 square meters (2000 sy) and any time material type changes.
	Lab Density3/	One test initially per each type of materials or blended material and any time material type changes, and one every 10 field density tests.
	Gradation1/	One test every 153 cubic meters (200 cubic yards) of fill for each type of materials or blended material and any time material type changes.
Subgrade	Field Density2/12/	One test per each increment or fraction of 84 square meters (100 s.y.)
	Lab Density3/	One test every 10 field density tests.
Backfill for Culverts, Trenches, Buildings and Walls, Pavements, and Other Structures	Field Density2/12/	Culverts: One test per each lift.
		Trenches: One test per lift for each increment or fraction of 152 lineal meters (500 linear feet) for backfill. Under pavements, one test every lift and at every crossing.
		Walls and Buildings Perimeters, Including Footings: One test per lift for each increment or fraction of 61 lineal meters (200 linear feet) of backfill.
		Buildings Slabs on Grade: One test per lift for each increment or faction of 93 square meters (1000 s.f.)

Materials	Test	Minimum Sampling and Testing Frequency
		Areas enclosed by grade beams, compacted with power driven hand operated compactors: One test per lift for each increment or fraction of 46 square meters (500 s.f.) Pavements: Two tests per lift for each increment or fraction of 1,672 square meters (2000 s.y.) Other Structures: One test per lift for each increment or fraction of 61 lineal meters (200 linear feet) of backfill.
	Lab Density[3/]	One test initially per each type of material or blended material and one every 10 field density tests.
	Gradation[1/]	One test per each type of material or blended material and one every 10 field density tests.
Subbase and Base	Gradation[1/](including .02 mm particles size limits.	1 sample for every 3,345 square meters (4,000 sy.)
	In-Place Density[2/] [12/]	1 sample every 1,672 square meters (2,000 sy.)
	Moisture-Density Relationship[3/]	1 initially and every 20 density tests.
	Asphaltic Concrete and Pavements (Non airfield)	
Asphaltic concrete	Marshall method Test	1 test per day minimum and 1 per 907,200 kilograms (1,000 tons) thereafter.
	Specific Gravity	per each Marshall Test.
	Extraction	1 test for each Marshall Method.
	Gradation[5/]	1 per each extraction test.
	Fracture faces[5/]	1 per each extraction test.

Materials	Test	Minimum Sampling and Testing Frequency
Cored or sawed specimens	Perform complete test (thickness, in-place density and bulk specific gravity) on each cored or sawed sample.12/	Take 1 set of 3 cored sawed specimens for each 836 square meters (1,000 square yards) or fraction thereof. One specimen shall be taken from longitudinal joint or from transverse joint.
	Portland Cement Concrete (Non airfield)	
Coarse and Fine Aggregate7/	Moisture, specific gravity and absorption8/	1 initially.
	Gradation and fineness modules	1 every 191 cubic meters (250 cy) of concrete.
	Moisture, specific gravity and absorption8/	(same as coarse aggregate).
Concrete	Slump	Conduct test every day of placement and for every 19 cubic meters (25 cy) and more frequently if batching appears inconsistent. Conduct with strength tests.
	Entrained Air	Conduct with slump test.
	Ambient and concrete temperatures	Conduct with slump tests.
	Unit weight, yield, and water cement ratio	Conduct with strength tests. Check unit weight and adjust aggregate weights to insure proper yield.
	Flexural strength and evaluation	When specified for slabs on grade or for concrete pavements, take one set of 6 beams every 76 cubic meters (100 cy) of concrete with a minimum of 1 set per day. Two beams shall be tested at 7 days, two at 28 days, and two at 90 days.

Materials	Test	Minimum Sampling and Testing Frequency
	Compressive strength	One set of 3 cylinders per day and every 76 cubic meters (100 cy) for each class of structural concrete. Test one cylinder at 7 days and two at 28 days. Additional field cure cylinders shall be made when insitu strengths are required to be known.
Vibrators	Frequency and amplitude	Check frequency and amplitude initially and any time vibration is questionable.
	Masonry	
Concrete Masonry Units9/	Dry shrinkage10/	1 set of 3 per 10,000 units and manufacturers certification and test report.
	Airdry condition11/	Same as dry shrinkage.
	Absorption	" " " "
	Compressive strength	" " " "
	Unit Weight	" " " "
Mortar and grout	Compressive Strength	1 set of 3, every 2,000 units (1 test at 7 days and 2 tests at 28 days).

NOTES:

1/ All acceptance tests shall be conducted from in-place samples.
2/ Additional tests shall be conducted when variations occur due to the contractors operations, weather conditions, site conditions, etc.
3/ Classification (ASTM D-2487), moisture contents, Atterberg limits and specific gravity tests shall be conducted for each compaction test if applicable.
4/ Materials to be submitted only upon request by the Contracting Officer.
5/ Tests can substitute for same tests required under "Aggregates" (from bins or source), although gradations will be required when blending aggregates.
6/ Increase quantities by 50 percent for Paving mixes and by 100 percent for Government testing of admixtures. Include standard deviation for similar mixes from the intended batch plant and data from a minimum of 30 tests, if available. Refer to ACI 214.
7/ A petrographic report for aggregate is required with the sample for source approval. If the total amount of all types of concrete is less than 153 cubic meters (200 c.y.) service records from three separate structures in similar environments which used the aggregates may substitute for the petrographic report.
8/ Aggregate moisture tests are to be conducted in conjunction with concrete strength tests for w/c calculations.
9/ For less than 1,000 units, the above test may be waived at the discretion of the Contracting Officer and acceptance based on manufacturers certification
and test report.

10/ Additional tests shall be performed when changes are made either in the manufacturing processes or in materials used in the production of the masonry units.

11/ If adequate storage protection is not provided at the jobsite, additional tests shall be made to determine that the allowable moisture condition has not been exceeded before the blocks can be placed in the structure.

12/ The nuclear densometer, if properly calibrated, may be used but only in addition to the required testing frequency and procedures using sandcones. The densometer shall be calibrated and is recommended for use when the time for complete results becomes critical.

TABLE 2
STANDARD REPORT FORMS AND USE

Form Number	Form Title	Form Use
NPD 300	Transmittal of Material Samples	Form to accompany any samples sent to NPD Laboratory
NPD 326	Compaction Test Data Sheet	Soil compaction tests.
DD 1206	Sieve Analysis Data	Sieve analysis data sheet for soils.
NPD 320	Mechanical Analysis Test Data	Sieve analysis data sheet and hydrometer data sheet for soils.
ENG 2087	Gradation Curves	Gradation graph for soils and aggregates. (To include specification limits).
DD 1205	Soil Moisture Content	Moisture content sheet for soils and/or aggregates.
NPD 322	Specific Gravity and Absorption Test Data Sheet	Specific gravity and absorption test for soil and aggregates.
DD 1209	Atterberg Limits Determinations	Test and graph for Atterburg limits tests.
DD 1217	Bituminous Mix Design -Aggregate Blending	Aggregate blending sheet for asphaltic concrete.
NPD 346	Asphaltic Concrete Mix Design Report	Asphaltic mix design and aggregate grinding.
DD 1218	Marshall Method - Computation of Properties of Asphalt Mixtures	Marshall Test form.
NPD 88	Screen Analysis of Concrete Aggregates	Gradation test form for aggregates (self carboning).
NPD 357	Mortar Strength of Fine Aggregate Data Sheet	Flexural and compressive strength test form for mortar.
NPD 355	Data Sheet - Compressive and Flexural Strengths of Concrete	Compressive and/or flexural strength testing (include averages per specification).
NPD 359	Report of Concrete Mixture Design	Mix design sheet for Contractor mix submittal.
NPS 57	Statistical Evaluation of Concrete Compression Tests	Summary sheet of concrete tests. Form can be used for flexural strengths if revised to conform with proper days specified. A separate sheet is to be used for each mix design.

(sample of typical Contractor's Daily Report)
DAILY CONSTRUCTION QUALITY CONTROL REPORT

Contract Number: _____ Date: _____ Rpt No._____

Contract Title: _____ Location: _____

Weather: Clear __ P.Cloudy __ Cloudy __ Rainfall __ (__% of workday)

Temperature during workday: High ____ degrees F. Low ___ degrees F.

1. WORK PERFORMED BY CONTRACTOR/SUBCONTRACTOR(S):

Contractor Name	No. of Workers	Crafts/Hours	Work performed

2. EQUIPMENT DATA:

Type, Size, Etc.	Owned/Rented	Hours Used	Hours Standby

3. QUALITY CONTROL INSPECTIONS AND RESULTS: (Include a description of preparatory, initial, and/or follow up inspections or meetings; check of subcontractors work and materials delivered to the site compared to submittals and/or specifications; comments on the proper storage of materials; include comments on corrective actions to be taken):

_____

_____

_____

_____

4. QUALITY CONTROL TESTING AND RESULTS (comment on tests and attach test reports):

_____

_____

_____

5. DAILY SAFETY INSPECTIONS (Include comments on new hazards to be added to the Hazard Analysis and corrective action of any safety issues):

_____

_____

6. REMARKS (Include conversations with or instructions from the Government representatives; delays of any kind that are impacting the job; conflicts in the contract documents; comments on change orders; environmental considerations; etc.):

_____

_____

_____

_____

_____

CONTRACTOR'S VERIFICATION: The above report is complete and correct. All material, equipment used, and work performed during this reporting period are in compliance with the contract documents except as noted above.

_____

CONTRACTOR QC REPRESENTATIVE

(Sample of Typical Contractor's Test Report)

TEST REPORT

STRUCTURE OR BUILDING _____

CONTRACT NO. _____

DESCRIPTION OF ITEM, SYSTEM, OR PART OF SYSTEM TESTED:
_____

_____

DESCRIPTION OF TEST: _____

_____

_____

NAME AND TITLE OF PERSON IN CHARGE OF PERFORMING TESTS FOR THE CONTRACTOR:

NAME_____

TITLE_____

SIGNATURE_____

I HEREBY CERTIFY THAT THE ABOVE DESCRIBED ITEM, SYSTEM, OR PART OF SYSTEM HAS BEEN TESTED AS INDICATED ABOVE AND FOUND TO BE ENTIRELY SATISFACTORY AS REQUIRED IN THE CONTRACT SPECIFICATIONS.

SIGNATURE OF CONTRACTOR
QUALITY CONTROL INSPECTOR_____

DATE_____

REMARKS
_____

_____

_____

END OF SECTION

SECTION 01501

CONSTRUCTION FACILITIES AND TEMPORARY CONTROLS

PART 1 GENERAL

1.1 AVAILABILITY OF UTILITY SERVICES

1.1.1 Water

The Government will make available to Contractor, from existing outlets and supplies, reasonable amounts of potable water without charge. Contractor shall reasonably conserve potable water furnished. Contractor, at its own expense, shall install and maintain necessary temporary connections and distribution lines and shall remove the connections and lines prior to final acceptance of construction.

1.1.2 Electricity

Electric power (240 volts, 100 amps) will be made available by the Government, without charge, to the Contractor for performing work at the work area. The Contractor shall carefully conserve electricity furnished. The Contractor, at its own expense and in a workmanlike manner satisfactory to the Contracting Officer, shall extend the existing electrical distribution system (overhead and underground) for temporary electrical service to the worksite, shall install and maintain necessary temporary connections, and shall remove the same prior to final acceptance of the construction. These connections shall be coordinated with the Base Exterior Electrical Shop, through the Contracting Officer.

1.2 TEMPORARY ELECTRIC WIRING

1.2.1 Temporary Power and Lighting

The Contractor shall provide construction power facilities in accordance with the safety requirements of the National Electric Code NFPA No. 70 and the SAFETY AND HEALTH REQUIREMENTS MANUAL EM 385-1-1. The Contractor, or its delegated subcontractor, shall enforce the safety requirements of electrical extensions for the work of subcontractors. Work shall be accomplished by journeyman electricians.

1.2.2 Construction Equipment

In addition to the requirements of SAFETY AND HEALTH REQUIREMENTS MANUAL, EM 385-1-1, temporary wiring conductors installed for operation of construction tools and equipment shall be either Type TW or THW contained in metal raceways, or shall be hard usage or extra hard usage multiconductor cord. Temporary wiring shall be secured above the ground or floor in a workmanlike manner and shall not present an obstacle to persons or equipment. Open wiring may only be used outside of buildings, and then only in accordance with the provisions of the National Electric Code.

1.2.3 Submittals

Submit detailed drawings of temporary power connections. Drawings shall include, but not be limited to, main disconnect, grounding, service drops, service entrance conductors, feeders, GFCI'S, and all site trailer connections.

1.3 FIRE PROTECTION

During the construction period, the Contractor shall provide fire extinguishers in accordance with the safety requirements of the SAFETY AND HEALTH REQUIREMENTS MANUAL, EM 385-1-1. The Contractor shall remove the fire extinguishers at the completion of construction.

1.4 STAGING AREA

Contractor will be provided adequate open staging area as directed by the Contracting Officer. Area is unsecured, and Contractor shall make provisions for its own security.

Contractor shall be responsible for keeping staging area, and office area clean and free of weeds and uncontrolled vegetation growth. Weeds shall be removed by pulling or cutting to within 1-inch of ground level. Lawn areas shall be mown to keep growth to less than 2-inches. All loose debris and material subject to being moved by prevailing winds in the area shall be picked up or secured at all times.

If the area is not maintained in a safe and clean condition as defined above the Contracting Officer may have the area cleaned by others with the costs being deducted from the Contractor's payment.

1.5 HOUSEKEEPING AND CLEANUP

Pursuant to the requirements of Clause CLEANING UP and Clause ACCIDENT PREVENTION, of the CONTRACT CLAUSES, the Contractor shall assign sufficient personnel to insure compliance. The Contractor shall submit a detailed written plan for implementation of this requirement. The plan will be presented as part of the preconstruction safety plan and will provide for keeping the total construction site, structures, and accessways free of debris and obstructions at all times. Work will not be allowed in those areas that, in the opinion of the Contracting Officer, have unsatisfactory cleanup and housekeeping at the end of the preceding day's normal work shift. At least once each day all areas shall be checked by the Quality Control person of the Contractor and the findings recorded on the Quality Control Daily Report. In addition, the Quality Control person shall take immediate action to insure compliance with this requirement. Housekeeping and cleanup shall be assigned by the Contractor to specific personnel. The name(s) of the personnel shall be available at the project site.

1.6 DIGGING PERMIT

Before performing any onsite excavation, Contractor shall obtain a digging permit. The digging permit can be obtained at Building 4301, room 13, on weekdays between 8 a.m. and 3:30 p.m. Typically it will take a Contractor 3-5 working days to collect all signatures necessary for clearances prior to the permit being issued.

1.7 CONSTRUCTION NEAR COMMUNICATIONS CABLES

1.7.1 Excavation Near Communication Cables

Digging within .9144 meters (3 feet) of communication cables (including fiber optic cables) shall be performed by hand digging until the cable is exposed. The Contracting Officer shall be notified a minimum 3 days prior to digging within a .9144 meter (3-foot) area near cable. The cable route will be marked by the Government prior to excavation in the area. A digging permit shall be obtained by the Contractor before performing any excavation. The Contractor shall be held responsible for any damage to the cable by excavation procedures. Once the cable is exposed, mechanical excavation may be used if there is no chance of damage occurring to the cable.

1.7.2 Reburial of Exposed Utilities

When existing utility lines are reburied a tape, detectable by pipe detector systems, shall be installed above the uncovered length of the utility at a depth of 305 mm (12 inches) below grade. Tape shall be a minimum .127 mm (5 mil) plastic tape with metallic tracer, minimum 76 mm (3 inches) wide, lettering on tape to show buried utility, and brightly colored.

1.7.3 Access to Communications Manhole or Handhole

No communications manhole or handhole shall be entered without first obtaining a fiber optic cable briefing. Coordinate through the Contracting Officer with USAISC, Fort Lewis, Outside Plant Branch, Cable Section, Bldg. 2682.

1.7.4 Cable Cuts or Damage

If a communications cable is cut or damaged the Contractor shall immediately notify the Contracting Officer (CO) and begin gathering personnel and equipment necessary to repair the cut, or damage. Contractor shall begin repairs within one hour of the cut or damage, unless notified otherwise, and continue repairs without interruption until full service is restored.

1.8 PROJECT SIGN

Contractor shall furnish and install 1 project sign in accordance with conditions hereinafter specified and layout shown on drawing No. 49s-40-05-15, Sheets 1 and 2, except Corps of Engineers' castle and Department of Army seal will be Government furnished. All letters shall be block type, upper case. Letters shall be painted as indicated using exterior-type paint. Sign shall be maintained in excellent condition throughout the life of job. Project sign shall be located as directed. Upon completion of project, sign shall be removed and shall remain the property of Contractor.

1.9 ELEVATED WORK AREAS

Workers in elevated work areas in excess of 2 meters (6 feet) above an adjoining surface require special safety attention. In addition to the provisions of SAFETY AND HEALTH REQUIREMENTS MANUAL, EM 385-1-1, the following safety measures are required to be submitted to the Contracting Officer's Representative. Prior to commencement of work in elevated work areas, the Contractor shall submit drawings depicting all provisions of his positive fall protection system including, but not limited to, all details of guardrails. Positive protection for workmen engaged in the installation of structural steel and steel joist shall be provided by safety nets, tie-offs, hydraulic man lifts, scaffolds, or other required means. Decking crews must be tied-off or work over nets or platforms not over 2 meters (6 feet) below the work area. Walking on beams and/or girders and the climbing of columns is prohibited without positive

protection. Perimeter guardrails shall be installed at floor, roof, or wall openings more than 2 meters (6 feet) above an adjoining surface and on roof perimeters. Rails shall be designed to protect all phases of elevated work including, but not limited to, roofing operations and installation of gutters and flashing. Rails around roofs may not be removed until all work on the roof is complete and all traffic on or across the roof ceases. Rails shall be designed by a licensed engineer to provide adequate stability under any anticipated impact loading. As a minimum, the rails shall consist of a top rail at a height of 1067 mm (42 inches), a mid-rail, and a toe board. Use of tie-offs, hydraulic man lifts, scaffolds, or other means of roof edge protection methods may be utilized on small structures such as family housing, prefabricated metal buildings, etc. If safety belts and harnesses are used, the positive fall protection plan will address fall restraint versus fall arrest. Body belts will ONLY be used for fall restraint, they will not be used for fall arrest.

1.10 TRAFFIC CONTROL PLAN

The Contractor shall submit a Traffic Control Plan for moving traffic through and around the construction zone in a manner that is conducive to the safety of motorists, pedestrians, and workers. This plan shall indicate scheduling, placement, and maintenance of traffic control devices in accordance with the U.S. Department of Transportation, Federal Highway Administration publication, Manual on Uniform Traffic Control Devices. The Contractor shall obtain, in writing, from the Directorate of Public Works (PW) Traffic Engineer, through the Contracting Officer, approval of the Traffic Control Plan. The Contractor shall submit his Traffic Control Plan at least 15 working days prior to commencement of street or road work. Streets (except dead end) may be closed to traffic temporarily (except at least one access lane shall be kept open to traffic) by approved written request to the Contracting Officer at least 10 working days prior to street closure. Excavations shall not remain open for more than 1 working day without approval. The Contractor shall identify by site inspection and indicate on the plan all roads and trails used by military or civilian wheeled and tracked vehicular traffic and, by traffic control devices, prevent this traffic from entering the construction zone.

1.11 UTILITIES NOT SHOWN

The Contractor can expect to encounter, within the construction limits of the entire project, utilities not shown on the drawings and not visible as to the date of this contract. If such utilities will interfere with construction operations, he shall immediately notify the Contracting Officer verbally and then in writing to enable a determination by the Contracting Officer as to the necessity for removal or relocation. If such utilities are removed or relocated as directed, the Contractor shall be entitled to equitable adjustment for any additional work or delay. The types of utilities the Contractor may encounter are waterlines, sewer lines (storm and sanitary), gas lines, fueling lines, steam lines, buried fuel tanks, septic tanks, other buried tanks, communication lines, and power lines. These utilities may be active or abandoned utilities.

1.12 GOVERNMENT WITNESSING AND SCHEDULING OF TESTING

The Contractor shall notify the Contracting Officer, by serial letter, of dates and agenda of all performance testing of the following systems: mechanical (including fire protection and EMCS), electrical (including fire protection) medical and food service systems not later than 10 calendar days prior to start of such testing. In this notification, the Contractor shall certify that all equipment, materials, and personnel necessary to conduct such testing will be available on the scheduled date and that the systems have been prechecked by him and are ready for performance and/or acceptance testing. Contractor shall also confirm that all operations and maintenance manuals have been submitted and approved. NO PERFORMANCE AND/OR

ACCEPTANCE TESTING WILL BE PERMITTED UNTIL THE OPERATIONS AND MAINTENANCE MANUALS HAVE BEEN APPROVED.

Government personnel, at the option of the Government, will travel to the site to witness testing. If the testing must be postponed or canceled for whatever reason not the fault of the government, the Contractor shall provide the Government not less than 3 working days advance notice (notice may be faxed) of this postponement or cancellation. Should this 3 working day notice not be given , the Contractor shall reimburse the Government for any and all out of pocket expenses incurred for making arrangements to witness such testing including, but not limited to airline, rental car, meal, and lodging expenses. Should testing be conducted, but fail and have to be rescheduled for any reason not the fault of the Government, the Contractor shall similarly reimburse the Government for all expenses incurred.

1.13 HARD HAT SIGNS

The Contractor shall provide 610 mm by 610 mm (24 by 24 inch) square Hard Hat Area signs at each entry to the project or work area as directed by the Contracting Officer. A minimum of two signs will be required. Signs shall be in accordance with the sketch at the end of this section.

PART 2 PRODUCTS AND PART 3 EXECUTION (NOT APPLICABLE)

END OF SECTION

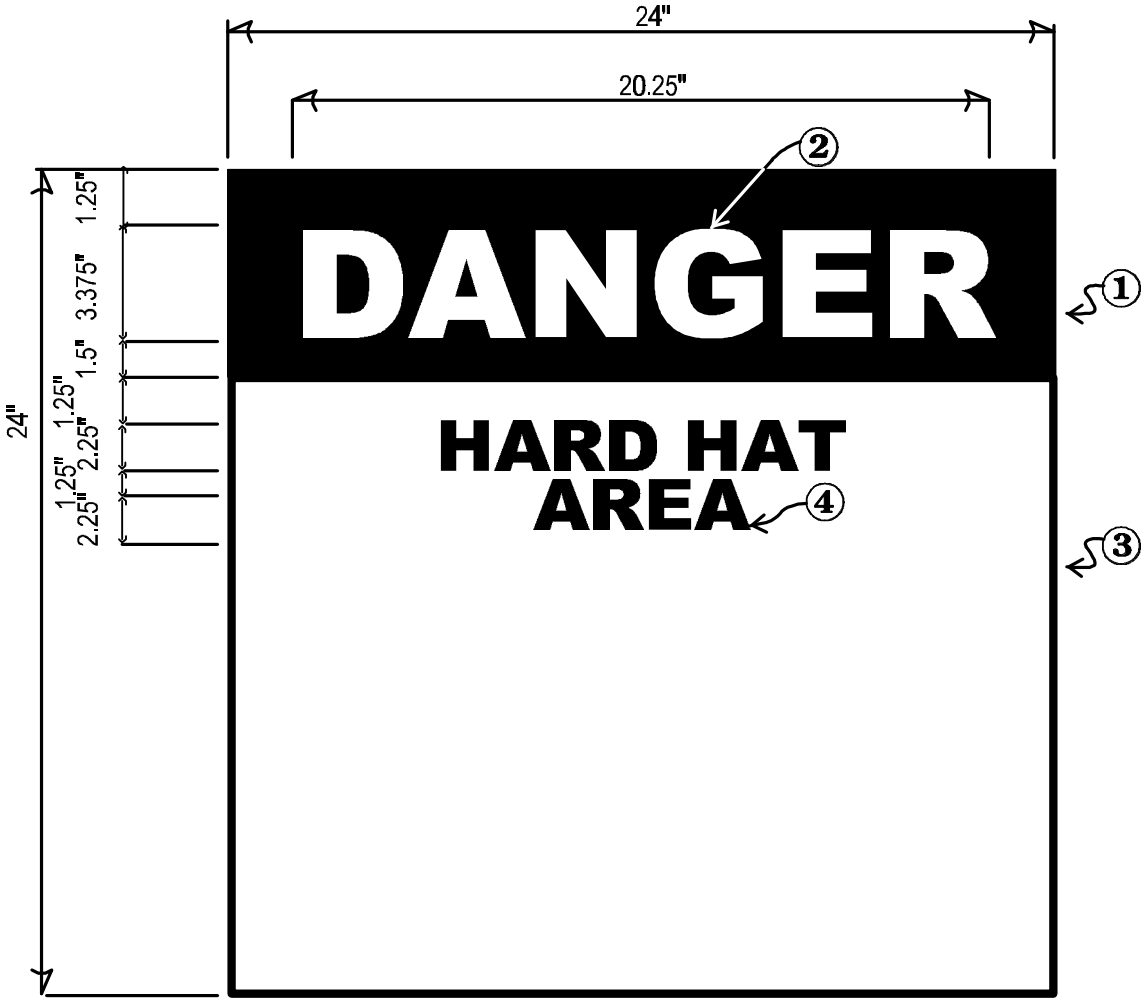

- SIGN SHALL BE FABRICATED FROM .125 THICK 6061-T6 ALUMINUM PANEL
- COLOR
    1. SAFETY RED (SR)
    2. WHITE
    3. WHITE
    4. BLACK
- LETTERING SHALL BE HELVETICA BOLD TYPOGRAPHY.
- LETTERS AND BACKGROUND SHALL BE REFLECTIVE SHEETING MATERIAL.
- SIGNS SHALL BE POSTED AT 6’-6” (BOTTOM SIGN TO GRADE) OR AS DIRECTED BY THE CONTRACTING OFFICER.
- LETTERING TO BE CENTERED ON PANEL.

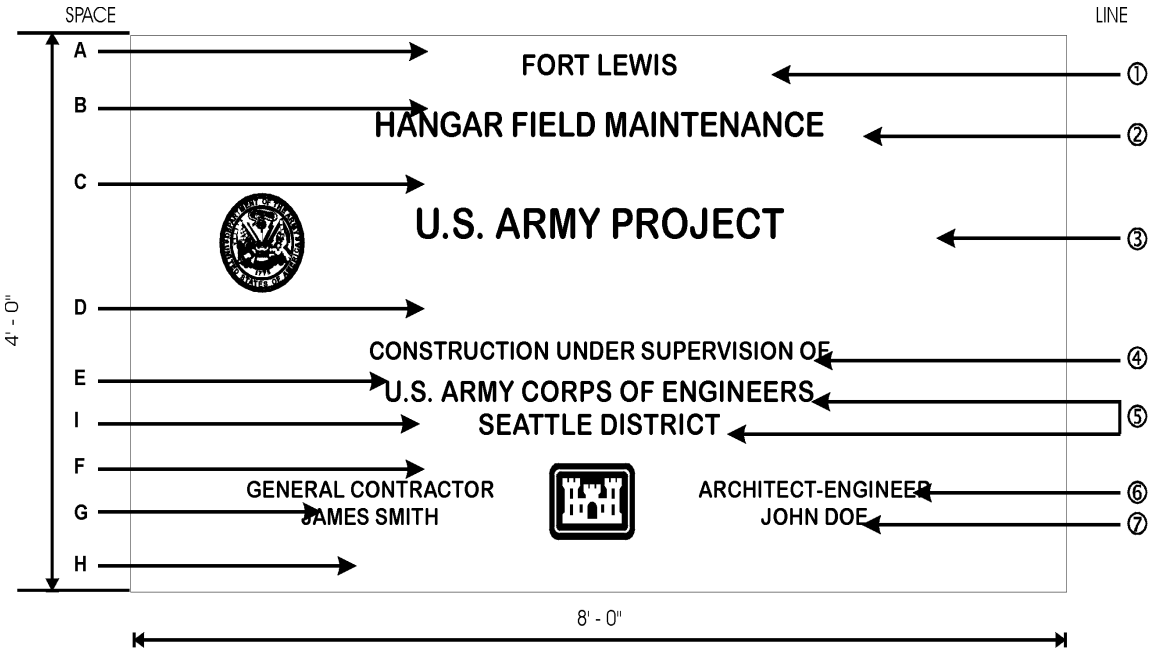

SAMPLE CONSTRUCTION SIGN FOR MCP PROJECTS
SCHEDULE

SPACE	HT.	LINE	DESCRIPTION	LETTER HT.	STROKE
A	2"	1	LOCATION	2 3/8"	1/4"
B	2 5/8"	2	PROJECT NOMENCLATURE *	2 3/4"	3/8"
C	5 3/4"	3	U.S. ARMY PROJECT	4"	1/2"
D	8"	4	CONSTRUCTION UNDER SUP.	1 1/2"	1/8"
E	4"	5	CONSTRUCTION AGENCY *	2 3/8"	1/4"
F	4"	6	GENERAL CONTRACTOR *	1 3/8"	3/16"
G	1"	7	GENERAL CONTRACTOR*	1 3/8"	3/16"
H	2 7/8"	*	WILL VARY TO SUIT PROJECT REQUIREMENTS		
I	2		SEATTLE DISTRICT		

U.S. ARMY

PROJECT
CONSTRUCTION SIGN

Sheet 1 of 2 Scales As shown
U.S. Army Engr. Dist. Seattle, WA.

Dr:	R.L.W.	Transmitted with report
Tr:	R.L.W.	DATED: 20 JUNE 84
Ck:	R.L.W.	File No. 49s/40-05-15

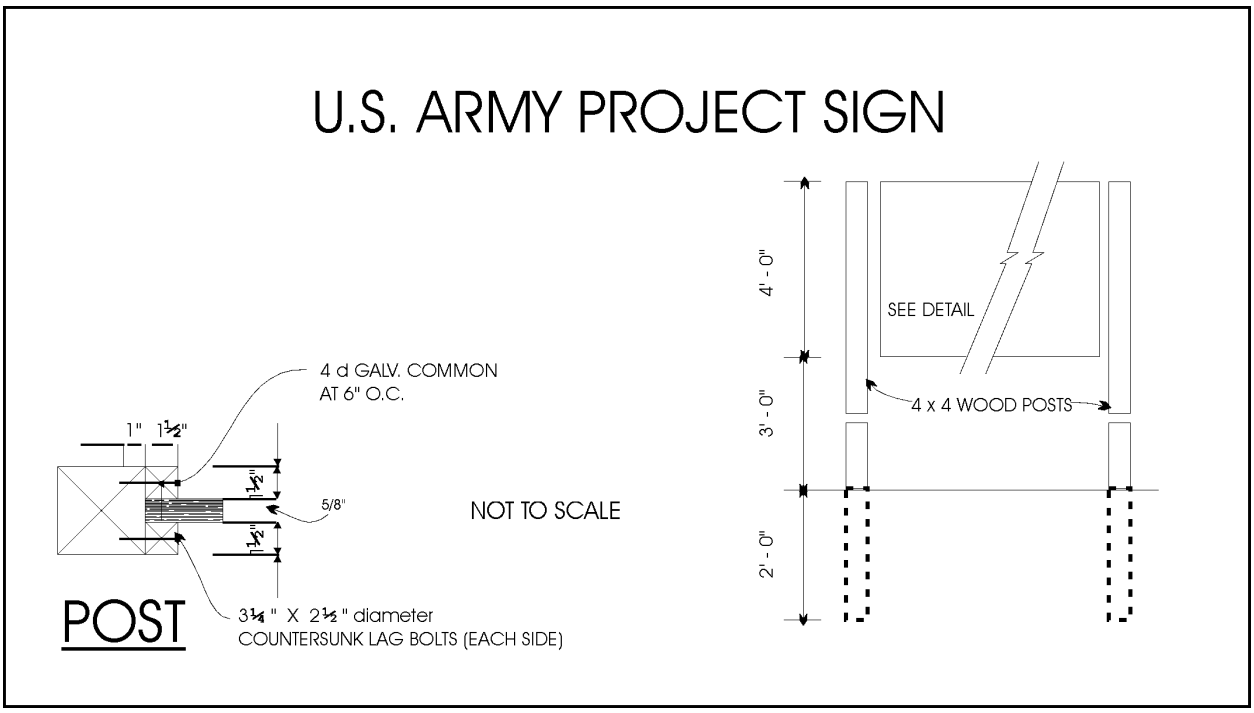

NOTES:

1. Signboard 4' x 8' x 5/8" grade A-C exterior type plywood with medium density overlay on both sides.
2. Paint both sides and edges with one prime coat and two coats of paint, color white exterior type enamel. Lettering shall be as shown on drawing and shall be black gloss exterior type enamel.
3. Lettering shall be Helvetica medium.
4. Acceptable abbreviations may be used for Contractor's name.
5. Department of Air Force Seal and Corps of Engineers' Castle to be Government furnished.
6. No company logo shall be used.
7. Sign posts and 1½" wood trim shall be painted white.
8. Upon completion of work under this contract, the project sign shall be removed from the job site and shall remain the property of the Contractor.

NOTE: The Contractor shall verify the colors to be used with the Contracting Officer prior to constructing the sign.

SHEET 2 OF 2

END OF SECTION

SECTION 01701

OPERATIONS AND MAINTENANCE MANUALS

PART 1 GENERAL

1.1 SUBMITTALS

Submittals shall be in accordance with SECTION 01300: SUBMITTALS.

PART 2 PRODUCTS (NOT APPLICABLE)

PART 3 EXECUTION

3.1 GENERAL

The Contractor shall provide Operation and Maintenance (O&M) manuals for the complete project as applicable under this contract, including all Contractor furnished and installed equipment, systems and materials, and all Government furnished-Contractor installed equipment, systems and materials. Included herein are requirements for compiling and submitting the O&M data. Additional O&M data requirements are specified in the individual sections of the technical specifications. O & M Manual requirements shall be coordinated with the requirements as stated in the other technical specification sections and shall include listings for spare parts, framed instructions, etc.

3.1.1 PREPARATION

Manual preparation shall be under the direction of an individual or organization that has demonstrated expertise and a minimum of 3 years experience in the preparation of comprehensive and complete O&M manuals. Qualifications shall be submitted for Contracting Officer approval.

3.1.2 FORMAT

O&M data shall be separated into distinct systems. O&M manuals for any particular system shall include narrative and technical descriptions of the interrelations with other systems. This narrative shall include a description on how the system works with notable features of the system, including normal and abnormal operating conditions. The explanation of the system is to be short and concise with reference to specific manufacturer's equipment manuals for details (see paragraph CONTENT, subparagraph b). If the quantity of material is such that it will not fit within one binder then it shall be divided into volumes, as required (see paragraph Binders).

3.1.3 Six copies of the complete set of manuals shall be provided for each building (as identified by a building number or building description) for multi-building projects. For those multi-building projects where the work is identical in each building, one copy of the manual is required for each building plus six additional copies. For those projects that do not have work in specific buildings, six copies of the manuals are required for the complete project. Any project may have a combination of these requirements to determine the total number of copies required.

3.1.4 The requirement for six copies of the O&M manual shall supersede and replace any requirements for a lesser amount of manuals which may be indicated in some specifications. each set of manuals shall be tailored for its respective building or facility.

3.2 PRELIMINARY O&M MANUAL AND DATA SUBMITTAL

To establish and assure uniform O&M manual format, the Contractor shall submit and receive Contracting Officer approval on one (1) complete set of O&M data without the binders prior to submission of the final bound manuals. Initial O & M Manual data submittal shall be a minimum of 30 days prior to 90 percent project completion.

The Contractor shall also provide two typewritten pages representing the proposed binder marking format as required under Paragraph: Marking and Binding. One page will represent the front cover/spine and the other page will represent the inside of the front cover.

3.2.1 Data submitted for the manual are to be for the specific equipment furnished, and are in addition to that furnished as shop drawings.

3.2.2 The Contracting Officer will require thirty (30) days for review of submitted O&M manual(s) or data. The Contracting Officer will retain one copy of unacceptable O&M manual submittal and return remainder of copies to the Contractor marked "Returned for Correction." If "Returned for Correction." the Contractor shall resubmit the required number of copies of the manual(s) incorporating all comments, prior to substantial completion and/or use and possession. The Contractor may, at his option, update the copy retained by the Government in lieu of providing the added copy.

3.2.3 For equipment or systems requiring personnel training and/or acceptance testing, the final O&M data shall be approved by the Contracting Officer prior to the scheduling of the training and/or testing. O&M data on equipment or systems not requiring training or testing shall be submitted so all data will be approved and bound in the O&M manuals in the required quantity by the time the project reaches 90 percent completion. Failure to furnish approved, bound manuals in the required quantity by the time the project is 90 percent complete, will be cause for the Contracting Officer to hold or adjust the retained percentage in accordance with CONTRACT CLAUSE, PAYMENTS UNDER FIXED PRICE CONSTRUCTION CONTRACTS.

3.2.4 Three of the six completed copies of the final O&M manuals (for each building) shall contain original manufacturer's data. Data in the remaining manuals may be duplicated copies of original data. All data furnished must be of such quality to reproduce clear, legible copies.

3.3 BINDERS

3.3.1 Construction and Assembly

Manuals shall be sliding posts or screw-type aluminum binding posts (three screws) with spine, but only one type shall be used for all manuals. The manuals shall be hardback plastic-covered, cleanable, not over three (3) inches thick and designed for 8-1/2 x 11 inch paper. The hard cover shall be of minimum stiffness equal to 0.080 inch display board or double weight illustration board.

3.3.2 Marking and Binding

As appropriate, systems shall be grouped into four separate categories and bound into four volumes as follows: Mechanical, Electrical, Fire Protection/Security, and Architectural/General.

Each binder shall have the following information, as a minimum, inscribed on both the spine and cover using an offset or silk screen printing process; "EQUIPMENT OPERATING, MAINTENANCE, AND REPAIR MANUAL;" BUILDING NAME, IDENTIFICATION NUMBER (Building No.), LOCATION, AND DISCIPLINE (MECHANICAL, ELECTRICAL, FIRE PROTECTION/SECURITY, ARCHITECTURAL/GENERAL). Contractor's name and address as well as the contract title and contract number shall be printed on the inside of the front cover.

3.3.3 Color

Color of binder and printing shall be the option of the Contractor except that; (a) printing color shall contrast with binder color, and (b) colors shall be the same for all manuals.

3.3.4 Content

The O&M manuals shall be structured to address each of the following topics in order for each system. When the topic does not apply to a particular system the topic name will be included in the manual with the words "DOES NOT APPLY."

a. Warning Page: A warning page shall be provided to warn of potential dangers (if they exist), such as high voltage, toxic chemicals, flammable liquids, explosive materials, carcinogens, or high pressures. The warning page shall be placed inside the front cover, in front of the title page.

b. Index: Each manual shall have a master index at the front identifying all manuals and volumes and subject matter by system name for each. Following the master index, each manual shall have an index of its enclosures listing each volume, tab numbers, etc., as necessary to readily refer to a particular operating or maintenance instruction. Rigid tabbed fly leaf sheets shall be provided for each separate product and/or piece of equipment under each system in the manual. For example, if a system includes Air Handling Units 1 through 5, there shall be tab sheets AHU-1, AHU-2, AHU-3, AHU-4 and AHU-5. When a manual is divided into volumes, each volume shall have a master index at its front, followed by an index for the specific volume listing in detail all enclosed instructions for materials, individual pieces of equipment, and systems. All pages shall be numbered with the referenced number included in the index.

c. Description: Narrative and technical descriptions of the system and of the interrelations with other systems.

d. Check List Prior to Start Up: Precautions and prechecks prior to start up of equipment and/or system, including safety devices, monitoring devices and control sequence shall be provided.

e. Start Up and Operation: Step-by-step sequential procedures for start up and normal operation checks for satisfactory operation shall be provided. Safety precautions and instructions that should be followed during these procedures shall be incorporated into the operating instructions and flagged for the attention of the operator. Procedures shall include test, manual or normal, and automatic modes.

f. Shutdown: Procedures for normal and emergency shutdown of equipment and/or systems shall be provided. The instructions shall include any procedures necessary for placing the equipment and/or system on standby or preparing the equipment and/or system for start up at a later time. Procedures shall include test, manual or normal, and automatic modes.

g. Operator Preventive Maintenance, Major Maintenance, and Adjustments: The instructions shall include recommended operator preventive maintenance which would normally be performed by operating personnel and adjustment procedures necessary for normal operation. Schedules shall be provided indicating time frames or operating hours for initiating operator maintenance and adjustments, and including manufacturer's recommended major maintenance requirements. Emergency adjustments shall be included and flagged for operator's attention; the instructions shall also include procedures for emergency repairs that could be performed by operating personnel. These emergency repairs or "trouble-shooting guides" shall be outlined in three columns with the following headings:

Column 1 - Trouble
Column 2 - Probable Cause(s)
Column 3 - Correction

h. Operator Data: The instructions shall include equipment and/or system layouts showing all piping, wiring, breakers, valves, dampers, controls, etc., complete with diagrams, schematics, isometrics, and data to explain the detailed operation and control of each individual piece of equipment and/or system, including system components. Layouts shall show the location within the facility of controls, valves, switches, dampers, etc., by reference to site location, wing designation, floor, room number, or other clear and concise directions for locating the item. Operator data may be identical to posted data and framed instructions but shall be prepared as part of the O&M manuals. All control systems operations data shall include the following:

(1) A fully labeled control schematic which details all set points, throttling ranges, actions, spans, proportional bands, and any other adjustment.

(2) A fully labeled elementary diagram (ladder diagram).

(3) A sequence of control on the diagrams cross-referenced to the control schematic and elementary diagram.

(4) A generic, functional description of each control component shown on the drawings.

(5) Catalog data of every control device.

i. Electrical Layout Drawings: The Electrical O&M manuals shall include complete layout drawings and one-line diagrams of exterior and interior electrical with reference to the buildings and site layout. Drawings shall include layout of interior lighting, interior power, intrusion detection systems, communication systems and fire protection systems. Exterior layout drawings shall show where fed from, pad-mount transformer, metering, main distribution panel and communication lines. Layout drawings shall show the location within the facility or reference to the building and the site plan. Layout drawings shall be half size contract as-built drawings and shall be inserted into plastic pockets and installed at the back of the O&M manuals that pertain to that particular drawing.

j. Maintenance Procedures: Recommended procedures shall indicate preventive maintenance, lubrication, and good housekeeping practices which should be performed by operating personnel as well as more complex maintenance procedures which would normally be performed by trained maintenance personnel only. The procedures shall be presented with a schedule indicating time frames or operating hours for specific maintenance to be accomplished. Safety precautions and instructions that should be followed during these procedures shall be incorporated into the maintenance procedures and flagged for the attention of personnel. The procedures shall include necessary operating instructions for taking equipment off line, putting equipment on line, or putting equipment on standby. The instructions shall include all necessary material, equipment, and system data to perform maintenance work and shall include, but not be limited to, manufacturers/bulletins, catalogs, and descriptive data; certified performance curves, copies of approved test plans, including logs and records of performance acceptance test results, and actual adjustments made during final acceptance and inspection; system layouts, including block diagrams, wiring, control, and isometric diagrams: schematic items within the facility; and interrelationships with other items of system.

k. Repairs: Repair procedures shall be presented with a step-by-step procedure for locating and correcting the trouble. A "shop manual" may be used for this purpose. Repair procedures shall be keyed to a troubleshooting guide outlined in three columns with the following headings:

Column 1 - Trouble
Column 2 - Probable Cause(s)
Column 3 - Correction

The procedures shall clearly indicate a major repair activity which should only be performed in a shop or factory versus normal repair work that may be performed onsite or with equipment online. The procedures shall also clearly indicate the limit of repair work that may be performed by Government personnel during the warranty period without voiding warranty provisions. Safety precautions and instructions that should be followed during these procedures shall be incorporated into the repair procedures and flagged for the attention of personnel.

l. Tools: The Contractor shall provide one of each nonstandard tool, test instrument, and gauge necessary for performing maintenance and repair work. A nonstandard tool, test instrument, or gauge is defined as an item normally supplied by the manufacturer for the equipment operation or maintenance. The Contractor shall prepare a master list of such items for all equipment and systems and shall key maintenance and repair procedures to this list. The above referenced items for performing maintenance and repair work shall be provided for each individual facility of multifacility projects.

m. Parts and Supplies: A complete list of parts and supplies shall be provided with the maintenance instructions. The list shall include all parts and components of individual pieces of equipment, and all parts and components of each system and shall identify such items as description of part, model number, circuit or component identification, etc. Parts and supplies lists shall be included within each volume of maintenance instructions. Further, a master list of spare parts and supplies recommended from each manufacturer for 1 year of operation, including source of supply, shall be sublisted with each instruction.

(1) Availability: The Contractor shall list the sources of supply for all parts and supplies, including name of supplier/manufacturer, address, and telephone number. If the parts and supplies are not normally stocked locally, (within 6 hours travel time, round trip by surface transportation) necessary procurement time shall also be a part of the listing.

(2) Spare Parts: The Contractor shall provide those spare parts and supplies that are specified in the TECHNICAL SPECIFICATIONS and those which are normally provided with the equipment or material item. A separate master list shall be provided for these items upon turnover to the Government of the parts and supplies.

n. Maintenance Schedule: A separate schedule of all required periodic maintenance shall be included. This schedule shall list by frequency of occurrence all lubricants and special adjustments required. The types and amounts of lubrication must be specified. The Contractor shall verify that the furnished maintenance schedule agrees with the published manufacturer's data.

3.3.4.1 Architectural/General O&M:

(1) Building Products, Applied Materials, and Finishes: Include product data, with catalog number, size, composition, and color and texture designations. Provide information for re-ordering custom manufactured products. Data shall include, but not be limited to, information on carpet, floor tile, vinyl wall finishes, builder's hardware, etc.

(2) Instructions for Care and Maintenance: Include manufacturer's recommendations for cleaning agents and methods, precautions against detrimental agents and methods, and recommended schedule for cleaning and maintenance.

(3) Moisture-protection and Weather-exposed Products: Include product data listing applicable reference standards, chemical composition, and details of installation. Provide recommendations for inspections, maintenance, and repair.

(4) Additional Requirements: As specified in individual specifications sections.

3.3.4.2 Warranties:

In addition to the general warranty required by the contract, the O&M manuals shall include any specific warranties required by other sections of the TECHNICAL SPECIFICATIONS and other warranties normally provided with the particular piece of equipment or system. Extended warranties normally provided by manufacturers that are beyond the warranty of construction shall be specifically noted. The O&M manuals shall also include a specific warranty section itemizing all standard and extended warranty items. The warranty list shall be as indicated below. Warranties will not begin until the facility is accepted by the Contracting Officer. Copy of warranty shall be included in the manual.

WARRANTY INFORMATION

Project Title
Contract Number

General Contractors Name, Phone Number

ITEM DESCRIPTION	START DATE	END DATE	O & M REFERENCE LOCATION
(in alphabetical order)			
Descriptive Name, Manufacturers/ Warrantors Name Address & Phone No.			

3.3.4.3 Installed Equipment Lists:

A copy of the completed Equipment in Place forms required in SECTION 01705: EQUIPMENT-IN-PLACE shall be included in the manual. The completed forms shall be located at the front of the catalog and O&M data for the equipment listed on the form.

3.3.4.4 Data Layout:

(1) Data Identification: Catalog data shall be marked to clearly identify pertinent data by highlighting the data with pointers or crossing out all nonpertinent data.

(2) Drawings: All drawings bound in the manuals shall be of such size that will require only one fold made right to left. All larger size drawings shall be inserted into a separate pocket in the required location in the manual. All drawings shall be of microfilm quality.

(3) Posted Data: The Contractor shall provide posted data for equipment or systems, in addition to O&M manuals, and as required by other Technical Specifications sections. The data shall consist of as-built schematics of all wiring, controls, piping, etc., as necessary for the operation of the equipment or system, and a condensed typewritten description of the system. The posted data may include approved shop drawings, layout drawings, riser, and block diagrams and shall indicate all necessary interrelation with other equipment and systems. The data may be presented in one or several frames, under glass or sheet acrylic glazing, for clarity and convenience of location. The framed data presentation and outline shall be acceptable to and posted at locations designated by the Contracting Officer. The data shall be posted before personnel training or performance testing acceptance for the related items of equipment or system.

(4) Framed Instructions: Typewritten instructions, framed under glass or sheet acrylic glazing, explaining equipment or system prestart checkout, startup, operations and shutdown procedures, safety precautions, preventive maintenance procedures, and normal operation checks for satisfactory performance of the equipment of systems shall be posted in conjunction with the posted data. The framed instructions may be presented in one or several frames for clarity and convenience of location. The instruction presentation and outline shall be acceptable to the Contracting Officer prior to posting, and shall be posted

at locations designated by the Contracting Officer. All framed instructions shall be posted before personnel training or performance testing acceptance commences for the related item of equipment or system.

3.3.5 Payment

No separate payment will be made for the preparation and submittal of O&M manuals. All costs incurred by the Contractor in the preparation and submittal of O&M manuals shall be considered as part of the price for the equipment and included in the contract price. Approval and acceptance of the final O&M manuals shall be accomplished before final payment is made to the Contractor.

3.3.6 Checklist

Contractor shall complete and initial a copy of the O&M Manual Check List which is provided at the end of this section, and forwarded along with ENG form 4025 as part of the O&M Manual submittal to the Contracting Officer for approval.

O&M MANUAL - REVIEW CHECKLIST

__ Does the manual cover all equipment furnished under the contract? (Review against equipment schedules on the drawings and/or equipment submittals.)

__ Does the manual clearly highlight all relevant portions or cross out all irrelevant portions of catalog data?

__ Does the manual contain operations data for the equipment? (Step-by-step operating instructions, start up procedures, sequences of operation, precautions.)

__ Does the manual contain maintenance and repair data for the equipment? (Lubrication, dismantling, assembly, adjustment, troubleshooting.)

__ Does the manual contain a separate maintenance schedule listed by frequency of occurrence?

__ Does the manual contain parts lists or parts catalogs for the equipment? Parts catalog or list shall contain identification, part numbers, recommended parts to be stocked, and local source of parts.

__ Does the manual contain electrical connection diagrams?

__ Does the manual contain control and interlock system diagrams where applicable?

__ Is every page in the manual numbered and an index provided for ready reference to the data?

__ Is the cover hard (nonflexible) with the facility name, identification number, location, and system embossed on both the spine and cover? Is the Contractor's name and address, and the contract title and contract number embossed on the inside of the manual cover?

__ Is the binding screw posts or sliding post?

__ Is any of the data in the manual under the binding where it cannot be seen?

__ Do three sets of manuals contain all original data sheets and are others clearly legible?

__ Are system layout drawings provided? (Simplified diagrams for the system as installed.)

__ Are all drawings in the manual of such a size that requires one fold right to left, or if a larger size drawing, then inserted into a pocket in the manual?

Note that the above are common requirements to all contracts. Check the specific contract for additional information.

END OF SECTION

SECTION 01702

AS BUILT RECORDS AND DRAWINGS

PART 1 GENERAL

1.1 SUBMITTALS

Data listed in PART 3 of this section shall be submitted in accordance with SECTION: SUBMITTAL PROCEDURES. Due dates shall be as indicated in applicable paragraphs and all submittals shall be completed before final payment will be made.

PART 2 PRODUCTS (NOT APPLICABLE)

PART 3 EXECUTION

3.1 AS-BUILT FIELD DATA

3.1.1 General

The Contractor shall keep at the construction site two complete sets of full size blueline prints of the contract drawings, reproduced at Contractor expense, one for the Contractor's use, one for the Government. During construction, both sets of prints shall be marked to show all deviations in actual construction from the contract drawings. The color red shall be used to indicate all additions and green to indicate all deletions. The drawings shall show the following information but not be limited thereto:

a. The locations and description of any utility lines and other installations of any kind or description known to exist within the construction area. The location includes dimensions and/or survey coordinates to permanent features.

b. The locations and dimension of any changes within the building or structure, and the accurate location and dimension of all underground utilities and facilities.

c. Correct grade or alignment of roads, structures, and utilities if any changes were made from contract plans.

d. Correct elevations if changes were made in site grading from the contract plans.

e. Changes in details of design or additional information obtained from working drawings specified to be prepared and/or furnished by the Contractor including, but not limited to, fabrication erection, installation, and placing details, pipe sizes, insulation material, dimensions of equipment foundations, etc.

f. The topography and grades of all drainage installed or affected as part of the project construction.

g. All changes or modifications from the original design and from the final inspection.

h. Where contract drawings or specifications allow options, only the option actually used in the construction shall be shown on the as-built drawings. The option not used shall be deleted.

These deviations shall be shown in the same general detail utilized in the contract drawings. Marking of the prints shall be pursued continuously during construction to keep them up to date. In addition, the Contractor shall maintain full size marked-up drawings, survey notes, sketches, nameplate data, pricing information, description, and serial numbers of all installed equipment. This information shall be maintained in a current condition at all times until the completion of the work. The resulting field-marked prints and data shall be referred to and marked as "As-Built Field Data," and shall be used for no other purpose. They shall be made available for inspection by the Contracting Officer's representative whenever requested during construction and shall be jointly inspected for accuracy and completeness by the Contracting Officer's representative and a responsible representative of the Contractor prior to submission of each monthly pay estimate. Failure to keep the As-Built Field Data (including Equipment-in-Place lists) current shall be sufficient justification to withhold a retained percentage from the monthly pay estimate.

3.1.2 Submittal of the As-Built Field Data

Two sets of the As-Built Field Data shall be submitted to the Contracting Officer for review and approval a minimum of 20 calendar days prior to the date of final inspection. If review of the preliminary as-built drawings reveals errors and/or omissions, the drawings will be returned to the Contractor for corrections. The Contractor shall make all corrections and return the drawings for backcheck to the Contracting Officer within 10 calendar days of receipt. When submitted drawings are accepted, one set of marked drawings will be returned to the Contractor for the completion of the as-built drawings.

3.2 AS-BUILT ELECTRONIC FILE DRAWINGS

3.2.1 No earlier than 30 days after award the Government will have available for the Contractor one set of AutoCAD or Intergraph MicroStation electronic file format contract drawings, to be used for preparation of as-built drawings. The electronic file drawings will be available on either 89 mm (3-1/2 inch) 1.44 MB floppy disks or ISO-9660 CD-ROM, as directed by the Contracting Officer. The Contractor has 30 days after the receipt of the electronic file to verify the usability of the files, and bring any discrepancies to the attention of the Contracting Officer. Any discrepancies will be corrected within 15 days and files returned to the Contractor**.** The Contractor shall incorporate all deviations from the original contract drawings as recorded in the approved "As-built Field Data" (see paragraph 3.1.2). The Contractor shall also incorporate all the written modifications to the contract drawings that were issued by amendment or contract modification. All revisions and changes shall be incorporated, i.e. items marked "deleted" shall be deleted, clouds around new items shall be removed, etc.

3.2.2 No later than 30 days after final acceptance a complete set of as-built drawings shall be submitted in AutoCAD or Intergraph MicroStation electronic file format. . The electronic file format, layering standards and submittal requirements are specified in paragraphs below. The as-built drawings shall be done in a quality equal to that of the originals. Line work, line weights, lettering, and use of symbols shall be the same as the original line work, line weights, and lettering, and symbols. If additional drawings are required they shall be prepared in electronic file format under the same guidance. When final revisions have been completed, each drawings shall be identified with the words "AS-BUILT" in block letters at least 3/8-inch high placed above the title block if space permits, or if not, below the title block between the border and the trim line. The date of completion and the words "REVISED AS-BUILT" shall be placed in the revision block above the latest revision notation.

3.2.3 Electronic File Submittal Requirements

3.2.3.1 The AutoCAD electronic file(s) deliverable shall be in the same AutoCAD release as provided to the Contractor, 'DWG' binary format. All support files required to display or plot the file(s) in the same manner as they were developed shall be delivered along with the files. These files include but are not limited to Font files, Menu files, Plotter Setup, and Referenced files.

3.2.3.2 The MicroStation electronic file(s) deliverable shall be in MicroStation version 5.0 'DGN' binary format. All support files required to display or plot the file(s) in the same manner as they were developed shall be delivered along with the files. These files include but are not limited to Font Libraries, Pen Tables, and Referenced files.

3.2.3.3 Electronic File Deliverable Media: All electronic files shall be submitted on MS-DOS FAT or extended FAT format 89 mm (3 ½ inch) 1.44 MB floppy disks or ISO 9660 format CD-ROM, as directed by the Contracting Officer. Two complete sets of disks shall be submitted along with one complete set of prints taken from the disks. Each floppy disk shall be clearly marked with typewritten self-adhesive disk labels which shall contain the following information: Contractor's firm name, project name and location, submittal type (AS-BUILT), the name of each file contained within the disk or archive file, the format and version/release number of each file, a disk number indicating the numeric sequence of the disk in the submittal along with the total number of disks in the submittal, and date the disk was made. If submittal is made on CD-ROM, only the Contractor's firm name, project name and location, submittal type (AS-BUILT) and date will be required. Each submittal shall be accompanied by a hard copy transmittal sheet that contains the above information along with a tabulated information about each file, as shown below:

Electronic File Name	Plate Number	Drawing Title

Electronic version of the table shall be included with each submittal set of disks.

3.2.4 Submittal of the Final As-Built Drawings

Two sets of the final as-built record drawings shall be completed and returned together with the approved preliminary as-built drawings to the COE, Seattle District Office, Technical Branch, Records and Information Section, within 30 calendar days of final acceptance. All drawings from the original contract drawings set shall be included, including the drawings where no changes were made. The Government will review all final as-built record drawings for accuracy and conformance to the drafting standards and other requirements contained in DIVISION 1 GENERAL REQUIREMENTS. The drawings will be returned to the Contractor if corrections are necessary. The Contractor shall make all corrections and shall return the drawings to the same office within 7 calendar days of receipt.

3.3 All costs incurred by the Contractor in the preparation and furnishing of as-built drawings in electronic file format shall be included in the contract price and no separate payment will be made for this work. Approval and acceptance of the final as-built record drawings shall be accomplished before final payment is made to the Contractor.

3.4 One set of marked-up as-built blueline prints shall be furnished at the time of system acceptance testing. These as-built blueline prints shall be in addition to the submittals of marked-up as-built blueline prints specified elsewhere in the contract.

END OF SECTION

SECTION 01703

WARRANTY OF CONSTRUCTION

PART 1 GENERAL

1.1 SUBMITTALS

Submittals shall be made in accordance with SECTION: SUBMITTAL PROCEDURES. Submittal dates shall be as defined in PART 3 of this section.

PART 2 PRODUCTS (NOT APPLICABLE)

PART 3 EXECUTION

3.1 WARRANTY OF CONSTRUCTION (APR 1984) (FAR52.246-21):

3.1.1 In addition to any other warranties in this contract, the Contractor warrants, except as provided in paragraph 3.1.9 of this Clause, that work performed under this contract conforms to the contract requirements and is free of any defect in equipment, material, or design furnished, or workmanship performed by the Contractor or any subcontractor or supplier at any tier.

3.1.2 This warranty shall continue for a period of 1 year from the date of final acceptance of the work. If the Government takes possession of any part of the work before final acceptance, this warranty shall continue for a period of 1 year from the date the Government takes possession.

3.1.3 The Contractor shall remedy at the Contractor's expense, any failure to conform, or any defect. In addition, the Contractor shall remedy, at the Contractor's expense, any damage to Government-owned or controlled real or personal property, when that damage is the result of:

a. the Contractor's failure to conform to contract requirements or

b. any defect of equipment, material, workmanship, or design furnished.

3.1.4 The Contractor shall restore any work damaged in fulfilling the terms and conditions of this clause. The Contractor's warranty with respect to work repaired or replaced will run for 1 year from the date of repair or replacement.

3.1.5 The Government will notify the Contractor, in writing or by telephone, after the discovery of any failure, defect, or damage and the Contractor shall respond and be on-site to investigate the problem within 1 working day after notification. The Contractor shall furnish, and maintain, a 24 hour emergency telephone number as the point of contact. For failures, defects, or damage causing loss of power or heat, the Contractor shall respond and mitigate problem within 4 hours.

3.1.6 If the Contractor fails to remedy any failure, defect, or damage within 5 working days after receipt of notice, the Government will have the right to replace, repair, or otherwise remedy the failure, defect, or damage at the Contractor's expense.

3.1.7 With respect to all warranties, express or implied, from subcontractors, manufacturers, or suppliers for work performed and materials furnished under this contract, the Contractor shall:

a. obtain all warranties that would be given in normal commercial practice;

b. require all warranties to be executed, in writing, for the benefit of the Government, if directed by the Contracting Officer; and

c. enforce all warranties for the benefit of the Government, if directed by the Contracting Officer.

3.1.8 In the event the Contractor's warranty under paragraph 3.1.2 of this clause has expired, the Government may bring suit at its expense to enforce a subcontractor's, manufacturer's, or supplier's warranty.

3.1.9 Unless a defect is caused by the negligence of the Contractor or subcontractor or supplier at any tier, the Contractor shall not be liable for the repair of any defects of material or design furnished by the Government nor for the repair of any damage that results from any defect in Government-furnished material or design.

3.1.10 This warranty shall not limit the Government's rights under the Inspection of Construction clause of this contract with respect to latent defects, gross mistakes, or fraud.

3.1.11 After final acceptance of the work, the Contractor shall furnish and install an Equipment Warranty Sticker on Contractor-installed equipment. (Same equipment as listed on the Equipment-In-Place List required under Section 01705: EQUIPMENT-IN-PLACE LIST). Lettering shall be block-type upper case and easily readable. Sticker shall be of a durable type material and of a type that can be written on. Sticker shall state the following:

a. The title "Equipment Warranty."

b. Contractor's name and Contract Number.

c. Date warranty expires.

d. Point of contact, including name and telephone number.

e. Manufacturer.

END OF SECTION

SECTION 01704

FORM 1354 CHECKLIST

PART 1 GENERAL

1.1 Procedures

The form which is a part of this specification section shall be completed for any project having revisions to real property. The following page contains the basic instructions applicable to the form.

1.2 Submittal

This form shall be submitted for approval, and be approved a minimum of 30 days before final inspection of the project. Failure to have this form completed and approved in time for the final inspection will result in delay of the inspection until the checklist is completed.

PARTS 2 AND 3 NOT USED

INSTRUCTIONS FOR DD FORM 1354 CHECKLIST

The following checklist is only a guide to describe various parts of new and modified construction. Alter this form as necessary or create your own document to give complete accounting of the real property added or deleted for this contract. All items added, deleted, replaced, or relocated within the building 1.5 meter (5 foot line), or on site 1.5 meters (5 feet) beyond the building perimeter must be accounted for completely. Only a few of the most common items beyond the 1.5 meter (5 foot) line are included on the checklist under UTILITIES/SURFACE CONSTRUCTION, add additional items as required by the construction accomplished. Attach a continuation sheet and use the checklist format to describe other work related to this particular project. Listed on the last page are additional items with units of measure and descriptive terms.

Costs for each item must include material, tax, installation, overhead and profit, bond and insurance costs. This form should be filled out as each item is installed or each phase of work is completed.

TOTAL FOR ALL ITEMS INCLUDING CONTRACT MODIFICATION COSTS ADDED TOGETHER SHOULD EQUAL THE TOTAL CONTRACT PRICE.

NOTE: USE METRIC UNITS OF MEASURE INSTEAD OF ENGLISH UNITS SHOWN.

KEY TO ABBREVIATIONS

AC - Acres
BL - Barrels, Capacity
BTU - British Thermal Unit
CY - Cubic Yards
EA - Each
GA - Gallons, Capacity
HD - Head
KV - Kilovolt-Amperes, Capacity (KVA)
KW - Kilowatts, Capacity
SE - Seats
SF - Square Feet
SY - Square Yard
MB - Million British Thermal Units
MI - Miles
LF - Linear Feet
KG - Thousand Gallons Per Day, Capacity
TN - Ton
- Number; How Many

DD FORM 1354 CHECKLIST
Transfer of Real Property

CONTRACT NUMBER:_____

CONTRACT TITLE:_____

LOCATION:_____

1. **DEMOLITION** (Describe each item removed and the cost of removal.)*

2. **RELOCATION** (Describe each item relocated and the cost of relocation.)*

3. **REPLACEMENTS** (Describe each item replaced and replacement cost.)*

*Use a continuation sheet if more space is required. Items should be described by quantity and the correct unit of measure.

4. **NEW CONSTRUCTION OVERVIEW: BUILDING(S)/ADDITION(S) TO A BUILDING -** Use a separate checklist for each building and/or addition.

(1) **Outside Dimensions: Length x Width**

(a) Main Building_____
(b) Offsets_____
(c) Wings_____
(d) Basement_____
(e) Attic_____

(2) **Number of Usable Floors**: _____

(3) **Construction: Exterior Materials Used**

(a) Foundation (such as concrete)_____
(b) Floors (such as wood, concrete)_____
(c) Walls (such as wood siding, metal, CMU)_____
(d) Roof (such as metal, comp., built-up)_____

(4) **Utilities ENTERING Building**: Measure lineal meters (LF) from Bldg entry to next larger size of pipe

(a) Water (size & type of pipe; number of lineal meters (LF)_____
(b) Gas (size & type of pipe; number of lineal meters (LF)_____
(c) Sewer (size & type of pipe; number of lineal meters (LF)_____
(d) Electric (phase, voltage, size & type of wire, connected load in amps_____

(5) **Air Conditioning**:

(a) Type_____
(b) Capacity Kilograms (TONS)_____
(c) SQ METERS (SQ YDS) covered by system_____

(6) **Heating**:

(a) Source_____
(b) Fuel_____

(7) **Hot Water Facilities**:

(a) Capacity Liters (GAL)_____
(b) Temperature Rise_____

BUILDING COST:_____

5. **BUILDING SYSTEMS (INTERIOR)**

A. **FIRE PROTECTION**:
Property Code
(1) (880 50/880-211) CLOSED HEAD AUTO SPRINKLERS - Square Meters (SF) & HD (wet or dry pipe; # of Lineal Meters (LF) of service pipe; type of pipe & # of heads; # of Square Meters (SF) covered by system)
DESCRIPTION:
_____
_____
_____
COST: _____

(2) (880 50/880-212) OPEN HEAD DELUGE SYSTEM - Square Meters (SF) & HD (# of Lineal Meters (LF) of service pipe; type of pipe; # of heads; # of Square Meters (SF) covered)
DESCRIPTION:
_____
_____
_____
COST: _____

(3) (880 10/880-221) AUTO FIRE DETECTION SYSTEM - Square Meters (SF) & EA (# of alarms-horns, bells, etc.; # of smoke detectors; # of heat detectors; # of fire alarm panels; # of radio transmitters/antennae)
DESCRIPTION:
_____
_____
_____
COST: _____

(4) (880 20/880-222) MANUAL FIRE ALARM SYSTEM - EA (# of pull stations; # of alarm horns; # of fire extinguisher cabinets)
DESCRIPTION:
_____
_____
_____
COST: _____

(5) (880 60/880-231) CO2 FIRE SYSTEM (# of bottles & size of bottles in kilograms (lbs))
DESCRIPTION:

_____
_____
_____

COST: _____

(6) (880 60/880-232) FOAM FIRE SYSTEM - EA (# of tanks - capacity in kilograms (lbs))
DESCRIPTION:

_____
_____
_____

COST: _____

(7) (880 60/880-233) OTHER FIRE SYSTEM - EA
DESCRIPTION:

_____
_____
_____

COST: _____

(8) (880 60/880-234) HALON 1301 FIRE SYSTEM - EA (# of bottles & size of bottles in kilograms (lbs))
DESCRIPTION:

_____
_____
_____

COST: _____

B. **SECURITY**:

(1) (880 40/872-841) SECURITY ALARM SYSTEM - EA (name of system installed)
DESCRIPTION:

_____
_____
_____

COST: _____

C. **HEATING/COOLING SYSTEMS**

(1) (826 10/890-126) A/C WINDOW UNITS - kilograms (TN) & Square Meters (SF)-(# of units installed; amount of Square Meters (SF) covered per unit; size & capacity of each unit)
DESCRIPTION:

_____
_____
_____

COST: _____

(2) (826 14/890-125) A/C PLT LESS THAN 4,536 kilograms (5 TN) - kilograms (TN) & square meters (SF)-(# of kilograms (TN); # of square meters (SF) covered)
DESCRIPTION:
_____
_____
COST: _____

(3) (826 13/890-121) A/C PLT 4,536 to 22,680 kilograms (5 TO 25 TN) - kilograms (TN)-(# of kilograms (TN); # of square meters (SF) covered)
DESCRIPTION:
_____
_____
_____
COST: _____

(4) (826 12/826-122) A/C PLT 22,680 to 2,267,962 kilograms (25 TO 100 TN) - kilograms (TN)-(# of kilograms (TN); # of square meters (SF) covered)
DESCRIPTION:
_____
_____
_____
COST: _____

(5) (826 11/826-123) A/C PLT OVER 2,267,962 kilograms (100 TN) - kilograms (TN)-(# of kilograms (TN); # of square meters (SF) covered)
DESCRIPTION:
_____
_____
_____
COST: _____

(6) (821 33/821-115) HEATING PLT 220/1026 W (750/3500 MB) - W (MB)-(# of kW (MBH); type of heating system - Ex: Warm air furnace, central)
DESCRIPTION:
_____
_____
_____
COST: _____

(7) (821 32/821-116) HEATING PLT OVER 1026 W (3500 MB) - W(MB)-(# of kW (MBH); type of heating system)
DESCRIPTION:
_____
_____
COST: _____

(8) (811 60/811-147) ELEC EMERGENCY POWER GENERATOR-KW-(size of engine;
rating of generator in kilowatts & voltage)

DESCRIPTION:
_____
_____
_____
COST: _____

(9) (81190 or 82320-gas) STORAGE TANK FOR HEATING or GENERATOR FUEL-Liters (GA); TYPE; FUEL-(Size, type of tank, kind of fuel & # of liters (gallons))
DESCRIPTION:
_____
_____
_____
COST: _____

SITE WORK

6. **UTILITIES/SURFACE CONSTRUCTION**:

(1) (812 41/812-223) PRIM DISTR LINE OH-Lineal Meters (LF)-(# Lineal Meters (LF) of wire; size & type of wire; # of poles; voltage)
DESCRIPTION:
_____
_____
_____
COST: _____

(2) (812/81360) TRANSFORMERS-KVA
POWER POLES-Lineal Meters (LF)
(# poles; # transformers - pad or pole mounted; KVA of wire; # Lineal Meters (LF) of wire)
DESCRIPTION:
_____
_____
_____
COST: _____

(3) (812 40/812-224) SEC DISTR LINE OH-Lineal Meters (LF)-(voltage; size & type of wire; # transformers; KVA; # Lineal Meters (LF) of wire; # of service drops; # poles)
DESCRIPTION:
_____
_____
_____
COST: _____

(4) (812 42/812-225) PRIM DISTR LINE UG-Lineal Meters (LF)-(KVA; voltage; type of conduit & size(encased or direct burial); size & kind of wire inside conduit; Lineal Meters (LF) of wire & conduit)
DESCRIPTION:
_____
_____
_____

COST: _____

(5) (812 42/812-226) SEC DISTR LINE UG-Lineal Meters (LF)-(type of conduit & size; type & size of wires in conduit; Lineal Meters (LF) of conduit & wire inside conduit; voltage)
DESCRIPTION:
_____
_____
_____
COST: _____

(6) (812 30/812-926) EXTERIOR LIGHTING-EA-(streets or parking area lights) (# & type of lights; whether pole mounted or not; # Lineal Meters (LF) of connecting wire if pole mounted)
DESCRIPTION:
_____
_____
_____
COST: _____

(7) (824 10/824-464) GAS MAINS-Lineal Meters (LF) (size, type, & # of Lineal Meters (LF) of pipe)
DESCRIPTION:
_____
_____
_____
COST: _____

(8) (831 90/831-169) SEWAGE SEPTIC TANK-thousand liters (KG)-(size, kind of material, & capacity)
DESCRIPTION:
_____
_____
_____
COST: _____

(9) (832 10/832-266) SANITARY SEWER-Lineal Meters (LF)-(sizes & types of pipes - # of Lineal Meters (LF) of each; # of cleanouts; # & size of manholes)
DESCRIPTION:
_____
_____
_____
COST: _____

(10) (842 10/842-245) WATER DISTR MAINS (POTABLE)-Lineal Meters (LF)-(# Lineal Meters (LF) & size, type of pipe)
DESCRIPTION:
_____
_____
_____
COST: _____

(11) (843 11/843-315) FIRE HYDRANTS-EA-(#; size & type)
DESCRIPTION:
_____
_____
_____
COST: _____

(12) (851 90/851-143) CURBS & GUTTERS-Lineal Meters (LF)-(# Lineal Meters (LF); material; width & height)
DESCRIPTION: (Is curb extruded or standard?)_
_____
_____
_____
COST: _____

(13) (851 90/851-145) DRIVEWAY-Square Meters (SY)-Square Meters (SY); material used; thickness)
DESCRIPTION:
_____
_____
_____
COST: _____

(14) (851 10/12/851-147) ROAD-Square Meters (SY) & Lineal Meters (LF)-Square Meters (SY); material used; thickness; Lineal Meters (LF))
DESCRIPTION:
_____
_____
_____
COST: _____

(15) (85210/11 /852-262) VEHICLE PARKING-Square Meters (SY)-Square Meters (SY); material used; thickness; # of bollards; # of wheel stops; # of regular parking spaces; # of handicap spaces)
DESCRIPTION:
_____
_____
_____
COST: _____

(16) (852 20/852-289) SIDEWALKS-Square Meters (SY) & Lineal Meters (LF)-(# Square Meters (SF) & Lineal Meters (LF); dimensions of each section & location; thickness; material used)
DESCRIPTION:
_____
_____
_____
COST: _____

(17) (871 10/871-183) STORM DRAIN DISPOSAL-Lineal Meters (LF)-(# Lineal Meters (LF) of pipe; sizes & types of pipe; # of catch basins & manholes & sizes of each)
DESCRIPTION:
_____
_____
_____
COST: _____

(18) (872 15/872-247) FENCE, SECURITY (ARMS)-Lineal Meters (LF)-(# of Lineal Meters (LF); fence material; # & type of gate(s); # strands of barbed wire on top)
DESCRIPTION:
_____
_____
_____
COST: _____

(19) (87210/12/872-248) FENCE, INTERIOR-Lineal Meters (LF)-(# of Lineal Meters (LF); fence material; # & kind of gate(s)
DESCRIPTION:
_____
_____
_____
COST: _____

(20) (890 70/890-187) UTILITY VAULT(4 or more transformers)- Square Meters (SF) (# Square Meters (SF); dimensions of vault; # of transformers)
DESCRIPTION:
_____
_____
_____
COST: _____

(21) (135 10/135-583) TEL DUCT FACILITY-Lineal Meters (LF)-(# of Lineal Meters (LF); size & type of conduit; type of wire)
DESCRIPTION:
_____
_____
_____
COST: _____

(22) (135 10/135-586) TEL POLE FACILITY-Lineal Meters (LF)-(# Lineal Meters (LF) & type of wire; # of poles)
DESCRIPTION:
_____
_____
_____
COST: _____

7. **INSTALLED EQUIPMENT**: Furnish an Equipment-In-Place List. Any price related to equipment should already be included in this checklist.

8. **SYSTEMS NOT PREVIOUSLY LISTED**: Attach a separate sheet and use the same format to describe the system(s). Example: CATV system, intercom system, or other utilities and surface construction not described on this checklist.

9. **ASBESTOS REMOVAL**: Furnish a description by building of the number of Lineal Meters (LF) of asbestos removed, number of Lineal Meters (LF) of reinsulation, number of Square Meters (SF) of soil encapsulation, and number and size of tanks, etc., where asbestos was removed. Also, identify buildings by their numbers and use.

10. **MAINTENANCE/RENOVATIONS**: List by building number and describe all additions and deletions by quantity and the correct unit of measure. Furnish a cost per building.

UTILITIES/SURFACE CONSTRUCTION - Listed below are some additional items which may or may not apply to your contract. EACH item installed on site should be listed and priced separately even if not included on this checklist.

(1) IRRIGATION SYSTEM(-Lineal Meters (LF) of pipe; size & type of pipe; number and type of heads)
(2) UNDERGROUND/ABOVEGROUND STORAGE TANKS(-Liters (GA), type of tank; material stored)
(3) (833-354) DUMPSTER ENCLOSURE(-Square Meters (SF) & dimensions)
(4) (890-152) UNLOADING PAD(-Square Meters (SY); material)
(5) SIGNAGE-(Dimensions; material)
(6) (12580) CATHODIC PROTECTION(kilometers; Lineal Feet) (MI; LF)
(7) (87270 LIGHTNING PROTECTION-Lineal Feet (LF)
(8) (81290) POLE DUCT RISER(-Lineal Feet (LF, type of material)
(9) RAMPS-Square Meters (SF), material; Cubic Meters (CY) if concrete-use code for sidewalk if concrete)
(10) (89080/890-158) LOAD AND UNLOAD PLATFORM-Square Meters (SF)
(11) (83240/832-255) INDUSTRIAL WASTE MAIN-Lineal Meters (LF)
(12) WHEEL STOPS-(EA; size & material)
(13) (81350) OUTDOOR INTEGRAL DISTR CTR-(KVA)
(14) (45110) OUTDOOR STORAGE AREA-Square Meters (SF)
(15) (73055/730-275) BUS/WAIT SHELTER-Square Meters (SF)
(16) (690-432) FLAGPOLE-(EA; dimensions)
(17) (93210) SITE IMPROVEMENT-(JOB)
(18) (93220) LANDSCAPE PLANTING (Hectare (Acre); EA; Square Meters (SF))
(19) (93230) LANDSCAPE BERMS/MOUNDS-Square Meters (SY)
(20) (93410) CUT AND FILL-Cubic Meters (CY)
(21) (843-315) FIRE HYDRANTS-(EA; Type)
(22) (14970) LOADING AND UNLOADING DOCKS AND RAMPS (not connected to a Bldg)-Square Meters (SF) (23) BICYCLE RACK-(EA)
(24) (85140/812-928) TRAFFIC SIGNALS-(EA)
(25) (87210) FENCING OR WALLS-Lineal Meters (LF)
(26) (15432) RIPRAP-Lineal Meters & Square Meters (LF & SY)
(27) (75061) GRANDSTAND OR BLEACHERS-(EA; SE)
(28) 87150/871-187) RETAINING WALLS-Lineal Meters; Square Meters (LF; SY); material

NOTE: 5 Digit Codes-Army; 6 Digit Codes-Air Force

END OF SECTION

SECTION 01705

EQUIPMENT-IN-PLACE LIST

PART 1 GENERAL

1.1 SUBMITTALS

Data listed in PART 3 of this section shall be submitted in accordance with section 01330 SUBMITTAL PROCEDURES. Due dates shall be as indicated in applicable paragraphs and all submittals shall be completed before final payment will be made.

PART 2 PRODUCTS (NOT APPLICABLE)

PART 3 EXECUTION

3.1 Submittal:

The final equipment-in-place list shall be completed and returned to the Contracting Officer within 30 calendar days of the final inspection. The Contracting Officer will review all final Equipment-In-Place Lists for accuracy and conformance to the requirements contained in DIVISION 1 GENERAL REQUIREMENTS. The lists shall be returned to the Contractor if corrections are necessary. The Contractor shall make all corrections and shall return the lists to the Contracting Officer within 7 calendar days of receipt.

3.2 EQUIPMENT-IN-PLACE LIST:

Contractor shall submit for approval, at the completion of construction, a list of equipment-in-place. This list shall be updated and kept current throughout construction, and shall be jointly inspected for accuracy and completeness by the Contracting Officer's representative and a responsible representative of the Contractor prior to submission of each monthly pay estimate. A sample form showing minimum data required is provided at the end of this section. The EQUIPMENT-IN-PLACE LIST shall be comprised of all equipment falling under one or more of the following classifications:

a. Each piece of equipment listed on the mechanical equipment schedules.
b. Each electrical panel, switchboard, and MCC panel.
c. Each transformer.
d. Each piece of equipment or furniture designed to be movable.
e. Each piece of equipment that contains a manufacturer's serial number on the name plate.
f. All Government furnished, Contractor installed equipment per a. through e. (price data excluded)

This information shall be listed in the RMS CQC Module furnished by the Government under the “Installed Property” menu selection.

3.3 PAYMENT:

All costs incurred by the Contractor in the preparation and furnishing of Equipment-In-Place Lists shall be included in the contract price and no separate payment will be made for this work. Approval and acceptance of the final Equipment-In Place Lists shall be accomplished before final payment is made to the Contractor.

3.4 RMS CQC SOFTWARE MODULE

The Contractor is required to use the RMS CQC Software module to manage the above required Equipment - In - Place data. See Specification Section CONTRACT0R QUALITY CONTROL, paragraph IMPLEMENTATION OF GOVERNMENT RESIDENT MANAGEMENT SYSTEM FOR CONTRACTOR QUALITY CONTROL OF CONTRACT.

EQUIPMENT-IN-PLACE LIST

CONTRACT NO.: _____

Specification Section: _____ Paragraph No. _____

ITEM DESCRIPTION: _____

Item Name: _____

Serial Number: _____

Model Number: _____

Capacity: _____Replacement Cost _____

ITEM LOCATION:

Building Number: _____ Room Number: _____

or Column Location: _____

MANUFACTURER INFORMATION:

Manufacturer Name: _____

Trade Name (if different from item name): _____

Manufacturer's Address: _____

_____

Telephone Number: _____

WARRANTY PERIOD: _____

CHECKED BY: _____

END OF SECTION

SECTION 02110

CLEARING AND GRUBBING

1.1 DEFINITIONS

1.1.1 Clearing

Clearing shall consist of the felling, trimming, and cutting of trees into sections and the satisfactory disposal of the trees and other vegetation designated for removal, including down timber, snags, brush, and rubbish occurring in the areas to be cleared.

1.1.2 Grubbing

Grubbing shall consist of the removal and disposal of stumps, roots larger than 75 millimeters (mm) in diameter, and matted roots from the designated grubbing areas.

PART 2 PRODUCTS (NOT APPLICABLE)

PART 3 EXECUTION

3.1 CLEARING

Trees, stumps, roots, brush, and other vegetation in areas to be cleared shall be cut off flush with or below the original ground surface, except such trees and vegetation as may be indicated or directed to be left standing. Trees designated to be left standing within the cleared areas shall be trimmed of dead branches 38 mm or more in diameter and shall be trimmed of all branches the heights indicated or directed. Limbs and branches to be trimmed shall be neatly cut close to the bole of the tree or main branches. Cuts more than 38 mm in diameter shall be painted with an approved tree-wound paint. Trees and vegetation to be left standing shall be protected from damage incident to clearing, grubbing, and construction operations by the erection of barriers or by such other means as the circumstances require. Clearing shall also include the removal and disposal of structures that obtrude, encroach upon, or otherwise obstruct the work.

3.2 GRUBBING

Material to be grubbed, together with logs and other organic or metallic debris not suitable for foundation purposes, shall be removed to a depth of not less than 450 mm below the original surface level of the ground in areas indicated to be grubbed and in areas indicated as construction areas under this contract, such as areas for buildings, and areas to be paved. Depressions made by grubbing shall be filled with suitable material and compacted to make the surface conform with the original adjacent surface of the ground.

3.3 DISPOSAL OF MATERIALS

3.3.1 Materials Other Than Salable Timber

Logs, stumps, roots, brush, rotten wood, and other refuse from the clearing and grubbing operations shall be disposed of in the designated disposal areas, except when otherwise approved in writing. Such permission will state the conditions covering the disposal of such products and will also state the areas in which they may be placed. Permission to dispose of such products on private property shall be in writing, and a copy of this permit shall be filed with the Contracting Officer.

END OF SECTION

SECTION 02210

GRADING (EARTHWORK)

PART 1 GENERAL

1.1 REFERENCES

The publications listed below form a part of this specification to the extent referenced. The publications are referred to in the text by basic designation only.

AMERICAN SOCIETY FOR TESTING AND MATERIALS (ASTM)

ASTM C 117	(1995) Test Method for Materials Finer Than 75-µm(No. 200) Sieve in Mineral Aggregates by Washing.
ASTM C 136	(1996) Method of Sieve Analysis of Fine and Corase Aggregates.
ASTM D 422	(1963, R1990) Test Method for Particle-Size Analysis of Soils.
ASTM D 1556	(1990, R1996)) Density of Soil In-Place by the Sand-Cone Method.
ASTM D 1557	(1991) Moisture-Density Relations of Soils and Soil-Aggregate Mixtures Using a 4.54-kilogram (kg) (10-lb) Rammer and 457-millimeters (mm) (18-inch) Drop. Laboratory Compaction Characteristics of Soil Using Modified Effort of 2,700 kN-m/cu.m. (56,000 ft-lbf/cu. ft.).
ASTM D 2167	(1994) Density and Unit Weight of Soil In-Place by the Rubber Balloon Method
ASTM D 2487	(1993) Standard Classification of Soils for Engineering Purposes (Unified Soil Classification System).
ASTM D 3740	(1996) Standard Practice for Minimum Requirements for Agencies Engaged in the Testing and/or Inspection of Soil and Rock as Used in Engineering Design and Construction.

1.2 DEFINITIONS

1.2.1 Satisfactory Materials

Materials classified in ASTM D 2487 as GW, GP, SW, and SP, and free from roots and other organic matter, trash, debris, and frozen materials and stones larger than 150 mm in any dimension are satisfactory. Materials classified as SP-SM, GP-GM, or GM are also satisfactory provided that they contain moisture contents suitable for the intended use. Dark brown to black silty gravels (GM) with organics are satisfactory for open, seeded, or

turfed areas only provided the moisture contents are suitable for the intended use.

1.2.2 Unsatisfactory Materials

Materials which do not comply with the requirements for satisfactory materials are unsatisfactory. Materials classified in ASTM D 2487 as PT, OH, and OL are unsatisfactory. Unsatisfactory materials also include man-made fills, refuse, or backfills from previous construction or having moisture contents which are not suitable for the intended use. Depths of unsatisfactory materials are shown on the exploration logs.

1.2.3 Cohesionless and Cohesive Materials

Cohesive materials include materials classified as GC, SC, ML, CL, MH, and CH. Cohesionless materials include materials classified in ASTM D 2487 as GW, GP, SW, and SP. Materials classified as GM and SM will be identified as cohesionless only when the fines have a plasticity index of zero. Determination of grain size for classification will be made in conformance with ASTM C 117, ASTM C 136, or ASTM D 422.

1.2.4 Degree of Compaction

Degree of compaction is a percentage of the maximum density obtained by the test procedure presented in ASTM D 1557 abbreviated below as a percent of laboratory maximum density.

1.2.5 Topsoil

See SECTION: TURF.

1.3 SUBMITTALS

Government approval is required for submittals with a "GA" designation; submittals having an "FIO" designation are for information only. The following shall be submitted in accordance with Section 01300 SUBMITTAL PROCEDURES:

SD-09 Reports

Rock for Slope Protection; GA. Borrow Material; GA. Field in-Place Denisty Tests; GA.

Copies of all laboratory and field test reports within 24 hours of the completion of the test.

1.4 SUBSURFACE DATA

Subsurface soil exploration logs are shown on the drawings. This data represents the best subsurface information available; however, variations may exist in the subsurface between exploration locations.

PART 2 PRODUCTS

2.1 BORROW MATERIAL

Borrow material shall be selected to meet requirements and conditions of the particular fill for which it is to be used. Necessary clearing, grubbing, disposal of debris, and satisfactory drainage of borrow pits shall be

performed by the Contractor as incidental operations to the borrow excavation.

2.1.1 Selection

Borrow materials shall be obtained from sources within the limits of Government-controlled land, subject to approval. Borrow materials shall be subject to approval. Borrow material from approved sources on Government-controlled land may be obtained without payment of royalties. The source of borrow material shall be the Contractor's responsibility. Unless otherwise provided in the contract, the Contractor shall obtain from the owners the right to procure material, shall pay all royalties and other charges involved, and shall bear all the expense of developing the sources, including rights-of-way for hauling.

2.1.2 Borrow Pits

Except as otherwise permitted, borrow pits shall be excavated to afford adequate drainage. Overburden and other spoil material shall be disposed of or used for special purposes. The Contractor shall be responsible for maintaining the borrow sites. Maintenance is to include access road maintenance and dust control by watering. Overburden or other spoil materials pshall not be disposed of in such a manner as to cover satisfactory materials or interfere with subsequent borrow operations. Borrow pits shall be neatly trimmed with no dirt or rubble piles, and no excavated slopes steeper than 1-1/2 horizontal to 1 vertical, after borrow is completed.

PART 3 EXECUTION

3.1 CONSERVATION OF TOPSOIL

Topsoil shall be stored separate from other excavated materials and piled free of roots, stones, and other undesirable materials. Any surplus of topsoil from excavations and grading shall be removed from the site.

3.2 EXCAVATION

After topsoil removal has been completed, excavation of every description, regardless of material encountered, within the grading limits of the project shall be performed to the lines and grades indicated. Foundation materials under buildings and structures shall not be disturbed by heavy construction equipment or other traffic that may cause pumping or rutting of the foundation materials below indicated finish grade. The excavation shall be completed as quickly as possible to the design depth to protect the foundation soils from drying or infiltration of addition moisture. If the excavation is to remain open for more than 3 days for foundations or 7 days for paving areas, an impervious moisture barrier shall be applied to or cover the newly exposed surfaces of the excavation to prevent moisture content change of the foundation soils. This may consist of sprayed-on emulsion or cutback asphalt, white pigmented curing compound, or plastic sheeting. Sprayed-on asphalt or curing compound shall be applied at a rate of 0.5 liters per square meter over the entire surface of the subgrade including excavation backslopes, trenches, and foundation of structures. Satisfactory excavation material shall be transported to and placed in fill areas within the limits of the work. All unsatisfactory material including any soil which is disturbed by the Contractor's operations or softened due to exposure to the elements and water and surplus material shall be disposed of at locations indicated on the plans. Excavations carried below the depths indicated, without specific directions, shall, except as otherwise

specified, be refilled to the proper grade with satisfactory material as directed. All additional work of this nature shall be at the Contractor's expense. Excavation and filling shall be performed in a manner and sequence that will provide drainage at all times. Excavations shall be kept free from water while construction therein is in progress. Material required for fills in excess of that produced by excavation within the grading limits shall be obtained from borrow areas.

3.3 DITCHES, GUTTERS, AND CHANNEL CHANGES

Ditches, gutters, and channel changes shall be cut accurately to the cross sections and grades indicated. All roots, stumps, rock, and foreign matter in the sides and bottom of ditches, gutters, and channel changes shall be trimmed and dressed or removed to conform to the slope, grade, and shape of the section indicated. Care shall be taken not to excavate ditches and gutters below the grades indicated. Excessive ditch and gutter excavation shall be backfilled to grade either with satisfactory, thoroughly compacted material or with suitable stone or cobble to form an adequate gutter paving as directed. All ditches and gutters excavated under this section shall be maintained until final acceptance of the work. Satisfactory material excavated from ditches and channel changes shall be placed in fill areas. Unsatisfactory and excess excavated material shall be disposed of in accordance with directions in paragraph "EXCAVATION." No excavated material shall be deposited closer to the edges of the ditches than indicated and in no case less than 1 meter.

3.4 BACKFILL ADJACENT TO STRUCTURES

Backfill adjacent to structures shall be placed and compacted uniformly in such manner as to prevent wedging action or eccentric loading upon or against the structures. Slopes bounding or within areas to be backfilled shall be stepped or serrated to prevent sliding of the fill. During backfilling operations and in the formation of embankments, equipment that will overload the structure in passing over and compacting these fills shall not be used. Backfill for storm drains and subdrains, including the bedding and backfill for structures other than culverts and drains, shall conform to the additional requirements in other applicable sections.

3.5 PREPARATION OF GROUND SURFACE FOR FILL

All vegetation, such as roots, brush, heavy sods, heavy growth of grass, and all decayed vegetable matter, rubbish, and other unsatisfactory material within the area upon which fill is to be placed, shall be stripped or otherwise removed before the fill is started. Unsatisfactory material shall not remain in or under the fill area. Sloped ground surfaces steeper than one vertical to four horizontal on which fill is to be placed shall be plowed, stepped, or broken up, as directed, in such manner that the fill material will bond with the existing surface. Prepared surfaces on which compacted fill is to be placed shall be wetted or dried as may be required to obtain the specified moisture content and density.

3.6 FILLS AND EMBANKMENTS

Fills and embankments shall be constructed at the locations and to lines and grades indicated. The completed fill shall conform to the shape of the typical sections indicated or shall meet the requirements of the particular case. Satisfactory material obtained during excavation may be used in forming required fill. Fill shall be satisfactory material and shall be reasonably free from roots, other organic material, and trash and from stones having a maximum diameter greater than 150 mm. However, occasional

cobbles having sizes up to but not exceeding the lift thickness will be permitted provided that there are no pockets, lenses or concentrations of stone. Where such pockets, lenses or concentration of stone exist they shall be removed and replaced at the Contractors expense. No frozen material will be permitted in the fill. Stones having a dimension greater than 100 mm shall not be permitted in the upper 150 mm of fill or embankment. The material shall be placed in successive horizontal layers of 225 mm in loose depth for the full width of the cross section and shall be compacted as specified. Each layer shall be compacted before the overlaying lift is placed. Moisture content of the fill or backfill material shall be adjusted by wetting or aerating, as required.

3.7 FINISHED EXCAVATION, FILLS, AND EMBANKMENTS

All areas covered by the project, including excavated and filled sections and adjacent transition areas, shall be uniformly smooth-graded. The finished surface shall be reasonably smooth, compacted, and free from irregular surface changes. The degree of finish shall be that ordinarily obtainable from blade-grader operations, except as otherwise specified. Ditches and gutters shall be finished to permit adequate drainage. The surface of areas to be turfed shall be finished to a smoothness suitable for the application of turfing materials. For subgrade areas to be paved, the following shall be accomplished as required: (a) soft or otherwise unsatisfactory material shall be replaced with satisfactory excavated material or other approved materials; (b) low areas resulting from removal of unsatisfactory material or from excavation of rock shall be brought up to required grade with satisfactory materials, and the entire subgrade shall be shaped to line, grade, and cross section and shall be compacted as specified.

3.8 SUBGRADE PREPARATION FOR PAVEMENTS

Subgrade shall be shaped to line, grade, and cross section, and compacted as specified. This operation shall include plowing, disking, and any moistening or aerating required to obtain specified compaction. Unsatisfactory materials shall be removed up to a maximum depth of 750 mm measured from the top of the subgrade and replaced with satisfactory material. Low areas resulting from removal of unsatisfactory material shall be brought up to required grade with satisfactory materials, and the entire subgrade shall be shaped to line, grade, and cross section and compacted as specified.

3.9 PROTECTION

During construction, fills, embankments, and excavations shall be kept shaped and drained. Newly graded areas shall be protected from traffic and erosion, and any settlement or washing away that may occur from any cause, prior to acceptance, shall be repaired and grades reestablished to required elevations and slopes. All work shall be conducted in accordance with environmental protection requirements of the contract. Ditches and drains along subgrade shall be maintained in such a manner as to drain effectively at all times. The finished subgrade shall not be disturbed by traffic or other operation and shall be protected and maintained by the Contractor in a satisfactory condition until base course and pavement is placed. The storage or stockpiling of materials on the finished subgrade will not be permitted. No base course shall be laid until the subgrade has been checked and approved, and in no case shall base be placed on a muddy, spongy, or frozen subgrade.

3.10 COMPACTION

Each layer of the fill or embankment and subgrade shall be compacted to at least the percent of laboratory maximum density specified below:

	Percent Laboratory Maximum density	
	Cohesive material	Cohesionless material
<u>Fill, embankment, and backfill</u>		
Under pavements and shoulders	90	95
Under non-paved areas	85	90
<u>Subgrade</u>		
Under pavements and shoulders, to a depth of at least 150 mm below the subgrade surface.	90	95

Compacted subgrades, fills, embankments, and backfills, that are distributed by the Contractor's operations or by adverse weather before acceptance by the Contracting Officer shall be scarified and compacted at the specified moisture content to the required density before the continuation of construction. Any field density test results indicating the density does not meet specifications shall be followed immediately with a second field density test and a corresponding laboratory quality control test at no additional cost to the Government. The location of the second field density test shall be in the same lift and within 3 meters of the first test. Should the second field density test also indicate insufficient density, filling or backfilling shall cease in the affected area until all deficiencies have been correction. Inadequate materials shall be removed, reworked, or replaced, compacted and tested at no additional cost to the Government. Recompaction over underground utilities shall be by hand tampering. Compaction requirements in trenches shall conform to applicable portions of SECTION: EXCAVATION, TRENCHING, AND BACKFILLING FOR UTILITIES SYSTEMS.

3.11 FIELD TESTING CONTROL

Testing shall be the responsibility of the Contractor and shall be performed by an approved commercial testing laboratory. Testing facilities and personnel shall meet the requirements of ASTM D 3740 and SECTION: 01400, CONTRACTOR QUALITY CONTROL. Field in- place density shall be determined in accordance with ASTM D 1556 or ASTM D 2167. Moisture-density relations shall be determined in accordance with ASTM D 1557. The minimum number of tests, acceptable for each type of operation shall be in accordance with SECTION: CONTRACTOR QUALITY CONTROL.

3.12 PROTECTION

Newly graded areas shall be protected from traffic and from erosion, and any settlement or washing away that may occur from any cause, prior to acceptance, shall be repaired and grades reestablished to the required elevations and slopes. All work shall be conducted in accordance with the environmental protection requirements of the contract.

END OF SECTION

SECTION 02221

EXCAVATION, FILLING AND BACKFILLING FOR BUILDINGS

PART 1 GENERAL

1.1 REFERENCES

The publications listed below form a part of this specification to the extent referenced. The publications are referred to in the text by basic designation only.

AMERICAN SOCIETY FOR TESTING AND MATERIALS (ASTM)

ASTM C 117	(1995) Materials Finer than 75- micrometer (um) (No. 200) Sieve in Mineral Aggregates by Washing
ASTM C 136	(1996) Sieve Analysis of Fine and Coarse Aggregates
ASTM D 422	(1963, R 1990) Particle-Size Analysis of Soils
ASTM D 1556	(1990, R 1996) Density of Soil in Place by the Sand-Cone Method
ASTM D 1557	(1991) Moisture-Density Relations of Soils and Soil-Aggregate Mixtures Using 4.54-kilogram (kg)(10-lb) Rammer and 457-mm (18-in.) Drop
ASTM D 2167	(1994) Density and Unit Weight of Soil in Place by the Rubber Balloon Method
ASTM D 2216	(1992) Laboratory Determination of Water (Moisture) Content of Soil, Rock, and Soil-Aggregate Mixtures
ASTM D 2217	(1985) Wet Preparation of Soil Samples for Particle-Size Analysis and Determination of Soil Constants
ASTM D 2487	(1993) Standard Classification of Soils for Engineering Purposes (Unified Soil Classification System)
ASTM D 3740	(1996) Standard Practice for Minimum Requirements for Agencies Engaged in the Testing and/or Inspection of Soil and Rock as Used in Engineering Design and Corstruction
ASTM D 4318	(Rev. A, 1995) Liquid Limit, Plastic Limit, and Plasticity Index of Soils

1.2 DEFINITIONS

1.2.1 Degree of Compaction

Degree of compaction required is expressed as a percentage of the maximum density obtained by the test procedure presented in ASTM D 1557 abbreviated hereinafter as percent laboratory maximum density.

1.3 SUBMITTALS

Government approval is required for submittals with a "GA" designation; submittals having an "FIO" designation are for information only. The following shall be submitted in accordance with Section 01300 SUBMITTAL PROCEDURES:

SD-01 Data

Borrow Material; GA. Capillary Water Barrier; GA.

Copies of all laboratory and field test reports within 24 hours of the completion of the test.

1.4 SUBSURFACE DATA

Subsurface soil exploration logs are shown on the drawings. This data represents the best subsurface information available; however, variations may exist in the subsurface between explorations locations.

PART 2 PRODUCTS

2.1 MATERIALS

2.1.1 Satisfactory Materials

Satisfactory materials include materials classified in ASTM D 2487 as GW, GP, SW, and SP. Materials classified as SP-SM or GP-GM are also satisfactory provided that they contain a moisture content suitable for the intended use. Materials shall be free of trash, debris, roots or other organic matter, or stones larger than 75 millimeters in any dimension.

2.1.2 Unsatisfactory Materials

Unsatisfactory materials include materials classified in ASTM D 2487 as PT, OH, OL, CL, ML and GM, and any other materials not defined as satisfactory. Unsatisfactory materials include but are not limited to those materials containing roots and other organic matter, trash, debris, frozen materials and stones larger than 75 mm. Minimum depths of unsatisfactory materials to be excavated under buildings and structures are indicated on foundation boring logs. The black silty sandy gravels (GM) shown on exploration logs are unsatisfactory.

2.1.3 Cohesionless and Cohesive Materials

Cohesionless materials include materials classified in ASTM D 2487 as GW, GP, SW, and SP. Cohesive materials include materials classified as GC, SC, ML, CL, MH, and CH. Materials classified as GM and SM will be identified as cohesionless only when the fines are nonplastic. Liquid limit and plasticity index shall be determined in accordance with ASTM D 4318 using ASTM D 2217, Procedure B. Determination of grain size for classification will be made in conformance with ASTM C 117, C 136, or D 422.

2.1.4 Capillary Water Barrier

Capillary Water Barrier shall consist of clean, crushed, nonporous rock, crushed gravel, or uncrushed gravel. The maximum particle size shall be 38 mm and no more than 2 percent by weight shall pass the 4.75 mm size sieve.

PART 3 EXECUTION

3.1 CLEARING AND GRUBBING

Clearing and grubbing is specified in SECTION: CLEARING AND GRUBBING

3.2 TOPSOIL

Topsoil or material suitable for processing to make topsoil at the Contractor’s option shall be stripped to a depth of 75 mm below existing grade within the designated excavations and grading lines and deposited in storage piles for later use. Excess topsoil shall be disposed as specified for excess excavated material.

3.3 EXCAVATION

Excavation shall conform to the dimensions and elevations indicated for each building, structure, and footing except as specified hereinafter, and shall include trenching for utility and foundation drainage systems to a point 1.5 meters beyond the building line of each building and structure, and all work incidental thereto. Excavation shall extend a sufficient distance from walls and footings to allow for placing and removal of forms. All unsatisfactory materials shall be removed from under building footings, structures with footings, and up to a maximum depth of 750 mm measured from the top of the subgrade under pavements and replaced with satisfactory materials. Depths of unsatisfactory materials are indicated on the exploration logs.~~]~~

During excavation and construction operations foundation materials under buildings and structures shall not be disturbed by heavy construction equipment or other traffic that may cause pumping or rutting of the foundation materials below indicated finish grade. All material disturbed or softened by the Contractor's operations shall be removed, disposed, and replaced with satisfactory materials at the Contractor's expense. ~~The excavation shall be completed as quickly as possible to the design depth to protect the foundation soils from drying or infiltration of additional moisture. If the excavation is to remain open for more than 3 days for foundations or 7 days for paving areas, an impervious moisture barrier shall be applied to the newly exposed surfaces of the excavation to prevent moisture content change of the foundation soils. This may consist of sprayed-on emulsion or cutback asphalt, white pigmented curing compound, or plastic sheeting. Sprayed-on asphalt or curing compound shall be applied at a rate of 0.5 liters per square meter over the entire surface of the subgrade including excavation backslopes, trenches, and foundation of structures. Sides of the excavation shall be constructed on a 1 vertical on 1 horizontal slope or an appropriate angle that will not transmit intolerable swelling pressures from the expansive soil to the foundation. The foundation shall be constructed in the excavation as quickly as practical. To minimize movement due to moisture changes in the expansive soils, the structure shall be founded on spread footings with overexcavation under footings of 600 mm in both depth and width and replacement with a pad of nonswelling, low permeable material~~

Excavations below indicated depths will not be permitted except to remove unsatisfactory material. Unsatisfactory material encountered below the grades shown shall be removed as directed and replaced with satisfactory material. In the event that it is necessary to remove unsatisfactory material to a depth greater than specified, the Contracting Officer shall be notified and an adjustment in the contract price will be considered in accordance with the contract. Satisfactory material removed below the depths indicated without specific direction of the Contracting Officer shall be replaced at no additional cost to the Government to the indicated excavation grade with satisfactory materials, except that concrete footings shall be increased in thickness to the bottom of the overdepth excavations. Satisfactory material shall be placed and compacted as specified in paragraph FILLING AND BACKFILLING. Determination of elevations and measurements of approved overdepth excavation of unsatisfactory material below grades indicated shall be done under the direction of the Contracting Officer.

3.4 DRAINAGE AND DEWATERING

3.4.1 Drainage

shall be directed away from excavation and construction sites so as to prevent erosion and undermining of foundations. Diversion ditches, dikes and grading shall be provided and maintained as necessary during construction. Excavated slopes and backfill surfaces shall be protected to prevent erosion and sloughing. Excavation shall be performed so that the site and the area immediately surrounding the site and affecting operations at the site shall be continually and effectively drained.

3.4.2 Dewatering

Groundwater flowing toward or into excavations shall be controlled to prevent sloughing of excavation slopes and walls, boils, uplift and heave in the excavation and to eliminate interference with orderly progress of construction. French drains, sumps, ditches or trenches will not be permitted within 900 mm of the foundation of any structure, except with specific written approval, and after specific contractual provisions for restoration of the foundation area have been made. Control measures shall be taken by the time the excavation reaches the water level in order to maintain the integrity of the in situ material. While the excavation is open, the water level shall be maintained continuously, at least 600 mm below the working level. The excavation shall be drained by pumping or other satisfactory methods to prevent softening of the foundation bottom, undercutting of footings, or other actions detrimental to proper construction procedures. Ground water shall not be permitted to accumulate in excavations and shall be dewatered by pumping or other satisfactory methods to prevent detrimental effects to proper construction procedures. Disposal of pumped ground water shall be by pumping into a Contractor-designed dry well or sump system, and discharge of water into existing surface waters will not be permitted due to environmental effects. Operate the dewatering system continuously, 24 hours per day, 7 days per week until such time as construction work below existing water levels is complete, unless directed otherwise. Measure and record the performance of the dewatering system at the same time each day by use of suitable observation wells or piezometers installed in conjunction with the dewatering system. After placement of structures or pipes and backfill, the water level may rise but at no time higher than 600 mm below the prevailing level of excavation or backfill, or 600 mm below the level which would cause flotation of incompletely backfilled structures or pipelines, whichever is

lower. Before starting work submit a dewatering plan describing the basic components of the dewatering system proposed and its planned method of operation. Submit the dewatering performance records weekly.

3.5 SHORING

Shoring, including sheet piling, shall be furnished and installed as necessary to protect workmen, banks, adjacent paving, structures, and utilities. Shoring, bracing, and sheeting shall be removed as excavations are backfilled, in a manner to prevent caving.

3.6 CLASSIFICATION OF EXCAVATION

Excavation will be unclassified regardless of the nature of material encountered.

3.7 BLASTING

Blasting will not be permitted.

3.8 UTILITY AND DRAIN TRENCHES

Trenches for underground utilities systems and drain lines shall be excavated to the required alignments and depths. The bottoms of trenches shall be graded to secure the required slope and shall be tamped if necessary to provide a firm pipe bed. Recesses shall be excavated to accommodate bells and joints so that pipe will be uniformly supported for the entire length. Rock, where encountered, shall be excavated to a depth of at least 150 mm below the bottom of the pipe, and the overdepth shall be backfilled with satisfactory material placed and compacted in conformance with paragraph FILLING AND BACKFILLING.

3.9 BORROW

Where satisfactory materials are not available in sufficient quantity from required excavations, approved materials shall be obtained as specified in SECTION: GRADING (EARTHWORK).

3.10 EXCAVATED MATERIALS

Satisfactory excavated material required for fill or backfill shall be placed in the proper section of the permanent work required under this section or shall be separately stockpiled if it cannot be readily placed. Satisfactory excavated materials shall not be mixed with unsatisfactory materials. Satisfactory material in excess of that required for the permanent work and all unsatisfactory material shall be disposed of as specified in SECTION: GRADING (EARTHWORK). Unsatisfactory materials shall not cover available suitable materials.

3.11 FINAL GRADE OF SURFACES TO SUPPORT CONCRETE

Excavation to final grade shall not be made until just before concrete is to be placed. Approximately level surfaces shall be roughened, and sloped surfaces shall be cut as indicated into rough steps or benches to provide a satisfactory bond.

3.12 SUBGRADE PREPARATION

Unsatisfactory material in surfaces to receive fill or in excavated areas shall be removed and replaced with satisfactory materials. The surface

shall be scarified to a depth of 150 mm before the fill is started. Sloped surfaces steeper than 1 vertical to 4 horizontal shall be plowed, stepped, benched, or broken up so that the fill material will bond with the existing material. When subgrades are less than the specified density, the ground surface shall be broken up to a minimum depth of 150 mm, pulverized, and compacted to the specified density. When the subgrade is part fill and part excavation or natural ground, the excavated or natural ground portion shall be scarified to a depth of 300 mm and compacted as specified for the adjacent fill. Material shall not be placed on surfaces that are muddy, frozen, or contain frost. Compaction shall be accomplished by sheepsfoot rollers, pneumatic-tired rollers, steel-wheeled rollers, or other approved equipment well suited to the soil being compacted. Material shall be moistened or aerated as necessary to provide the moisture content that will readily facilitate obtaining the specified compaction with the equipment used. Minimum subgrade density shall be as specified in paragraph FILLING AND BACKFILLING.

3.13 FILLING AND BACKFILLING

Satisfactory materials shall be used in bringing fills and backfills to the lines and grades indicated and for replacing unsatisfactory materials. Occasional cobbles having sizes up to but no exceeding the lift thickness will be permitted provided that there are no pockets, lenses or concentration of stones. Where such pockets, lenses or concentration of stones exist they shall be removed and replaced at the Contractor's expense. Satisfactory materials shall be placed in horizontal layers not exceeding 225 mm in loose thickness, or 150 mm when hand-operated compactors are used. After placing, each layer shall be plowed, disked, or otherwise broken up, moistened or aerated as necessary, thoroughly mixed and compacted as specified. Backfilling shall not begin until construction below finish grade has been approved, underground utilities systems have been inspected, tested and approved, forms removed, and the excavation cleaned of trash and debris. Backfill shall be brought to indicated finish grade. Backfill shall not be placed in wet or frozen areas. Heavy equipment for spreading and compacting backfill shall not be operated closer to foundation or retaining walls than a distance equal to the height of backfill above the top of footing; the area remaining shall be compacted in layers not more than 100 mm in compacted thickness with power-driven hand tampers suitable for the material being compacted. Backfill shall be placed carefully around pipes or tanks to avoid damage to coatings, wrappings, or tanks. Backfill shall not be placed against foundation walls prior to 7 days after completion of the walls. As far as practicable, backfill shall be brought up evenly on each side of the wall and sloped to drain away from the wall. Each layer of fill and backfill shall be compacted to not less than the percentage of maximum density specified below:

	Percent Laboratory Maximum Density	
	Cohesive Material	Cohesionless Material
Fill, embankment, and backfill		
Under structures, building slabs, steps, paved areas, around footings, and in trenches	90	95
Under sidewalks and grassed areas	85	90
Subgrade		

Under building slabs, steps, and paved areas, top 300 mm	90	95
Under sidewalks, top 150 mm	85	90

Approved compacted subgrades that are disturbed by the Contractor's operations or adverse weather shall be scarified and compacted as specified herein before to the required density prior to further construction thereon. Recompaction over underground utilities and heating lines shall be by hand tamping.

Compacted subgrades, fills, embankments, and backfills, that are distributed by the Contractor's operations or by adverse weather before acceptance by the Contracting Officer shall be scarified and compacted at the specified moisture content to the required density before the continuation of construction. Any field density test results indicating the density does not meet specifications shall be followed immediately with a second field density test and a corresponding laboratory quality control test at no additional cost to the Government. The location of the second field density test shall be in the same lift and within 3 meters of the first test. Should the second field density test also indicate insufficient density, filling or backfilling shall cease in the affected area until all deficiencies have been correction. Inadequate materials shall be removed, reworked, or replaced, compacted and tested at no additional cost to the Government. Recompaction over underground utilities and heating lines shall be by hand tampering. Compaction requirements in trenches shall conform to applicable portions of SECTION: EXCAVATION, TRENCHING, AND BACKFILLING FOR UTILITIES SYSTEMS.

3.15 TESTING

Testing shall be the responsibility of the Contractor and shall be performed at no additional cost to the Government. Testing shall be performed by an approved commercial testing laboratory. Testing facilities and personnel shall meet the requirements of ASTM D 3740 and SECTION: CONTRACTOR QUALITY CONTROL. Field in- place density shall be determined in accordance with ASTM D 1556 or ASTM D 2167. Moisture-density relations shall be determined in accordance with ASTM D 1557. The minimum number of tests, acceptable for each type of operation shall be in accordance with SECTION: CONTRACTOR QUALITY CONTROL.

The following number of tests, if performed at the appropriate time, shall be the minimum acceptable for each type operation.

3.15.1 In-Place Densities

3.15.1.1 In-Place Density of Subgrades

One test per 1,200 square meter or fraction thereof.

3.15.1.2 In-Place Density of Fills and Backfills

One test per 100-square meter or fraction thereof of each lift for fill or backfill areas compacted by other than hand or hand-operated machines. The density for each lift of fill or backfill materials for trenches, pits, building perimeters or other structures or areas less than 40 meters in width, which are compacted with hand or hand-operated machines shall be tested as follows: One test per each area less than 100 square meters or one test for each 40-linear meter of long narrow fills 40 meters more in length.

3.15.2 Moisture Content

In the stockpile, excavation or borrow areas, a minimum of two tests per day per type of material or source of materials being placed is required during stable weather conditions. During unstable weather, tests shall be made as dictated by local conditions and approved moisture content shall be tested in accordance with ASTM D 2216.

3.15.3 Optimum Moisture and Laboratory Maximum Density

Tests shall be made for each type material or source of material including borrow material to determine the optimum moisture and laboratory maximum density values. One representative test per 10-cubic meter of fill and backfill, or when any change in material occurs which may affect the optimum moisture content or laboratory maximum density will be made.

3.15.4 Standard Penetration Tests

[Tests shall be performed at the specified depths at intervals of 10 meters and at the specified locations.

3.16 CAPILLARY WATER BARRIER

Capillary water barrier under concrete floor and area-way slabs on grade shall be placed directly on the subgrade and shall be compacted with a minimum of two passes of a hand-operated plate-type vibratory compactor.

3.17 GRADING

Areas within 1500 mm outside of each building and structure line shall be constructed true-to-grade, shaped to drain, and shall be maintained free of trash and debris until final inspection has been completed and the work has been accepted.

3.18 SPREADING TOPSOIL

See SECTION: TURF.

3.19 PROTECTION

Settlement or washing that occurs in graded, topsoiled, or backfilled areas prior to acceptance of the work shall be repaired and grades reestablished to the required elevations and slopes.

END OF SECTION

SECTION 02222

EXCAVATION, TRENCHING, AND BACKFILLING FOR UTILITIES SYSTEMS

PART 1 GENERAL

1.1 REFERENCES

The publications listed below form a part of this specification to the extent referenced. The publications are referred to in the text by basic designation only.

AMERICAN SOCIETY FOR TESTING AND MATERIALS (ASTM)

ASTM C 117	(1995) Materials Finer than 75- micrometer (um) (No. 200) Sieve in Mineral Aggregates by Washing
ASTM C 136	(1996) Sieve Analysis of Fine and Coarse Aggregates
ASTM D 422	(1963, R 1990) Particle-Size Analysis of Soils
ASTM D 1556	(1990, R 1996) Density of Soil in Place by the Sand-Cone Method
ASTM D 1557	(1991) Moisture-Density Relations of Soils and Soil-Aggregate Mixtures Using 4.54-kilogram (kg)(10-lb) Rammer and 457-mm (18-in.) Drop
ASTM D 2167	(1994) Density and Unit Weight of Soil in Place by the Rubber Balloon Method
ASTM D 2216	(1992) Laboratory Determination of Water (Moisture) Content of Soil, Rock, and Soil-Aggregate Mixtures
ASTM D 2217	(1985) Wet Preparation of Soil Samples for Particle-Size Analysis and Determination of Soil Constants
ASTM D 2487	(1993) Standard Classification of Soils for Engineering Purposes (Unitified Soil Classification System)
ASTM D 2922	(1991) Density of Soil and Soil-Aggregate in Place by Nuclear Methods (Shallow Depth)
ASTM D 3017	(1996) Water Content of Soil and Rock in Place by Nuclear Methods (Shallow Depth)

ASTM D 3740	(1996) Standard Practice for Minimum Requirements for Agencies Engaged in the Testing and/or Inspection of Soil and Rock as Used in Engineering Design and Corstruction
ASTM D 4318	(Rev. A, 1995) Liquid Limit, Plastic Limit, and Plasticity Index of Soils

U.S. Army Corps of Engineers Manual

EM 385-1-1	Safety and Health Requirements

1.2 DEFINITIONS

1.2.1 Degree of Compaction

Degree of compaction shall be expressed as a percentage of the maximum density obtained by the test procedure presented in ASTM D 1557.

1.3 SUBMITTALS

Government approval is required for submittals with a "GA" designation; submittals having an "FIO" designation are for information only. The following shall be submitted in accordance with Section 01300 SUBMITTAL PROCEDURES:

SD-09 Reports

Field Density Tests; GA. Testing of Backfill Materials; GA.

Copies of all laboratory and field test reports within 24 hours of the completion of the test.

PART 2 PRODUCTS

2.1 MATERIALS

2.1.1 Satisfactory Materials

Satisfactory materials shall consist of any material classified by ASTM D 2487 as GW, GP, SP, and SW. Materials classified as SP-SM, GP-GM, or GM are also satisfactory provided that they contain moisture content suitable for the intended use. The black (with organic materials) silty sandy gravels (GM) are satisfactory for use as final backfill in open, turfed or seeded areas only providing they contain moisture contents suitable for the intended use.

2.1.2 Unsatisfactory Materials

Unsatisfactory materials shall be materials that do not comply with the requirements for satisfactory materials. Unsatisfactory materials include but are not limited to those materials containing roots and other organic matter, trash, debris, frozen materials and stones larger than 75 mm, and materials classified in ASTM D 2487, as PT, OH, and OL. Unsatisfactory materials also include man-made fills, refuse, or backfills from previous construction.

2.1.3 Cohesionless and Cohesive Materials

Cohesionless materials shall include materials classified in ASTM D 2487 as GW, GP, SW, and SP. Cohesive materials include materials classified as GC, SC, ML, CL, MH, and CH. Materials classified as GM and SM will be identified as cohesionless only when the fines are nonplastic. Liquid limit and plasticity index shall be determined in accordance with ASTM D 4318 using ASTM D 2217, Procedure B. Determination of grain size for classification will be made in conformance with ASTM C 117, ASTM C 136, or ASTM D 422.

2.1.4 Unyielding Material

Unyielding material shall consist of rock and gravelly soils with stones greater than 75 mm in any dimension or as defined by the pipe manufacturer, whichever is smaller.

2.1.5 Unstable Material

Unstable material shall consist of materials too wet to properly support the utility pipe, conduit, or appurtenant structure.

2.1.6 Select Granular Material

Select granular material shall consist of well-graded sand, gravel, crushed gravel, crushed stone or crushed slag composed of hard, tough and durable particles, and shall contain not more than 10 percent by weight of material passing a 0.075 mm mesh sieve and no less than 95 percent by weight passing the 25 mm sieve. The maximum allowable aggregate size shall be 75 mm or the maximum size recommended by the pipe manufacturer, whichever is smaller.

2.1.7 Initial Backfill Material

Initial backfill shall consist of select granular material or satisfactory materials free from rocks 50 mm or larger in any dimension or free from rocks of such size as recommended by the pipe manufacturer, whichever is smaller.

2.1.8 Plastic Marking Tape

Plastic marking tape shall be acid and alkali-resistant polyethylene film, 150 mm wide with minimum thickness of 0.1 mm. Tape shall have a minimum strength of 12 megapascals (MPa) lengthwise and 10.3 MPa crosswise. The tape shall be manufactured with integral wires, foil backing or other means to enable detection by a metal detector when the tape is buried up to 900 mm deep. The tape shall be of a type specifically manufactured for marking and locating underground utilities. The metallic core of the tape shall be encased in a protective jacket or provided with other means to protect it from corrosion. Tape color shall be as specified in TABLE 1 and shall bear a continuous printed inscription describing the specific utility.

TABLE 1. Tape Color

Red:	Electric
Yellow:	Gas, Oil, Dangerous Materials
Orange:	Telephone, Telegraph, Television, Police, and Fire Communications
Blue:	Water Systems
Green:	Sewer Systems

2.1.9 BORROW MATERIAL

Where satisfactory materials are not available in sufficient quantity from required excavations, approved material shall be obtained as specified in SECTION: GRADING (EARTHWORK).

PART 3 EXECUTION

3.1 EXCAVATION

Excavation of every description and of whatever substances encountered shall be performed to the lines and grades indicated. Excavation shall be unclassified. During excavation, material satisfactory for backfilling shall be stockpiled in an orderly manner at a distance from the banks of the trench equal to 1/2 the depth of the excavation, but in no instance closer than 600 mm. Excavated material not required or not satisfactory for backfill shall be removed from the site and shall be disposed of as specified in SECTION: GRADING (EARTHWORK). The Contractor shall be responsible for disposal of materials. Unsatisfactory materials shall not cover available suitable materials. Grading shall be done as may be necessary to prevent surface water from flowing into the excavation, and any water accumulating therein shall be removed to maintain the stability of the bottom and sides of the excavation. Unauthorized overexcavation shall be backfilled in accordance with paragraph BACKFILLING at no additional cost to the Government.

3.1.1 Trench Excavation

The trench shall be excavated as recommended by the manufacturer of the pipe to be installed. Trench walls below the top of the pipe shall be sloped, or made vertical, and of such width as recommended in the manufacturer's installation manual. Where no manufacturer's installation manual is available, trench walls shall be excavated to a stable angle of repose as required to properly complete the work. The excavation shall be completed as quickly as possible to the design depth to protect the foundation soils from drying or infiltration of additional moisture. If the excavation is to remain open for more than 3 days for foundations or 7 days for paving areas, an impervious moisture barrier shall be applied to the newly exposed surfaces of the excavation to prevent moisture content change of the foundation soils. This may consist of sprayed-on emulsion or cutback asphalt, white pigmented curing compound, or plastic sheeting. Sprayed-on asphalt or curing compound shall be applied at a rate of 0.5 liters per square meter over the entire surface of the subgrade including excavation backslopes, trenches, and foundation of structures. Trench excavations shall adhere to requirements prescribed in EM 385-1-1, Safety and Health Requirements Manual. Special attention shall be given to slopes which may be adversely affected by weather or moisture content. The trench width below the top of pipe shall not exceed 600 mm plus pipe outside diameter (O.D.) for pipes of less than 600 mm inside diameter and shall not exceed 900 mm plus pipe outside diameter for sizes larger than 600 mm inside diameter. Where recommended trench widths are exceeded, redesign, stronger pipe, or special installation procedures shall be utilized by the Contractor. The cost of redesign, stronger pipe, or special installation procedures shall be borne by the Contractor without any additional cost to the Government.

3.1.1.1 Bottom Preparation

The bottoms of trenches shall be accurately graded to provide uniform bearing and support for the bottom quadrant of each section of the pipe. Bell holes shall be excavated to the necessary size at each joint or coupling to eliminate point bearing. Stones of 75 mm or greater in any dimension, or as recommended by the pipe manufacturer, whichever is smaller, shall be removed to avoid point bearing.

3.1.1.2 Removal of Unyielding Material

Where overdepth is not indicated and unyielding material is encountered in the bottom of the trench, such material shall be removed 100 mm below the required grade and replaced with suitable materials as provided in paragraph BACKFILLING.

3.1.1.3 Removal of Unstable Material

Where unstable material is encountered in the bottom of the trench, such material shall be removed to the depth directed and replaced to the proper grade with select granular material as provided in paragraph BACKFILLING. When removal of unstable material is required due to the fault or neglect of the Contractor in his performance of the work, the resulting material shall be excavated and replaced by the Contractor without additional cost to the Government.

3.1.1.4 Excavation for Appurtenances

Excavation for manholes, catch-basins, inlets, or similar structures shall be sufficient to leave at least 300 mm clear between the outer structure surfaces and the face of the excavation or support members. Removal of unstable material shall be as specified above. When concrete or masonry is to be placed in an excavated area, special care shall be taken not to disturb the bottom of the excavation. Excavation to the final grade level shall not be made until just before the concrete or masonry is to be placed.

3.1.1.5 Jacking, Boring, and Tunneling

Unless otherwise indicated, excavation shall be by open cut except that sections of a trench may be jacked, bored, or tunneled if, in the opinion of the Contracting Officer, the pipe, cable, or duct can be safely and properly installed and backfill can be properly compacted in such sections. Jacking, boring or tunneling, and the pipe, cable or duct can be safely and properly installed and backfill can be properly compacted in such sections.

3.1.1.6 Stockpiles

Stockpiles of satisfactory, unsatisfactory and wasted materials shall be placed and graded as specified. Stockpiles shall be kept in a neat and well drained condition, giving due consideration to drainage at all times.

The ground surface at stockpile locations shall be cleared, grubbed, and sealed by rubber-tired equipment, excavated satisfactory and unsatisfactory materials shall be separately stockpiled. Stockpiles of satisfactory materials shall be protected from contamination which may destroy the quality and fitness of the stockpiled material. If the Contractor fails to protect the stockpiles, and any material becomes unsatisfactory, such material shall be removed and replaced with satisfactory material from approved sources at no additional cost to the Government. Locations of

stockpiles of satisfactory materials shall be subject to prior approval of the Contracting Officer.

3.2 BACKFILLING

Backfill material shall consist of satisfactory material, select granular material, or initial backfill material as required. Backfill shall be placed in layers not exceeding 150 mm loose thickness for compaction by hand operated machine compactors, and 200 mm loose thickness for other than hand operated machines, unless otherwise specified. Each layer shall be compacted to at least 95 percent maximum density for cohesionless soils and 90 percent maximum density for cohesive soils, unless otherwise specified. The first 150 mm of backfill material directly above PVC or copper pipes shall not be compacted. The backfill shall be brought up evenly on both sides of the pipe for the full length. Care shall be taken to ensure thorough compaction of the full under the haunch of the pipe. Material required for backfills in excess of that produced by excavation shall be obtained from borrow areas.

3.2.1 Trench Backfill

Trenches shall be backfilled to the grade shown. The trench shall not be backfilled until all specified tests are performed.

3.2.1.1 Replacement of Unyielding Material

Unyielding material removed from the bottom of the trench shall be replaced with select granular material or initial backfill material.

3.2.1.2 Replacement of Unstable Material

Unstable material removed from the bottom of the trench or excavation shall be replaced with select granular material placed in layers not exceeding 150 mm loose thickness.

3.2.1.3 Bedding and Initial Backfill

Bedding shall be of the type and thickness shown. Bedding shall be clean, sand-gravel mixture free from organic matter and conforming to the following gradation when tested in accordance with ASTM D 422.

U.S. Standard Sieve Size	Percent Passing
25 mm	100
4.75 mm	25-80
0.075 mm	0-10

Initial backfill material shall be placed and compacted with approved tampers to a height of at least one foot above the utility pipe or conduit. The backfill shall be brought up evenly on both sides of the pipe for the full length of the pipe. Care shall be taken to ensure thorough compaction of the fill under the haunches of the pipe. Backfill material in this portion of the trench shall consist of satisfactory material at a moisture content that will facilitate compaction, free from stones of such size as recommended by the pipe manufacturer, or larger than 50 mm in any dimension, whichever is smaller, except that where the pipe is coated or wrapped for protection against corrosion, the backfill material shall be free of stones

larger than 50 mm in any dimension or as recommended by the pipe manufacturer, whichever is smaller.

3.2.1.4 Final Backfill

The remainder of the trench, except for special materials for roadways, railroads and airfields, shall be filled with satisfactory material. Backfill material shall be placed and compacted as follows:

3.2.1.4.1 Roadways, Railroads, and Parking Lots

Backfill shall be placed up to the elevation at which the requirements in SECTION: GRADING (EARTHWORK) control. Water flooding or jetting methods of compaction will not be permitted.

3.2.1.4.2 Sidewalks, Turfed or Seeded Areas and Miscellaneous Areas

Backfill shall be deposited in layers of a maximum of 300 mm loose thickness, and compacted to 85 percent maximum density for cohesive soils and 90 percent maximum density for cohesionless soils. Compaction by water flooding or jetting will not be permitted. This requirement shall also apply to all other areas not specifically designated above.

3.2.2 Backfill for Appurtenances

After the manhole, catchbasin, inlet, or similar structure has been constructed, backfill shall be placed in such a manner that the structure will not be damaged by the shock of falling earth. The backfill material shall be deposited and compacted as specified for final backfill, and shall be brought up evenly on all sides of the structure to prevent eccentric loading and excessive stress.

3.3 SPECIAL REQUIREMENTS

Special requirements for both excavation and backfill relating to the specific utilities are as follows:

3.3.1 Gas Distribution

Trenches shall be excavated to a depth that will provide not less than 450 mm of cover in rock excavation and not less than 600 mm of cover in other excavation. Trenches shall be graded as specified for pipe-laying requirements in Section 02685 GAS DISTRIBUTION SYSTEM.

3.3.2 Water Lines

Trenches shall be of a depth to provide a minimum cover of 900 mm from the existing ground surface, or from the indicated finished grade, whichever is lower, to the top of the pipe.

3.3.3 Electrical Distribution System

Direct burial cable and conduit or duct line shall have a minimum cover of 600 mm from the finished grade, unless otherwise indicated. Special trenching requirements for direct-burial electrical cables and conduits are specified in SECTION: ELECTRICAL DISTRIBUTION SYSTEM, UNDERGROUND.

3.3.4 Plastic Marking Tape

Warning tapes shall be installed directly above the pipe, at a depth of 450 mm below finished grade unless otherwise shown.

3.4 TESTING

Testing shall be the responsibility of the Contractor and shall be performed at no additional cost to the Government. Number of tests shall be in accordance with SECTION: CONTRACTOR QUALITY CONTROL.

3.4.1 Testing Facilities

Tests shall be performed by an approved commercial testing laboratory Approval of testing facilities and personnel shall be based on compliance with ASTM D 3740 and in accordance with SECTION: CONTRACTOR QUALITY CONTROL.

3.4.2 Testing of Backfill Materials

Characteristics of backfill materials shall be determined in accordance with particle size analysis of soils ASTM D 422 and laboratory tests for moisture-density relations of soils in accordance with ASTM D 1557. A minimum of one particle size analysis and one moisture-density relation test shall be performed on each different type of material used for bedding and backfill. A mechanical tamper may be used, provided the results are correlated with those obtained by the referenced hand tamper or ASTM D 1557. Field in-place density shall be determined in accordance with ASTM D 1556 or D 2167. Trenches improperly compacted shall be reopened to the depth directed, then refilled and compacted to the density specified at no additional cost to the Government.

3.4.3 Field Density Tests

Tests shall be performed in sufficient numbers to ensure that the specified density is being obtained. A minimum of one field density test per lift of backfill for every 150 meters of installation shall be performed. One moisture density relationship shall be determined for every 1200 cubic meters of material used. Field in-place density shall be determined in accordance with ASTM D 1556, ASTM D 2167 and ASTM D 2922. When ASTM D 2922 is used, the calibration curves shall be checked and adjusted using the sand cone method (ASTM D 1556) as described in paragraph Calibration of the ASTM publication. ASTM D 2922 results in a wet unit weight of soil and when using this method, ASTM D 3017 shall be used to determine the moisture content of the soil. The calibration curves furnished with the moisture gauges shall be checked along with density calibration checks as described in ASTM D 3017. The calibration checks of both the density and moisture gauges shall be made at the beginning of a job, on each different type of material encountered, at intervals as directed by the Contracting Officer. Copies of calibration curves, results of calibration tests, and field and laboratory density tests shall be furnished to the Contracting Officer. Trenches improperly compacted shall be reopened to the depth directed, then refilled and compacted to the density specified at no additional cost to the Government.

3.4.4 Displacement of Sewers

After other required tests have been performed and the trench backfill compacted to the finished grade surface, the pipe shall be inspected to determine whether significant displacement has occurred. This inspection shall be conducted in the presence of the Contracting Officer. Pipe sizes larger than 900 mm shall be entered and examined, while smaller diameter pipe shall be inspected by shining a light or laser between manholes or manhole locations, or by the use of television cameras passed through the pipe. If, in the judgment of the Contracting Officer, the interior of the pipe shows poor alignment or any other defects that would cause improper functioning of the system, the defects shall be remedied as directed at no additional cost to the Government

END OF SECTION

SECTION 02241

BASE COURSE

PART 1 GENERAL

1.1 REFERENCES

The publications listed below form a part of this specification to the extent referenced. The publications are referred to in the text by basic designation only.

AMERICAN SOCIETY FOR TESTING AND MATERIALS (ASTM)

ASTM C 88	(1990) Soundness of Aggregates by Use of Sodium Sulfate or Magnesium Sulfate
ASTM C 127	(1988) Specific Gravity and Absorption of Course Aggregate
ASTM C 128	(1993) Specific Gravity and Absorption of Fine Aggregate
ASTM C 131	(1989) Resistance to Degradation of Small-Size Coarse Aggregate by Abrasion and Impact in the Los Angeles Machine
ASTM C 136	(1995) Sieve Analysis of Fine and Coarse Aggregates
ASTM D 75	(1987; Rev 1992) Sampling Aggregates
ASTM D 422	(1963; Rev 1992) Particle-Size Analysis of Soils
ASTM D 1556	(1990) Density and Unit Weight of Soil In-Place by the Sand-Cone Method
ASTM D 1557	(1991) Moisture-Density Relations of Soils and Soil-Aggregate Mixtures Using 10-Lb. (4.54-kg) Rammer and 18-In. (457-mm) Drop
ASTM D 2167	(1994) Density and Unit Weight of Soil In-Place by the Rubber Balloon Method
ASTM D 4318	(1995) Liquid Limit, Plastic Limit, and Plasticity Index of Soils
ASTM E 11	(1995) Wire-Cloth Sieves for Testing Purposes

1.2 DEFINITIONS

1.2.1 Stabilized Aggregate Base

Stabilized Aggregate Base as used herein is well graded, durable aggregate uniformly moistened and mechanically stabilized by compaction.

1.2.2 Degree of Compaction

Degree of compaction required is expressed as a percentage of the maximum density obtained by the test procedure presented in ASTM D 1557, Method D, abbreviated hereinafter as percent laboratory maximum density.

1.3 GENERAL

The work specified herein consists of the construction of a stabilized-aggregate base course. The work shall be performed in accordance with this specification and shall conform to the lines, grades, notes and typical sections shown in the plans.

1.4 SUBMITTALS

Government approval is required for submittals with a "GA" designation; submittals having an "FIO" designation are for information only. The following shall be submitted in accordance with Section 01300 SUBMITTAL PROCEDURES:

SD-09 Reports

Test Results; FIO.

Results of laboratory tests specified under paragraph Aggregates shall be submitted to the Contracting Officer and approved prior to using the material. Tests shall show liquid limit, plasticity index, soundness, wear, fractured faces, and sieve analysis tests including percentage of particles having diameters less than 0.02 mm. Copies of field test results shall be submitted within 24 hours after the tests are performed.

1.5 WEATHER LIMITATIONS

Base shall not be constructed when the atmospheric temperature is less than 35 degrees F. Base shall not be constructed on subgrades that are frozen or contain frost. If the temperature falls below 35 degrees F, completed areas shall be protected against any detrimental effects of freezing.

1.6 PLANT, EQUIPMENT, MACHINES, AND TOOLS

1.6.1 General Requirements

Plant, equipment, machines, and tools used in the work shall be maintained in satisfactory working condition at all times. Other compacting equipment may be used in lieu of that specified, where it can be demonstrated that the results are equivalent. The equipment shall be adequate and have the capability of producing the results specified.

1.6.2 Sprinkling Equipment

Sprinkling equipment shall consist of tank trucks, pressure distributors, or other approved equipment designed to apply controlled quantities of water uniformly over variable widths of surface.

1.6.3 Straightedge

The Contractor shall furnish and maintain at the site, in good condition, one 10 foot straightedge for use in the testing of the finished surface. Straightedge shall be made available for Government use.

1.7 STOCKPILING MATERIALS

Materials, including approved material available from excavation and grading, shall be stockpiled in the manner and at locations designated. Before stockpiling of material, storage sites shall be cleared, and sloped to drain. Materials obtained from different sources shall be stockpiled separately.

1.8 SAMPLING AND TESTING

1.8.1 General Requirements

Sampling and testing shall be performed by an approved commercial testing laboratory or by facilities furnished by the Contractor. No work requiring testing shall be permitted until the facilities have been inspected and approved. The first inspection shall be at the expense of the Government. Cost incurred for any subsequent inspection required because of failure of the facilities to pass the first inspection will be charged to the Contractor.

1.8.2 Test Results

Results shall verify that materials comply with this specification. When deficiencies are found, the initial analysis shall be repeated and the material already placed shall be retested to determine the extent of unacceptable material. All in-place unacceptable material shall be replaced or modified to meet specification requirements.

1.8.3 Sampling

Aggregate samples for laboratory tests shall be taken in accordance with ASTM D 75.

1.8.4 Sieve Analysis

Before starting work, at least one sample of material shall be tested in accordance with ASTM C 136 and ASTM D 422 on sieves conforming to ASTM E 11.

1.8.5 Liquid Limit and Plasticity Index

Liquid limit and plasticity index shall be in accordance with ASTM D 4318.

1.8.6 Laboratory Density

Tests shall provide a moisture-density relationship for the stabilized-aggregate. Tests shall be conducted in accordance with ASTM D 1557, Method D.

1.8.7 Wear Tests

Wear tests shall be performed in accordance with ASTM C 131.

1.8.8 Sampling and Testing During Construction

Quality control sampling and testing during construction shall be performed as specified in section "CONTRACTOR QUALITY CONTROL."

PART 2 PRODUCTS

2.1 MATERIALS

2.1.1 Aggregates

Aggregates shall consist of crushed stone, crushed gravel, angular sand, or other approved materials. Aggregates shall be durable and sound, free from lumps of clay, organic matter, objectionable coatings, and other foreign material. Material retained on a No. 4 sieve shall be known as coarse aggregate and that passing the No. 4 sieve shall be known as binder material.

2.1.1.1 Coarse Aggregate

Coarse aggregates, consisting of angular fragments of uniform density and quality, shall have a percentage of wear not to exceed 50 percent after 500 revolutions when tested in accordance with ASTM C 131. The coarse aggregate shall not have a loss greater than 15 percent weighted average at five cycles when tested for soundness in magnesium sulfate in accordance with ASTM C 88. The amount of flat and elongated particles shall not exceed 30 percent. A flat particle is one having a ratio of width to thickness greater than 3, and an elongated particle is one having a ratio of length to width greater than 3.

a. Crushed Gravel: Crushed gravel shall be manufactured from gravel particles 50 percent of which by weight are retained on the maximum size gradation sieve specified.

b. Crushed Stone: Crushed stone retained on each sieve specified shall contain at least 50 percent by weight of crushed pieces having two or more freshly fractured faces with the area of each face being at least equal to 75 percent of the smallest midsectional area of the piece. When two fractures are adjacent, the angle between the planes of the fractures must be at least 30 degrees to count as two fractured faces.

2.1.1.2 Binder Material

Binder material shall consist of screenings, angular sand, or other finely divided mineral matter processed or naturally combined with the coarse aggregate. Liquid-limit and plasticity-index requirements shall apply to any component that is blended to meet the required gradation and shall also apply to the completed course. The portion of any component or of the completed course passing the No. 40 sieve shall be either nonplastic or have a liquid limit not greater than 25 and a plasticity index not greater than 5.

2.1.2 Gradation

Requirements for gradation specified shall apply to the completed base course. The aggregates shall be continuously graded within the following limits:

Sieve Designation	Percentage by Weight Passing Square-mesh Sieve		
	No. 1	No. 2	No. 3
50 mm	100	---	---
38 mm	70-100	100	---
25 mm	45-80	60-100	100
12 mm	30-60	30-65	40-70
No. 4	20-50	20-50	20-50
No. 10	15-40	15-40	15-40
No. 40	5-25	5-25	5-25
No. 200	0-10	0-10	0-10

The values are based on aggregates of uniform specific gravity, and the percentages passing the various sieves are subject to appropriate correction in accordance with ASTM C 127 and ASTM C 128 when aggregates of varying specific gravities are used.

PART 3 EXECUTION

3.1 GENERAL REQUIREMENTS

When the base is constructed in more than one layer, the previously constructed layer shall be cleaned of loose and foreign matter by sweeping with power sweepers or power brooms, except that hand brooms may be used in areas where power cleaning is not practicable. Adequate drainage shall be provided during the entire period of construction to prevent water from collecting or standing on the area to be stabilized. Line and grade stakes shall be provided as necessary for control. Grade stakes shall be in lines parallel to the centerline of the area under construction and suitably spaced for string lining.

3.2 PREPARATION OF UNDERLYING COURSE

3.2.1 General Requirements

Before constructing stabilized-aggregate base course, the previously constructed underlying course shall be cleaned of foreign substances. Surface of underlying course shall meet the specified compaction and surface tolerances. Subgrade shall conform to Section 02210 GRADING (EARTHWORK). Ruts or soft, yielding spots that may appear in the underlying course, areas having inadequate compaction, and deviations of the surface from requirements specified shall be corrected. Finished underlying course shall not be disturbed by traffic or other operations and shall be maintained in a satisfactory condition until base course is placed.

3.2.2 Grade Control

Underlying material shall be excavated to sufficient depth for the required stabilized base course thickness so that the finished stabilized base course with the subsequent surface course will meet the fixed grade. Finished and completed base course shall conform to the lines, grades, cross section, and dimensions indicated.

3.3 INSTALLATION

3.3.1 Mixing and Placing

Materials shall be mixed and placed in such a manner as to obtain uniformity of the stabilized aggregate base course material and at a uniform optimum water content for compaction. The Contractor shall make such adjustments in mixing or placing procedures or in equipment to obtain the true grades, to minimize segregation and degradation, to reduce or accelerate loss or increase of water, and to insure a satisfactory base course.

3.3.2 Edges of Base Course

Approved material shall be placed along edges of stabilized aggregate base course in such quantities as will compact to thickness of the course being constructed, or to the thickness of each layer in a multiple layer course, allowing in each operation at least a 300 mm width of the shoulder to be rolled and compacted simultaneously with rolling and compacting of each layer of base course.

3.3.3 Compaction

Each layer of stabilized aggregate base course including shoulders shall be compacted. Water content shall be maintained at optimum. Density of compacted mixture shall be at least 100 percent of laboratory maximum density. Rolling shall begin at the outside edge of the surface and proceed to the center, overlapping on successive trips at least one-half the width of the roller. Alternate trips of the roller shall be slightly different lengths. Speed of the roller shall be such that displacement of the aggregate does not occur. Areas inaccessible to the rollers shall be compacted with mechanical tampers, and shall be shaped and finished by hand methods.

3.3.4 Layer Thickness

Compacted thickness of the stabilized course shall be as indicated. No layer shall be in excess of 200 mm nor less than 75 mm in compacted thickness.

3.3.5 Finishing

The surface of the top layer shall be finished to grade and cross section shown. Finished surface shall be of uniform texture. Light blading during compaction may be necessary for the finished surface to conform to the lines, grades, and cross sections. Should the surface for any reason become rough, corrugated, uneven in texture, or traffic marked prior to completion, such unsatisfactory portion shall be scarified, reworked, recompacted, or replaced as directed.

3.3.5.1 Smoothness

Surface of each layer shall show no deviations in excess of 9.4 mm when tested with the 300 mm straightedge. Deviations exceeding this amount shall be corrected by removing material and replacing with new material, or by reworking existing material and compacting, as directed.

3.3.5.2 Thickness Control

Compacted thickness of the stabilized base course shall be within 6 mm of the thickness indicated. Where the measured thickness is more than 6 mm deficient, such areas shall be corrected by scarifying, adding new material of proper gradation, reblading, and recompacting as directed.

Where the measured thickness is more than 6 mm thicker than indicated, the course shall be considered as conforming to the specified thickness requirements. Average job thickness shall be the average of all thickness measurements taken for the job, but shall be within 6 mm of the thickness indicated.

3.4 FIELD QUALITY CONTROL

3.4.1 Field Density

Field in-place density shall be determined in accordance with ASTM D 1556 or ASTM D 2167.

3.4.2 Smoothness

Measurements for deviation from grade and cross section shown shall be taken in successive positions parallel to the road centerline with a 3-meter straightedge. Measurements shall also be taken perpendicular to the road centerline at 15-meter intervals.

3.4.3 Thickness

The completed thickness of the base course shall be within 6 mm of the thickness indicated. The thickness of the base course shall be measured at intervals providing at least one measurement for at least each 405 square meters of base course. The depth measurement shall be made by test holes at least 75 mm in diameter. Where the measured thickness of the base course is more than 13 mm deficient, such areas shall be corrected by excavating to the required depth and replacing with new material. Where the measured thickness of the base course is 13 mm more than indicated, it will be considered as conforming with the requirements plus 13 mm, provided the surface of the base course is within 13 mm of established grade. The average job thickness shall be the average of the job measurements as specified above but within 6 mm of the thickness indicated.

3.5 TRAFFIC

Completed portions of the area may be opened to traffic, provided there is no marring or distorting of the surface by the traffic. Heavy equipment shall not be permitted except when necessary to construction, and then the area shall be protected against marring or damage to the completed work.

3.6 MAINTENANCE

The stabilized-aggregate base course shall be maintained in a satisfactory condition until accepted. Maintenance shall include immediate repairs to any defects and shall be repeated as often as necessary to keep the area intact.

3.7 DISPOSAL OF UNSATISFACTORY MATERIALS

Material that is removed for the required correction of defective areas and waste material and debris shall be disposed of as indicated in Section: GRADING (EARTHWORK).

END OF SECTION

SECTION 02511

CONCRETE SIDEWALKS AND CURBS AND GUTTERS

PART 1 GENERAL

1.1 REFERENCES

The publications listed below form a part of this specification to the extent referenced. The publications are referred to in the text by basic designation only.

AMERICAN SOCIETY FOR TESTING AND MATERIALS (ASTM)

ASTM C 31/C 31M	(1995) Making and Curing Concrete Test Specimens in the Field
ASTM C 143	(1978; Rev A, 1990) Slump of Hydraulic Cement Concrete
ASTM C 171	(1995) Sheet Materials for Curing Concrete
ASTM C 172	(1990) Sampling Freshly Mixed Concrete
ASTM C 173	(1978; Rev A, 1994) Air Content of Freshly Mixed Concrete by the Volumetric Method
ASTM C 231	(1982; Rev B, 1991) Air Content of Freshly Mixed Concrete by the Pressure Method
ASTM D 1751	(1983; Rev 1991) Preformed Expansion Joint Filler for Concrete Paving and Structural Construction (Nonextruding and Resilient Bituminous Types)
ASTM D 1752	(1984; Rev 1992) Preformed Sponge Rubber and Cork Expansion Joint Fillers for Concrete Paving and Structural Construction

FEDERAL SPECIFICATIONS (FS)

FS SS-S-1401	(Rev. C) Sealant, Joint, Non-Jet-Fuel-Resistant, Hot-Applied, for Portland Cement and Asphalt Concrete Pavements
FS CCC-C-467	(Rev. C) Cloth, Burlap, Jute (or Kenaf)

U.S. ARMY CORPS OF ENGINEERS HANDBOOK FOR CEMENT AND CONCRETE (CRD)

CRD-C 300	(1988) Membrane-Forming Compounds for Curing Concrete

1.2 SUBMITTALS

Government approval is required for submittals with a "GA" designation; submittals having an "FIO" designation are for information only. The

following shall be submitted in accordance with Section 01300 SUBMITTAL PROCEDURES:

SD-09 Reports

Test Reports; FIO.

Copies of all test reports for tests specified in paragraphs "CONCRETE" and "FIELD QUALITY CONTROL" shall be submitted within 24 hours of the completion of the test.

SD-13 Certificates

Certificates of Compliance; FIO.

Certificates of Compliance shall be submitted for the concrete mix design, curing compound, and joint sealant materials specified under Part 2: PRODUCTS.

SD-18 Records

Delivery Tickets; FIO.

Copies of certified delivery tickets for all concrete used in the construction shall be submitted.

1.3 WEATHER LIMITATIONS

1.3.1 Placing During Cold Weather

Concrete placement shall be discontinued when the air temperature reaches 4 degrees C and is falling. Placement may begin when the air temperature reaches 2 degrees C and is rising. Provisions shall be made to protect the concrete from freezing during the specified curing period. If it is necessary to place concrete when the temperature of the air, aggregates, or water is below 2 degrees C, placement shall be approved in writing. Approval shall be contingent upon full conformance with the following provisions. The underlying material shall be prepared and protected so that it is entirely free of frost when the concrete is deposited. Mixing water and aggregates shall be heated as necessary to result in the temperature of the in-place concrete being between 10 and 24 degrees C.

Methods and equipment for heating shall be approved. The aggregates shall be free of ice, snow, and frozen lumps before entering the mixer. Covering and other means shall be provided for maintaining the concrete at a temperature of at least 10 degrees C for not less than 72 hours after placing, and at a temperature above freezing for the remainder of the curing period.

1.3.2 Placing During Warm Weather

The temperature of the concrete as placed shall not exceed 29 degrees C, except where an approved retarder is used. The mixing water and/or aggregates shall be cooled, if necessary, to maintain a satisfactory placing temperature. In no case shall the placing temperature exceed 32 degrees C.

1.4 PLANT, EQUIPMENT, MACHINES, AND TOOLS

1.4.1 General Requirements

Plant, equipment, machines, and tools used in the work shall be subject to approval and shall be maintained in a satisfactory working condition at all times. The equipment shall have the capability of producing the required product, meeting grade controls, thickness control, and smoothness requirements as specified. Use of the equipment shall be discontinued if it produces unsatisfactory results. The Contracting Officer shall have access at all times to the plant and equipment to ensure proper operation and compliance with specifications.

1.4.2 Slip Form Equipment

Slip form paver or curb forming machine will be approved based on trial use on the job and shall be self-propelled, automatically controlled, crawler mounted, and capable of spreading, consolidating, and shaping the plastic concrete to the desired cross section in one pass.

PART 2 PRODUCTS

2.1 CONCRETE

Concrete shall conform to the applicable requirements of Section 02515 CONCRETE PAVEMENTS FOR ROADS AND AIRFIELDS, except as otherwise specified. Concrete shall have a minimum compressive strength of24 MPa at 28 days. The maximum aggregate size shall be 30 mm.

2.1.1 Air Content

Mixtures shall have air content by volume of concrete of 5 to 7 percent, based on measurements made immediately after discharge from the mixer.

2.1.2 Slump

The concrete maximum slump shall be 75 mm where determined in accordance with ASTM C 143.

2.2 CONCRETE CURING MATERIALS

2.2.1 Impervious Sheet Materials

Impervious sheet materials shall conform to ASTM C 171, type optional, except that polyethylene film, if used, shall be white opaque.

2.2.2 Burlap

Burlap shall conform to FS CCC-C-467.

2.2.3 Membrane-Forming Curing Compound

Membrane-forming curing compound shall conform to CRD C 300. Non-pigmented compound shall contain a fugitive dye.

2.3 CONCRETE PROTECTION MATERIALS

2.3.1 Concrete Protection Materials

Concrete protection materials shall be linseed oil mixture of equal parts, by volume, of linseed oil and either mineral spirits, NAPTHA, or turpetine. At the option of the Contractor, commerically prepared linseed oil mixtures, formulated specifically for application to concrete to provide protection against the action of deicing chemicals, may be used, except that emulsified mixtures are not acceptable.

2.4 JOINT FILLER STRIPS

2.4.1 Contraction Joint Filler for Curb and Gutter

Contraction joint filler for curb and gutter shall consist of hard-pressed fiberboard.

2.4.2 Expansion Joint Filler, Premolded

Expansion joint filler, premolded, shall conform to ASTM D 1751 or ASTM D 1752, 9 mm thick, unless otherwise indicated.

2.5 FORMWORK

Formwork shall be designed and constructed to insure that the finished concrete will conform accurately to the indicated dimensions, lines, and elevations, and within the tolerances specified. Forms shall be of wood or steel, straight, of sufficient strength to resist springing during depositing and consolidating concrete. Wood forms shall be surfaced plank, 50 mm nominal thickness, straight and free from warp, twist, loose knots, splits or other defects. Wood forms shall have a nominal length of 3 meters. Radius bends may be formed with 19 mm boards, laminated to the required thickness. Steel forms shall be channel-formed sections with a flat top surface and with welded braces at each end and at not less than two intermediate points. Ends of steel forms shall be interlocking and self-aligning. Steel forms shall include flexible forms for radius forming, corner forms, form spreaders, and fillers. Steel forms shall have a nominal length of 3 meters with a minimum of two welded stake pockets per form. Stake pins shall be solid steel rods with chamfered heads and pointed tips designed for use with steel forms.

2.5.1 Sidewalk Forms

Sidewalk forms shall be of a height equal to the full depth of the finished sidewalk.

2.5.2 Curb and Gutter Forms

Curb and gutter outside forms shall have a height equal to the full depth of the curb or gutter. The inside form of curb shall have batter as indicated and shall be securely fastened to and supported by the outside form. Rigid forms shall be provided for curb returns, except that benders or thin plank forms may be used for curb or curb returns with a radius of 3 meters or more, where grade changes occur in the return, or where the central angle is such that a rigid form with a central angle of 90 degrees cannot be used. Back forms for curb returns may be made of 30 mm benders, for the full height of the curb, cleated together.

PART 3 EXECUTION

3.1 SUBGRADE PREPARATION

The subgrade shall be constructed to the specified grade and cross section prior to concrete placement. Subgrade shall be placed and compacted to conform with applicable requirements of Section 02210 GRADING (EARTHWORK).

3.1.1 Sidewalk Subgrade

The subgrade shall be tested for grade and cross section with a template extending the full width of the sidewalk and supported between side forms.

3.1.2 Curb and Gutter Subgrade

The subgrade shall be tested for grade and cross section by means of a template extending the full width of the curb and gutter. The subgrade shall be of materials equal in bearing quality to the subgrade under the adjacent pavement.

3.1.3 Maintenance of Subgrade

The subgrade shall be maintained in a smooth, compacted condition in conformity with the required section and established grade until the concrete is placed. The subgrade shall be in a moist condition when concrete is placed. The subgrade shall be prepared and protected so as to produce a subgrade free from frost when the concrete is deposited.

3.2 FORM SETTING AND REINFORCEMENT PLACEMENT

Forms shall be carefully set to the indicated alinement, grade and dimensions. Forms shall be held rigidly in place by a minimum of three stakes per form placed at intervals not to exceed 1-meter. Corners, deep sections, and radius bends shall have additional stakes and braces, as required. Clamps, spreaders, and braces shall be used where required to insure rigidity in the forms. Forms shall be removed without injuring the concrete. Bars or heavy tools shall not be used against the concrete in removing the forms. Any concrete found defective after form removal shall be promptly and satisfactorily repaired. Forms shall be cleaned and coated with form oil each time before concrete is placed. Wood forms may, instead, be thoroughly wetted with water before concrete is placed, except that with probable freezing temperatures, oiling is mandatory.

3.2.1 Sidewalks

Forms for sidewalks shall be set with the upper edge true to line and grade with an allowable tolerance of 3 mm in any 3-meters long section. After forms are set, grade and alinement shall be checked with a 3-meter straightedge. Forms shall have a transverse slope of 6 mm per meter with the low side adjacent to the roadway. Side forms shall not be removed for 12 hours after finishing has been completed.

3.2.2 Curbs and Gutters

The forms of the front of the curb shall be removed not less than 2 hours nor more than 6 hours after the concrete has been placed. Forms back of curb shall remain in place until the face and top of the curb have been

finished as specified for concrete finishing. Gutter forms shall not be removed while the concrete is sufficiently plastic to slump in any direction.

3.3 SIDEWALK CONCRETE PLACEMENT AND FINISHING

3.3.1 Formed Sidewalks

Concrete shall be placed in the forms in one layer of such thickness that when consolidated and finished the sidewalks will be of the thickness indicated. After concrete has been placed in the forms, a strike-off guided by side forms shall be used to bring the surface to proper section to be compacted. The concrete shall be consolidated with a vibrator, and the surface shall be finished to grade with a wood float or bull float, edged, and broom finished.

3.3.2 Concrete Finishing

After straightedging, when most of the water sheen has disappeared, and just before the concrete hardens, the surface shall be finished to a smooth and uniformly fine granular or sandy texture free of waves, irregularities, or tool marks. A scored surface shall be produced by brooming with a fiber-bristle brush in a direction transverse to that of the traffic.

3.3.3 Edge and Joint Finishing

All slab edges, including those at formed joints, shall be finished carefully with an edger having a radius of 3 mm. Transverse joint shall be edged before brooming, and the brooming shall eliminate the flat surface left by the surface face of the edger. Corners and edges which have crumbled and areas which lack sufficient mortar for proper finishing shall be cleaned and filled solidly with a properly proportioned mortar mixture and then finished.

3.3.4 Surface and Thickness Tolerances

Finished surfaces shall not vary more than 8 mm from the testing edge of a 10-foot straightedge. Permissible deficiency in section thickness will be up to 6 mm.

3.4 CURB AND GUTTER CONCRETE PLACEMENT AND FINISHING

3.4.1 Formed Curb and Gutter

Concrete shall be placed to the section required in a single lift. Consolidation shall be achieved by using approved mechanical vibrators.

3.4.2 Concrete Finishing

Exposed surfaces shall be floated and finished with a smooth wood float until true to grade and section and uniform in texture. Floated surfaces shall then be brushed with a fine-hair brush with longitudinal strokes. The edges of the gutter and top of the curb shall be rounded with an edging tool to a radius of 13 mm. Immediately after removing the front curb form, the face of the curb shall be rubbed with a wood or concrete rubbing block and water until blemishes, form marks, and tool marks have been removed. The front curb surface, while still wet, shall be brushed in the same manner as

the gutter and curb top. The top surface of gutter and entrance shall be finished to grade with a wood float.

3.4.3 Joint Finishing

Curb edges at formed joints shall be finished as indicated.

3.4.4 Surface and Thickness Tolerances

Finished surfaces shall not vary more than 6 mm from the testing edge of a 3-meter straightedge. Permissible deficiency in section thickness will be up to 6 mm.

3.5 SIDEWALK JOINTS

Sidewalk joints shall be constructed to divide the surface into rectangular areas. Transverse contraction joints shall be spaced at a distance equal to the sidewalk width or 2 meters on centers, whichever is less, and shall be continuous across the slab. Longitudinal contraction joints shall be constructed along the centerline of all sidewalks 3 meters or more in width. Transverse expansion joints shall be installed at sidewalk returns and opposite expansion joints in adjoining curbs. Where the sidewalk is not in contact with the curb, transverse expansion joints shall be installed as indicated. Expansion joints shall be formed about structures and features which project through or into the sidewalk pavement, using joint filler of the type, thickness, and width indicated.

3.5.1 Contraction Joints

The contraction joints shall be formed in the fresh concrete by cutting a groove in the top portion of the slab to a depth of at least one-fourth of the sidewalk slab thickness, using a jointer to cut the groove, or by sawing a groove in the hardened concrete with a power-driven saw.

3.5.2 Expansion Joints

Expansion joints shall be formed with 9 mm joint filler strips and spaced a minimum of 15-meter intervals. Joint filler shall be placed with top edge 6 mm below the surface and shall be held in place with steel pins or other devices to prevent warping of the filler during floating and finishing. Immediately after finishing operations are completed, joint edges shall be rounded with an edging tool having a radius of 3 mm, and concrete over the joint filler shall be removed. At the end of the curing period, expansion joints shall be carefully cleaned and filled with joint sealer. Concrete at the joint shall be surface dry and the atmospheric and pavement temperatures shall be above 10 degrees C at the time of application of joint-sealing materials. Joints shall be filled with sealer flush with the concrete surface in such manner as to minimize spilling on the walk surface. Spilled sealing material shall be removed immediately and the surface of the walk cleaned. Joints shall be sealed as specified in Section 02580 JOINT SEALING IN CONCRETE PAVEMENTS FOR ROADS AND AIRFIELDS.

3.6 CURB AND GUTTER JOINTS

Curb and gutter joints shall be constructed at right angles to the line of curb and gutter.

3.6.1 Contraction Joints

Contraction joints shall be constructed directly opposite contraction joints in abutting portland cement concrete pavements and spaced so that monolithic sections between curb returns will not be less than 2 meters nor greater than 5 meters in length. Contraction joints shall be constructed by means of 3 mm thick separators and of a section conforming to the cross section of the curb and gutter. Separators shall be removed as soon as practicable after concrete has set sufficiently to preserve the width and shape of the joint and prior to finishing.

3.6.2 Expansion Joints

Expansion joints shall be formed by means of preformed expansion joint filler material cut and shaped to the cross section of curb and gutter. Expansion joints shall be provided in curb and gutter directly opposite expansion joints of abutting portland cement concrete pavement, and shall be of the same type and thickness as joints in the pavement. Where curb and gutter do not abut portland cement concrete pavement, expansion joints at least 9 mm in width shall be provided at intervals not exceeding 15 meters. Expansion joints shall be provided in nonreinforced concrete gutter at locations indicated. Expansion joints shall be sealed immediately following curing of the concrete or as soon thereafter as weather conditions permit. Joints shall be sealed as specified in Section 02580 JOINT SEALING IN CONCRETE PAVEMENTS FOR ROADS AND AIRFIELDS.

3.7 CURING AND PROTECTION

3.7.1 General Requirements

Concrete shall be protected against loss of moisture and rapid temperature changes for at least 7 days from the beginning of the curing operation. Unhardened concrete shall be protected from rain and flowing water. All equipment needed for adequate curing and protection of the concrete shall be on hand and ready for use before actual concrete placement begins. Protection shall be provided as necessary to prevent cracking of the pavement due to temperature changes during the curing period.

3.7.1.1 Mat Method

The entire exposed surface shall be covered with two or more layers of burlap. Mats shall overlap each other at least 150 mm. The mat shall be thoroughly wetted with water prior to placing on concrete surface and shall be kept continuously in a saturated condition and in intimate contact with concrete for not less than 7 days.

3.7.1.2 Impervious Sheeting Method

The entire exposed surface shall be wetted with a fine spray of water and then covered with impervious sheeting material. Sheets shall be laid directly on the concrete surface with the light-colored side up and overlapped 300 mm when a continuous sheet is not used. The curing medium shall not be less than 450 mm wider than the concrete surface to be cured, and shall be securely weighted down by heavy wood planks, or a bank of moist earth placed along edges and laps in the sheets. Sheets shall be satisfactorily repaired or replaced if torn or otherwise damaged during

curing. The curing medium shall remain on the concrete surface to be cured for not less than 7 days.

3.7.1.3 Membrane Curing Method

A uniform coating of membrane-curing compound shall be applied to the entire exposed surface of the concrete as soon after finishing as the free water has disappeared from the finished surface. Formed surfaces shall be coated immediately after the forms are removed and in no case longer than 1 hour after the removal of forms. Concrete shall not be allowed to dry before the application of the membrane. If any drying has occurred, the surface of the concrete shall be moistened with a fine spray of water and the curing compound applied as soon as the free water disappears. Curing compound shall be applied in two coats by hand-operated pressure sprayers at a coverage of approximately 5 square meters per liter for both coats. The second coat shall be applied in a direction approximately at right angles to the direction of application of the first coat. The compound shall form a uniform, continuous, coherent film that will not check, crack, or peel and shall be free from pinholes or other imperfections. If pinholes, abrasions, or other discontinuities exist, an additional coat shall be applied to the affected areas within 30 minutes. Concrete surfaces that are subjected to heavy rainfall within 3 hours after the curing compound has been applied shall be resprayed by the method and at the coverage specified above. Areas where the curing compound is damaged by subsequent construction operations within the curing period shall be resprayed. Necessary precautions shall be taken to insure that the concrete is properly cured at sawed joints. Concrete surfaces to which membrane-curing compounds have been applied shall be adequately protected during the entire curing period from pedestrian and vehicular traffic, except as required for joint-sawing operations and surface tests, and from any other possible damage to the membrane.

3.7.2 Backfilling

After curing, debris shall be removed and the area adjoining the concrete shall be backfilled, graded, and compacted to conform to the surrounding area in accordance with lines and grades indicated.

3.7.3 Protection

Completed concrete shall be protected from damage until accepted. The Contractor shall repair damaged concrete and clean concrete discolored during construction. Concrete that is damaged shall be removed and reconstructed for the entire length between regularly scheduled joints. Refinishing the damaged portion will not be acceptable. Removed damaged portions shall be disposed of as directed.

3.8 FIELD QUALITY CONTROL

3.8.1 General Requirements

The Contractor shall perform the inspection and tests described and meet the specified requirements for inspection details and frequency of testing as specified in Section CONTRACTOR QUALITY CONTROL. Based upon the results of these inspections and tests, the Contractor shall take the action and submit reports as required below, and any additional tests to insure that the requirements of these specifications are met.

3.8.2 Concrete Testing

3.8.2.1 Strength Testing

The Contractor shall provide molded concrete specimens for strength tests. The samples for strength tests shall be taken in accordance with ASTM C 172. Cylinders for acceptance shall be molded in conformance with ASTM C 31 by an approved testing laboratory. Concrete specified on the basis of compressive strength will be considered satisfactory if the averages of all sets of three consecutive strength test results equal or exceed the specified strength, and no individual strength test result falls below the specified strength by more than 3.43 MPa

3.8.2.2 Air Content

Air content shall be determined in accordance with ASTM C 173 or ASTM C 231. ASTM C 231 shall be used with concretes and mortars made with relatively dense natural aggregates. If results are out of tolerance, the placing foreman shall be notified and he shall take appropriate action to have the air content corrected at the plant. Additional tests for air content will be performed on each truckload of material until such time as the air content is within the tolerance specified.

3.8.2.3 Slump Test

Slump tests shall be made in accordance with ASTM C 143. Additional tests will be performed when excessive variation in the workability of the concrete is noted or when excessive crumbling or slumping is noticed along the edges of slip-formed concrete.

3.8.3 Thickness Evaluation

The anticipated thickness of the concrete shall be determined prior to placement by passing a template through the formed section or by measuring the depth of opening of the extrusion template of the curb forming machine. If a slip form paver is used for sidewalk placement, the subgrade shall be true to grade prior to concrete placement and the thickness will be determined by measuring each edge of the completed slab.

3.8.4 Surface Evaluation

The finished surface of each category of the completed work shall be uniform in color and free of blemishes and form or tool marks and meet surface smoothness requirements.

3.9 SURFACE DEFICIENCIES AND CORRECTIONS

3.9.1 Thickness Deficiency

When measurements indicate that the completed concrete section is deficient in thickness by more than 6 mm the deficient section will be removed, between regularly scheduled joints, and replaced.

3.9.2 Appearance

Exposed surfaces of the finished work will be inspected by the Government and any deficiencies in appearance will be identified. Areas which exhibit

high or low areas, cracking, discoloration, form marks, tool marks or which are otherwise inconsistent with the overall appearances or show poor workmanship shall be removed and replaced.

END OF SECTION

SECTION 02515

CONCRETE PAVEMENT FOR ROADS AND AIRFIELDS

PART 1 GENERAL

1.1 APPLICABLE PUBLICATIONS

The publications listed below form a part of this specification to the extent referenced. The publications are referred to in the text by basic designation only.

DEPARTMENT OF THE ARMY, CORPS OF ENGINEERS HANDBOOK FOR CONCRETE AND CEMENT

CRD-C 55	(1983) Concrete Mixer Performance
CRD-C 95	(1978) Concrete Plant Standards
CRD-C 104	(1980) Calculation of the Fineness Modulus of Aggregate
CRD-C 112	(1969) Surface Moisture in Aggregate by Water Displacement
CRD-C 114	(1973) Soundness of Aggregate by Freezing and Thawing of Concrete Specimens
CRD-C 119	(1953; Rev Jun 1963) Flat and Elongated Particles in Coarse Aggregate
CRD C 130	(1976) Scratch Hardness of Coarse Aggregate Particles
CRD-C l43	(1962) Meters for Automatic Indication of Moisture in Fine Aggregate
CRD-C 300	(1977) Membrane-Forming Compounds for Curing Concrete
CRD-C 400	(1963) Water for Use in Mixing or Curing Concrete
CRD-C 540	(1971, Rev 1981) Nonbituminous Inserts For Contraction Joints in Portland Cement Concrete Airfield Pavements, Sawable Type

U.S. DEPARTMENT OF COMMERCE, NATIONAL BUREAU OF STANDARDS (NBS) HANDBOOK

NBS-44	(1986) Specifications, Tolerances and Other Technical Requirements for Weighing and Devices

AMERICAN SOCIETY FOR TESTING AND MATERIALS (ASTM) PUBLICATIONS

ASTM A 185	(1994) Standard Specification for Steel Welded Wire Fabric, Plain for Concrete Reinforcement
ASTM A 615/A 615M	(Rev 1995) Deformed and Plain Billet-Steel Bars for Concrete Reinforcement
ASTM C 31/C 31M	(1995) Standard Practice For Making and Curing Concrete Test Specimens in the Field
ASTM C 33	(1993) Concrete Aggregates
ASTM C 70	(1994) Surface Moisture in Fine Aggregate
ASTM C 78	(1994) Flexural Strength of Concrete (Using Simple Beam with Third-Point Loading)
ASTM C 94	(1995) Ready-Mixed Concrete
ASTM C 117	(1995) Materials Finer than 75 Micrometers (No. 200) Sieve in Mineral Aggregates by Washing
ASTM C 123	(1994) Lightweight Pieces in Aggregate
ASTM C 136	(Rev A, 1995) Sieve Analysis of Fine and Coarse Aggregates
ASTM C 142	(1978; Rev 1990) Clay Lumps and Friable Particles in Aggregates
ASTM C 143	(1978; Rev A, 1990) Slump of Hydraulic Cement Concrete
ASTM C 150	(1995) Portland Cement
ASTM C 171	(1995) Sheet Materials for Curing Concrete
ASTM C 231	(1982; Rev B 1991) Air Content of Freshly Mixed Concrete by the Pressure Method
ASTM C 260	(1995) Air-Entraining Admixtures for Concrete
ASTM C 295	(1990) Petrographic Examination of Aggregates for Concrete
ASTM C 494	(1992) Chemical Admixtures for Concrete
ASTM C 566	(1996) Total Moisture Content of Aggregate by Drying
ASTM C 595M	(Rev A, 1995) Blended Hydraulic Cements
ASTM C 618	(1996) Coal Fly Ash and Raw of Calcined Natural Pozzolan for Use as a Mineral Admixture in Portland Cement Concrete

ASTM C 881	(1990) Epoxy-Resin-Base Bonding Systems for Concrete
ASTM D l75l	(1983; Rev 1991) Preformed Expansion Joint Filler for Concrete Paving and Structural Construction (Nonextruding and Resilient Bituminous Types)
ASTM D l752	(1984; Rev 1992) Preformed Sponge Rubber and Cork Expansion Joint Fillers for Concrete Paving and Structural Construction

1.2 MATERIAL ACCEPTANCE TESTING

1.2.1 Preconstruction Sampling and Testing

The material represented by any sample of material from a proposed source which fails to meet specification requirements shall be replaced, and the cost of testing the replaced sample will be deducted from payments due the Contractor. The Contractor will be entitled to no additional compensation or extension of time due to any requirements for sampling and testing.

1.2.1.1 Preconstruction Sampling and Testing of Aggregate

Tests for evaluation of aggregates and proportioning of concrete mixtures shall be made by an approved commercial testing laboratory at no expense to the Government. The Government will be responsible for all airfield pavement sampling and testing regardless of the size of the project. Test methods used for determining suitability of aggregate shall be as specified herein. Tests shall include but are not limited to the following:

Approximate No. of Test	Workdays Required
* Elem. Tests - Coarse Aggregate (Sieve Analysis, Specific Gravity,	
* Absorption Sulfate	
* Soundness and Abrasion Resistance)	20
* Elem. Tests - Fine Aggregate (Sieve Analysis, Specific Gravity, Absorption Sulfate	
Soundness and Organic Impurities)	30
Unsound or Lightweight Particles	10
Particle Shape	5
Aggregates for Airfield Pavements (Deleterious Substances, Lightweight Particles)	60
Petrographic Analysis - Fine Aggregate	60
Petrographic Analysis - Coarse Aggregate	60

* Tests commonly performed on concrete aggregate.

1.2.2 Acceptance Sampling and Testing During Construction

1.2.2.1 Aggregates

During construction, aggregates shall be sampled and tested by the Contractor before delivery to the mixer to determine compliance with specification provisions. The Contracting Officer will also sample and test for acceptance.

1.2.2.2 Cement

Cement will be accepted based on mill certification and test results.

1.2.2.2.1 Prequalified Cement Sources

Cement shall be delivered and used directly from a mill of a producer designated as a qualified source if accompanied by a mill certification and test results. Samples of cement for check testing will be taken at the project site or the concrete producing plant by a representative of the Contracting Officer for testing at no expense to the Government. A list of prequalified cement sources is available from the Commander and Director, U. S. Army Engineer Waterways Experiment Station (ATTN: WESSC), P. O. Box 631, Vicksburg, Mississippi 39180.

1.2.2.3 Pozzolan

Pozzolan will be accepted based on mill certification and test results.

1.2.2.3.1 Prequalified Pozzolan Sources

Pozzolan can be delivered and used directly from a producer designated as a qualified source if accompanied by a certification. Samples of pozzolan for check testing will be taken at the project site or the concrete producing plant by a representative of the Contracting Officer for testing at no expense to the Government. A list of prequalified cement sources is available from the Commander and Director, U.S. Army Engineer Waterways Experiment Station (ATTN: WESSC), P.O. Box 631, Vicksburg, Mississippi 39180.

1.2.2.4 Admixtures

The Contractor shall provide a representative sample for testing. Testing of an admixture will be at no expense to the Government. Tests will be conducted with materials proposed for the project. An air entraining admixture that has been in storage at the project site for longer than 6 months or that has been subjected to freezing or rejected if test results were not satisfactory, will be retested at the expense of the Contractor. Certified copies of the test results shall be submitted to the Contracting Officer.

1.2.2.5 Curing Compound

The Contractor shall provide and ship a representative sample of curing compound identified by manufacture and lot number and contract number along with certificate and test results a minimum of 60 days before the material is used. The acceptance testing will be at no expense to the Government.

1.2.2.6 Epoxy Resin Material

At least 30 days before the material is used, the Contractor shall submit certified copies of test results showing that the specific lots or batches from which the material will be furnished to this project have been tested by the manufacturer and that the material conforms to the requirements of these specifications. When epoxy resin arrives at the job site, the Government will retain a sample in storage for possible future testing, as considered appropriate.

1.2.3 Construction Testing by Government

The Government may sample and test aggregates and concrete to determine compliance with the specifications. The Contractor shall provide facilities and labor as may be necessary for procurement of representative test samples.

1.3 EVALUATION AND ACCEPTANCE:

1.3.1 Road and Street Requirements

Road and street pavements shall be smooth and true to grade and cross section. When tested with a 3.05 m (10 foot) straightedge on lines 1.5 m apart parallel with the centerline of the pavement, the surface shall not vary more than 4 mm from the testing edge of the straightedge.

1.3.2 Requirements for Other Vehicular Pavements

Parking-area, motor-pool and motor-storage-area, repair-yard and open-storage-area pavements shall be smooth and true to grade and cross section. When tested with a 3.05 m (10 foot) straightedge on lines 1.5 m apart parallel with, and at right angles to, the centerline of the paved area, the surface shall vary not more than 7.5 mm from the testing edge of the straightedge.

1.3.3 Surface Tests and Corrections

As soon as the concrete has hardened enough to permit walking thereon, but not later than 24 hours after the concrete has been placed, the surface of the pavement shall be tested with an approved straightedge or other approved device that will reveal all surface irregularities varying from the testing edge exceeding tolerances specified above for road, street, and open-storage concrete pavements. The testing shall be performed by the Contractor at no expense to the Government. High spots indicated by the testing edge in excess of applicabletolerances shall be marked plainly and removed or reduced by rubbing with a carborundum brick and water. Rubbing shall be discontinued as soon as contact with the coarse aggregate is made. If high spots cannot be removed in the above manner because of disturbing the coarse aggretate, the high portion of the pavement shall be corrected by an approved surface grinding machine after the concrete is 14 days old, or the pavement shall be removed and replaced. No area of pavement that was removed and replaced and no adjacent slab or portion of a slab that remains in the pavement abutting the replacement slab shall have a length or width less than 3 meters. Testing for acceptance or rejection of the finished pavement surface.

1.4 APPROVAL OF PLANT, EQUIPMENT, AND CONSTRUCTION METHODS

1.4.1 Plant and Equipment

1.4.1.1 Batch Plant

Details and data on the concrete plant shall be submitted for review by the Contracting Officer.

1.4.1.2 Mixers

The make, type, capacity, and number of the concrete mixers proposed for use shall be submitted for review by the Contracting Officer.

1.4.2 Construction Methods

1.4.2.1 Placing Equipment

A description of the equipment proposed for placing concrete and the method of placing shall be submitted for review.

1.4.2.2 Finishing Equipment

A description of the equipment proposed for surface texturing and the method of surface texturing shall be submitted for review.

1.4.2.3 Curing

The curing media and methods to be used shall be submitted in writing for approval. The Contractor shall notify the Contracting Officer of the source from which the curing compound is to be obtained at least 60 days in advance of the time concrete placing is expected to begin. A manufacturer's certificate shall be furnished certifying that the impervious sheet curing materials, if used, comply with the requirements of ASTM C 171.

1.4.2.4 Cold Weather Requirements

When concrete is to be placed under or exposed to cold weather conditions, a description of the materials and methods proposed for protection of the concrete shall be furnished to the Contracting Officer for review.

1.4.2.5 Hot Weather Requirements

When concrete is to be placed under or exposed to hot weather conditions, a description of the methods proposed for cooling aggregate and water and the methods used to prevent evaporation in excess of 1 kg per square meter per hour from the placed concrete shall be submitted to the Contracting Officer for review.

1.5 MATERIAL DELIVERY, STORAGE, AND HANDLING

1.5.1 Cementitious Materials

1.5.1.1 Transportation

When bulk cement or pozzolan is not unloaded from primary carriers directly into weathertight hoppers at the batching plant, transportation from the

railhead, mill, or intermediate storage to the batching plant shall be accomplished in adequately designed weathertight trucks, conveyors, or other means that will protect the cement and pozzolan completely from exposure to moisture.

1.5.1.2 Storage

Immediately upon receipt at the site of the work, cementitious materials shall be stored in a dry, weathertight, and properly ventilated structure. All storage facilities shall be subject to approval and shall be such as to permit easy access for inspection and identification. Sufficient cementitious material shall be in storage to sustain continuous operation of the concrete mixing plant while pavement is being placed. To prevent cement from becoming unduly aged after delivery, the Contractor shall use any cement that has been stored at the site for 60 days or more before using cement of lesser age.

1.5.1.3 Separation of Materials

Separate facilities shall be provided for unloading, transporting, storage, and handling each type of cementitious material.

1.5.2 Aggregates

1.5.2.1 Storage

Aggregate shall be stored at the site of the batching plant in a manner to avoid breakage, segregation, or contamination by foreign materials. Each size of aggregate from each source shall be stored separately in free draining stockpiles. Fine aggregate and the smaller size of coarse aggregate shall remain in free draining storage for at least 48 hours immediately prior to use. Sufficient aggregate shall be maintained at the site at all times to permit continuous uninterrupted operation of the mixing plant while concrete is being placed.

1.5.2.2 Handling

Aggregate shall be handled in a manner to prevent segregation. Vehicles used for stockpiling or moving aggregate shall be kept clean of foreign materials. Stockpiles shall be worked in a manner to prevent different sizes of aggregate from being mixed during storage or loading of batching hoppers.

PART 2 PRODUCTS

2.1 MATERIALS

2.1.1 Cement

2.1.1.1 General

Cement and pozzolan may be furnished in bulk or packages. When cement is furnished in packages, mixing batch proportions sha11 be adjusted to require complete packages of cement.

2.1.1.2 Portland Cement

Portland cement shall conform to ASTM C 150, Type I or II, low alkali, including the false set requirement.

2.1.1.3 Portland Pozzolan Cement

Portland pozzolan cement shall conform to the requirements of ASTM C 595, Type IP or Type I (PM), including limit on Mortar Expansion, "Table 2, Physical Requirements."

2.1.1.4 Pozzolan

Pozzolan shall conform to ASTM C 618, Class F including limit on available alkalies, "Table 2 Supplementary Optional Chemical Requirements," and limit on reactivity with cement alkalies, "Table 4 Supplementary Optional Physical Requirements."

2.1.1.5 Temperature

The temperature of the cement (and pozzolan) as delivered to storage at the site, shall not exceed 65 degrees C.

2.1.2 Admixtures

2.1.2.1 Air Entraining Admixtures

The air entraining admixture shall conform to ASTM C 260 and shall consistently entrain the air content in the specified ranges under field conditions. The air entraining admixture shall be in a solution of suitable viscosity for field use.

2.1.2.2 Retarder

A retarding admixture shall meet the requirements of ASTM C 494, Type B, except that the 6 month and 1 year compressive strength tests are waived. The use of the admixture is at the option of the Contractor.

2.1.3 Curing Materials

2.1.3.1 Impervious Sheet Materials

Impervious sheet materials shall conform to ASTM C 171, type optiona1, except polyethylene film, if used, shall be white opaque.

2.1.3.2 Membrane Forming Curing Compound

Membrane forming curing compounds shall be white pigmented compounds conforming to CRD-C 300.

2.1.4 Dowels

Dowels shall be fabricated or cut to length at the shop or mill before delivery to the site. Dowels shall be free of loose flaky rust and loose scale and shall be clean and straight. Dowels shall not be sheared. Dowels shall be plain steel bars conforming to ASTM A 615, 300 MPa or 400 MPa (Grade 40 or 60), as indicated.

2.1.5 Joint Filler

2.1.5.1 For Expansion Joints

Filler shall be preformed materials conforming to ASTM D 1751 or ASTM D 1752.

2.1.5.2 For Contraction Joints

Sawable type contraction joint inserts shall conform to CRD C 540

2.1.6 Reinforcement

All reinforcement shall be free from loose flaky rust, loose scale, oil, grease, mud, or other coatings that might reduce the bond with concrete. Removal of thin powdery rust and tight rust is not required. However, reinforcing steel which is rusted to the extent that it does not conform to the required dimensions or mechanical properties shall not be used.

2.1.6.1 Wire Fabric

Welded steel wire fabric shall conform to ASTM A 185.

2.1.7 Epoxy Resin Paste

Epoxy resin paste materials shall be two component 100 percent solids, nonshrink, moisture insensitive adhesive conforming to the requirements of ASTM C 881, class as appropriate for each application temperature to be encountered, except that in addition, the materials shall meet the following requirements:

2.1.7.1 Material Type

The materials for bonding freshly mixed portland cement concrete or mortar or freshly mixed epoxy resin concrete or mortar to hardened concrete shall be Type V materials, grade as approved.

2.1.7.2 Resin Binder

The materials for use as a resin binder for complete filling of spalls, and other voids shall be Type III; for use for embedding dowels and anchor bolts Type IV, Grade 3; and for use as an injection resin Type IV, Grade 1.

2.1.8 Water

Water for washing aggregates and for mixing and curing concrete shall be fresh and free from injurious amounts of oil, acid, salt, alkali, organic matter, or other deleterious substances and shall comply with CRD-C 400.

2.1.9 Coarse Aggregate

2.1.9.1 Composition

Coarse aggregate shall consist of crushed gravel, crushed stone, a combination thereof, or crushed blast furnace slag. Crushed gravel shall contain not less than 60 percent of crushed particles by weight.

2.1.9.2 Quality

Coarse aggregate shall have a service record of at least 5 years successful service in three paving projects, or if a new source is used, shall meet the requirements for resistance to freezing and thawing, specified herein. Aggregates as delivered to the mixers shall consist of clean, hard, uncoated particles meeting the requirements of ASTM C 33. Dust and other coating shall be removed from the coarse aggregates by washing.

2.1.9.3 Particle Shape

Particles of the coarse aggregate shall be generally spherical or cubical in shape. The quantity of flat and elongated particles in any size group shall not exceed 20 percent by weight as determined by CRD-C 119. A flat particle is defined as one having a ratio of width to thickness greater than 3; an elongated particle is one having a ratio of length to width greater than 3.

2.1.9.4 Size and Grading

The nominal maximum size of the coarse aggregate shall be 37.5 50 mm. When the nominal maximum size is greater than 25 mm, the aggregates shall be furnished in two size groups as follows:

Maximum Nominal Size Millimeters	Size Group
37.5	4.75 to 19.0 mm
	19.0 mm to 37.5 mm

The grading of the coarse aggregate within the separated size groups, when tested in accordance with ASTM C 136, shall conform to the requirements of ASTM C33, sizes 67 and 4 as delivered to the mixer.

2.1.9.5 Deleterious Substances

The amount of deleterious substances in each size group of coarse aggregate shall not exceed the limits shown below, determined in accordance with ASTM C 117, ASTM C 123, ASTM C 295, CRD C 130, applicable only to material coarser than 10 mm, and ASTM C 142.

LIMITS OF MATERIALS FOR AIRFIELD PAVEMENTS
(Percentage by Weight)

Materials	Areas with Minor Popouts Moderate Weather
Clay lumps	2.0
Shale(1)	1.0
Material finer than 75 (m sieve(2)	1.0
Lightweight particles(3)	0.5
Clay ironstone(4)	1.0
Chert and cherty stone (less than 2.40 specific gravity SSD)(5)	5.0
Claystone, mudstone, and siltstone(6)	1.0

Shaly and argillaceous limestone(7)	1.0
Other soft particles	2.0
Total of all deleterious substances exclusive of material finer than the 75 (m sieve	5.0

1. Shale is defined as a fine grained thinly laminated or fissile sedimentary rock. It is commonly composed of clay or silt or both. It has been indurated by compaction or by cementation, but not so much as to have become slate.

2. Limit for material finer than 75 (m sieve will be increased to 1.5 percent for crushed aggregates if the fine material consists of crusher dust that is essentially free from clay or shale.

3. The separation medium shall have a specific gravity of 2.0. This limit does not apply to coarse aggregate manufactured from blast furnace slag unless contamination is evident.

4. Clay ironstone is defined as an impure variety of iron carbonate, iron oxide, hydrous iron oxide, or combinations thereof, commonly mixed with clay, silt, or sand. It commonly occurs as dull, earthy particles, homogeneous concretionary masses, or hard shell particles with soft interiors. Other names commonly used for clay ironstone are "chocolate bars" and limonite concretions.

5. Chert is defined as a rock composed of quartz, chalcedony or opal, or any mixture of these forms of silica. It is variable in color. The texture is so fine that the individual mineral grains are too small to be distinguished by the unaided eye. Its hardness is such that it scratches glass but is not scratched by a knife blade. It may contain impurities such as clay, carbonates, iron oxides, and other minerals. Other names commonly applied to varieties of chert are: flint, jasper, agate, onyx, hornstone, porcellanite, novaculite, sard, carnelian, plasma, bloodstone, touchstone, chrysoprase, heliotrope, and petrified wood. Cherty stone is defined as any type of rock (generally limestone) that contains chert as lenses and nodules, or irregular masses partially or completely replacing the original stone.

6. Claystone mudstone, or siltstone is defined as a massive fine grained sedimentary rock that consists predominantly of clay or silt without laminations or fissility. It may be indurated either by compaction or by cementation.

7. Shaly limestone is defined as a limestone in which shale occurs as one or more thin beds or laminae. These laminae may be regular or very irregular and may be spaced from a few centimeters down to fractions of a millimeter. Argillaceous limestone is defined as a limestone in which clay minerals occur disseminated in the stone in the amount of 10 to 50 percent by weight of the rock; when these make up from 50 to 90 percent, the rock is known as calcareous (or dolomitic) shale (or claystone, mudstone, or siltstone).

LIMITS OF MATERIALS FOR ROAD PAVEMENTS

(* Percentage by Weight)

Clay lumps and friable particles	2.0
Material finer than 75 (m sieve	1.0
Lightweight particles	1.0
Other soft particles	2.0

* The total of all deleterious substances shall not exceed 5.0 percent of the weight of the aggregate. The percentage of material finer than the 75 (m sieve shall not be included in this total. The limit for material finer than 75 (m sieve will be increased to 1.5 percent for crushed aggregates consisting of crusher dust that is essentially free from clay or shale. The separation medium shall have a specific gravity of 2.0. This limit does not apply to coarse aggregate manufactured from blast furnace slag unless contamination is evident.

2.1.9.6 Soundness

When subjected to 5 cycles of soundness test in accordance with ASTM Standard C 88, the loss of weight of coarse aggregate shall not exceed 18 percent when magnesium sulfate is used.

2.1.9.7 Resistance to Freezing and Thawing

Coarse aggregate not having a demonstrable service record shall have a durability factor of 50 or more when subjected to freezing and thawing in concrete in accordance with Corps of Engineers Specification CRD-C 114.

2.1.10 Fine Aggregate

2.1.10.1 Composition

Fine aggregate shall consist of natural sand, manufactured sand, or a combination of the two, and shall be composed of clean, hard, durable particles.

2.1.10.2 Particle Shape

Particles of the fine aggregate shall be generally spherical or cubical in shape.

2.1.10.3 Grading

Grading of the fine aggregate, as delivered to the mixer, shall conform to ASTM C 33 when tested in accordance with ASTM C 136.

In addition, the fine aggregate, as delivered to the mixer, shall have a fineness modulus of not less than 2.40 nor more than 2.90. The grading of the fine aggregate also shall be controlled so that the fineness module of at least nine of ten samples of the fine aggregate, as delivered to the mixer, will not vary more than 0.15 from the average fineness module of all samples previously taken. The fineness modulus shall be determined by CRD-C 104.

2.1.10.4 Deleterious Substances

The amount of deleterious substances in the fine aggregate shall not exceed the following limits:

Material	Percentage by Weight
Clay lumps and friable particles	1.0
Material finer than 75 (m sieve	3.0
Lightweight particles	0.5

The total of all deleterious materials shall not exceed 3.0 percent of the weight of the aggregate.

2.1.10.5 Organic Impurities

Fine aggregate shall be free from injurious amounts of organic impurities. Aggregates that produce a color darker than the standard when tested in accordance with ASTM Standard C 40 will be rejected except as provided hereinafter. Fine aggregate failing in the test may be used provided that the discoloration is due principally to the presence of coal, lignite, or similar discrete particles, and provided that the percentage of these materials is within the specified limits for deleterious materials. Fine aggregate failing in the test may be used provided that, when tested for mortar making properties, in accordance with ASTM Standard C 87, the mortar develops a compressive strength at 7 days and 28 days of not less than 95 percent of the compressive strength developed by a similar mortar made from another portion of the same fine aggregate that has been washed in a 3 percent solution of sodium hydroxide followed by thorough rinsing in water. The treatment with sodium hydroxide shall reduce the organic matter content of the fine aggregate to such an extent that the washed sand, when tested for organic matter content, will show a color lighter than standard.

2.1.10.6 Soundness

When subjected to 5 cycles of the soundness test in accordance with ASTM Standard C 88, the loss in weight of fine aggregate shall not exceed 15 percent when magnesium sulfate is used.

2.1.10.7 Resistance to Freezing and Thawing

Fine aggregate not having a demonstrable service record shall have a durability factor of 50 or more when subjected to freezing and thawing in concrete in accordance with Corps of Engineers Standard CRD-C 114.

2.2 MIXTURE PROPORTIONING

2.2.1 Composition

Concrete shall be composed of cementitious material, water, fine and coarse aggregates, and admixtures. The cementitious materials shall be portland cement or portland pozzolan cement. The admixture shall be an air entraining admixture (or may be an air entraining admixture plus either a retarding admixture, or a water reducing admixture as approved or directed).

2.2.2 Concrete Mixture

The Contractor shall design the concrete mixture proportions in accordance with American Concrete Institute (ACI) 211.1 and shall submit a concrete mixture proportioning report to the Contracting Officer for approval prior to placing any concrete in the field. Trial mixes shall be designed for maximum permitted slump and air content. The maximum allowable water cement ratio shall be that shown by curves to produce an average 90 day flexural strength 15 percent greater than specified. This submittal shall include descriptions, ASTM classifications, gradations, and specific gravity of all cements, pozzolans, and aggregates, descriptions and ASTM classifications of all admixtures, relative proportions of all components in the mixture, and test results conducted at three different water cement ratios. There shall be a minimum of 5 flexural strength breaks for each age and water cement ratio. These test results shall include as a minimum the date of each test, the flexural strengths at 7, 14, and 90 days, determined in accordance with ASTM C 78, correlations between the 7 , 14 , and 90 day strengths, slump in accordance with ASTM C 143, air content in accordance with ASTM C 231, and unit weight of the concrete in accordance with C 138. The cement content shall be reported as kg/m3 and admixture as gr/m3. The concrete mixture proportioning studies shall be conducted under the general supervision of a registered professional engineer currently licensed in a state or U.S. territory, and the mixture proportioning report shall be signed and sealed by this engineer. The testing shall be under the direct supervision of a technician certified as an ACI concrete laboratory testing technician or the equivalent. The laboratory doing this testing shall meet the requirements of ASTM C 1077 not less than 60 days before concrete pavement.

2.2.3 Cement Content

The cement content of the concrete will be determined by Contractor mix design. When a pozzolan is used, the total absolute volume will not exceed 25 percent of the solid volume of portland cement plus pozzolan.

2.2.4 Aggregate Content

The amount of each type aggregate used in the concrete mixture shall be as determined by the mixture proportioning studies.

2.2.5 Flexural Strength

The specified flexural strength is ~~.....~~4480 kPa at 14 days ~~age and ..... kPa at 90 days~~ when tested ~~in accordance~~ with ASTM C 78.

2.2.6 Air Content

The air content by volume based on measurements made immediately after discharge from the mixer shall be 5.5 percent plus or minus 1-1/2 percent when determined in accordance with ASTM C 231.

2.2.7 Slump

The concrete slump shall be between 0 and 50 mm for paving with fixed forms and between 0 and 32.5 mm for slipform paving method when determined in accordance with ASTM C 143.

PART 3 EXECUTION

3.1 PRODUCTION OF CONCRETE

3.1.1 Location of Plant

The batching plant or central mixing plant may be located on or off the Government premises as approved for paving with fixed forms but shall be located onsite if the slipform paving method is used.

3.1.2 Capacity

Each concrete mixer shall have a capacity of not less than 3.8 cubic meters. Batching, mixing, and hauling equipment shall have a capacity sufficient to maintain a forward movement of the paver of not less than 0.3 meters per minute.

3.1.3 Batching Plant

The batching plant shall conform to the requirements of CRD-C 95 and as specified; however, rating plates attached to batch plant equipment are not required.

3.1.3.1 Equipment

The batching controls shall be either semiautomatic or automatic. Semiautomatic batching system shall be provided with interlocks. Separate bins or compartments shall be provided for each size group of aggregate (and pozzolan) and cement. If both cement and pozzolan are used, they may be batched cumulatively provided portland cement is batched first. If measured by weight, water shall not be weighed cumulatively with another ingredient. Water batcher filling and discharging valves shall be so interlocked that the discharge valve cannot be opened before the filling valve is fully closed. An accurate mechanical device for measuring and dispensing each admixture shall be provided. Each dispenser shall be interlocked with the batching cycle and discharged automatically in a manner to obtain uniform distribution throughout the batch in the specified mixing period. (Where use of truck mixers makes this requirement impracticable, the admixture dispensers shall be interlocked with the sand batches.) Admixtures will not be combined before introduction in (sand or) water. The plant shall be arranged so as to facilitate the inspection of all operations at all times. Suitable facilities shall be provided for obtaining representative samples of aggregates from each bin or compartment.

3.1.3.2 Scales

Adequate facilities shall be provided for the accurate measurement and control of each of the materials entering each batch of concrete. The weighing equipment shall conform to the applicable requirements of NBS Handbook 44, except that the accuracy shall be within 0.2 percent of scale capacity. The Contractor sha11 provide standard test weights and any other auxiliary equipment required for checking the operating performance of each scale or other measuring device. Each weighing unit shall include a visible springless dial, which shall indicate the scale load at all stages of the weighing operation or shall include a beam scale with a beam balance indicator that will show the scale in balance at zero load and at any beam

setting. The indicator shall have an over and under travel equal to at least 5 percent of the capacity of the beam. The weighing equipment shall be arranged so that the concrete plant operator can conveniently observe the dials or indicators.

3.1.3.3 Batching Tolerances

3.1.3.3.1 Weighing Tolerances

Whichever of the following tolerances is greater shall apply, based on required scale reading.

Percentage of Required Materials	Weight	Percentage of Scale Capacity
Cement (and Pozzolan)	Plus or minus 1	plus or minus 0.3
Aggregate	Plus or minus 2	plus or minus 0.3
Water	Plus or minus 1	plus or minus 0.3
Admixture	Plus or minus 3	plus or minus 0.3

3.1.3.4 Moisture Control

The plant shall be capable of ready adjustment to compensate for the varying moisture contents of the aggregates and to change the weights of the materials being batched. An electric moisture meter complying with the provisions of CRD-C 143 shall be provided for measuring of moisture in the fine aggregate. The sensing element shall be arranged so that measurement is made near the batcher charging gate of the sand bin or in the sand batcher.

3.1.3.5 Recorders

Accurate recorders shall be provided for registering the quantities of each material as batched. The recorders shall be placed in a position convenient for observation by the plant operator and the Contracting Officer or his representative, and shall be housed in cabinets provided with locks. The recorders shall produce on visible tapes or charts a printed or autographic record of the weights of cement and aggregates as batched, and after the batchers are discharged the indicator shall return to zero. The weights or volumes of water as batched, and after the batchers are discharged the indicator shall return to zero. The weights or volumes of water as batched shall be recorded likewise if batched at the batching plant. The charts or tapes shall clearly indicate the types of material batched and the different types of mixes used. The charts or tapes shall show the time of day stamped or printed at intervals of not more than 15 minutes. The recorded charts or tapes shall become the property of the Government.

3.1.3.6 Protection

Weighing, indicating, recording, and control equipment shall be protected against exposure to dust and weather.

3.1.4 Concrete Mixers

3.1.4.1 General

The mixers shall not be charged in excess of the capacity recommended by the manufacturer. The mixers shall be operated at the drum or mixing blade speed designated on the manufacturer's data plate. The mixers shall be maintained in satisfactory operating condition, and the mixer drums shall be kept free of hardened concrete. Should any mixer at any time produce unsatisfactory results, its use shall be promptly discontinued until it is repaired.

3.1.4.2 Central Plant Mixers

Central plant mixers shall be tilting, nontilting, or vertical shaft type and shall be provided with an acceptable device to lock the discharge mechanism until the required mixing time has elapsed.

3.1.4.3 Mixing Time and Uniformity

For concrete plant mixers, in the absence of uniformity data, the mixing time for each batch after all solid materials are in the mixer, provided that all of the mixing water is introduced before one fourth of the mixing time has elapsed, shall be 90 seconds. These mixing times are predicated on operation at a designated speed and proper introduction of materials into the mixer. The mixing time may be reduced, if so approved, to the minimum time required to meet all the uniformity requirements. Mixer performance tests in accordance with CRD-C 55 at the proposed reduced mixing times shall be performed, and the mixer shall meet the following requirements when tested in accordance with CRD-C 55 as required in the paragraph CONTRACTOR QUALITY CONTROL:

Parameters Tested For:	Requirement, express as maximum permissible range in results of Tests and Samples taken from three locations in the concrete batch
Weight per cubic meter of mortars calculated to an air free basis, kg per cubic meter	32.0
Air content, volume percent of concrete	1.0
Slump, millimeters	25.0
Coarse aggregate content, portion by weight of each sample retained on 4.75 mm sieve, percent	6.0
Average compressive strength at 7 days for each sample based on average strength of all test specimens, percent	10.0
Water content, portion by weight of each sample passing 4.75 mm sieve, percent	1.5

3.1.4.4 Truck Mixers

Truck mixers shall not be used for slip form paving construction. Each truck shall be permanently marked with the volume of mixed concrete and the mixing and agitating speeds. Each truck shall be equipped with counters to determine the number of revolutions at mixing and agitating speeds. Concrete completely mixed in a truck mixer shall be mixed 70 to 100 revolutions at a designated mixing speed after all ingredients including mixing water have been charged into the drum. Concrete first partially intermingled in a concrete plant mixer (shrink mixed) a minimum time as required to combine the ingredients shall then be completely mixed in a truck mixer. The number of revolutions between 70 to 100 for truck mixed concrete and the number of revolutions for shrink mixed concrete shall be determined by uniformity tests as specified in requirements for mixer performance stated in paragraph CONTRACTOR QUALITY CONTROL. If requirements for the uniformity of concrete are not met with 100 revolutions of mixing after all ingredients including water are in the drum, the mixer shall not be used until the condition is corrected. Additional revolutions beyond the number determined to produce the required uniformity shall be at a designated agitating speed. Water shall not be added after the initial introduction of mixing water, except when on arrival at the jobsite the slump is less than specified and the water cement ratio is less than the approved mixture design permits. Additional water may be added to bring the slump within the specified range provided the approved water cement ratio is not exceeded. Water shall be injected into the mixer under pressure, and the drum or blades shall be turned a minimum of 30 additional revolutions at mixing speed. Water shall not be added to the batch at any later time.

3.2 TRANSPORTING EQUIPMENT

Transportation of concrete mixed completely in a stationary mixer from the mixer to the point of placement shall be by truck agitator, in a truck mixer operating at agitator speed, or in nonagitating equipment. All transporting equipment shall conform to ASTM C 94, except as modified herein. Vehicles transporting concrete mixed partially or completely in stationary mixers and truck mixers used for complete concrete mixing shall be capable of delivering and discharging the concrete without segregation. Equipment shall be provided that is capable of transferring the concrete from the transporting vehicle and distributing the concrete without segregation into its final position. The transfer and distribution of the concrete shall be by a mechanical spreader. When the stabilized subgrade or base course is of sufficient strength to support concrete transportation equipment without rutting or deformation, concrete may be discharged in front of the paver. The surface on which the pavement is being placed shall be maintained free from foreign materials or concrete that has begun to harden.

3.3 PLACING

3.3.1 General

Concrete may be placed between stationary (fixed) forms, or may be constructed to the desired cross section using slipform pavers. Concrete shall be deposited between the forms or placed with the slipform paver within 45 minutes from the time cement has been charged into the mixing drum if fixed form paving is used and 25 minutes if slip form paving is used. Concrete shall be deposited as close as possible to its final position in the pavement cross section. The placement of the concrete shall be

continuous and at a uniform rate without unscheduled stops except for equipment failure or other emergencies. Workmen with foreign material on their footwear or construction equipment that might deposit foreign material shall not be permitted to walk or operate in the concrete during placement and finishing operations. Placement of concrete shall not be started during rain or if an imminent chance of rain exists, unless approved by the Contracting Officer. Approval will be contingent on method and availability of protection materials. The paver finisher, whether a single combined machine or separate machines for each operation, shall have a combined gross weight of at least 3000 kilogram per meter of lane width and a combined powerplant capacity of at least 12.25 kiloWatts per meter of lane width.

3.3.2 Paver, Fixed Form and Slip Form Methods

The paver shall be self propelled and capable of spreading, consolidating, and shaping the plastic concrete to the desired cross section. The paver shall be capable of finishing the surfaces so that a minimum amount of hand finishing is required, and have sufficient weight and power to handle the amount of concrete required for the full lane width as specified. The mechanisms shall be easily adjustable in width. The paver shall be capable of operating across bulkhead forms and land ends so that it can start and finish pavinglanes at the bulkheads without the need for appreciable hand placing or finishing operations at these locations. When the paver approaches a header at the end of a paving lane, a sufficient amount of concrete shall be maintained ahead of the paver to allow a roll of concrete to spill over the header. The amount of extra concrete shall be sufficient to prevent the slurry that is formed and carried along ahead of the paver from being deposited adjacent to the header. The spud vibrators on the front of the paver should be brought as close to the header as possible before they are lifted. Additional consolidation shall be provided adjacent to the headers by hand manipulated vibrators. When the paver is operated between or adjacent to previously constructed pavement, the paver pan or screeds shall not lap onto adjacent surfaces. Rotating pipe or tube floats or finishers such as Clary screeds, rotating "bridge deck finishers" and similar equipment shall not be used. The use of any water being finished into the surface will be cause for rejection and removal and replacement of the slab.

3.3.3 Spreading

Spreading shall be by machine method, except when transporting equipment is permitted on the underlying material, in which case the concrete may be discharged directly in front of the paver. When placed directly in front of the paver, the concrete shall be spread evenly across the full width of the paving lane. Hand spreading will be permitted only where required for odd widths or shapes of slabs. Hand spreading shall be done with shovels; rakes shall not be used. Mechanical spreaders shall be designed and operated to distribute the plastic concrete uniformly across the full width of the paving lane. Machines that cause displacement of properly installed forms or ruts or indentations in the prepared underlying material and machines that cause frequent delays due to mechanical failures shall be replaced as directed. When the spreader rides the edges of previously constructed lanes, provisions shall be made to prevent damage to the previously constructed pavement. Where concrete is delivered to the form in truck mixers, suitable chutes may be used, provided windows cover essentially the entire area within the form. In no case is the dumping of concrete at one location and the running into place with vibration permitted. The spreading

of concrete shall be performed at such elevations, slightly above grades, that when properly consolidated, the surface will be at the elevation indicated.

3.3.4 Vibration

Concrete shall be consolidated with mechanical vibrating equipment immediately after spreading. Vibrating equipment shall be of the internal type, and the number of units and the power of each unit shall be adequate to properly consolidate the concrete with the vibration spacing used. The vibrating unit shall be mounted on a frame or on the paver and equipped with suitable controls so that all vibrators may be operated at any desired depth within the slab or completely withdrawn from the concrete, as required. The spacing of vibrating units that extend into the slab at intervals across the paving lane shall be as necessary to properly consolidate the concrete, but the clear distance between the units shall not exceed 750 mm. The outside elements of the internal spud vibrator units shall be approximately 0.25 m from the edge of the slab. Vibrators of this type shall be inserted into the concrete to a depth that will provide the best consolidation but not closer to the underlying material than 50 mm. Concrete in odd shaped slabs or in locations inaccessible to the vibrating equipment above shall be vibrated with a hand manipulated vibrator. Vibrators shall not be used to transport or spread the concrete in the forms. Spud vibrators shall operate at a frequency of not less than 8000 impulses per minute and tube vibrators at a frequency of not less than 5000 impulses per minute when in the concrete. Excessive vibration will not be permitted. Vibrators shall not be operated in the concrete at one location for more than 20 seconds. Forward motion of the paver shall cease as soon as a vibrator becomes inoperable and shall not start until the vibrator is repaired or replaced. At least one additional vibrator, or sufficient parts for replacing and repairing vibrators or vibrator assemblies for each paving train, shall be maintained at the site at all times.

3.3.5 Placing Reinforcing Steel

The type and amount of steel reinforcement shall be as shown on the contract drawings. Bar mat reinforcement shall be positioned on suitable chairs before concrete placement. Regardless of the placement procedure, the reinforcing steel shall be free from coatings that could impair bond between the steel and the concrete, and laps in the reinforcement shall be as indicated.

3.3.6 Placing During Cold Weather

Concrete placement shall be discontinued when the air temperature reaches 5 degrees C. and is falling. Placement may begin when the air temperature reaches 3 degrees C. and is rising. Provision shall be made to protect the concrete from freezing during the specified curing period. If necessary to place concrete when the temperature of the air, aggregates, or water is below 3 degrees C, placement shall be approved in writing. Approval shall be contingent upon full conformance with the following provisions. The underlying material shall be prepared and protected so that it is entirely free of frost when the concrete is deposited. Mixing water and/or aggregates shall be heated as necessary to result in the temperature of the in place concrete being between 10 and 30 degrees C. Methods and equipment for heating shall be approved. The aggregates shall be free of ice, snow, and frozen lumps before entering the mixer. Covering and other means shall

be provided for maintaining the concrete at a temperature of at least 10 degrees C. for not less than 72 hours after placing, and at a temperature above freezing for the remainder of the curing period. Concrete damaged by freezing shall be removed and replaced as specified in paragraph REMOVAL AND REPLACEMENT OF DEFECTIVE PAVEMENT AREAS.

3.3.7 Placing During Hot Weather

During periods of hot weather when the maximum daily air temperature is likely to exceed 30 degrees C, the following precautions shall be taken. The (forms and the underlying material) (forms) (underlying material) shall be sprinkled with water immediately before placing the concrete. The coarse aggregate stockpile shall be sprinkled with water. Concrete shall be placed at the coolest temperature practicable, a retarding admixture shall be used, and in no case shall the temperature of the concrete when placed exceed 32 degrees C. Aggregates and/or mixing water shall be cooled as necessary. Concrete shall be placed continuously and rapidly at a rate of not less than 30 meters of paving lane per hour. The finished surfaces of the newly laid pavement shall be kept damp by applying a waterfog or mist with approved spraying equipment until the pavement is covered by the curing medium. If necessary, wind screens shall be provided to protect the concrete from an evaporation rate in excess of 1 kilogram per square meter per hour. When conditions are such that problems with plastic cracking can be expected, and particularly if any plastic cracking begins to occur, the Contractor shall immediately take such additional measures as necessary to protect the concrete surface. Such measures shall consist of wind screens, more effective fog sprays and similar measures commencing immediately behind the paver. If these measures are not effective in preventing plastic cracking, paving operations shall be immediately stopped.

3.4 FINISHING

Finishing operations shall be started immediately after placement of the concrete. Finishing shall be by the machine method except that where indicated; the hand method will be permitted on odd slab widths or shapes and in event of breakdown of the mechanical equipment to finish concrete. The sequence of operations shall be finishing, floating, straightedging, texturing, and then edging of joints. Finishing equipment and tools shall be maintained clean and in an approved condition. Surface checks shall be made regularly and paving operations immediately halted and made whenever compensation is inadequate. Supplemental hand finishing for machine finished pavement shall be kept to an absolute minimum, and any operation which requires appreciable supplemental hand finishing shall be immediately stopped and proper adjustments made or the equipment replaced. Clary screeds and other rotating tube type equipment will not be permitted.

3.4.1 Machine Finishing with Fixed Forms

3.4.1.1 Equipment

The finishing machines shall be of ample weight and power for proper finishing of the concrete. The finishing machine shall be designed and operated to strike off, screed, and consolidate the concrete. Screed and float adjustments of these machines shall be checked at the start of each day's paving operations and more often as required. Machines that cause displacement of side forms or that cause frequent delays due to mechanical failure shall be replaced. When finishing machines ride the edge of a

previously constructed slab, provision shall be made to protect the surface of these slabs.

3.4.1.2 Transverse Finishing

As soon as placed, the concrete shall be accurately struck off and screeded to the crown and cross section shown and to such elevation that when consolidated and finished, the surface of the pavement will be free from porous places and will be at the required grade. The finishing machine shall make as many trips over each area of pavement as necessary to compact the concrete and produce a surface of uniform texture, true to grade. Water shall not be added to the concrete used to fill low spots or to facilitate finishing operations. Excessive manipulation that brings mortar and water in excess of 3 mm thick to the surface will not be permitted, and any equipment that cannot produce the required compaction and surface finish without an excessive number of trips will be considered unsatisfactory. The top of the form or pavement edge upon which the finishing machine travels shall be kept clean.

3.4.1.3 Mechanical Floating

After completion of screeding, the mechanical float may be operated to smooth and finish the pavement to grade. The float shall be operated so as to maintain contact with the surface at all times. If required, additional concrete shall be placed and screeded, and the float operated over the same area until a satisfactory surface is produced.

3.4.1.4 Other Types of Finishing Equipment

Concrete finishing equipment of types other than specified above may be used on a trial basis; however, Clary screeds or other rotating tube type finishers shall not be used. The use of equipment that fails to produce finished concrete of the quality and consistency required by these specifications shall be discontinued, and the concrete shall be finished with approved equipment and in the manner specified above.

3.4.2 Hand Finishing

Hand finishing operations shall be used only for those unusual slabs as specified previously at the beginning of this main paragraph.

3.4.2.1 Equipment

A strike and tamping template and a longitudinal float shall be provided for hand finishing. The template shall be at least 0.25 meters longer than the width of pavement being finished, of an approved design, and sufficiently rigid to retain its shape, and shall be constructed of metal or other suitable material shod with metal.

3.4.2.2 Finishing and Floating

As soon as placed and vibrated, the concrete shall be struck off and screeded to the crown and cross section and to such elevation above grade that when consolidated and finished, the surface of the pavement will be at the required elevation. The entire surface shall be tamped, and the tamping operation continued until the required compaction and reduction of internal and surface voids are accomplished.

3.4.3 Surface Correction and Testing

After finishing is completed but while the concrete is still plastic, minor irregularities and score marks in the pavement surface shall be eliminated by means of straightedges. Straightedges shall be 3.66 m in length and shall be operated from the sides of the pavement and from bridges. A straightedge operated from the side of the pavement shall be equipped with a handle 1 meter longer than one-half the width of the pavement. The surface shall then be tested for trueness with a 3.66 m straightedge held in successive positions parallel and at right angles to the center line of the pavement, and the whole area covered as necessary to detect variations. The straightedge shall be advanced along the pavement in successive stages of not more than one-half the length of the straightedge. Depressions shall be immediately filled with freshly mixed concrete, struck off, consolidated, and refinished. Projections above the required elevation shall also be struck off and refinished. The straightedge testing and finishing shall continue until the entire surface of the concrete is free from observable departure from the straightedge and conforms to the surface requirements specified in paragraph EVALUATION AND ACCEPTANCE. Long handled, flat "bull floats" shall be used sparingly and only to corrected minor, scattered surface defects caused by inadequate results of operation of the finishing machine. If frequent use of bull floats is necessary, the paving operation shall be stopped and the finishing machine (or other operations) adjusted to eliminate the surface defects. Finishing with hand floats and trowels shall be held to the absolute minimum necessary. Extreme care shall be taken to prevent overfinishing joints and edges. The surface finish of the pavement shall be produced essentially by the finishing machine and not by subsequent hand finishing operations. All hand finishing operations shall be subject to approval and shall be modified when directed.

3.4.4 Texturing

Before the surface sheen has disappeared and before the concrete becomes nonplastic, the surface of the pavement shall be given a texture as follows:

3.4.4.1 Broom Texturing

Surface texture shall be applied using an approved hand or mechanical stiff bristle broom of a type that will produce uniform corrugations. For hand brooming, the brooms shall have handles longer than half the width of slab to be finished. The hand brooms shall be drawn transversely across the surface from the center line to each edge with slight overlapping strokes. For mechanical operations, the broom shall be operated with the length of the broom parallel to the pavement centerline. The broom shall be capable of traversing the full width of the pavement in a single pass at a uniform speed and with a uniform pressure. Successive passes of the broom shall be overlapped the minimum necessary to obtain a uniformly textured surface. Brooms shall be washed thoroughly and dried at frequent intervals during use. Worn or damaged brooms shall be removed from the jobsite. Brooming should be completed before the concrete has dried to the point where the surface will be unduly torn or roughened, but after drying has progressed enough so that the mortar will not flow and attenuate the sharpness of the corrugations. Specific requirements for the texturing will be given on the plans, but in general the corrugations should be uniform in appearance and approximately 1.5 mm in depth but not more than 3 mm in depth.

3.4.5 Edging

After texturing has been completed, the edge of slabs along the forms, along the edges of slipformed lanes and at the joints, where indicated or directed, shall be carefully finished with an edging tool to form a smooth rounded surface of the required radius. Tool marks shall be eliminated, and the edges shall be smooth and true to line. No water shall be added to the surface during edging.

3.4.6 Outlets in Pavement

Recesses for the tie-down anchors, lighting fixtures, and other outlets in the pavement shall be constructed to conform to the details and dimensions shown. The concrete in these areas shall be carefully finished to provide a surface of the same texture as the surrounding area that will be within the requirements for plan grade and surface smoothness stated in paragraph EVALUATION AND ACCEPTANCE.

3.5 FORM REMOVAL

Forms shall remain in place at least 12 hours after the concrete has been placed. When conditions are such that the early strength gain of the concrete is delayed, the forms shall be left in place for a longer period as directed. Forms shall be removed without injuring the concrete. Bars or heavy tools shall not be used against the concrete in removing the forms. Any concrete found defective after form removal shall be promptly satisfactorily repaired.

3.6 CURING

3.6.1 General

Concrete shall be protected against loss of moisture and rapid temperature changes for at least 7 days from the beginning of the curing operation. Unhardened concrete shall be protected from rain and flowing water. All equipment needed for adequate curing and protection of the concrete shall be on hand and ready for use before actual concrete placement begins. Protection shall be provided as necessary to prevent cracking of the pavement due to temperature changes during the curing period. If any selected method of curing does not afford the proper curing and protection against concrete cracking, the damaged pavement will be removed and replaced, and another method of curing shall be employed as directed.

3.6.2 Membrane Curing

A uniform coating of white pigmented membrane curing compound shall be applied to the entire exposed surface of the concrete as soon as the free water has disappeared from the surface and/or immediately after the forms are removed and in no case longer than 1 hour after the removal of forms. Concrete shall not be allowed to dry before the application of the membrane. If any drying has occurred, the surface of the concrete shall be moistened with a fine spray of water, and the curing compound applied as soon as the free water disappears. The curing compound shall be applied to the finished surfaces by means of an approved automatic spraying machine. The spraying machine shall be self propelled and shall straddle the newly paved lane. The machine shall have one or more spraying nozzles that can be controlled and operated to completely and uniformly cover the pavement surface with the

required amount of curing compound. The curing compound in the drum used for the spraying operation shall be thoroughly and continuously agitated mechanically throughout the full depth of the drum during the application. Air agitation may be used only to supplement mechanical agitation. Spraying pressure shall be sufficient to produce a fine spray as necessary to cover the surface thoroughly and completely with a uniform film. Spray equipment shall be maintained and the spray nozzle shall have an adequate wind guard. The curing compound shall be applied with an overlapping coverage that will give a two coat application at a coverage of not more than 10 square meters per liter for each coat. A one coat application may be applied provided a uniform application is obtained and coverage does not exceed more than 5 square meters per liter. The application of curing compound by hand operated pressure sprayers will be permitted only on odd widths or shapes of slabs where indicated and on concrete surfaces exposed by the removal of forms. When the application is made by hand operated sprayers, the second coat shall be applied in a direction approximately at right angles to the direction of the first coat. The compound shall form a uniform, continuious, cohesive film that will not check, crack, or peel and that will be free from pinholes and other discontinuities. If pinholes, abrasions, or other discontinuities exist, an additional coat shall be applied to the affected areas within 30 minutes. Concrete surfaces that are subjected to heavy rainfall within 3 hours after the curing compound has been applied shall be resprayed by the method and at the coverage specified above. Areas where the curing compound is damaged by subsequent construction operations within the curing period shall be resprayed. The contraction joint sawcuts shall be resprayed after cutting. Approved standby facilities for curing concrete pavement shall be provided at an accessible location at the jobsite for use in the event of mechanical failure of the spraying equipment or other conditions that might prevent correct application of the membrane curing compound at the proper time. Concrete surfaces to which membrane curing compounds have been applied shall be adequately protected during the entire curing period from pedestrian and vehicular traffic, except as required for joint sawing operations and surface tests, and from any other possible damage to the continuity of the membrane.

3.7 JOINTS

3.7.1 General

Joints shall conform to the details indicated and shall be perpendicular to the finished grade of the pavement. Transverse expansion and contraction joints shall be straight and continuous from edge to edge of the pavement. No change from the jointing pattern shown on the drawings shall be made without written approval of the Contracting Officer.

3.7.2 Longitudinal Construction Joints

Longitudinal construction joints shall be located as indicated. Dowels and tie bars shall be installed in the longitudinal construction joints, or the edges shall be thickened as required and as indicated. Dowels and tie bars shall be installed in conformance with paragraph DOWELS AND TIE BARS. When the concrete is placed using stationary forms, metal forms securely fastened to the concrete form shall be used to form the keyway in the plastic concrete. When the concrete is placed using slipform pavers, the keyway shall be formed in the plastic concrete by means of metal forms permanently attached to the side forms or by means of preformed metal keyway liners, which are inserted during the slipform operations and may be left in place.

The dimensions of the keyway forms shall not vary more than plus or minus 3 mm from the dimensions indicated and shall not deviate more than plus or minus 6.5 mm from the mid-depth of the pavement. Thereshall be no abrupt offset either horizontally or vertically in the completed keyway. If a length of completed keyway of 1.2 meters or more fails to meet the above tolerances, dowels shall
be installed in that part of the joint by drilling holes in the hardened concrete and grouting the dowels in place with epoxy resins using approved materials and procedures. If a total length of keyway of 3.5 meters or more failing to meet the above tolerances occurs in any individual slab (sum of all deficient areas on both sides of slab), the entire slab shall be removed and replaced as previously specified. Longitudinal construction joints shall be edged and subsequently sawed to provide a groove at the top conforming to the details and dimensions indicated.

3.7.3 Transverse Construction Joints

Transverse construction joints shall be installed at the end of each day's placing operations and at any other points within a paving lane when concrete placement is interrupted for 30 minutes or longer. These joints shall be located at a planned joint. When concrete placement cannot be continued, the transverse construction joint shall be installed at a planned transverse joint. Transverse construction joints shall be doweled as specified. When using slipform pavers, transverse construction joints shall be constructed by utilizing headers, and the very minimum amount of hand placement and finishing techniques. Pavement shall be constructed with the slipform paver as close to the header as possible and run out completely past the header.

3.7.4 Contraction Joints

Transverse and longitudinal contraction joints shall be of the weakened plane or dummy type and shall be constructed as indicated. Longitudinal contraction joints shall be constructed by sawing a groove in the hardened concrete with a power driven saw in conformance with requirements for sawed joints unless otherwise approved. Transverse contraction joints shall be constructed in conformance with requirements for sawed joints or insert type contraction joints, unless otherwise approved.

3.7.4.1 Sawed Joints

Sawed joints shall be constructed by sawing a groove in the concrete with a 3.175 mm (1/8 inch) blade to the full depth as indicated. After expiration of the curing period, the upper portion of the groove shall be widened by sawing to the width and depth indicated. The time of sawing shall vary depending on existing and anticipated weather conditions and shall be such as to prevent uncontrolled cracking of the pavement. Sawing of the joints shall commence as soon as the concrete has hardened sufficiently to permit cutting the concrete without chipping, spalling, or tearing. The sawed faces of joints will be inspected for undercutting or washing of the concrete due to the early sawing, and sawing shall be delayed if undercutting is sufficiently deep to cause structural weakness or excessive roughness in the joint. The sawing operation shall be carried on as required during both day and night regardless of weather conditions. The joints shall be sawed at the required spacing consecutively in the sequence of the concrete placement. A chalk line or other suitable guide shall be used to mark the alinement of the joint. The saw cut shall not vary more

than 12.5 mm from the true joint alinement. Before sawing a joint, the concrete shall be examined closely for cracks, and the joint shall not be sawed if a crack has occurred near the planned joint location. Sawing shall be discontinued when a crack develops ahead of the saw cut. Workmen and inspectors shall wear clean, rubber soled footwear, and the number of persons walking on the pavement shall be limited to those actually performing the sawing operation. Immediately after the joint is sawed, the saw cut and adjacent concrete surface shall be thoroughly flushed with water until all waste from sawing is removed from the joint. Any membrane cured surface damaged during the sawing operations shall be resprayed as soon as the surface becomes dry. The sawing equipment shall be adequate in the number of units and the power to complete the sawing at the required rate. An ample supply of saw blades shall be available on the job before concrete placement is started, and at least one standby sawing unit in good working order shall be available at the jobsite at all times during the sawing operation.

3.7.5 Slip Joints

Slip joints shall be constructed at thickened edge construction joints where specifically indicated on the drawings. Only the specified slip joint filler shall be used to construct slip joints.

3.8 DOWELS AND TIE BARS

3.8.1 Fixed Form Installation

Fixed form installation of dowels and tie bars shall be by the bonded-in-place method. Tie bars and dowels shall be prepared and placed across joints where indicated, correctly alined, and securely held in the proper horizontal and vertical position during placing and finishing operations, except that tie bars specified along longitudinal contraction joints may be installed in front of the paver by insertion into the unconsolidated concrete. Installation by removing and replacing dowels in preformed holes will not be permitted. Dowels in longitudinal and transverse construction joints shall be held securely in place parallel to the surface, as indicated, by means of devices fastened to the form. Dowels in expansion joints and tie bars and dowels installed within the paving lane shall be held securely in place, as indicated, by means of rigid metal frames or basket assemblies of approved type. The assemblies shall consist of a framework of metal bars or wires arranged to provide rigid support for the dowels and the tie bars throughout the paving operation, with a minimum of four continuous bars or wires extending across the paving lane. The dowels shall be welded to the assembly or held firmly by mechanical locking arrangements that will prevent the dowels from rising, sliding out, or becoming distorted during paving operations. The dowel assemblies shall be held securely in the proper location by means of suitable pins or anchors. When split dowels are used, the female portion of the split dowel shall be bonded in the initially placed pavement lane. The female portion of the split dowel shall be securely fastened to the pavement form and shall maintain the proper position and alinement of the dowel during concrete placement so that no mortar or other foreign material will enter the socket or coupling. Before the split dowels are assembled, the external and internal threads shall be cleaned thoroughly to remove all cement, cement mortar, grit, dirt, and other foreign matter. In the final assembly, a minimum torque of 270 Newton-meters shall be applied. The spacing of dowels in longitudinal construction joints shall be as indicated, except that where

the planned spacing cannot be maintained because of form length or interference with form braces, closer spacing with additional dowels shall be used. Dowels in longitudinal joints shall be omitted when the center of the dowel is located within a horizontal distance from a transverse joint equal to one-fourth of the slab thickness. The method used in holding dowels in position shall develop such accuracy that the error in alinement of any dowel from its required position after the pavement has been finished shall be not greater than 1 mm per 0.1 meter. The Contractor shall furnish an approved template for checking the position of the dowels. The portion of each dowel intended to move within the concrete or expansion cap shall be painted with one coat of red lead or blue lead paint. The painted portion shall be wiped clean and coated with a thin even film of lubricating oil before the concrete is placed. Pipe used as dowels shall be filled with a stiff sand-asphalt mixture or portland cement mortar, or the ends of the pipe dowels shall be fitted with tight fitting plugs of an approved material extending into the pipe.

3.8.2 Existing Concrete Installation

For existing concrete, dowels shall be placed in horizontal and vertical positions across the joints where indicated. Dowels shall be placed by bonding the dowels into holes drilled into the hardened concrete. The grouted in place method shall be used. Holes approximately 3 mm greater in diameter than the dowels shall be drilled with rotary type core drills that must be held securely in place to drill perpendicularly into the vertical face of the pavement slab. Percussion type drills may be used provided that spalling of concrete does not occur. Any damage of the concrete shall be repaired by the Contractor in a method approved by the Contracting Officer. Dowels shall be bonded in the drilled holes using an epoxy resin material as specified in paragraph MATERIALS. Installation procedures shall be adequate to ensure that the area around dowels is completely filled with epoxy grout. The method used for installing and maintaining dowels in position shall develop such accuracy that the error in alinement of any dowel from its required position shall be not greater than 1 mm per 0.1 meter. The vertical dowel alignment shall be checked by placing a 3.05 m (10 foot) straightedge on the surface of the pavement over the top of the dowels and measuring the vertical distance between the straightedge and beginning and ending point of the dowel. The horizontal alignment shall be checked with a framing square.

3.9 SEALING JOINTS

Joints shall be sealed immediately following curing of the concrete or as soon thereafter as weather conditions permit. Sawing of filler type joints shall be accomplished immediately before sealing of the joints. Joints shall be sealed as specified in SECTION: JOINT SEALING IN CONCRETE.

3.9.1 Joint Seal Reservoir

After the expiration of the curing period a grove for joint sealer shall be formed as specified below. The top portion of fiberboard fillers or sawable preformed inserts shall be removed by sawing with a power saw to form a groove of required dimensions. The sawing shall be so accomplished as to abrade the concrete surface in the joint groove and remove all traces of the filler or insert. Nonsawable insert material shall be removed as prescribed by the manufacturer. The dimensions and characteristics of the groove thus formed shall be as shown. The grooves shall have edges free of revels and

spalls. The grooves shall be straight from edge to edge of the pavement and shall not vary more than 12.5 mm from alinement.

3.10 REMOVAL AND REPLACEMENT OF DEFECTIVE PAVEMENT AREAS

Defective pavement areas shall be removed and replaced as specified herein with pavements of the thickness and quality required by these specifications. In no case shall the removal and replacement of concrete result in a slab less than the full slab width and length. The efective pavement shall be removed carefully so that the adjacent pavement will not be damaged and the existing keys or dowels at the joints will be left intact. When a portion of the unfractured slab is replaced, a saw cut full pavement depth shall be made transversely across the slab in the required location, and the concrete shall be removed to provide an essentially vertical face in the remaining portion of the slab. Prior to placement of the fresh concrete, the face of the slab shall be cleaned of debris and loose concrete, and then thoroughly coated with epoxy resin. The epoxy resin coating shall be applied by scrubbing a thin coat into the surface with a stiff bristle brush. Strips of polyethylene sheeting shall be placed on the vertical joint faces of adjacent slabs at the juncture with the slab to be patched as a bond breaking medium. Placement of the fresh portland cement concrete shall be accomplished while the epoxy resin is still tacky and in such manner that the grout coating will not be removed. Longitudinal and transverse joints of the replaced slab or portion thereof shall be constructed as indicated. The joints shall be sealed as specified in SECTION: JOINT SEALING IN CONCRETE PAVEMENTS FOR ROADS AND AIRFIELDS. The replaced pavements will be paid for at the contract price, but no payment will be made for the defective pavements removed or for the cost of removing the defective pavements.

3.11 REPAIRS OF DEFECTIVE PAVEMENT SLABS

Broken slabs, random cracks, nonworking contraction joints near cracks, and spalls along joints and cracks shall be replaced or repaired as specified hereinafter at no cost to the Government.

3.11.1 Broken Slabs in Nonreinforced Pavements

Broken slabs shall be removed and replaced in conformance with Paragraph: REMOVAL AND REPLACEMENT OF DEFECTIVE PAVEMENT AREAS hereinafter.

3.11.2 Grooving and Sealing Cracks in Nonreinforced Pavements

Random cracks penetrating the full depth of the pavement shall be grooved and sealed. The top of the crack shall be grooved to a minimum depth of 20 mm and to a width not less than 10 mm nor more than 15 mm by means of an approved grooving machine. The grooving machine shall be of the vertical rotary cutting type and shall be capable of following closely the path of the crack and of widening the top of the crack to the required section without spalling or otherwise damaging the concrete. Loose and fractured concrete shall be removed, and the groove shall be thoroughly cleaned and sealed as specified in SECTION: JOINT SEALING IN CONCRETE PAVEMENTS. Random cracks that are tight and that do not penetrate the full depth of the pavement shall be left undisturbed. When necessary, the depth of crack penetration shall be determined by inspection of cores not less than 100 mm in diameter drilled by the Contractor at his expense at locations directed. The core holes shall be refilled with portland cement concrete bonded to the

pavement with epoxy resin grout. In addition, when a longitudinal crack is continuous across one or more slabs and penetrates the full depth of pavement, core holes not less than 150 mm in diameter shall be drilled through the full depth of slab at both ends of the crack. In the operation to drill cores at the longitudinal crack ends, the core bits shall be so positioned that the core removed will include not more than 75 mm of the crack. Sandblasting and high pressure air jets shall be used to remove any fines near the apparent ends of the crack, to permit accurate determination of the ends of the crack. All fines, dust, and other loose material on the wall of all cored holes shall be removed by scrubbing with a stiff bristle brush, followed by washing and dewatering of the core hole. All core holes shall be refilled with epoxy resin concrete. A prime coat of epoxy resin binder shall be applied and brushed into the vertical wall of the core hole. Placement of the epoxy resin concrete shall be accomplished before the prime coat becomes dry. The epoxy resin concrete shall be placed in layers not over 150 mm thick. The time interval between placement of additional layers shall be such that the temperature of the epoxy resin concrete does not exceed 60 degrees C at any time during hardening.

3.11.3 Nonworking (Uncracked) Contraction Joints

When a transverse random crack terminates in or crosses a transverse contraction joint, the uncracked portion of the joint shall be filled with epoxy resin mortar or grout and the crack shall be routed and sealed. When a transverse random crack approximately parallels the planned contraction joint and is within a distance of 25 percent of the slab length from a contraction joint in nonreinforced pavement, the crack shall be routed and sealed, and the joint shall be filled with epoxy resin grout or mortar. When a transverse random crack is more than 25 percent of slab length from the nearest contraction joint in nonreinforced pavement, both the joint and the crack shall be sealed. Joints to be filled with epoxy resin mortar or grout shall be thoroughly cleaned, primed, and filled. Cleaning and sealing of cracks and joints shall be as specified in SECTION: JOINT SEALING IN CONCRETE PAVEMENTS FOR AIRFIELDS.

3.11.4 Spalling Along Joints and Cracks

Spalls shall be repaired by making a saw cut outside the spalled area and to a minimum depth of 25 mm. The concrete between the saw cut and the joint shall be chipped out to solid concrete. The cavity thus formed shall be thoroughly cleaned with compressed air sandblasting, or other methods to remove all loose material. A prime coat of epoxy resin binder shall be applied to the dry, cleaned surface of all sides of the cavity, except the joint face. The prime coat shall be applied in a thin coating and scrubbed into the surface with a stiff bristle brush. Portland cement concrete will not be permitted unless the general depth of the cavity is at least 75 mm. Filling shall be accomplished immediately following application of the prime coat. The epoxy resin concrete or mortar shall be placed in the cavity in layers not exceeding 50 mm thick. The time interval between placement of additional layers shall be such that the temperature of the epoxy resin concrete does not exceed 60 degrees C at any time during hardening. Mechanical plate, screed, float vibrators, or hand tampers shall be used to consolidate the concrete or mortar. Excess mortar or concrete on the adjacent surfaces of the hardened concrete shall be removed before it hardens. If the spalled area to be patched abuts a working joint which penetrates the full depth of a slab, an insert or other bond breaking medium shall be used to maintain working joints during the repair work. Surface

embedment of a flexible polyethylene or other suitable type hose shall be used for forming a groove along the working crack to be filled with appropriate type of joint sealing material. The hose shall be removed carefully before the concrete hardens sufficiently to form a high bond. The groove shall be thoroughly cleaned and sealed with a sealer as specified in SECTION: JOINT SEALING IN CONCRETE PAVEMENTS FOR AIRFIELDS.

3.11.5 Epoxy Resin Mixtures

3.11.5.1 Temperature, Moisture, and Protection for Repairs

Pavement repairs using epoxy resin grout and epoxy resin binder, as described herein, shall be accomplished when the atmospheric and pavement temperatures are above 10 degrees C and less than 38 degrees C and remain in this range for at least 24 hours after the repairs are made. When pavement repairs are required to be made at temperatures other than in the above range, artificial environment shall be provided as directed for placing and curing. Epoxy resin grout, concrete, or mortar shall not be placed when free water is present on the contact surface of the area to be repaired. Repairs shall be protected from rain for at least 12 hours after placement and from all types of traffic for 24 hours.

3.11.5.2 Aggregates for Epoxy Mortar and Concrete

The coarse and fine aggregates used in the epoxy resin concrete and mortar shall conform to requirements for composition, quality, and particle shape specified hereinbefore in the MATERIALS paragraph for coarse aggregate and fine aggregate for use in portland cement concrete. The coarse and fine aggregates used in the preparation of epoxy resin concrete and epoxy resin mortar shall be uniformly dry and shall be conditioned to a temperature of 20 degrees C to 30 degrees C prior to mixing the epoxy resin binder. The maximum size of aggregate shall not exceed 19.0 mm and shall not exceed 1/4 of the thickness of the layer being placed or the opening being filled. Gradations of the coarse and fine aggregate shall conform to the following requirements when tested in accordance with Corps of Engineers Specifications CRD-C 103.

3.11.5.2.1 Coarse Aggregate for Epoxy Concrete

Sieve Designation Std. Sq. Mesh	Percentage Passing, By Weight 12.5 to 2.36 mm	9.5 t0 1.18 mm
19.0 mm	100	---
12.5 mm	90-100	100
9.50 mm	40-70	85-100
4.75 mm	0-15	10-30
2.36 mm	0-5	0-10
1.18 mm	---	0-5

3.11.5.2.2 Fine Aggregate for Epoxy Concrete and Mortars:

Sieve Designation Std. Sq. Mesh		Percentage Passing, By Weight Epoxy Concrete Natural Aggregates	Epoxy Mortar Manufactured Aggregates
4.75 mm	100	---	---
2.36 mm	80-90	100	100

1.18 mm	60-80	60-100	60-100
600 (m	30-60	35-70	35-70
300 (m	12-30	15-35	20-40
150 (m	0-10	2-15	10-25
75 (m	0-5	0-5	0-10

The aggregate shall be well graded from coarse to fine.

3.11.5.3 Epoxy Resin Binder and Grout shall conform to the requirements of paragraph MATERIALS.

3.11.5.4 Trial Batches of Epoxy Resin Concrete and Mortars

Since variations in aggregate gradation and particle shape affect the proportions required to obtain an economical mixture with satisfactory placing and finishing characteristics, small laboratory trial batches shall be made by the Contractor prior to field placement of any mixture. The polysulfide curing agent component shall be added gradually to the epoxy resin component with constant stirring until a uniform mixture is obtained. The rate of stirring shall be so controlled as to entrain a minimum amount of air. A power driven air or spark proof mixer with propeller type blade shall be used for mixing the two components of the epoxy resin binder or epoxy resin grout, and a hemispherical bottom polyethylene or metal container shall be used for the mixing of epoxy resin mortar or concrete. Power mixers may be used if specifically approved. The proportion of aggregate to epoxy resin binder for concrete shall be within the range of 6 to 10 parts aggregate to 1 part binder, by weight. The proportions for epoxy resin mortar shall be within the range of 3 to 7 parts fine aggregate to 1 part epoxy resin binder, by weight. Trial batches shall be prepared under the observation of the Contracting Officer, and the proportions finally selected shall be approved prior to use for repairs.

3.11.5.5 Field Mixing and Batch Size

The maximum individual batch size for field repairs shall be in the range of 100 to 140 kilograms. Mechanical drum type mixers or hand mixing in metal pans shall be used for preparing epoxy resin concrete and mortar mixtures. The epoxy resin and the polysulfide curing agent components shall be thoroughly mixed as specified, before transferring the binder to the pan or drum type mixer. In the preparation of the epoxy resin concrete, the fine aggregate shall be added to the binder until a rich mortar consistency is reached. The coarse aggregate shall then be added until the capacity of the mortar is attained while retaining placeability and finishing properties.

3.11.6 Repair of Adjoining Existing Pavement

Where pavements to be constructed under this contract abut existing concrete pavements, all spalls, voids, and damaged or deteriorated concrete which are present at the exposed face of the existing pavement at the joint between the two shall be repaired at areas shown on the drawings before constructing the new pavement. All repair required shall be performed in accordance with the requirements specified herein for repair of defective newly constructed pavement. The cost of all such repair work shall be included in the unit price for concrete and there shall be no additional cost to the Government for such work.

3.12 PAVEMENT PROTECTION

The Contractor shall protect the pavement against all damage prior to final acceptance of the work by the Government. Aggregates and similar construction materials shall not be piled on constructed pavements. Traffic shall be excluded from the pavement by erecting and maintaining barricades and signs until the concrete is at least 14 days old, or for a longer period if so directed. As a construction expedient in paving intermediate lanes between newly paved lanes, operation of the hauling equipment will be permitted on the pavement after the pavement has been cured for 7 days and the joints have been sealed or otherwise protected. Also, the subgrade planer, concrete finishing machines, and similar equipment may be permitted to ride upon the edges of previously constructed slabs when the concrete has attained a minimum flexural strength of 2,750 kPa and adequate means are furnished to prevent damage to the slab edge. The pavement carrying traffic or equipment shall be kept clean, and spillage of materials or concrete shall be cleaned up immediately upon occurrence. For fill-in lanes, equipment will be used that will not damage or spall the edges or joints of the previously constructed pavement.

3.13 CONTRACTOR QUALITY CONTROL

3.13.1 General

The Contractor shall perform the inspection and tests described and meeting the requirements for inspection details and frequency of testing specified. Based upon the results of these inspections and tests, the Contractor shall take the action and submit reports as required below, and any additional tests to insure that the requirements of these specifications are met.

3.13.2 Inspection Details and Frequency of Testing

The following number of tests will be the minimum acceptable for each type of operation:

3.13.2.1 Fine Aggregate

3.13.2.1.1 Grading

Twice during each shift when the concrete plant is operating, there shall be one sieve analysis and fineness modulus determination in accordance with ASTM C 136 and CRD-C 104 for the fine aggregate (or for each fine aggregate, if it is batched in more than one size of classification). The location at which samples are taken may be selected by the Contractor as the most advantageous for control. However, the Contractor is responsible for delivering fine aggregate to the mixer within specification limits.

3.13.2.1.2 Fineness Modulus Control Chart

Results of the fineness modulus determination shall be grouped in sets of three consecutive tests, and the average and range of each group plotted on a control chart. The upper and lower control limits for the average shall be drawn 0.10 units above and below the average fineness modulus of all samples previously taken, and the upper control limit for the range shall be 0.28.

3.13.2.1.3 Moisture Content

In the opinion of the Contracting Officer, when the electric moisture meter is not operating satisfactorily, at least two pairs of tests for moisture content in accordance with ASTM C 70, ASTM C 566, or CRD C 112 will be made during each 8 hour period of mixing plant operation. The two tests in each pair shall be spaced 1 hour apart, and the times for the pairs shall be selected randomly within the shift. An additional test shall be made whenever the slump is shown to be out of control or excessive variation in workability is reported by the placing foreman. (When the electric moisture meter is operating satisfactorily, at least two direct measurements of moisture content shall be made per week to check the calibration of the meter. Variability within a 1 or 8 hour period may be determined by meter readings.)

3.13.2.1.4 Deleterious Aggregate

Fine aggregate shall be tested for deleterious material as specified herein. Tests shall be performed at the start of concrete operations and at one week intervals thereafter.

3.13.2.2 Coarse Aggregate

3.13.2.2.1 Grading

Twice during each shift in which the concrete plant is operating a sieve analysis shall be made in accordance with ASTM C 136 for each size of coarse aggregate. Samples shall be taken from the batch plant bins. Each test record shall show the results of the current test as well as the average results of the five most recent tests including the current test. Tests at other locations, when necessary for control, shall be recorded also. For these tests the Contractor may adopt limits for control coarser than the specification limits to allow for degradation during handling. Where facilities are available to test samples five times as large as those required in ASTM C 136, no averaging is necessary. When, in the opinion of the Contracting Officer, a problem exists in connection with coarse aggregate particle shape, daily tests shall be made in accordance with CRD-C 119.

3.13.2.2.2 Moisture Content

A test for moisture content of each size of coarse aggregate shall be made at least once a shift. When two consecutive readings for the smallest size coarse aggregate differ by more than 1 percent, the frequency of testing shall be increased to that specified for fine aggregate.

3.13.2.2.3 Deleterious Material

Each size of coarse aggregate shall be tested for deleterious aggregate as specified herein. Tests shall be performed at the start of the concrete operations and at one week intervals thereafter.

3.13.2.3 Scales

The accuracy of the scales shall be checked by test weights, as directed by the Contracting Officer, for conformance with the applicable requirements of NBS Handbook 44. Such tests shall be made whenever there are variations in

properties of the fresh concrete, which could result from batching errors. Once a week the accuracy of each batching device shall be checked during a weighing operation by noting and recording the required weight and the actual weight batched.

3.13.2.4 Batch Plant Control

When the concrete plant is operating, the measurement of all constituent materials including cement, each size of aggregate, water, and admixtures shall be continuously controlled. The aggregate weights and the amount of water added to compensate for free moisture in the aggregates shall be adjusted as necessary. The amount of the air entraining agent shall be adjusted to control the air content within specified limits. A report shall be prepared indicating the type and source of cement used, the amount and source of admixtures used, the aggregate source, the required aggregate and water weights per cubic meter, the amount of water as free moisture in each size of aggregate, and the batched aggregate and water weights per cubic meter for each class of concrete batched during the plant operation.

3.13.2.5 Concrete

3.13.2.5.1 General

Concrete samples shall be furnished by the Contractor and shall be taken by the Contractor in the field to determine the slump, air content, and strength of the concrete. Test beams shall be made for determining conformance with the strength requirements of these specifications and, when required, for determining the time at which pavements may be placed into service. The air content shall be determined in accordance with ASTM C 231. Slump tests shall be made in accordance with ASTM C 143. Test beams shall be molded and cured in accordance with ASTM C 31 and as specified below. Steel beam molds shall be used for molding the specimens. The Contractor shall furnish all materials, labor, and facilities required for molding, curing, testing, and protecting test beams at the site. Curing facilities for test beams shall include furnishing and operating water tanks equipped with temperature control devices that will automatically maintain the temperature of the water at 23 plus or minus 3 degrees C. The Contractor shall furnish and maintain at the site boxes or other facilities suitable for storing the specimens while in the mold at a temperature of 23 plus or minus 5 degrees C. Tests of the fresh concrete and of the hardened concrete beams will be made by and at the expense of the Contractor.

3.13.2.5.2 Specimens for Strength Tests

One set of ..... test beams shall be made for every 100 cubic meters or less of concrete placed daily. Test beams shall be molded and cured in conformity with ASTM C 31, and tested in accordance with ASTM C 78.

3.13.2.5.3 Air Content

In addition to air content tests when beams are fabricated, two tests for air content shall be made on randomly selected batches of concrete for each 500 cubic meters, or fraction thereof, of concrete placed during each shift. Additional tests shall be made when excessive variation in workability is reported by the placing foreman or Government inspector. The average of each set of two tests shall be plotted on a control chart on which the average is set at 5.5 percent and the upper and lower control limits at 7

and 4 percent, respectively. The range shall be plotted on a control chart on which the upper control limit is 1-1/2 percent.

3.13.2.5.4 Slump

In addition to slump tests made when test beams are fabricated, four slump tests shall be made on randomly selected batches of each class of concrete for each 8 hour period of concrete production. Additional tests shall be made when excessive variation in workability is reported by the placing foreman or Government inspector. The average of each set of two tests shall be plotted on a control chart. The upper and lower limits are to be set to the applicable limits specified in paragraph titled (Mixture Proportioning) Slump. The range shall be plotted on a control chart on which the upper control limit is 25 mm for fixed form paving and 12.5 mm for slipform paving.

3.13.2.6 Placing

The placing foremen shall supervise all placing operations, shall determine that the correct class of concrete is placed in each location as directed by the Contracting Officer, and shall be responsible for measuring and recording concrete temperatures, ambient temperature, weather conditions, time of placement, volume placed, and method and location of placement.

3.13.2.7 Curing

No curing compound shall be applied until the Contractor has verified that the compound is properly mixed and ready for spraying. At the end of each operation, the Contractor shall determine the quantity of compound used, as well as the area of concrete surface covered, and compute the rate of coverage in square meters per liter, noting whether coverage is uniform.

3.13.2.8 Cold Weather Placing

At least once during each shift an inspection shall be made of all areas subject to cold weather protection. Deficiencies shall be noted. During removal of protection, the concrete and ambient temperature shall be measured at least hourly.

3.13.2.9 Hot Weather Placing

The Contractor shall take and record the temperature of the concrete mixture at 30 minute intervals during hot weather placement. The forms and underlying material shall be inspected to assure that they are sprinkled with water immediately before the concrete is placed and any deficiencies noted. The finished concrete shall be inspected to assure that it is kept damp until the curing medium is applied and any deficiencies noted.

3.13.2.10 Finished Concrete Surface

The Contractor shall perform the testing required to insure that thefinished surface conforms to the plan grade, surface smoothness, and edge slump.

3.13.3 Action Required

3.13.3.1 Fine Aggregate

3.13.3.1.1 Grading

When the amount retained on any sieve is outside the specification limits, the fine aggregate shall be resampled and retested. If there is another failure on the same sieve, the fact shall be reported immediately to the Contracting Officer. All such tests shall be included in the control charts. Whenever a point, either for the average or the range, is beyond one of the control limits, the frequency of testing shall be doubled. If two consecutive points are beyond the control limits, the process shall be considered out of control. The Contracting Officer shall be notified, and immediate steps shall be taken to rectify the situation. After two consecutive points have fallen within the control limits, testing at the normal frequency may be resumed.

3.13.3.1.2 Moisture Content

Whenever the moisture content of the fine aggregate changes by 0.5 percent or more, the scale settings for the fine aggregate batcher and water batcher shall be adjusted (directly or by means of a moisture compensation device). If, at any time, the requirements for moisture variation are not met, the Contracting Officer shall be notified and immediate steps shall be taken to reduce the variation.

3.13.3.2 Coarse Aggregate

3.13.3.2.1 Grading

When the amount passing any sieve is outside the specfication limits, the coarse aggregate shall be resampled and retested. If the second sample fails on the same sieve, that fact shall be reported to the Contracting Officer. When two consecutive averages of five tests (or two consecutive tests where large samples are used) are outside of the specification limits, that fact shall be reported to the Contracting Officer and immediate steps shall be taken to correct the grading.

3.13.3.2.2 Moisture

Whenever the moisture content of the smallest size of coarse aggregate changes by 0.5 percent or more, the scale settings for the aggregate batcher and water batcher shall be adjusted (directly or by means of a moisture compensation device). If, at any time, the requirements for moisture variation are not met, the Contracting Officer shall be notified and immediate steps taken to reduce the variation.

3.13.3.2.3 Particle Shape

When testing for particle shape is required, two consecutive failures in the same sieve size shall be reported immediately to the Contracting Officer, who shall provide instructions as to the necessity for corrective action.

3.13.3.3 Scales

Whenever either the weighing or the batching accuracy is found not to comply with specification requirements, the plant shall not be operated until necessary adjustments or repairs have been made. Discrepancies in recording accuracies shall be corrected immediately.

3.13.3.4 Concrete

3.13.3.4.1 Strength

The results of the 7, 14, and 90 day strength test shall be plotted on a control chart. When more than 20 percent of the consecutive individual tests for 7 and 14 day strength tests are less than the specified value or the average of any five consecutive tests is less than the specified value, the Contracting Officer shall be notified and the Contractor shall change the mixture proportions to increase the strength of the mixture.

3.13.3.4.2 Air Content

Whenever points on the control chart approach the upper or lower control limits, an adjustment should be made in the amount of the air entraining admixture batched. If a single test result is outside the specification limit, such an adjustment is mandatory. As soon as practicable after each adjustment, another test shall be made to verify the correctness of the adjustment.

3.13.3.4.3 Slump

Whenever points on the control chart approach the upper or lower control limits, an adjustment should be made in the batch weight of water and fine aggregate. When a single slump is outside the control limits, such an adjustment is mandatory. As soon as practicable after each adjustment, another test shall be made to verify the correctness of the adjustment. Whenever the slump departs more than 7.5 mm over the specified limit by the contract, the concrete shall not be delivered to the paver. Whenever two consecutive slump tests that were made during a period when there was no adjustment of batch weights produce a point on the control chart above the upper control limit, the slump shall be considered out of control and the additional testing for aggregate moisture content required above shall be undertaken.

3.13.3.5 Curing

When the coverage rate of the curing compound is less than that specified or when the coverage is not uniform, the entire surface shall be sprayed again.

3.13.3.6 Cold Weather Protection

The Contracting Officer shall be notified whenever the concrete temperature during the period of protection or protection removal fails to comply with the specifications, and immediate steps shall be taken to correct the situation.

3.13.3.7 Hot Weather Placing

When the temperature of the concrete mixture exceeds 30 degrees C, mixing and placing shall be terminated and the Contracting Officer notified.

3.13.3.8 Mixer Performance

At the start of concrete placing, and at least once every 3 months when concrete is being placed, the uniformity of concrete shall be determined. The initial and every fourth test shall be performed in accordance with the

regular test of CRD-C 55. Other tests shall be performed in accordance with abbreviated tests of CRD-C 55. Whenever adjustments in the mixer or increases in mixing times are necessary because of failure of any mixer to comply, the mixer shall be retested after adjustments. For complete testing, three different batches of concrete shall be tested. For abbreviated tests, one batch shall be tested. Results of tests shall be reported in writing.

3.13.4 Reports

All results of tests conducted at the project site shall be reported as specified in the section "Contractor Quality Control." Each week the report shall include the updating of control charts covering the entire period from the start of the construction season through the current week. During periods of cold weather protection, reports of pertinent temperatures shall be made daily. These requirements do not relieve the Contractor of the obligation to report certain failures immediately as required in preceding paragraphs. Such reports of failure and the action taken shall be confirmed in writing in the routine reports. The Contracting Officer has the right to examine all Contractor quality control records.

3.14 CURBS FOR ROAD PAVEMENT

Construction of portland cement concrete curb, gutter, and combination curb and gutter shall be as specified in SECTION: CONCRETE SIDEWALKS AND CURBS AND GUTTERS.

END OF SECTION

SECTION 02551

BITUMINOUS PAVING FOR ROADS, STREETS AND OPEN STORAGE AREAS

PART 1 GENERAL

1.1 REFERENCES

The publications listed below form a part of this specification to the extent referenced. The publications are referred to in the text by basic designation only.

AMERICAN SOCIETY FOR TESTING AND MATERIALS (ASTM)

ASTM C 29/C 29M	(1989; Rev A, 1991) Unit Weight and Voids in Aggregate
ASTM C 88	(1990) Soundness of Aggregates by Use of Sodium Sulfate or Magnesium Sulfate
ASTM C 127	(1988; Rev 1993) Specific Gravity and Absorption of Coarse Aggregate
ASTM C 128	(1993) Specific Gravity and Absorption of Fine Aggregate
ASTM C 131	(1989) Resistance to Degradation of Small-Size Coarse Aggregate by Abrasion and Impact in the Los Angeles Machine
ASTM C 183	(Rev 1995) Sampling and the Amount of Testing of Hydraulic Cement
ASTM D 75	(1987; Rev 1992) Sampling Aggregates
ASTM D 422	(1963; R 1990) Particle-Size Analysis of Soils
ASTM D 2041	(1995) Theoretical Maximum Specific Gravity and Density of Bituminous Paving Mixtures
ASTM D 3381	(1992) Viscosity-Graded Asphalt Cement for Use in Pavement Construction
ASTM D 3515	(1989) Hot-Mixed, Hot-Laid Bituminous Paving Mixtures

DEPARTMENT OF THE ARMY, CORPS OF ENGINEERS HANDBOOK FOR CONCRETE AND CEMENT

CRD C 649	(1995) Standard Test Method for Unit Weight, Marshall Stability, and Flow of Bituminous Mixtures
CRD C 650	(1995) Standard Test Method for Density and Percent Voids in Compacted Bituminous Paving Mixtures

CRD C 651	(1995) Standard Gyratory Testing Machine Method for Design of Hot-Mix Bituminous Pavement Mixtures
CRD C 652	(1995) Standard Test Method for Measurement of Reduction in Marshall Stability of Bituminous Mixtures Caused by Immersion in Water

CORPS OF ENGINEERS (COE)

COE CRD-C 119	(1953; Rev Jun 1963) Flat and Elongated Particles in Coarse Aggregate

1.2 SUBMITTALS

Government approval is required for submittals with a "GA" designation; submittals having an "FIO" designation are for information only. The following shall be submitted in accordance with Section 01300 SUBMITTALS:

SD-09, Reports

Tests, Preproduction; GA.

Test reports for the following shall be submitted for approval prior to the start of production and shall meet all requirements specified in PART 2(PRODUCTS).

a. Course Aggregate

- Percentage of wear (ASTM C-131)
- Percentage of loss (ASTM C-88 and ASTM C-131)
- Percentage of fractured faces
- Percent flat and elongated pieces (CRD-C-119)

b. Fine Aggregate

- Percent of natural sand content
- Percent of fractured faces
- Percentage of loss (ASTM C-88)

c. Aggregate Gradation

d. Job Mix Formula plots and test results including index of retained stability, and type of asphalt used.

Tests, Field; GA.

Evaluation of test section and "lot" production placed in accordance with Paragraph: ACCEPTABILITY OF WORK.

1.3 PLANT, EQUIPMENT, MACHINES, AND TOOLS

1.3.1 General

The bituminous plant shall be of such capacity to produce the quantities of bituminous mixtures required. Hauling equipment, paving machines, rollers, miscellaneous equipment, and tools shall be provided in sufficient numbers and capacity and in proper working condition to place the bituminous paving mixtures at a rate equal to the plant output.

1.3.2 Mixing Plants

The mixing plant shall be an automatic or semiautomatic controlledcommercially manufactured unit designed and operated to consistently produce a mixture within the job-mix formula (JMF).

1.3.3 Straightedge

The Contractor shall furnish and maintain at the site, in good condition, one 3-meter straightedge for each bituminous paver. Straightedge shall be made available for Government use. Straightedges shall be constructed of aluminum or other lightweight metal and shall have blades of box or box-girder cross section with flat bottom reinforced to insure rigidity and accuracy. Straightedges shall have handles to facilitate movement on pavement.

1.4 WEATHER LIMITATIONS

Unless otherwise directed, bituminous courses shall not be constructed when temperature of the surface of the existing pavement or base course is below 4 degrees C or wet. When paving in temperatures below 10 degrees C or during the months between 1 October and 1 April pneumatic tired rollers shall be used as required in paragraph "PLACING". Tack coat shall be applied when temperatures are above 4 degrees C and surfaces are dry.

1.5 PROTECTION OF PAVEMENT

After final rolling, no vehicular traffic of any kind shall be permitted on the pavement until the pavement has cooled to 60 degrees C.

1.6 GRADE AND SURFACE-SMOOTHNESS REQUIREMENTS

Finished surface of bituminous courses, when tested as specified below and in paragraph "ACCEPTABILITY OF WORK," shall conform to gradeline and elevations shown and to surface-smoothness requirements specified.

1.6.1 Plan Grade

The grade of the completed surface shall not deviate more than 1 mm from the plan grade.

1.6.2 Surface Smoothness

When a 3-meter straightedge is laid on the surface parallel with the centerline of the paved area or transverse from crown to pavement edge, the surface shall vary not more than 6 mm from the straightedge.

1.7 GRADE CONTROL

Lines and grades shall be established and maintained by means of line and grade stakes placed at site of work in accordance with the SPECIAL CLAUSES.

Finished pavement gradelines and elevations shown shall be established and controlled at site of work by the Contractor.

1.8 SAMPLING AND TESTING

1.8.1 Aggregates

1.8.1.1 General

Samples of aggregates shall be taken by the Contractor prior to the start of production for aggregate quality tests and mix design. Unless otherwise directed, ASTM D 75 shall be used in sampling coarse and fine aggregate, and ASTM C 183 shall be used in sampling mineral filler. All tests necessary to determine compliance with requirements specified herein will be made by the Contractor.

1.8.1.2 Sources

Sources of aggregates shall be selected well in advance of the time the materials are required in the work. Test reports shall be submitted before starting production, indicating that aggregates meet all quality requirements specified herein. Approval of the source of aggregate does not relieve the Contractor of responsibility for delivery at the jobsite of aggregates that meet the requirements specified herein.

1.8.2 Bituminous Materials

Samples of bituminous materials and mixes shall be the Contractor's responsibility and shall be performed by an approved independent commercial testing laboratory in accordance with Section 01400.

1.9 DELIVERY, STORAGE, AND HANDLING OF MATERIALS

1.9.1 Mineral Aggregates

Mineral aggregates shall be delivered to the site of the bituminous mixing plant and stockpiled in such manner as to preclude fracturing of aggregate particles, segregation, contamination, or intermingling of different materials in the stockpiles or cold-feed hoppers. Mineral filler shall be delivered, stored, and introduced into the mixing plant in a manner to preclude exposure to moisture or other detrimental conditions.

1.9.2 Bituminous Materials

Bituminous materials shall be maintained at appropriate temperature during storage but shall not be heated by application of direct flame to walls of storage tanks or transfer lines. Storage tanks, transfer lines, and weigh buckets shall be thoroughly cleaned before a different type or grade of bitumen is introduced into the system. The asphalt cement shall be heated sufficiently to allow satisfactory pumping of the material; however, the storage temperature shall be maintained below 149 degrees C.

1.10 ACCESS TO PLANT AND EQUIPMENT

The Contracting Officer shall have access at all times to all parts of thepaving plant for checking adequacy of the equipment in use; inspectingoperation of the plant; verifying weights, proportions, and

character of materials; and checking temperatures maintained in preparation of the mixtures.

PART 2 PRODUCTS

2.1 BITUMINOUS HOT MIX

The mix design shall consist of coarse aggregate, fine aggregate, bituminous material, and if required, mineral filler or approved additives, and shall conform to the requirements contained in paragraphs "PROPORTIONING OF MIXTURE" and "ACCEPTABILITY OF WORK."

2.1.1 Aggregates

Aggregates shall consist of crushed stone, crushed gravel, crushed slag, screening, sand, and mineral filler, as required. The portion of materials retained on the No. 4 sieve shall be known as coarse aggregate, the portion passing the No. 4 sieve and retained on the No. 200 sieve as fine aggregate, and the portion passing the No. 200 sieve as mineral filler. Aggregate gradation shall conform to gradation(s) specified in TABLE I. TABLE I is based on aggregates of uniform specific gravity; the percentage passing various sieves may be changed by the Contracting Officer when aggregates of varying specific gravities are used. Adjustments of percentage passing various sieves may be changed by the Contracting Officer when aggregates vary by more than 5 mm specific gravity.

TABLE I

AGGREGATE GRADATION

	Sieve Size	Percent Passing
Washington	16 mm	100
	13 mm	90-100
	9 mm	75-90
	6 mm	55-75
	No. 10	32-48
	No. 40	11-24
	No. 80	6-15
	No. 200	3-7

2.1.1.1 Coarse Aggregate

Coarse aggregate shall consist of clean, sound, durable particles meeting the following requirements.

a. Percentage of loss shall not exceed 40 after 500 revolutions, as determined in accordance with ASTM C 131.

b. Percentage of loss shall not exceed 18 after five cycles performed in accordance with ASTM C 88, using magnesium sulfate.

c. The dry weight of crushed slag shall not be less than 1.2 gram per cubic meter, as determined in accordance with ASTM C 29.

d. Crushed gravel retained on the No. 4 sieve and each coarser sieve shall contain at least 75 percent by weight of crushed pieces having one or

more fractured faces with the area of each face equal to at least 75 percent of the smallest midsectional area of piece. When two fractures are contiguous, the angle between planes of fractures shall be at least 30 degrees to count as two fractured faces.

e. Particle shape of crushed aggregates shall be essentially cubical. The quantity of flat and elongated particles in any sieve size shall not exceed 20 percent by weight, when determined in accordance with COE CRD-C 119.

2.1.1.2 Fine Aggregate

Fine aggregate shall consist of clean, sound, durable particles including natural sand or crushed stone, slag, or gravel that meets requirements for wear and soundness specified for coarse aggregate. Fine aggregate produced by crushing gravel shall have at least 90 percent by weight of crushed particles having two or more fractured faces in the portion retained on the No. 30 sieve. This requirement shall apply to the material before blending with natural sand when blending is necessary. Quantity of natural sand to be added to the mixture shall not exceed 25 percent by weight of coarse and fine aggregate and material passing the No. 200 sieve. Natural sand shall be clean and free from clay and organic matter. Percentage of loss shall not exceed 15 after 5 cycles of the soundness test performed in accordance with ASTM C 88, using magnesium sulfate.

2.1.1.3 Mineral Filler

Grain size shall be determined in accordance with ASTM D 422.

2.1.2 Bituminous Material

Asphalt cement shall conform to ASTM D 3381, AR 4000W.

2.1.3 Additives

The use of additives such as antistripping and antifoaming agents is subject to approval.

2.2 PROPORTIONING OF MIXTURE

2.2.1 Job Mix Formula

The Job-Mix Formula shall be developed by the Contractor using CRD C 651 using Marshall Mix Design 50 blow criteria. The mix design shall meet the test requirements presented in this section and shall show the following:

a. Graphical Plots for a minimum of four asphalt contents for:

Stability	vs. A/C content
Unit wt. Mix	vs. A/C content
Percent Total Voids Filled	vs. A/C content
Percent Voids, Total Mix	vs. A/C content
Flow	vs. A/C content

The optimum asphalt content shall be calculated by averaging the peaks of curves 1 thru 4 and the stability, flow, and voids must fall within

criteria specified in paragraph: Test Properties of Bituminous Mixtures.

b. The percentage and specific gravity of each bin fraction of aggregate. (This will be used to determine the theoretical specific gravity.)
c. Absorption of the entire blend.

d. Specific gravity of the asphalt.

e. Reduction in Stability by Immersion.

Previously established test results will be accepted provided that the tests were performed within the last 2 years and conform to requirements specified above. The job-mix-formula will be allowed tolerances given in Table 2 herein.

TABLE II. JOB-MIX TOLERANCES

Material	Tolerance, Plus or Minus
Aggregate passing No. 4 sieve or larger	5 percent
Aggregate passing Nos. 8, 16, 30, and 50 sieves	4 percent
Aggregate passing Nos. 100 and 200 sieves	2 percent
Bitumen	0.30 percent
Temperature of mixing	4 degrees C

2.2.2 Test Properties of Bituminous Mixtures

Finished mixture shall meet requirements described below when tested in accordance with CRD C 659 and CRD C 650. All samples will be compacted with 50 blows of specified hammer on each side of sample. The bituminous mixture shall meet the requirements specified below.

2.2.2.1 Stability, Flow, and Voids

Requirements for stability, flow, and voids are shown in TABLES III and IV for nonabsorptive and absorptive aggregates, respectively.

TABLE III. NONABSORPTIVE-AGGREGATE MIXTURE

Stability minimum	
Flow maximum, 0.25 mm units	
Voids total mix, percent (1)	3-5
Voids filled with bitumen, percent (2)	75-85

TABLE IV. ABSORPTIVE-AGGREGATE MIXTURE

Stability minimum	
Flow maximum, 0.25 mm units	
Voids total mix, percent (1)	2-4
Voids filled with bitumen, percent (2)	80-90

a. When the water-absorption value of the entire blend of aggregate does not exceed 2.5 percent as determined in accordance with ASTM C 127 and ASTM C 128, the aggregate is designated as nonabsorptive. The theoretical specific gravity computed from the apparent specific gravity or ASTM D 2041 will be used in computing voids total mix and

voids filled with bitumen, and the mixture shall meet requirements in TABLE III.

b. When the water-absorption value of the entire blend of aggregate exceeds 2.5 percent as determined in accordance with ASTM C 127 and ASTM C 128, the aggregate is designated as absorptive. The theoretical specific gravity computed from the bulk-impregnated specific gravity method contained in ASTM D 2041 shall be used in computing percentages of voids total mix and voids filled with bitumen; the mixture shall meet requirements in TABLE IV.

2.2.2.2 Stability

The index of retained stability must be greater than 75 percent as determined by CRD C 652. When the index of retained stability is less than 75, the aggregate stripping tendencies may be countered by the use of hydrated lime. The hydrated lime is considered as mineral filler and should be considered in the gradation requirements. The amount of hydrated lime added to bitumen shall be sufficient, as approved, to produce an index of retained stability of not less than 75 percent. No additional payment will be made to the Contractor for addition of lime antistripping agent required.

2.3 TACK COAT MATERIALS

Emulsified asphalt shall conform to ASTM D 977 and D 2397 grades RS-1, SS-1, SS-1h, CRS-1, CSS-1, or CSS-1h.

PART 3 EXECUTION

3.1 BASE COURSE CONDITIONING

The surface of the base course will be inspected for adequate compaction and surface tolerances specified in Section titled: BASE COURSE. Unsatisfactory areas shall be corrected.

3.2 EXISTING PAVEMENT CONDITIONING

Before construction of an asphalt concrete pavement on or abutting existing paved surfaces, the existing pavement shall be conditioned as stated in WSDOT Standard Specification Section 5-04.3(5)A, "Preparation of Existing Surfaces."

3.3 PREPARATION OF BITUMINOUS MIXTURES

Rates of feed of aggregates shall be regulated so that the moisture content and temperature of aggregates will be within specified tolerances. Aggregates, mineral filler, and bitumen shall be conveyed into the mixer in proportionate quantities required to meet the JMF. Mixing time shall be as required to obtain a uniform coating of the aggregate with the bituminous material. Temperature of bitumen at time of mixing shall not exceed 150 degrees C. Temperature of aggregate and mineral filler in the mixer shall not exceed 162.5 degrees C when bitumen is added. Overheated and carbonized mixtures or mixtures that foam shall not be used.

3.4 STORAGE OF BITUMINOUS PAVING MIXTURE

Storage shall conform to the applicable requirements of ASTM D 3515.

3.5 TRANSPORTATION OF BITUMINOUS MIXTURE

Transportation from paving plant to site shall be in trucks having tight, clean, smooth beds lightly coated with an approved releasing agent to prevent adhesion of the mixture to the truck bodies. Excessive releasing agent shall be drained prior to loading. Each load shall be covered with canvas to protect mixture from weather and to prevent loss of heat. Loads that have crusts of cold, unworkable material or that have become wet will be rejected. Hauling over freshly placed material will not be permitted.

3.6 SURFACE PREPARATION OF UNDERLYING COURSE

Prior to placing the underlying course shall be cleaned of all foreign or objectionable matter. Power brooms and hand brooms shall be used to clean underlying asphalt courses.

3.7 TACK COATING

Contact surfaces of previously constructed pavement, curbs, manholes, and other structures shall be sprayed with a tack coat.

3.7.1 Tack Coat Rate

Tack coat shall be applied at the rate of 0.15 to 0.45 liters per square meter. The exact quantities within the ranges specified may be varied to suit field conditions.

3.7.2 Application

Following preparation and subsequent inspection of the surface, a tack coat shall be applied at the specified rate with uniform distribution over the surface to be treated. Following application of the tack coat and prior to application of the pavement, the material shall be allowed to cure (all moisture must be allowed to evaporate out of the emulsion). The tacked area shall be maintained by protecting the surface against damage and by repairing and retacking deficient areas at no additional cost to the Government. No more tack coat material shall be placed than can be covered in the same day. If required, clean, dry sand shall be spread to effectively blot up excess bituminous material.

3.8 PLACING

Bituminous courses shall be constructed only when the base course or existing pavement is dry. Bituminous mixtures shall not be placed without ample time to complete spreading and rolling during daylight hours, unless approved satisfactory artificial lighting is provided. If bituminous materials are placed in more than 1 lift, the longitudinal joints shall be offset by at least 0.3 m. The type of rollers to be used and their relative position in the compaction sequence shall generally be the Contractor's option, provided specification densities are attained. An exception shall be that the pneumatic tired roller shall be used between 1 October and 1 April or when ambient temperature is below 10 degrees C. Coverages with a vibratory steel wheel roller may precede pneumatic tired rolling.

3.8.1 General Requirements for Use of Mechanical Spreader

Range of temperatures of mixtures, when dumped into the mechanical spreader, shall be as determined by the Contracting Officer. Mixtures having temperatures less than 110 degrees C when dumped into the mechanical spreader shall not be used. The mechanical spreader shall be adjusted and the speed regulated so that the surface of the course being laid will be smooth and continuous without tears and pulls, and of such depth that, when compacted, the surface will conform to the cross section indicated. Material placed shall conform to requirements specified in paragraph "ACCEPTABILITY OF WORK." Placing of the mixture shall be as nearly continuous as possible, and speed of placing shall be adjusted, as directed, to permit proper rolling. When segregation occurs in the mixture during placing, the spreading operation shall be suspended until the cause is determined and corrected.

3.8.2 Placing Strips Succeeding Initial Strips

In placing each succeeding strip after initial strip has been spread and compacted as specified below, the screed of the mechanical spreader shall overlap the previously placed strip 100 mm to 150 mm and be sufficiently high so that compaction produces a smooth dense joint. Mixture placed on the edge of a previously placed strip by the mechanical spreader shall be pushed back to the edge of the strip by use of a lute. Excess mixture shall be removed and wasted.

3.8.3 Handspreading in Lieu of Machine Spreading

In areas where the use of machine spreading is impractical, the mixture shall be spread by hand. Spreading shall be in a manner to prevent segregation. The mixture shall be spread uniformly with hot rakes in a loose layer of thickness that, when compacted, will conform to required grade, density, and thickness.

3.9 COMPACTION OF MIXTURE

Rolling shall begin as soon after placing as the mixture will bear a roller without undue displacement. Delays in rolling freshly spread mixture will not be permitted. Vibratory rollers shall not be operated in the vibratory mode when the internal temperature of the mix is less than 80 degrees C. Tests for smoothness shall be made by the Contractor during construction. Deficiencies shall be corrected so that the finished course will conform to requirements for smoothness specified herein. Rolling shall be continued until a mat and joint density of 95.0 to 100.0 percent of density of laboratory-compacted specimens of the same mixture is obtained. After paving operations are complete, crown, grade, and smoothness will be checked by the Contractor for compliance and will be evaluated as specified in paragraph "ACCEPTABILITY OF WORK."

3.9.1 Correcting Deficient Areas

Mixtures that become contaminated or are defective shall be removed to the full thickness of the course. Edges of the area to be removed shall be cut so that sides are perpendicular and parallel to the direction of traffic and so that the edges are vertical. Edges shall be sprayed with a Bituminous Tack Coat. Fresh paving mixture shall be placed in the excavated areas in sufficient quantity so that the finished surface will conform to grade and smoothness requirements. Paving mixture shall be compacted to the density

specified herein. Skin patching of an area that has been rolled shall not be permitted.

3.10 JOINTS

3.10.1 General

Joints between old and new pavements, between successive work days, or joints that have become cold (less than 80 degrees C) shall be cut back and tack coated to insure continuous bond and proper compaction between the old and new sections of the course. All joints shall have the same texture and smoothness as other sections of the course. Tack coat material shall be applied far enough in advance of placement of a fresh mixture to insure adequate curing. Care shall be taken to prevent damage or contamination of the sprayed surface.

3.10.2 Transverse Joints

The roller shall pass over the unprotected end of a strip of freshly placed material only when placing is discontinued or delivery of the mixture is interrupted to the extent that the material in place may become cold. In all cases, prior to continuing placement, the edge of previously placed pavement shall be cut back to expose an even vertical surface for full thickness of the course. In continuing placement of a strip, the mechanical spreader shall be positioned on the transverse joint so that sufficient hot mixture will be spread to obtain a joint after rolling that conforms to the required density and smoothness specified herein.

3.10.3 Longitudinal Joints

Edges of a previously placed strip shall be prepared as specified above and such that the pavement in and immediately adjacent to the joint between this strip and the succeeding strip meets the requirements for grade, smoothness, and density specified in paragraph "ACCEPTABILITY OF WORK."

3.11 ACCEPTABILITY OF WORK

3.11.1 General

A lot shall be that quantity of construction that will be evaluated for compliance with specification requirements. A lot shall be equal to one days production. The Contractor shall perform all tests as specified herein at the frequency specified in Section titled: CONTRACTOR QUALITY CONTROL.

3.11.1.1 Lot Evaluation

Each lot shall be evaluated for gradation, asphalt content, density, and surface smoothness.

3.11.1.2 Lot Failure

When a lot of material fails to meet the specification requirements, that lot shall be removed and replaced.

3.11.2 Aggregate Gradation

The aggregate gradation shall fall within the job mix tolerances specified in Table II.

3.11.3 Asphalt Content

The asphalt content must be within .30 percent of the job mix formula.

3.11.4 Density

The average mat and joint densities will be expressed as a percentage of the laboratory density. The laboratory density for each lot will be determined in accordance with CRD C 649.

3.11.4.1 Field Density

The field density shall be determined and the average mat and joint density shall be 95 percent compacted specimens of the same mixture.

3.11.5 Surface Smoothness

After completion of final rolling of a lot, the compacted surface will be tested by the Contractor in the presence of a Contracting Officer with a 3.05-meter straightedge. Measurements will be made perpendicular to and across all mats at distances along the mat not to exceed 7.5 m. Location and deviation from straightedge of all measurements will be recorded. Any joint or mat area surface deviation which exceeds the tolerance given in paragraph "GRADE AND SURFACE-SMOOTHNESS REQUIREMENTS" by more than 50 percent shall be corrected to meet the specification requirements. The Contractor shall remove the deficient area and replace with fresh paving mixture at no additional cost to the Government. Sufficient material shall be removed to allow at least 25 mm of asphalt concrete to be placed. Skin patching for correcting low areas or planing for correcting high areas shall not be permitted.

END OF SECTION

SECTION 02580

PAVEMENT MARKINGS

PART 1 GENERAL

1.1 REFERENCES

The publications listed below form a part of this specification to the extent referenced. The publications are referred to in the text by basic designation only.

AMERICAN ASSOCIATION OF STATE HIGHWAY AND TRANSPORTATION OFFICIALS (AASHTO)

AASHTO M 247	(1981; Rev 1986) Glass Beads Used in Traffic Paint
AASHTO M 248	(1991I) Ready-Mixed White and Yellow Traffic Paints

AMERICAN SOCIETY FOR TESTING AND MATERIALS (ASTM)

ASTM D 792	(1991) Density and Specific Gravity (Relative Density) of Plastics by Displacement
ASTM D 4505	(1992) Preformed Plastic Pavement Marking Tape for Extended Service Life
ASTM E 28	(1992) Softening Point by Ring-and-Ball Apparatus

FEDERAL SPECIFICATIONS (FS)

FS TT-B-1325	(Rev C) Beads (Glass Spheres) Retro-Reflective (Metric)

1.2 SUBMITTALS

Government approval is required for submittals with a "GA" designation; submittals having an "FIO" designation are for information only. The following shall be submitted in accordance with Section 01300 SUBMITTAL PROCEDURES:

SD-01 Data

Equipment Lists; GA.

Lists of proposed equipment to be used in performance of construction work, including descriptive data, and notifications of proposed Contractor actions as specified in this section.

SD-09 Reports

Material Tests; FIO.

Certified copies of the test reports, prior to the use of the materials at the jobsite. Testing shall be performed in an approved independent laboratory.

SD-13 Certificates

Volatile Organic Compound (VOC) Content; GA.

Certificate stating that the proposed pavement marking paint meets the VOC regulations of the local Air Pollution Control District having jurisdiction over the geographical area in which the project is located.

1.3 DELIVERY AND STORAGE

All materials shall be delivered and stored in sealed containers that plainly show the designated name, formula or specification number, batch number, color, date of manufacture, manufacturer's name, and directions, all of which shall be plainly legible at time of use.

1.4 HAND-OPERATED, PUSH-TYPE MACHINES

All machines, tools, and equipment used in performance of the work shall be approved and maintained in satisfactory operating condition. Hand-operated push-type machines of a type commonly used for application of paint to pavement surfaces shall be acceptable for marking small streets and parking areas. Applicator machine shall be equipped with the necessary paint tanks and spraying nozzles, and shall be capable of applying paint uniformly at coverage specified. Sandblasting equipment shall be provided as required for cleaning surfaces to be painted. Hand-operated spray guns shall be provided for use in areas where push-type machines cannot be used.

PART 2 PRODUCTS

2.1 PAINT

The paint shall be homogeneous, easily stirred to smooth consistency, and shall show no hard settlement or other objectionable characteristics during a storage period of 6 months. Paint shall conform to AASHTO M 248, color as indicated. Pavement marking paints shall comply with applicable state and local laws enacted to ensure compliance with Federal Clean Air Standards. Paint materials shall conform to the restrictions of the local Air Pollution Control District.

2.2 THERMOPLASTIC COMPOUNDS

The thermoplastic reflectorized pavement marking compound shall be extruded or sprayed in a molten state onto a primed pavement surface. Following a surface application of glass beads and upon cooling to normal pavement temperatures, the marking shall be an adherent reflectorized strip of the specified thickness and width that is capable of resisting deformation by traffic.

2.2.1 Composition Requirements

The binder component shall be formulated as a hydrocarbon resin. The pigment, beads and filler shall be uniformly dispersed in the binder resin.

The thermoplastic composition shall be free from all skins, dirt, and foreign objects and shall comply with the following requirements:

	Percent by Weight	
Component	White	Yellow
Binder	17 min.	17 min.
Titanium dioxide	10 min.	-
Glass beads	20 min.	20 min.
Calcium carbonate & inert fillers	49 max.	*
Yellow pigments	-	*

*Amount and type of yellow pigment, calcium carbonate and inert fillers shall be at the option of the manufacturer, providing the other composition requirements of this specification are met.

2.2.2 Physical Properties

2.2.2.1 Color

The color shall be as indicated.

2.2.2.2 Drying Time

When installed at 20 degrees Cand in thicknesses between 3 and 5 mm, the composition shall be completely solid and shall show no damaging effect from traffic after curing 15 minutes.

2.2.2.3 Softening Point

The composition shall have a softening point of not less than 90 degrees C when tested in accordance with ASTM E 28.

2.2.2.4 Specific Gravity

The specific gravity of the composition shall be between 1.9 and 2.2 as determined in accordance with ASTM D 792.

2.2.3 Asphalt Concrete Primer

The primer for asphalt concrete pavements shall be a thermosetting adhesive with a solids content of pigment reinforced synthetic rubber and synthetic plastic resin dissolved and/or dispersed in a volatile organic solvent. The solids content shall not be less than 10 percent by weight at 20 degrees C and 60 percent relative humidity. A wet film thickness of 0.10 mm plus or minus 0.025 mm, shall dry to a tack-free condition in less than 5 minutes.

2.2.4 Portland Cement Concrete Primer

The primer for portland cement concrete pavements shall be an epoxy resin primer. The primer shall be of the type recommended by the manufacturer of

the thermoplastic composition. Epoxy primers recommended by the manufacturer shall be approved by the Contracting Officer prior to use. Requests for approval shall be accompanied with technical data, instructions for use, and a 1 liter sample of the primer material.

2.3 PREFORMED TAPE

The preformed tape shall be an adherent reflectorized strip in accordance with ASTM D 4505 Type I or IV, Class optional.

2.4 REFLECTIVE MEDIA

Reflective media shall conform to FS TT-B-1325, Type I, Gradation A, or AASHTO M 247, Type I.

2.5 SAMPLING AND TESTING

Materials proposed for use shall be stored on the project site in sealed and labeled containers, or segregated at source of supply, sufficiently in advance of needs to allow 60 days for testing. Upon notification by the Contractor that the material is at the site or source of supply, a sample shall be taken by random selection from sealed containers by the Contractor in the presence of a representative of the Contracting Officer. Samples shall be clearly identified by designated name, specification number, batch number, manufacturer's formulation number, project contract number, intended use, and quantity involved. Testing shall be performed in an approved independent laboratory. If materials are approved based on reports furnished by the Contractor, samples will be retained by the Government for possible future testing should the material appear defective during or after application.

PART 3 EXECUTION

3.1 SURFACE PREPARATION

Surfaces to be marked shall be thoroughly cleaned before application of the pavement marking material. Dust, dirt, and other granular surface deposits shall be removed by sweeping, blowing with compressed air, rinsing with water or a combination of these methods as required. Rubber deposits, surface laitance, existing paint markings, and other coatings adhering to the pavement shall be completely removed with scrapers, wire brushes, sandblasting, approved chemicals, or mechanical abrasion as directed. Areas of old pavement affected with oil or grease shall be scrubbed with several applications of trisodium phosphate solution or other approved detergent or degreaser, and rinsed thoroughly after each application. After cleaning, oil-soaked areas shall be sealed with cut shellac to prevent bleeding through the new paint. Pavement surfaces shall be allowed to dry, when water is used for cleaning, prior to striping or marking. Surfaces shall be recleaned, when work has been stopped due to rain.

3.1.1 Cleaning Existing Pavement Markings

In general, markings shall not be placed over existing pavement marking patterns. Existing pavement markings that are in good condition that interfere with or conflict with the newly applied marking patterns shall be removed. Deteriorated or obscured markings that are not misleading or

confusing or interfere with the adhesion of the new marking material do not require removal. New preformed and thermoplastic pavement markings shall not be applied over existing preformed or thermoplastic markings. Whenever grinding, scraping, sandblasting or other operations are performed the work must be conducted in such a manner that the finished pavement surface is not damaged or left in a pattern that is misleading or confusing. When these operations are completed the pavement surface shall be blown off with compressed air to remove residue and debris resulting from the cleaning work.

3.1.2 Cleaning Concrete Curing Compounds

On new portland cement concrete pavements, cleaning operations shall not begin until a minimum of 30 days after the placement of concrete. All new concrete pavements shall be cleaned by either sandblasting or water blasting. When water blasting is performed, thermoplastic and preformed markings shall be applied no sooner than 24 hours after the blasting has been completed. The extent of the blasting work shall be to clean and prepare the concrete surface as follows:

a. There is no visible evidence of curing compound on the peaks of the textured concrete surface.

b. There are no heavy puddled deposits of curing compound in the valleys of the textured concrete surface.

c. All remaining curing compound is intact; all loose and flaking material is removed.

d. The peaks of the textured pavement surface are rounded in profile and free of sharp edges and irregularities.

e. The surface to be marked is dry.

3.2 APPLICATION

All pavement markings and patterns shall be placed as shown on the plans.

3.2.1 Paint

Paint shall be applied to clean, dry surfaces, and only when air and pavement temperatures are above 5 degrees C and less than 35 degrees C. Paint temperature shall be maintained within these same limits. New asphalt pavement surfaces and new portland concrete cement shall be allowed to cure for a period of not less than 30 days before applications of paint. Paint shall be applied pneumatically with approved equipment at rate of coverage specified herein. The Contractor shall provide guide lines and templates as necessary to control paint application. Special precautions shall be taken in marking numbers, letters, and symbols. Edges of markings shall be sharply outlined.

3.2.1.1 Rate of Application

Reflective Markings: Pigmented binder shall be applied evenly to the pavement area to be coated at a rate of 10 plus or minus 0.5 square meter per liter. Glass spheres shall be applied uniformly to the wet paint plus or minus 0.06 kilograms of glass spheres per liter of paint.

Nonreflective Markings: Paint shall be applied evenly to the pavement surface to be coated at a rate of 10 plus or minus 0.5 square meter per liter.

3.2.1.2 Drying

The maximum drying time requirements of the paint specifications will be strictly enforced to prevent undue softening of bitumen, and pickup, displacement, or discoloration by tires of traffic. If there is a delay in drying of the markings, painting operations shall be discontinued until cause of the slow drying is determined and corrected.

3.2.2 Thermoplastic Compounds

Thermoplastic pavement markings shall be placed upon dry pavement; surface dry only shall not be considered an acceptable condition. At the time of installation, the pavement surface temperature shall be a minimum of 5 degrees C and rising. Thermoplastics, as placed, shall be free from dirt or tint.

3.2.2.1 Longitudinal Markings

All centerline, skipline, edgeline, and other longitudinal type markings shall be applied with a mobile applicator. All special markings, crosswalks, stop bars, legends, arrows, and similar patterns shall be placed with a portable applicator, using the extrusion method.

3.2.2.2 Primer

After surface preparation has been completed the asphalt and/or concrete pavement surface shall be primed. The primer shall be applied with spray equipment. Primer materials shall be allowed to "set-up" prior to applying the thermoplastic composition. The asphalt concrete primer shall be allowed to dry to a tack-free condition, usually occurring in less than 10 minutes. The portland cement concrete primer shall be allowed to dry in accordance with the thermoplastic manufacturer's recommendations. To shorten the curing time of the epoxy resins an infrared heating device may be used on the concrete primer.

Asphalt Concrete Primer: Primer shall be applied to all asphalt concrete pavements at a wet film thickness of 0.10 mm, plus or minus 0.025 mm 25 - 40 square meters per liter.

Portland Cement Concrete Primer: Primer shall be applied to all concrete pavements (including concrete bridge decks) at a wet film thickness of between 1.0 to 1.3 mm, 30 - 40 square meters per liter.

3.2.2.3 Markings

After the primer has "set-up" the thermoplastic shall be applied at temperatures no lower than 190 degrees C nor higher than 220 degrees C at the point of deposition. Immediately after installation of the marking, drop-on glass spheres shall be mechanically applied such that the spheres are held by and imbedded in the surface of the molten material.

Extruded Markings: All extruded thermoplastic markings shall be applied at the specified width and at a thickness of not less than 3.0 mm nor more than 5.0 mm.

Sprayed Markings: All sprayed thermoplastic markings shall be applied at the specified width and the thicknesses designated in the contract plans. If the plans do not specify a thickness, centerline markings shall be applied at a wet thickness of 2.0 mm, plus or minus 0.10 mm, and edgeline markings at a wet thickness of 1.5 mm, plus or minus 0.10 mm.

Reflective Glass Spheres: Immediately following application, reflective glass spheres shall be dropped onto the molten thermoplastic marking at the rate of 1 kilogram per 2 square meters of compound.

3.2.3 Preformed Tape

The pavement surface temperature shall be a minimum of 15 degrees C and the ambient temperature shall be a minimum of 15 degrees C and rising. The preformed markings shall be placed in accordance with the manufacturer's written instructions.

3.2.4 Raised Reflective Markers

Prefabricated markers shall be aligned carefully at the required spacing and permanently fixed in place by means of epoxy resin adhesives. To insure good bond, pavement in areas where markers will be set shall be thoroughly cleaned by sandblasting and use of compressed air prior to applying adhesive.

3.2.5 Reflective Media

Application of reflective media shall immediately follow application of pigmented binder. Drop-on application of glass spheres shall be accomplished to insure that reflective media is evenly distributed at the specified rate of coverage. Should there be malfunction of either paint applicator or reflective media dispenser, operations shall be discontinued immediately until deficiency is corrected.

END OF SECTION

SECTION 02592

JOINT SEALING IN CONCRETE PAVEMENTS FOR ROADS AND AIRFIELD

PART 1 - GENERAL

1.1 APPLICABLE PUBLICATIONS

Listed below form a part of this specification to the extent referenced. The publications are referred to in the text by the basic designations only.

FEDERAL SPECIFICATIONS (FED. SPEC.)

SS-S-l40lC	Sealant, Joint, Non-Jet-Fuel-Resistant, Hot-Applied, for Portland Cement and Asphalt Concrete Pavements

U.S. ARMY CORPS OF ENGINEERS HANDBOOK FOR CEMENT AND CONCRETE

CRD-C 525	(1989) Corps of Engineers Test Method for Evaluation of Hot Applied Joint Sealants for Bubbling Due to Heating

1.2 EQUIPMENT

Machines, tools, and equipment used in the performance of the work required by this section will be approved by the Contracting Officer before the work is started and shall be maintained in satisfactory condition.

1.2.1 Joint-Cleaning Equipment

1.2.1.1 Sandblasting Equipment

Sandblasting equipment shall include an air compressor, hose, venturi-type nozzles of sufficient capacity to furnish air at a rate of not less than 150 cfm and to maintain a line pressure of not less than 620 kPa at the nozzle while in use. The compressor shall be equipped with traps that maintain the compressed air free of oil and water.

1.2.1.2 Concrete Saw

A self-propelled power saw shall be provided for cutting joints to the specified widths and depths and for removing filler embedded in the joints or adhering to the joint faces.

1.2.2 Sealing Equipment

1.2.2.1 Hot-Poured Sealant Equipment

Unit applicators used for heating and installing hot-poured sealing materials shall be mobile and shall be equipped with a double-boiler agitator-type kettle with an oil medium in the outer space for heat transfer, a direct-connected pressure-type extruding device with nozzle or nozzles shaped for insertion in the joints to be filled, positive temperature devices for controlling the temperature of oil and sealant, and a recording-type thermometer for indicating the temperature of the sealant.

Applicator unit shall be so designed that the sealant circulates through the delivery hose and returns to the inner kettle when not sealing joints.

1.2.2.2 Cold-Applied Sealant Equipment

Equipment for proportioning, mixing, and installing cold-applied joint sealants shall be designed for delivering two semifluid components to a portable mixer through hoses at a preset ratio of 1 to 1 (by volume) by positive displacement pumps with an accuracy of plus or minus 5 percent for the quantity of each component. Reservoirs for each component shall be equipped with mechanical agitation devices that maintain the components in a uniform condition without entrapping air. Provisions shall be incorporated to permit thermostatically controlled indirect heating of the components when required; however, immediately prior to proportioning and mixing, the temperature of either component shall not exceed 30 degrees C. Screens shall be provided near the top of each reservoir to eliminate foreign particles or partially polymerized material that could clog fluid lines or otherwise cause misproportioning or improper mixing of the two components.

The equipment shall be capable of thoroughly mixing the two components. Before using the equipment in this work, the Contractor shall furnish the supplier's certification that the specific equipment, model and serial number, is recommended for use with the sealing compound to be installed. Initially approved equipment shall be maintained in good working condition, serviced in accordance with the supplier's instructions, and shall not be altered in any way without obtaining prior approval.

1.3 SAMPLING AND TESTING

Joint sealants shall be tested for conformance with the referenced applicable material specification. Contracting Officer shall be notified in writing of the proposed sources of joint sealants at least 60 days prior to the date the materials will be required at the project site. Testing shall have been performed in an approved independent laboratory and certified copies of the test reports shall be submitted and approved. If the use of a primer is recommended for the proposed sealing system, the laboratory test for bond shall be conducted using the primer in accordance with the manufacturer's instructions. Conformance with the requirements of the laboratory tests specified will not constitute final acceptance of the sealing material. Final acceptance will be based on performance of the in-place sealant. The Contractor shall furnish samples of materials, in sufficient quantity to be tested, upon request.

1.4 SUBMITTALS

Government approval is required for submittals with a "GA" designation; submittals having an "FIO" designation are for information only. The following shall be submitted in accordance with Section 01300 SUBMITTAL PROCEDURES:

SD-09 Certifications

Test Reports; GA.

Prior to the use of materials, certified copies of all test reports for each lot of sealant shall be submitted and approved by the Contracting Officer. Where installation procedures or any part thereof are required to

be in accordance with the recommendations of the manufacturer of the materials, printed copies of these recommendations shall be furnished prior to use on the project. Installation of the material shall not be allowed until the recommendations are received.

1.5 DELIVERY AND STORAGE

Materials delivered to the site shall be inspected for damage, unloaded and stored with a minimum of handling. Materials shall be handled in such a manner as to insure no damage to the joint sealant materials. Storage facilities shall be provided by the Contractor at the job site for maintaining materials at temperatures recommended by the manufacturer.

PART 2 - PRODUCTS

2.1 SEALANTS

Sealants shall conform to CRD-C 525 and the following requirements:

2.1.1 Non-Jet Fuel Resistant Sealant

Fed. Spec. SS-S-1401.

2.2 PRIMERS

The use of primers when recommended by the manufacturer of the proposed sealant is authorized in accordance with the manufacturer's instructions.

PART 3 - EXECUTION

3.1 PREPARATION OF JOINTS

Immediately before installation of the sealant, the joints shall be thoroughly cleaned until all laitance, curing compound, filler, and protrusions of hardened concrete are removed from the sides and upper edges of the joint space to be sealed.

3.1.1 Sawing

A power-driven concrete saw shall be used to saw through sawed and filler-type joints to loosen and remove material until the joint groove is clear and open to the full specified width and depth. Loosened material shall be blown from the joint.

3.1.2 Sandblast Cleaning

After sawing, the exposed concrete joint faces and the pavement surfaces extending 12.5 mm from the edges of joints shall be sandblasted until the surfaces are free of dust, dirt, curing compound, filler, and any other material that might prevent bonding of the sealant to the concrete. After cleaning and immediately prior to filling, the joints shall be blown out with compressed air and left completely free of sand and water. The compressed air shall be filtered and free of oil and water.

3.1.3 Separating and Blocking Media

Top portion of the joint shall be sealed with sealant to the depth indicated. When sawed construction or contraction joints are used, the lower portion of the groove shall be plugged or sealed off to prevent entrance of the sealant. The material used to seal off the lower portion of the joint shall be readily compressible, nonshrinkable, nonreactive with the sealant, and nonabsorptive, such as extruded butyl or polychloroprene foam rubber. The blocking medium shall not melt or soften at pouring temperature of the sealant and shall not be stretched during insertion into the joint. Overcutting of the joint shall be done, if necessary to maintain the sealant dimensions, and to accommodate the size of the blocking medium. A tape can be used in lieu of the foam rubber which complies to requirements in the following paragraph.

3.1.4 Installing Tape

Where inserts or filler materials used contain bitumen, a separating medium shall be inserted to prevent contact with cold-applied sealants unless the Contractor certifies compatibility and assumes responsibility of replacing sealants that are not compatible. Separating medium shall be the same as specified above or a nonreactive adhesive-backed tape shall be inserted on the top surface of the insert. Tape shall be at least 2.5 mm wider than the nominal width of the joint, and shall be securely bonded so it will not float up into the new sealant.

3.1.5 Rate of Progress

The stages of joint preparation, which include sandblasting of the joint faces, air pressure cleaning of joints, and placement of separating or blocking media, shall be limited to only that length of joint that can be sealed during the same workday.

3.2 PREPARATION OF SEALANT

3.2.1 Hot-Poured Sealant

Hot-poured sealing materials shall not be heated in excess of the safe heating temperature recommended by the manufacturer as shown on sealant containers. Sealant that has been overheated or subjected to heating for over 3 hours or that has remained in the applicator at the end of the day's operation shall be wasted at the Contractor's expense.

3.2.2 Cold-Applied Sealant

Sealant components and containers shall be inspected prior to use, and materials that contain water, hard caking of any separated constituents, nonreversible jell, or are otherwise unsatisfactory shall be rejected. Settlement of constituents in a soft mass that can be readily and uniformly remixed in the field with simple tools will not be cause for rejection. Prior to transfer of components from the shipping containers to the appropriate reservoirs of the application equipment, the materials in the shipping containers shall be thoroughly mixed to insure homogeneity of the components and incorporation of constituents at the time of transfer. When necessary for remixing prior to transfer to the application equipment reservoirs, components of the sealants shall be warmed to a temperature not exceeding 30 degrees C. by placing the components in heated storage or by other approved methods, but in no case shall the components be heated by direct flame or in single-walled, nonoil-bath heating kettles.

3.3 INSTALLATION OF SEALANTS

3.3.1 Time of Application

Joints shall be sealed immediately following the concrete-curing period or as soon thereafter as weather conditions permit. Concrete walls of the joint shall be surface dry, and the atmospheric and pavement temperatures shall be above 10 degrees C. at the time of application of the sealant. Open joints that cannot be sealed under the conditions specified herein shall be provided with an approved temporary seal to prevent infiltration of foreign particles. Wet joints shall be dried prior to installing sealants.

3.3.2 Sealing Joints

No joint sealant shall be installed until the cleaned joints have been inspected and approved. The joints shall be filled from the bottom up to within 5 mm of the pavement surface using equipment specified in paragraph EQUIPMENT for the type of sealing material to be installed. Excess or spilled sealant shall be removed from the pavement and discarded. Traffic shall not be permitted over newly sealed pavement until authorized by the Contracting Officer. In no case shall sealant be installed using the gravity method and pouring pots. When a primer is supplied by the manufacturer, it shall be applied evenly to the joint faces in accordance with the manufacturer's recommendations. When cold-applied sealant is used, proportioning of the equipment shall be checked at the beginning of each day's operation and every 4 hours, to determine that the preset volume output for each component is being maintained. Material used for these checks may be returned to the proper component reservoir. Joints shall be checked frequently to insure that the newly installed sealant is cured to a tack-free condition within 3 hours.

3.4 INSPECTIONS

3.4.1 Joint Inspection

Joints shall be inspected during cleaning to correct improper equipment and cleaning techniques that damage the concrete. Cleaned joints will be approved prior to installing joint sealant.

3.4.2 Sealing Operations

Application equipment shall be inspected to assure conformance to temperature requirements, proper proportioning and mixing (if two-component type sealant), and installation. Evidences of improper installation shall be cause to suspend operations until causes of deficiencies are determined and corrected.

3.4.3 Sealant Inspection

Sealant shall be inspected for proper rate of cure and set, bonding to concrete surfaces of joint walls, cohesive separation within the sealant, reversion to liquid, and entrapped air and voids. Sealants exhibiting any deficiencies will be rejected. Sealants may be rejected at any time prior to final acceptance of the project. Sealant which is rejected shall be removed from the joint, wasted, and replaced at no additional cost to the Government.

END OF SECTION

SECTION 02660

WATER DISTRIBUTION SYSTEM

PART 1 GENERAL

1.1 REFERENCES

The publications listed below form a part of this specification to the extent referenced. The publications are referred to in the text by basic designation only.

AMERICAN SOCIETY FOR TESTING AND MATERIALS (ASTM)

ASTM A 53	(1993a) Pipe, Steel, Black and Hot-Dipped, Zinc-Coated Welded and Seamless
ASTM B 88	(1993a) Seamless Copper Water Tube
ASTM D 1599	(1988) Short-Time Hydraulic Failure Pressure of Plastic Pipe, Tubing, and Fittings
ASTM D 1784	(1992) Rigid Poly(Vinyl Chloride) (PVC) Compounds and Chlorinated Poly(Vinyl Chloride) (CPVC) Compounds
ASTM D 1785	(1993) Poly(Vinyl Chloride) (PVC) Plastic Pipe, Schedules 40, 80, and 120
ASTM D 2241	(1993) Poly(Vinyl Chloride) (PVC) Pressure-Rated Pipe (SDR Series)
ASTM D 2464	(1993) Threaded Poly(Vinyl Chloride) (PVC) Plastic Pipe Fittings, Schedule 80
ASTM D 2466	(1993) Poly(Vinyl Chloride) (PVC) Plastic Pipe Fittings, Schedule 40
ASTM D 2467	(1993) Socket-Type Poly(Vinyl Chloride) (PVC) Plastic Pipe Fittings, Schedule 80
ASTM D 2564	(1993) Solvent Cements for Poly(Vinyl Chloride) (PVC) Plastic Piping Systems
ASTM D 2657	(1990) Heat-Joining Polyolefin Pipe and Fittings
ASTM D 2774	(1972; R 1983) Underground Installation of Thermoplastic Pressure Piping
ASTM D 2855	(1993) Making Solvent-Cemented Joints with Poly(Vinyl Chloride) (PVC) Pipe and Fittings
ASTM D 2996	(1995) Filament-Wound "Fiberglass" (Glass-Fiber-Reinforced Thermosetting-Resin) Pipe

ASTM D 2997	(1995) Centrifugally Cast "Fiberglass" (Glass-Fiber-Reinforced-Thermosetting-Resin) Pipe
ASTM D 3839	(1994a) Underground Installation of "Fiberglass" (Glass-Fiber-Reinforced Thermosetting Resin) Pipe
ASTM F 477	(1993) Elastomeric Seals (Gaskets) for Joining Plastic Pipe

AMERICAN SOCIETY OF MECHANICAL ENGINEERS (ASME)

ASME B1.20.1	(1983; R 1992) Pipe Threads, General Purpose (Inch)
ASME B16.1	(1989) Cast Iron Pipe Flanges and Flanged Fittings
ASME B16.3	(1992) Malleable Iron Threaded Fittings, Classes 150 and 300
ASME B16.26	(1988) Cast Copper Alloy Fittings for Flared Copper Tubes

AMERICAN WATER WORKS ASSOCIATION (AWWA)

AWWA B300	(1992) Hypochlorites
AWWA B301	(1992) Liquid Chlorine
AWWA C104	(1990) Cement-Mortar Lining for Ductile-Iron Pipe and Fittings for Water
AWWA C110	(1993) Ductile-Iron and Gray-Iron Fittings, 3 In. Through 48 In. (75 mm through 1200 mm), for Water and Other Liquids
AWWA C111	(1990) Rubber-Gasket Joints for Ductile-Iron Pressure Pipe and Fittings
AWWA C115	(1988) Flanged Ductile-Iron Pipe with Threaded Flanges
AWWA C151	(1991) Ductile-Iron Pipe, Centrifugally Cast, for Water or Other Liquids
AWWA C153	(1994) Ductile-Iron Compact Fittings, 3 In. Through 16 In., for Water and Other Liquids
AWWA C203	(1991) Coal-Tar Protective Coatings and Linings for Steel Water Pipelines - Enamel and Tape - Hot-Applied

AWWA C207	(1994) Steel Pipe Flanges for Waterworks Service - Sizes 4 In. Through 144 In.
AWWA C500	(1993) Gate Valves for Water and Sewerage Systems
AWWA C502	(1985) Dry-Barrel Fire Hydrants
AWWA C509	(1994) Resilient-Seated Gate Valves for Water and Sewerage Systems
AWWA C600	(1993) Installation of Ductile-Iron Water Mains and Their Appurtenances
AWWA C606	(1987) Grooved and Shouldered Joints
AWWA C651	(1992) Disinfecting Water Mains
AWWA C700	(1990; C700a) Cold-Water Meters - Displacement Type, Bronze Main Case
AWWA C706	(1991; C706a) Direct-Reading Remote-Registration Systems for Cold-Water Meters
AWWA C707	(1982; R 1992) Encoder-Type Remote-Registration Systems for Cold-Water Meters
AWWA C800	(1989) Underground Service Line Valves and Fittings
AWWA C900	(1989; C900a) Polyvinyl Chloride (PVC) Pressure Pipe, 4 In. Through 12 In., for Water Distribution
AWWA C901	(1988; Errata Apr 1988) Polyethylene (PE) Pressure Pipe and Tubing, 1/2 In. Through 3 In., for Water Service
AWWA C950	(1988) Fiberglass Pressure Pipe
AWWA M23	(1980) Manual: PVC Pipe - Design and Installation

ASBESTOS CEMENT PIPE PRODUCERS ASSOCIATION (ACPPA)

ACPPA-01	(1988) Recommended Work Practices for A/C Pipe

DUCTILE IRON PIPE RESEARCH ASSOCIATION (DIPRA)

DIPRA-01	(1992; Errata May 1993) Thrust Restraint Design for Ductile Iron Pipe

MANUFACTURERS STANDARDIZATION SOCIETY OF THE VALVE AND FITTINGS INDUSTRY (MSS)

MSS SP-80	(1987) Bronze Gate, Globe, Angle and Check Valves

NATIONAL FIRE PROTECTION ASSOCIATION (NFPA)

NFPA 24	(1992) Installation of Private Fire Service Mains and Their Appurtenances
NFPA 49	(1991) Hazardous Chemicals Data
NFPA 325M	(1991) Fire Hazard Properties of Flammable Liquids, Gases, and Volatile Solids
NFPA 704	(1990) Identification of the Fire Hazards of Materials

NSF INTERNATIONAL (NSF)

NSF Std 14	(1965; Rev Nov 1990) Plastics Piping System Components and Related Materials

STEEL STRUCTURES PAINTING COUNCIL (SSPC)

SSPC Paint 21	(1991) White or Colored Silicone Alkyd Paint
SSPC Paint 25	(1991) Red Iron Oxide, Zinc Oxide, Raw Linseed Oil and Alkyd Primer (without Lead and Chromate Pigments)

1.2 PIPING

This section covers water supply, distribution, service lines, and connections to building service at a point approximately 1.5 m outside buildings and structures to which service is required. The Contractor shall have a copy of the manufacturer's recommendations for each material or procedure to be utilized available at the construction site at all times.

1.2.1 Service Lines

Piping for water service lines less than 80 mm in diameter shall be galvanized steel, polyvinyl chloride (PVC) plastic, polyethylene, or copper tubing, unless otherwise shown or specified. Piping for water service lines for sizes 80 mm and larger shall be ductile iron, polyvinyl chloride (PVC) plastic through 300 mm nominal diameter, filament-wound or centrifugally cast reinforced thermosetting resin, reinforced plastic mortar pressure pipe or steel, unless otherwise shown or specified.

1.2.2 Distribution Lines 80 mm or Larger

Piping for water distribution lines 80 mm or larger shall be ductile iron, polyvinyl chloride (PVC) plastic through 300 mm nominal diameter, filament-wound or centrifugally cast reinforced thermosetting resin, reinforced plastic mortar pressure pipe, or reinforced concrete, unless otherwise shown or specified.

1.2.3 Supply Lines 80 mm or Larger

Piping for water supply lines 80 mm or larger shall be ductile iron, polyvinyl chloride (PVC) plastic through 900 mm nominal diameter, filament-wound reinforced or centrifugally cast reinforced thermosetting resin, reinforced plastic mortar pressure pipe, steel, or reinforced concrete, unless otherwise shown or specified.

1.2.4 Sprinkler Supply Lines

Piping for water lines supplying sprinkler systems for building fire protection shall conform to NFPA 24 from the point of connection with the water distribution system to the building 1.5 m line.

1.2.5 Plastic Pipe

All plastic piping system components (PVC, polyethylene, thermosetting resin and reinforced plastic mortar pressure) intended for transportation of potable water shall comply with NSF Std 14 and shall be legibly marked with their symbol.

1.2.6 Excavation, Trenching, and Backfilling

Excavation, trenching, and backfilling shall be in accordance with the applicable provisions of Section 02222 EXCAVATION, TRENCHING, AND BACKFILLING FOR UTILITIES SYSTEMS, except as modified herein.

1.3 MANUFACTURER'S REPRESENTATIVE

The Contractor shall negotiate to have a manufacturer's field representative present at the jobsite during the installation and testing of PE, RTRP, and/or RPMP pipe to provide technical assistance and to verify that the materials are being installed in accordance with the manufacturer's prescribed procedures. When the representative feels that the Contractor is installing and testing the PE, RTRP, and/or RPMP pipe in a satisfactory manner, certification shall be written to note which individuals employed by the Contractor are capable of properly installing the pipe. The field representative shall advise the Contractor of unsatisfactory conditions immediately when they occur. Such conditions include improper diameter of pipe ends, damaged interior liner, poorly prepared joints, improper curing of joints, moving pipe before joints are cured, bending pipe to follow abrupt changes in trench contours, leaving pipe ends open in trench overnight, not properly drying joints after rain storms, exceeding effective adhesive life, sharp objects in trench bed, backfill that could damage pipe, improper procedure for concrete encasement of pipe, omission of thrust blocks at changes in direction or any other conditions which could have an adverse effect on the satisfactory completion and operation of the piping system.

1.4 SUBMITTALS

Government approval is required for submittals with a "GA" designation; submittals having an "FIO" designation are for information only. The following shall be submitted in accordance with Section 01300 SUBMITTAL PROCEDURES:

SD-06 Instructions

Installation; GA.

The manufacturer's recommendations for each material or procedure to be utilized.

SD-08 Statements

Waste Water Disposal Method; GA.

The method proposed for disposal of waste water from hydrostatic tests and disinfection, prior to performing hydrostatic tests.

Satisfactory Installation; GA.

A statement signed by the principal officer of the contracting firm stating that the installation is satisfactory and in accordance with the contract drawings and specifications and the manufacturer's prescribed procedures and techniques, upon completion of the project and before final acceptance.

SD-09 Reports

Bacteriological Disinfection; FIO.

Test results from commercial laboratory verifying disinfection.

SD-13 Certificates

Manufacturer's Representative; FIO.

The name and qualifications of the manufacturer's representative and written certification from the manufacturer that the representative is technically qualified in all phases of PE, RTRP, and/or RPMP pipe laying and jointing and experienced to supervise the work and train the Contractor's field installers, prior to commencing installation.

Installation; GA.

A statement signed by the manufacturer's field representative certifying that the Contractor's personnel are capable of properly installing the pipe on the project.

Meters; GA.

Manufacturer's certificate stating that each meter furnished has been tested for accuracy of registration and compliance with the accuracy and capacity requirements of the appropriate AWWA standard.

1.6 HANDLING

Pipe and accessories shall be handled so as to ensure delivery to the trench in sound, undamaged condition. Particular care shall be taken not to injure the pipe coating or lining. If the coating or lining of any pipe or fitting is damaged, the repair shall be made by the Contractor at his expense in a satisfactory manner. No other pipe or material of any kind shall be placed

inside a pipe or fitting after the coating has been applied. Pipe shall be carried into position and not dragged. Use of pinch bars and tongs for aligning or turning pipe will be permitted only on the bare ends of the pipe. The interior of pipe and accessories shall be thoroughly cleaned of foreign matter before being lowered into the trench and shall be kept clean during laying operations by plugging or other approved method. Before installation, the pipe shall be inspected for defects. Material found to be defective before or after laying shall be replaced with sound material without additional expense to the Government. Rubber gaskets that are not to be installed immediately shall be stored in a cool and dark place.

1.6.1 Coated and Wrapped Steel Pipe

Coated and wrapped steel pipe shall be handled in conformance with AWWA C 203.

1.6.2 Polyethylene (PE) Pipe

PE pipe, fittings, and accessories shall be handled in conformance with AWWA C901.

1.6.3 Miscellaneous Plastic Pipe and Fittings

Polyvinyl Chloride (PVC), Reinforced Thermosetting Resin Pipe (RTRP), and Reinforced Plastic Mortar Pressure (RPMP) pipe and fittings shall be handled and stored in accordance with the manufacturer's recommendations. Storage facilities shall be classified and marked in accordance with NFPA 704, with classification as indicated in NFPA 49 and NFPA 325M.

PART 2 PRODUCTS

2.1 PIPE

Pipe shall conform to the respective specifications and other requirements specified below.

2.1.1 Plastic Pipe

2.1.1.1 Polyethylene Plastic (PE)

Pipe, tubing, and heat-fusion fittings shall conform to AWWA C901.

2.1.1.2 Polyvinyl Chloride (PVC) Plastic Pipe

Pipe, couplings and fittings shall be manufactured of material conforming to ASTM D 1784, Class 12454B.

a. Pipe Less Than 100 mm Diameter:

1. Screw-Joint: Pipe shall conform to dimensional requirements of ASTM D 1785 Schedule 80, with joints meeting requirements of 1.03 MPa working pressure, 1.38 MPa hydrostatic test pressure, unless otherwise shown or specified. Pipe couplings when used, shall be tested as required by ASTM D 2464.

2. Elastomeric-Gasket Joint: Pipe shall conform to dimensional requirements of ASTM D 1785. Schedule 40 with joints meeting the requirements of 1.03 MPa working pressure, 1.38 MPa hydrostatic test pressure, unless otherwise shown or specified, or it may be pipe conforming to requirements of ASTM D 2241, elastomeric joint, with the following applications:

SDR	Maximum Working Pressure MPa	Minimum Hydrostatic Pressure MPa
26	0.689	0.917
21	0.827	1.103
17	1.034	1.379
13.5	1.379	1.833

3. Solvent Cement Joint: Pipe shall conform to dimensional requirements of ASTM D 1785 or ASTM D 2241 with joints meeting the requirements of 1.03 MPa working pressure and 1.38 MPa hydrostatic test pressure.

b. Pipe 100 mm through 300 mm Diameter: Pipe, couplings and fittings shall conform to AWWA C900, Class 150, CIOD pipe dimensions, elastomeric-gasket joint, unless otherwise shown or specified.

2.1.2 Reinforced Plastic Mortar Pressure (RPMP) Pipe

AWWA C950.

2.1.3 Reinforced Thermosetting Resin Pipe (RTRP)

Pipe shall have a quick-burst strength greater than or equal to four times the normal working pressure of the pipe. The quick-burst strength test shall conform to the requirements of ASTM D 1599.

2.1.3.1 RTRP-I

RTRP-I shall conform to ASTM D 2996, except pipe shall have an outside diameter equal to cast iron outside diameter or standard weight steel pipe. The pipe shall be suitable for a normal working pressure of 1.03 MPa at 23 degrees C. The inner surface of the pipe shall have a smooth uniform continuous resin-rich surface liner conforming to ASTM D 2996.

2.1.3.2 RTRP-II

RTRP-II shall conform to ASTM D 2997. Pipe shall have an outside diameter equal to standard weight steel pipe.

2.1.4 Ductile-Iron Pipe

Ductile-iron pipe shall conform to AWWA C151, working pressure not less than 1.03 MPa, unless otherwise shown or specified. Pipe shall be cement-mortar lined in accordance with AWWA C104. Linings shall be standard.

Flanged ductile iron pipe with threaded flanges shall be in accordance with AWWA C115.

2.1.5 Steel Pipe

2.1.5.1 Galvanized-Steel Pipe

Galvanized-steel pipe shall conform to ASTM A 53, standard weight.

2.1.5.2 Protective Materials for Steel Pipe

Protective materials for steel pipe, except as otherwise specified, shall be mechanically applied in a factory or plant especially equipped for the purpose. The materials shall, unless otherwise indicated on the drawings, consist of the following for the indicated pipe material and size:

a. Pipe and fittings less than 80 mm in diameter shall be thoroughly cleaned of foreign material by wire brushing and solvent cleaning, and then given one coat of coal-tar primer and two coats of coal-tar enamel conforming to AWWA C203; threaded ends of pipe and fittings shall be adequately protected prior to coating.

2.1.6 Copper Tubing

Copper tubing shall conform to ASTM B 88, Type K, annealed.

2.2 FITTINGS AND SPECIALS

2.2.1 Polyvinyl Chloride (PVC) Pipe

a. For pipe less than 100 mm diameter, fittings for threaded pipe shall conform to requirements of ASTM D 2464, threaded to conform to the requirements of ASME B1.20.1 for use with Schedule 80 pipe and fittings, fittings for solvent cement jointing shall conform to ASTM D 2466 or ASTM D 2467, and fittings for elastomeric-gasket joint pipe shall be iron conforming to AWWA C110 or AWWA C111. Iron fittings and specials shall be cement-mortar lined (standard thickness) in accordance with AWWA C104.

b. For pipe 100 mm diameter and larger, fittings and specials shall be iron, bell end in accordance with AWWA C110, 1.03 MPa pressure rating unless otherwise shown or specified, except that profile of bell may have special dimensions as required by the pipe manufacturer; or may be fittings and specials of the same material as the pipe with elastomeric gaskets, all in conformance with AWWA C900. Iron fittings and specials shall be cement-mortar lined (standard thickness) in accordance with AWWA C104. Fittings shall be bell and spigot or plain end pipe, or as applicable. Ductile iron compact fittings shall be in accordance with AWWA C153.

2.2.2 RTRP and RPMP Pipe

Fittings and specials shall be compatible with the pipe supplied. Filament wound or molded fittings up to 150 mm shall conform to AWWA C950. Iron fittings shall be cement-mortar lined in accordance with AWWA C104 and

shall conform to AWWA C110 and AWWA C111. Fittings shall be suitable for working and testing pressures specified for the pipe.

2.2.3 Ductile-Iron Pipe

Fittings and special shall be suitable for 1.03 MPa pressure rating, unless otherwise specified. Fittings and specials for mechanical joint pipe shall conform to AWWA C110. Fittings and specials for use with push-on joint pipe shall conform to AWWA C110 and AWWA C111. Fittings and specials for grooved and shouldered end pipe shall conform to AWWA C606. Fittings and specials shall be cement-mortar lined (standard thickness) in accordance with AWWA C104. Ductile iron compact fittings shall conform to AWWA C153.

2.2.4 Steel Pipe

2.2.4.1 Galvanized-Steel Pipe

Steel fittings shall be galvanized. Screwed fittings shall conform to ASME B16.3. Flanged fittings shall conform to AWWA C207.

2.2.4.2 Dielectric Fittings

Dielectric fittings shall be installed between threaded ferrous and nonferrous metallic pipe, fittings and valves, except where corporation stops join mains. Dielectric fittings shall prevent metal-to-metal contact of dissimilar metallic piping elements and shall be suitable for the required working pressure.

2.2.5 Copper Tubing

Fittings and specials shall be flared and conform to ASME B16.26.

2.3 JOINTS

2.3.1 Plastic Pipe

2.3.1.1 Polyethylene (PE) Pipe

Joints for pipe fittings and couplings shall be strong tight joints as specified for PE in Paragraph INSTALLATION. Joints connecting pipe of differing materials shall be made in accordance with the manufacturer's recommendation as approved by the Contracting Officer.

2.3.1.2 Polyvinyl Chloride Pipe

Joints, fittings, and couplings shall be as specified for PVC pipe. Joints connecting pipe of differing materials shall be made in accordance with the manufacturer's recommendations as approved by the Contracting Officer.

2.3.2 RPMP Pipe

Joints shall be mechanical or bell and spigot type with elastomeric gasket.

2.3.3 RTRP

2.3.3.1 RTRP-I, Grade I and 2

Joints shall be bell and spigot with elastomeric gasket, mechanical coupling with elastomeric gasket, threaded and bonded coupling, or tapered bell and spigot with compatible adhesive. All RTRP-I materials shall be products of a single manufacturer.

2.3.3.2 RTRP-II, Grade 1 and 2

Joints shall be the bell and spigot type with elastomeric gasket, bell and spigot with adhesive, butt-jointed with adhesive bonded reinforced overlay, mechanical, flanged, threaded or commercially available proprietary joints, provided they are capable of conveying water at the pressure and temperature of the pipe.

2.3.4 Ductile-Iron Pipe

a. Mechanical joints shall be of the stuffing box type and shall conform to AWWA C111.

b. Push-on joints shall conform to AWWA C111.

c. Rubber gaskets and lubricant shall conform to the applicable requirements of AWWA C111.

2.3.5 Steel Pipe

2.3.5.1 Mechanical Couplings

Mechanical couplings for steel pipe shall be the sleeve type, or when approved, the split-sleeve type and shall provide a tight flexible joint under all reasonable conditions, such as pipe movements caused by expansion, contraction, slight setting or shifting in the ground, minor variations in trench gradients, and traffic vibrations. Couplings shall be of strength not less than the adjoining pipeline.

2.3.6 Isolation Joints

Isolation joints shall be installed between nonthreaded ferrous and nonferrous metallic pipe, fittings and valves. Isolation joints shall consist of a sandwich-type flange isolation gasket of the dielectric type, isolation washers, and isolation sleeves for flange bolts. Isolation gaskets shall be full faced with outside diameter equal to the flange outside diameter. Bolt isolation sleeves shall be full length. Units shall be of a shape to prevent metal-to-metal contact of dissimilar metallic piping elements.

a. Sleeve-type couplings shall be used for joining plain end pipe sections. The two couplings shall consist of one steel middle ring, two steel followers, two gaskets, and the necessary steel bolts and nuts to compress the gaskets.

b. Split-sleeve type couplings may be used in aboveground installations when approved in special situations and shall consist of gaskets and a housing in two or more sections with the necessary bolts and nuts.

2.3.7 Copper Tubing

Joints shall be compression-pattern flared and shall be made with fittings hereinafter specified.

2.4 VALVES

2.4.1 Check Valves

Check valves shall be designed for a minimum working pressure of 1.03 MPa or as indicated. Valves shall have a clear waterway equal to the full nominal diameter of the valve. Valves shall open to permit flow when inlet pressure is greater than the discharge pressure, and shall close tightly to prevent return flow when discharge pressure exceeds inlet pressure. The size of the valve, working pressure, manufacturer's name, initials, or trademark shall be cast on the body of each valve. Valves 50 mm and larger shall be flanged end ANSI B 16.1, Class 125 type.

a. Valves 50 mm and smaller shall be all bronze designed for screwed fittings, and shall conform to MSS SP-80, Class 150, Types 3 and 4 as suitable for the application.

b. Valves larger than 50 mm shall be iron body, bronze mounted, shall have flanged ends, and shall be the non-slam type. Flanges shall be the Class 125 type conforming to ASME B16.1.

2.4.2 Gate Valves

Gate valves shall be designed for a working pressure of not less than 1.03 MPa. Valve connections shall be as required for the piping in which they are installed. Valves shall have a clear waterway equal to the full nominal diameter of the valve, and shall be opened by turning counterclockwise. The operating nut or wheel shall have an arrow, cast in the metal, indicating the direction of opening.

a. Valves smaller than 80 mm shall be all bronze and shall conform to MSS SP-80, Type 1, Class 150.

b. Valves 80 mm and larger shall be iron body, bronze mounted, and shall conform to AWWA C500. Flanges shall not be buried. An approved pit shall be provided for all flanged connections.

c. Resilient-Seated Gate Valves: For valves 80 to 300 mm in size, resilient-seated gate valves shall conform to AWWA C509.

2.4.3 Vacuum and Air Relief Valves

Vacuum and air relief valves shall be of the size shown and shall be of a type that will release air and prevent the formation of a vacuum. The valves shall automatically release air when the lines are being filled with water and shall admit air into the line when water is being withdrawn in excess of the inflow. Valves shall be iron body with bronze trim and stainless steel float.

2.4.4 Indicator Post for Valves

Each valve shown on the drawings with the designation "P.I.V." shall be equipped with indicator post conforming to the requirements of NFPA 24. Operation shall be by a wrench which will be attached to each post.

2.5 VALVE BOXES

Valve boxes shall be cast iron or concrete, except that concrete boxes may be installed only in locations not subjected to vehicular traffic. Cast-iron boxes shall be extension type with slide-type adjustment and with flared base. The minimum thickness of metal shall be 5 mm. Concrete boxes shall be the standard product of a manufacturer of precast concrete equipment. The word "WATER" shall be cast in the cover. The box length shall adapt, without full extension, to the depth of cover required over the pipe at the valve location.

2.6 VALVE PITS

Valve pits shall be constructed at locations indicated or as required above and in accordance with the details shown. Concrete shall have compressive strength of 21 MPa in accordance with Section 03300 CAST-IN-PLACE STRUCTURAL CONCRETE.

2.7 FIRE HYDRANTS

Hydrants shall be dry-barrel type conforming to AWWA C502 with valve opening at least 125 mm in diameter and designed so that the flange at the main valve seat can be removed with the main valve seat apparatus remaining intact, closed and reasonably tight against leakage and with a breakable valve rod coupling and breakable flange connections located no more than 200 mm above the ground grade. Hydrants shall have a 150 mm bell connection, two 65 mm hose connections and one 115 mm pumper connection. Outlets shall have American National Standard fire-hose coupling threads. Working parts shall be bronze. Design, material, and workmanship shall be similar and equal to the latest stock pattern ordinarily produced by the manufacturer. Hydrants shall be painted with one coat of red iron oxide, zinc oxide primer conforming to SSPC Paint 25 and two finish coats of silicone alkyd paint conforming to SSPC Paint 21, color in accordance with NFPA recommendations. Suitable bronze adapter for each outlet, with caps, shall be furnished.

2.8 MISCELLANEOUS ITEMS

2.8.1 Service Clamps

Service clamps shall have a pressure rating not less than that of the pipe to be connected and shall be either the single or double flattened strap type. Clamps shall have a galvanized malleable-iron body with cadmium plated straps and nuts. Clamps shall have a rubber gasket cemented to the body.

2.8.2 Corporation Stops

Corporation stops shall have standard corporation stop thread conforming to AWWA C800 on the inlet end, with flanged joints, compression pattern flared tube couplings, or wiped joints for connections to goosenecks.

2.8.3 Goosenecks

Copper tubing for gooseneck connections shall conform to the applicable requirements of ASTM B 88, Type K, annealed. Length of cable requirement connections shall be in accordance with standard practice.

2.8.4 Service Stops

Service stops shall be water-works inverted-ground-key type, oval or round flow way, tee handle, without drain. Pipe connections shall be suitable for the type of service pipe used. All parts shall be of bronze with female iron-pipe-size connections or compression-pattern flared tube couplings, and shall be designed for a hydrostatic test pressure not less than 1.375 MPa.

2.8.5 Tapping Sleeves

Tapping sleeves of the sizes indicated for connection to existing main shall be the cast gray, ductile, or malleable-iron, split-sleeve type with flanged or grooved outlet, and with bolts, follower rings and gaskets on each end of the sleeve. Construction shall be suitable for a maximum working pressure of 1.72 MPa. Bolts shall have square heads and hexagonal nuts. Longitudinal gaskets and mechanical joints with gaskets shall be as recommended by the manufacturer of the sleeve. When using grooved mechanical tee, it shall consist of an upper housing with full locating collar for rigid positioning which engages a machine-cut hole in pipe, encasing an elastomeric gasket which conforms to the pipe outside diameter around the hole and a lower housing with positioning lugs, secured together during assembly by nuts and bolts as specified, pretorqued to 67.8 Newton meters.

2.8.6 Service Boxes

Service boxes shall be cast iron or concrete and shall be extension service boxes of the length required for the depth of the line, with either screw or slide-type adjustment. The boxes shall have housings of sufficient size to completely cover the service stop or valve and shall be complete with identifying covers.

2.8.7 Disinfection

Chlorinating materials shall conform to the following:

Chlorine, Liquid: AWWA B301.

Hypochlorite, Calcium and Sodium: AWWA B300.

2.8.8 Meters

Meters shall be the type and size shown on the drawings or specified herein. Meters of each of the various types furnished and installed under this contract shall be supplied by one manufacturer.

2.8.8.1 Displacement Type

Displacement type meters shall conform to AWWA C700. Registers shall be straight-reading and shall read in cubic meters. Meters in sizes 13 mm

through 25 mm shall shall not be frost-protection design. Connections shall be suitable to the type of pipe and conditions encountered. Register type shall be a direct-reading remote register designed in accordance with AWWA C706 or an encoder-type remote register designed in accordance with AWWA C707. Meters shall comply with the accuracy and capacity requirements of AWWA C700.

2.8.9 Meter Boxes

Meter boxes shall be of cast iron, concrete, or plastic. The boxes shall be of sufficient size to completely enclose the meter and shut-off valve or service stop. Meter boxes set in paved areas subject to vehicular traffic shall be cast iron, or concrete with cast iron lid and cast iron meter reader lid. Box height shall extend from invert of the meter to final grade at the meter location. The lid shall have the word "WATER" cast in it.

PART 3 EXECUTION

3.1 INSTALLATION

3.1.1 Cutting of Pipe

Cutting of pipe shall be done in a neat and workmanlike manner without damage to the pipe. Unless otherwise recommended by the manufacturer and authorized by the Contracting Officer, cutting shall be done with an approved type mechanical cutter. Wheel cutter shall be used when practicable. Copper tubing shall be cut square and all burrs shall be removed. Squeeze type mechanical cutters shall not be used for ductile iron.

3.1.2 Adjacent Facilities

3.1.2.1 Sewer Lines

Where the location of the water pipe is not clearly defined in dimensions on the drawings, the water pipe shall not be laid closer horizontally than3 m from a sewer except where the bottom of the water pipe will be at least 300 mm above the top of the sewer pipe, in which case the water pipe shall not be laid closer horizontally than 1.8 m from the sewer. Where water lines cross under gravity-flow sewer lines, the sewer pipe for a distance of at least 3 m each side of the crossing shall be fully encased in concrete or shall be made of pressure pipe with no joint located within 900 mm horizontally of the crossing. Water lines shall in all cases cross above sewage force mains or inverted siphons and shall be not less than 600 mm above the sewer main. Joints in the sewer main, closer horizontally than 900 mm to the crossing, shall be encased in concrete.

3.1.2.2 Water Lines

Water lines shall not be laid in the same trench with sewer lines, gas lines, fuel lines, or electric wiring.

3.1.2.3 Copper Tubing

Copper tubing shall not be installed in the same trench with ferrous piping materials.

3.1.2.4 Nonferrous Metallic Pipe

Where nonferrous metallic pipe, e.g. copper tubing, crosses any ferrous piping material, a minimum vertical separation of 300 mm shall be maintained between pipes.

3.1.2.5 Structures

Where water pipe is required to be installed within 1 m of existing structures, the water pipe shall be sleeved as required in Paragraph "Casing Pipe". The Contractor shall take proper precautions during installation of the water pipe and sleeve to ensure that there will be no damage to the structures and no settlement or movement of foundations or footings.

3.1.3 Joint Deflection

3.1.3.1 Flexible Plastic Pipe

Maximum offset in alignment between adjacent pipe joints shall be as recommended by the manufacturer and approved by the Contracting Officer, but in no case shall it exceed 5 degrees.

3.1.3.2 Ductile-Iron Pipe

The maximum allowable deflection shall be as given in AWWA C600. If the alignment requires deflection in excess of the above limitations, special bends or a sufficient number of shorter lengths of pipe shall be furnished to provide angular deflections within the limit set forth.

3.1.3.3 Steel Pipe

For pipe with bell-and-spigot rubber-gasket joints, maximum allowable deflections from a straight line or grade, as required by vertical curves, horizontal curves, or offsets shall be 5 degrees unless a lesser amount is recommended by the manufacturer. Short-radius curves and closures shall be formed by short lengths of pipe or fabricated specials specified.

3.1.4 Placing and Laying

Pipe and accessories shall be carefully lowered into the trench by means of derrick, ropes, belt slings, or other authorized equipment. Under no circumstances shall any of the water-line materials be dropped or dumped into the trench. Care shall be taken to avoid abrasion of the pipe coating. Except where necessary in making connections with other lines or as authorized by the Contracting Officer, pipe shall be laid with the bells facing in the direction of laying. The full length of each section of pipe shall rest solidly upon the pipe bed, with recesses excavated to accommodate bells, couplings, and joints. Pipe that has the grade or joint disturbed after laying shall be taken up and relaid. Pipe shall not be laid in water or when trench conditions are unsuitable for the work. Water shall be kept out of the trench until joints are complete. When work is not in progress, open ends of pipe, fittings, and valves shall be securely closed so that no trench water, earth, or other substance will enter the pipes or fittings. Where any part of the coating or lining is damaged, the repair shall be made by the Contractor at his expense in a satisfactory manner. Pipe ends left

for future connections shall be valved, plugged, or capped, and anchored, as shown.

3.1.4.1 Plastic Pipe Installation

RTRP shall be installed in accordance with ASTM D 3839. RPMP shall be installed in accordance with the recommendations of the manufacturer. PE Pipe shall be installed in accordance with ASTM D 2774. PVC pipe shall be installed in accordance with AWWA M23.

3.1.4.2 Connections

Where connections are made between new work and existing mains, the connections shall be made by using specials and fittings to suit the actual conditions. When made under pressure, these connections shall be installed using standard methods as approved by the Contracting Officer. Connections to existing asbestos-cement pipe shall be made in accordance with ACPPA-01.

3.1.4.3 Penetrations

Pipe passing through walls of valve pits and structures shall be provided with ductile-iron or Schedule 40 steel wall sleeves. Annular space between walls and sleeves shall be filled with rich cement mortar. Annular space between pipe and sleeves shall be filled with mastic.

3.1.4.4 Flanged Pipe

Flanged pipe shall only be installed above ground or with the flanges in valve pits.

3.1.5 Jointing

3.1.5.1 Polyethylene (PE) Pipe

Jointing shall comply with ASTM D 2657, Technique I-Socket Fusion or Technique II-Butt Fusion.

3.1.5.2 Polyvinyl Chloride (PVC) Plastic Pipe

a. Pipe less than 100 mm diameter: Threaded joints shall be made by wrapping the male threads with approved thread tape or applying an approved lubricant, then threading the joining members together. The joint shall be tightened using strap wrenches to prevent damage to the pipe and/or fitting. To avoid excessive torque, joints shall be tightened no more than one thread past hand-tight. Preformed rubber-ring gaskets for elastomeric-gasket joints shall be made in accordance with requirements of ASTM F 477 and as required herein. All pipe ends for push-on joints shall be beveled to facilitate assembly and marked to indicate when the pipe is fully seated. The gasket shall be prelubricated to prevent displacement. The gasket and ring groove in the bell or coupling shall match. The manufacturer of the pipe or fitting shall supply the elastomeric gasket. Couplings shall be provided with stops or centering rings to assure that the coupling is centered on the joint. Solvent cement joints shall use sockets conforming to the requirements of ASTM D 2467. The solvent cement used shall meet the requirements of ASTM D 2564; the joint assembly shall be

made in accordance with ASTM D 2855 and the manufacturer's specific recommendations.

b. Pipe 100 mm through 300 mm diameter: Joints shall be elastomeric-gasket as specified in AWWA C900. Jointing procedure shall be as specified for pipe less than 100 mm diameter with configuration using elastomeric ring gasket.

c. Pipe 350 mm through 900 mm diameter: Joints shall be elastomeric-gasket push-on joints made in accordance with AWWA M23.

3.1.5.3 RTRP I, RTRP II and RPMP Pipe

a. RTRP I: Assembly of the pipe shall be done in strict conformance with the manufacturer's written instruction and installation procedures. Field joints shall be prepared as specified by the pipe manufacturer. Several pipe joints having interference-fit type couplings may be field bonded and cured simultaneously. However, the pipe shall not be moved nor shall additional joints be made until the previously laid joints are completely cured. Joints not having interference-fit type coupling shall be fitted with a clamp which shall hold the joint rigidly in place until the joint cement has completely cured. The clamps shall have a protective material on the inner surface to prevent damage to the plastic pipe when the clamp is tightened in place. The pipe manufacturer shall provide a device or method to determine when the joint is pulled against the pipe stop. Additionally, the pipe manufacturer shall furnish a gauge to measure the diameter of the spigot ends to ensure the diameter conforms to the tolerances specified by the manufacturer. All pipe ends shall be gauged. Factory certified tests shall have been satisfactorily performed to verify that short-term rupture strength is 10.3 MPa or greater when carried out in accordance with ASTM D 1599. All field bonded epoxy-cemented joints, regardless of ambient temperature, shall be cured with a self-regulating thermostatically temperature controlled electrical heating blanket for the time and temperature recommended by the manufacturer for the applicable size and type of joint, or by an alternate heating method recommended by the manufacturer and approved by the Contracting Officer. The joint sections shall not be moved during heating or until the joint has cooled to ambient temperature.

b. RTRP II: A reinforced overlay joint shall be used to join sections together through a placement of layers of reinforcement fiberglass roving, mat, tape or fabric thoroughly saturated with compatible catalyzed resin.

c. Fittings and Specials for RTRP and RPMP Pipe: Metal to RTRP and RPMP pipe connections shall be made by bolting steel flanges to RTRP and RPMP pipe flanges. Cast-iron fitting with gasket bell or mechanical joint may be used with RTRP if pipe has cast iron outside diameter. Steel flanges shall be flat-faced type. Where raised-face steel flanges are used, spacer rings shall be used to provide a flat-face seat for RTRP and RPMP pipe flanges. A full-face Buna "N" gasket 3.2 mm thick with a shore hardness of 50-60 shall be used between all flanged connections. The RTRP and RPMP pipe flange shall have raised sealing rings. Flat washers shall be used under all nuts and bolts on RTRP and RPMP pipe flanges. Bolts and nuts shall be of noncorrosive

steel and torqued to not more than 135 Newton meters. Flanges shall not be buried. A concrete pit shall be provided for all flanged connections.

3.1.5.4 Ductile-Iron Pipe

Mechanical and push-on type joints shall be installed in accordance with AWWA C600 for buried lines or AWWA C606 for grooved and shouldered pipe above ground or in pits.

3.1.5.5 Galvanized-Steel Pipe

Screw joints shall be made tight with a stiff mixture of graphite and oil, inert filler and oil, or with an approved graphite compound, applied with a brush to the male threads only. Compounds shall not contain lead.

3.1.5.6 Copper Tubing

Joints shall be made with flared fittings. The flared end tube shall be pulled tightly against the tapered part of the fitting by a nut which is part of the fitting, so there is metal-to-metal contact.

3.1.5.7 Bonded Joints

Bonded joints shall be installed in accordance with details specified for joints in paragraph JOINTS.

3.1.5.8 Isolation Joints and Dielectric Fittings

Isolation joints and dielectric fittings shall be installed in accordance with details specified in paragraph JOINTS. Dielectric unions shall be encapsulated in a field-poured coal-tar covering, with at least 3 mm thickness of coal tar over all fitting surfaces.

3.1.5.9 Connections

Connections between different types of pipe and accessories shall be made with transition fittings approved by the Contracting Officer.

3.1.6 Service Lines

Service lines shall include the pipeline connecting building piping to water distribution lines to the connections with the building service at a point approximately 1.5 m outside the building where such building service exists. Where building services are not installed, the Contractor shall terminate the service lines approximately 1.5 m from the site of the proposed building at a point designated by the Contracting Officer. Such service lines shall be closed with plugs or caps. All service stops and valves shall be provided with service boxes. Service lines shall be constructed in accordance with the following requirements:

3.1.6.1 Service Lines 50 mm and Smaller

Service lines 50 mm and smaller shall be connected to the main by a directly-tapped corporation stop or by a service clamp. A corporation stop and a copper gooseneck shall be provided with either type of connection.

Maximum sizes for directly-tapped corporation stops and for outlets with service clamps shall be as in TABLE I. Where 2 or more gooseneck connections to the main are required for an individual service, such connections shall be made with standard branch connections. The total clear area of the branches shall be at least equal to the clear area of the service which they are to supply.

TABLE I. SIZE OF CORPORATION STOPS AND OUTLET

Pipe Size (mm)	Corporation Stops (mm) For Ductile-Iron Pipe	Outlets w/Service Clamps (mm) Single & Double Strap
80	--	25
100	25	25
150	32	40
200	40	50
250	40	50
300 & larger	50	50

3.1.6.2 Service Lines 40 mm and Smaller

Service lines 40 mm and smaller shall have a service stop.

3.1.6.3 Service Lines 50 mm in Size

Service lines 50 mm in size shall have a gate valve.

3.1.6.4 Service Lines Larger than 50 mm

Service lines larger than 50 mm shall be connected to the main by a tapped saddle, tapping sleeve and valve, service clamp or reducing tee, depending on the main diameter and the service line diameter, and shall have a gate valve.

3.1.6.5 Service Lines for Sprinkler Supplies

Water service lines used to supply building sprinkler systems for fire protection shall be connected to the water distribution main in accordance with NFPA 24.

3.1.7 Setting of Fire Hydrants, Meters, Valves and Valve Boxes

3.1.7.1 Fire Hydrants

Fire hydrants shall be located and installed as shown. Each hydrant shall be connected to the main with a 150 mm branch line having at least as much cover as the distribution main. Hydrants shall be set plumb with pumper nozzle facing the roadway, with the center of the lowest outlet not less than 450 mm above the finished surrounding grade, and the operating nut not more than 1.2 m above the finished surrounding grade. Fire hydrants

designated on the drawings as low profile shall have the lowest outlet not less than 450 mm above the finished surrounding grade, the top of the hydrant not more than 600 mm above the finished surrounding grade. Except where approved otherwise, the backfill around hydrants shall be thoroughly compacted to the finished gradeline immediately after installation to obtain beneficial use of the hydrant as soon as practicable. The hydrant shall be set upon a slab of concrete not less than 100 mm thick and 375 mm square. Not less than 2 cubic meters of free-draining broken stone or gravel shall be placed around and beneath the waste opening of dry barrel hydrants to ensure drainage.

3.1.7.2 Meters

Meters and meter boxes shall be installed at the locations shown on the drawings. The meters shall be centered in the boxes to allow for reading and ease of removal or maintenance.

3.1.7.3 Valves

After delivery, valves, including those in hydrants, shall be drained to prevent freezing and shall have the interiors cleaned of all foreign matter before installation. Stuffing boxes shall be tightened and hydrants and valves shall be fully opened and fully closed to ensure that all parts are in working condition. Check, pressure reducing, vacuum, and air relief valves shall be installed in valve pits. Valves and valve boxes shall be installed where shown or specified, and shall be set plumb. Valve boxes shall be centered on the valves. Boxes shall be installed over each outside gate valve unless otherwise shown. Where feasible, valves shall be located outside the area of roads and streets. Earth fill shall be carefully tamped around each valve box or pit to a distance of 1.2 m on all sides of the box, or the undisturbed trench face if less than 1.2 m.

3.1.7.4 Service Boxes

Service boxes shall be installed in accessible locations, beyond the limits of street surfacing, walks and driveways.

3.1.8 Tapped Tees and Crosses

Tapped tees and crosses for future connections shall be installed where shown.

3.1.9 Thrust Restraint

Plugs, caps, tees and bends deflecting 11-1/4 degrees or more, either vertically or horizontally, on waterlines 100 mm (4 inches) in diameter or larger, and fire hydrants shall be provided with thrust restraints. Valves shall be securely anchored or shall be provided with thrust restraints to prevent movement. Thrust restraints shall be either thrust blocks or, for ductile-iron pipes, restrained joints.

3.1.9.1 Thrust Blocks

Thrust blocking shall be concrete of a mix not leaner than: 1 cement, 2-1/2 sand, 5 gravel; and having a compressive strength of not less than 14 MPa after 28 days. Blocking shall be placed between solid ground and the hydrant or fitting to be anchored. Unless otherwise indicated or directed,

the base and thrust bearing sides of thrust blocks shall be poured directly against undisturbed earth. The sides of thrust blocks not subject to thrust may be poured against forms. The area of bearing shall be as shown or as directed. Blocking shall be placed so that the fitting joints will be accessible for repair. Steel rods and clamps, protected by galvanizing or by coating with bituminous paint, shall be used to anchor vertical down bends into gravity thrust blocks.

3.1.9.2 Restrained Joints

For ductile-iron pipe, restrained joints shall be designed by the Contractor or the pipe manufacturer in accordance with DIPRA-01.

3.2 HYDROSTATIC TESTS

Where any section of a water line is provided with concrete thrust blocking for fitting or hydrants, the hydrostatic tests shall not be made until at least 5 days after installation of the concrete thrust blocking, unless otherwise approved.

3.2.1 Pressure Test

After the pipe is laid, the joints completed, fire hydrants permanently installed, and the trench partially backfilled leaving the joints exposed for examination, the newly laid piping or any valved section of piping shall, unless otherwise specified, be subjected for 1 hour to a hydrostatic pressure test of 1.38 MPa. Water supply lines designated on the drawings shall be subjected for 1 hour to a hydrostatic pressure test of 1.38 MPa. Each valve shall be opened and closed several times during the test. Exposed pipe, joints, fittings, hydrants, and valves shall be carefully examined during the partially open trench test. Joints showing visible leakage shall be replaced or remade as necessary. Cracked or defective pipe, joints, fittings, hydrants and valves, discovered in consequence of this pressure test shall be removed and replaced with sound material, and the test shall be repeated until the test results are satisfactory. The requirement for the joints to remain exposed for the hydrostatic tests may be waived by the Contracting Officer when one or more of the following conditions is encountered:

a. Wet or unstable soil conditions in the trench.

b. Compliance would require maintaining barricades and walkways around and across an open trench in a heavily used area that would require continuous surveillance to assure safe conditions.

c. Maintaining the trench in an open condition would delay completion of the contract.

The Contractor may request a waiver, setting forth in writing the reasons for the request and stating the alternative procedure proposed to comply with the required hydrostatic tests. Backfill placed prior to the tests shall be placed in accordance with the requirements of Section 02222 EXCAVATION, TRENCHING, AND BACKFILLING FOR UTILITIES SYSTEMS.

3.2.2 Leakage Test

Leakage test shall be conducted after the pressure tests have been satisfactorily completed. The duration of each leakage test shall be at least 2 hours, and during the test the water line shall be subjected to not less than 1.38 MPa pressure. Water supply lines designated on the drawings shall be subjected to a pressure equal to 1.38 MPa. Leakage is defined as the quantity of water to be supplied into the newly laid pipe, or any valved or approved section thereof, necessary to maintain pressure within 34.5 kPa of the specified leakage test pressure after the pipe has been filled with water and the air expelled. No piping installation will be accepted if leakage exceeds the allowable leakage which is determined by the following formula:

L = 0.0001351ND(P raised to 1/2 power)

L = Allowable leakage in gallons per hour
N = Number of joints in the length of pipeline tested
D = Nominal diameter of the pipe in inches
P = Average test pressure during the leakage test, in psi gauge

Should any test of pipe disclose leakage greater than that calculated by the above formula, the defective joints shall be located and repaired until the leakage is within the specified allowance, without additional cost to the Government.

3.2.3 Time for Making Test

Except for joint material setting or where concrete thrust blocks necessitate a 5-day delay, pipelines jointed with rubber gaskets, mechanical or push-on joints, or couplings may be subjected to hydrostatic pressure, inspected, and tested for leakage at any time after partial completion of backfill. Cement-mortar lined pipe may be filled with water as recommended by the manufacturer before being subjected to the pressure test and subsequent leakage test.

3.2.4 Concurrent Hydrostatic Tests

The Contractor may elect to conduct the hydrostatic tests using either or both of the following procedures. Regardless of the sequence of tests employed, the results of pressure tests, leakage tests, and disinfection shall be satisfactory as specified. All replacement, repair or retesting required shall be accomplished by the Contractor at no additional cost to the Government.

a. Pressure test and leakage test may be conducted concurrently.

b. Hydrostatic tests and disinfection may be conducted concurrently, using the water treated for disinfection to accomplish the hydrostatic tests. If water is lost when treated for disinfection and air is admitted to the unit being tested, or if any repair procedure results in contamination of the unit, disinfection shall be reaccomplished.

3.3 DISINFECTION

3.3.1 Bacteriological Disinfection

Before acceptance of potable water operation, each unit of completed waterline shall be disinfected as prescribed by AWWA C651 and as specified herein. After pressure tests have been made, the unit to be disinfected shall be thoroughly flushed with water until all entrained dirt and mud have been removed before introducing the chlorinating material. The chlorinating material shall be either liquid chlorine, calcium hypochlorite, or sodium hypochlorite, conforming to paragraph MISCELLANEOUS ITEMS. The chlorinating material shall provide a dosage of not less than 50 ppm and shall be introduced into the water lines in an approved manner. Polyvinyl Chloride (PVC) pipe lines shall be chlorinated using only the above specified chlorinating material in solution. In no case will the agent be introduced into the line in a dry solid state. The treated water shall be retained in the pipe long enough to destroy all non-spore-forming bacteria. Except where a shorter period is approved, the retention time shall be at least 24 hours and shall produce not less than 25 ppm of free chlorine residual throughout the line at the end of the retention period. All valves on the lines being disinfected shall be opened and closed several times during the contact period. The line shall then be flushed with clean water until the residual chlorine is reduced to less than 1.0 ppm. During the flushing period, each fire hydrant on the line shall be opened and closed several times. From several points in the unit, the Contracting Officer will take samples of water in proper sterilized containers for bacterial examination. Personnel from the Contractor's commercial laboratory shall take at least 3 water samples from different points, approved by the Contracting Officer, in proper sterilized containers and perform a bacterial examination in accordance with state approved methods. The commercial laboratory must be certified by the state's approving authority for examination of potable water. The disinfection shall be repeated until tests indicate the absence of pollution for at least 2 full days. The unit will not be accepted until satisfactory bacteriological results have been obtained.

3.3.2 Lead Residual

Following the bacteriological disinfection and testing, the system shall be flushed with a sufficient velocity of water and sufficient tests performed at each hot- and cold-water discharge point until no more than 15 ppb lead residuals remain in the system. All tests and samples shall be performed in accordance with state and, if applicable, Federal regulations. Samples for testing are to be collected after a 6-hour continuous period of no flushing, and will be considered first draw samples. The commercial laboratory must be certified by the state's approving authority for examination of potable water. Lead residual test results are to be submitted to the Contracting Officer. The system will not be accepted until satisfactory bacteriological results and lead residual test results have been obtained. All flushing and testing for lead residuals, including all costs, are the responsibility of the Contractor.

3.4 CLEANUP

Upon completion of the installation of water lines, and appurtenances, all debris and surplus materials resulting from the work shall be removed.

END OF SECTION

SECTION 02720

STORM-DRAINAGE SYSTEM

PART 1 GENERAL

1.2 REFERENCES

The publications listed below form a part of this specification to the extent referenced. The publications are referred to in the text by basic designation only.

AMERICAN ASSOCIATION OF STATE HIGHWAY AND TRANSPORTATION OFFICIALS (AASHTO)

AASHTO M 33	(1981) Preformed Expansion Joint Filler for Concrete (Bituminous Type)
AASHTO M 64	(1984) Ductile Iron Culvert Pipe
AASHTO M 86	(1987I) Concrete Sewer, Storm Drain, and Culvert Pipe
AASHTO M 91	(1978; Rev. 1986) Sewer and Manhole Brick (Made from Clay or Shale)
AASHTO M 105	(1985) Gray Iron Castings
AASHTO M 114	(1985) Building Brick (Solid Masonry Units Made from Clay or Shale)
AASHTO M 170	(1987I) Reinforced Concrete Culvert, Storm Drain, and Sewer Pipe
AASHTO M 198	(1975; Rev. 1986) Joints for Circular Concrete Sewer and Culvert Pipe Using Flexible Watertight Gaskets
AASHTO M 199	(1987I) Precast Reinforced Concrete Manhole Sections
AASHTO M 252	(1985) Corrugated Polyethylene Drainage Tubing
AASHTO M 294	(1986) Corrugated Polyethylene Pipe, 12 to 24-In. Diameter

AMERICAN SOCIETY FOR TESTING AND MATERIALS (ASTM)

ASTM A 48	(1983) Gray Iron Castings
ASTM A 123	(1984) Zinc (Hot-Dip Galvanized) Coatings on Iron and Steel Products
ASTM A 536	(1984) Ductile Iron Castings
ASTM A 716	(1986) Ductile Iron Culvert Pipe

ASTM C 14	(1982) Concrete Sewer, Storm Drain, and Culvert Pipe
ASTM C 32	(1973; R 1984) Sewer and Manhole Brick (Made from Clay or Shale)
ASTM C 55	(1985) Concrete Building Brick
ASTM C 62	(1987) Building Brick (Solid Masonry Units Made from Clay or Shale)
ASTM C 76	(1985; Rev. A) Reinforced Concrete Culvert, Storm Drain, and Sewer Pipe
ASTM C 139	(1973; R 1985) Concrete Masonry Units for Construction of Catch Basins and Manholes
ASTM C 231	(1982) Air Content of Freshly Mixed Concrete by the Pressure Method
ASTM C 270	(1987; Rev. A) Mortar for Unit Masonry
ASTM C 425	(1986) Compression Joints for Vitrified Clay Pipe and Fittings
ASTM C 443	(1985; Rev. A) Joints for Circular Concrete Sewer and Culvert Pipe, Using Rubber Gaskets
ASTM C 478	(1987) Precast Reinforced Concrete Manhole Sections
ASTM D 1556	(1982) Density of Soil In-Place by the Sand Cone Method
ASTM D 1557	(1978) Moisture-Density Relations of Soils and Soil-Aggregate Mixtures Using 10-Lb. (4.54 kg) Rammer and 18-In. (457-mm) Drop
ASTM D 1751	(1983) Preformed Expansion Joint Filler for Concrete Paving and Structural Construction (Nonextruding and Resilient Bituminous Types)
ASTM D 1752	(1984) Preformed Sponge Rubber and Cork Expansion Joint Fillers for Concrete Paving and Structural Construction
ASTM D 2167	(1984) Density and Unit Weight of Soil In-Place by the Rubber-Balloon Method
ASTM D 2321	(1983; Rev. A) Underground Installation of Flexible Thermoplastic Sewer Pipe
ASTM D 3034	(1985; Rev. B) Type PSM Polyvinyl Chloride (PVC) Sewer Pipe and Fittings

ASTM D 3212 (1986) Joints for Drain and Sewer Plastic Pipes Using Flexible Elastomeric Seals

1.2 SUBMITTALS

Government approval is required for submittals with a "GA" designation; submittals having an "FIO" designation are for information only. The following shall be submitted in accordance with Section 01300 SUBMITTAL PROCEDURES:

SD-06 Istructions

Installation Procedures; FIO.

Where installation procedures or any part thereof are required to be in accordance with the recommendations of the manufacturer of the material being installed, printed copies of these recommendations shall be furnished to the Contracting Officer prior to installation.

SD-13 Certificates

Certificates of Compliance; FIO.

Certified copies of test reports demonstrating conformance to applicable pipe specifications shall be delivered to the Contracting Officer before pipe is installed.

SD-14 Samples

Samples; FIO.

Samples of the following materials shall be submitted to the Contracting Officer and approved before work is started: pipe.

1.3 DELIVERY, STORAGE, AND HANDLING

1.3.1 Delivery and Storage

Materials delivered to site shall be inspected for damage, unloaded, and stored with a minimum of handling. Materials shall not be stored directly on the ground. The inside of pipes and fittings shall be kept free of dirt and debris. Gasket materials and plastic materials shall be protected from exposure to the direct sunlight over extended periods.

1.3.2 Handling

Materials shall be handled in such a manner as to insure delivery to the trench in sound, undamaged condition. Pipe shall be carried to the trench, not dragged.

PART 2 PRODUCTS

2.1 PIPE FOR CULVERTS AND STORM DRAINS

Pipe for culverts and storm drains shall be of the sizes indicated and shall conform to the requirements for the following pertinent types:

2.1.1 Reinforced Concrete Pipe

ASTM C 76 or AASHTO M 170, Class II.

2.1.2 Nonreinforced Concrete Pipe

ASTM C 14 or AASHTO M 86, Class 2.

2.1.3 Polyvinyl Chloride (PVC) Pipe

ASTM D 3034, Type PSM, SDR-35.

2.1.4 Corrugated Polyethylene (PE) Pipe

AASHTO M 252 or AASHTO M 294.

2.1.5 Ductile Iron Culvert Pipe

AASHTO M 64 or ASTM A 716.

2.2 DRAINAGE STRUCTURES

2.2.1 Manholes and Inlets

Construction shall be of reinforced concrete, plain concrete, brick, precast reinforced concrete, precast concrete segmental blocks, prefabricated corrugated metal, or bituminous coated corrugated metal, complete with frames and covers or gratings and with fixed galvanized steel ladders where indicated. Pipe studs and junction chambers of prefabricated corrugated metal manholes shall be fully bituminous-coated and paved when the connecting branch lines are so treated.

2.3 MATERIALS FOR DRAINAGE STRUCTURES

2.3.1 Concrete

Unless otherwise specified, concrete and reinforced concrete shall conform to the requirements for 21 MPa psi concrete under Section 03300 CONCRETE FOR BUILDING CONSTRUCTION. The concrete mixture shall have air content by volume of concrete, based on measurements made immediately after discharge from the mixer, of 5 to 7 percent when maximum size of coarse aggregate exceeds 38 mm. Air content shall be determined in accordance with ASTM C 231. The concrete covering over steel reinforcing shall not be less than 25 mm thick for covers and not less than 38 mm thick for walls and flooring. Concrete covering deposited directly against the ground shall have a thickness of at 75 mm between steel and ground. Expansion-joint filler material shall conform to ASTM D 1751, ASTM D 1752, or AASHTO M 33, or shall be resin-impregnated fiberboard conforming to the physical requirements of ASTM D 1752.

2.3.2 Mortar

Mortar for pipe joints, connections to other drainage structures, and brick or block construction shall conform to ASTM C 270, Type M, except the maximum placement time shall be 1 hour. The quantity of water in the mixture shall be sufficient to produce a stiff workable mortar but in no case shall exceed 30 liters of water per sack of cement. Water shall be

clean and free of harmful acids, alkalies, and organic impurities. The mortar shall be used within 30 minutes after the ingredients are mixed with water. The inside of the joint shall be wiped clean and finished smooth. The mortar head on the outside shall be protected from air and sun with a proper covering until satisfactorily cured.

2.3.3 Precast Concrete Segmental Blocks

Precast concrete segmental block shall conform to ASTM C 139, not more than 200 mm thick, not less than 200 mm long, and of such shape that joints can be sealed effectively and bonded with cement mortar.

2.3.4 Brick

Brick shall conform to ASTM C 62 or AASHTO M 114, Grade SW; ASTM C 55, Grade S-I or S-II; or ASTM C 32 or AASHTO M 91, Grade MS. Mortar for jointing and plastering shall consist of one part portland cement and two parts fine sand. Lime may be added to the mortar in a quantity not more than 25 percent of the volume of cement. The joints shall be filled completely and shall be smooth and free from surplus mortar on the inside of the structure. Brick structures shall be plastered with 13 mm of mortar over the entire outside surface of the walls. For square or rectangular structures, brick shall be laid in stretcher courses with a header course every sixth course. For round structures, brick shall be laid radially with every sixth course a stretcher course.

2.3.5 Precast Reinforced Concrete Manholes

Precast reinforced concrete manholes shall conform to ASTM C 478 or AASHTO M 199. Joints between precast concrete risers and tops shall be full-bedded in cement mortar and shall be smoothed to a uniform surface on both interior and exterior of the structure.

2.3.6 Frame and Cover or Gratings

Frame and cover or gratings shall be cast gray iron, ASTM A 48 or AASHTO M 105, Class 35B; cast ductile iron, ASTM A 536, Grade 65-45-12. Reinforced concrete shall conform to the requirements of Section 03300 CONCRETE FOR BUILDING CONSTRUCTION. Weight, shape, size, and waterway openings for grates and curb inlets shall be as indicated on the plans. Proof load test, test bars, and certification shall be provided for any component which must support a structural live load.

2.4 STEEL LADDERS

Steel ladders shall be provided where the depth of the manhole 3.6 meters. These ladders will be not less than 400 mm in width with 19 mm diameter rungs spaced 300 mm apart. Ladders shall be adequately anchored to the wall by means of steel inserts spaced not more than 1.8 meters apart vertically and shall be so installed as to provide at least 163 mm of space between wall and inside of rungs. The ladders and inserts shall be galvanized after fabrication in conformance with ASTM A 123. The wall along the line of the ladder shall be vertical for its entire length.

2.5 DOWNSPOUT BOOTS

Boots used to connect exterior downspouts to the storm-drainage system shall be of gray cast iron conforming to ASTM A 48 or AASHTO M 105, Class 30B or 35B. Shape and size shall be as indicated.

2.6 JOINTS

2.6.1 For Concrete Pipe

2.6.1.1 Cement-Mortar Bell-and-Spigot Joint

The first pipe shall be bedded to the established gradeline, with the bell end placed upstream. The interior surface of the bell shall be carefully cleaned with a wet brush and the lower portion of the bell filled with mortar to such depth as to bring inner surfaces of abutting pipes flush and even. The spigot end of each subsequent pipe shall be cleaned with a wet brush and uniformly matched into a bell so that sections are closely fitted. After each section is laid, the remainder of the joint shall be filled with mortar, and a bead shall be formed around the outside of the joint with sufficient additional mortar. Cement mortar, finish, and protection of joints shall be as specified in paragraph "MATERIALS FOR DRAINAGE STRUCTURES." If mortar is not sufficiently stiff to prevent appreciable slump before setting, the outside of the joint shall be wrapped or bandaged with cheesecloth to hold mortar in place.

2.6.1.2 Cement-Mortar Tongue-and-Groove Joint

The first pipe shall be bedded carefully to the established gradeline with the groove upstream. A shallow excavation shall be made underneath the pipe at the joint and filled with mortar to provide a bed for the pipe. The grooved end of the first pipe shall be carefully cleaned with a wet brush, and a layer of soft mortar applied to the lower half of the groove. The tongue of the second pipe shall be cleaned carefully with a wet brush; while in horizontal position, a layer of soft mortar shall be applied to the upper half of the tongue. The tongue end of the second pipe then shall be inserted in the grooved end of the first pipe until mortar is squeezed out on interior and exterior surfaces. Sufficient mortar shall be used to fill the joint completely and to form a bead on the outside. The cement mortar, finish, and protection of joints shall be as specified in paragraph "MATERIALS FOR DRAINAGE STRUCTURES."

2.6.1.3 Flexible Watertight Joints

a. Materials: Flexible watertight joints shall be made with plastic or rubber-type gaskets for concrete pipe and with factory-fabricated resilient materials for clay pipe. The design of joints and the physical requirements for plastic gaskets shall conform to AASHTO M 198, and rubber-type gaskets shall conform to ASTM C 443 or AASHTO M 198. Factory-fabricated resilient joint materials shall conform to ASTM C 425. Gaskets shall have not more than one factory-fabricated splice, except that two factory-fabricated splices of the rubber-type gasket are permitted if the nominal diameter of the pipe being gasketed exceeds 1.35 meters.

b. Installation: Gaskets and jointing materials shall be as recommended by the particular manufacturer in regard to use of lubricants, cements, adhesives, and other special installation requirements. Surfaces to receive lubricants, cements, or adhesives shall be clean and dry.

Gaskets and jointing materials shall be affixed to the pipe not more than 24 hours prior to the installation of the pipe, and shall be protected from the sun, blowing dust, and other deleterious agents at all times. Gaskets and jointing materials shall be inspected before installing the pipe; any loose or improperly affixed gaskets and jointing materials shall be removed and replaced. The pipe shall be aligned with the previously installed pipe, and the joint pushed home. If, while the joint is being made the gasket becomes visibly dislocated the pipe shall be removed and the joint remade.

2.6.2 For Polyvinyl Chloride (PVC) Pipe

Joints shall be in accordance with the requirements of ASTM D 3212.

2.6.3 For Corrugated Polyethylene (PE) Pipe

Use couplings and fittings recommended by the pipe manufacturer.

2.6.4 For Ductile Iron Pipe

Use couplings and fittings recommended by the pipe manufacturer.

PART 3 EXECUTION

3.1 EXCAVATION FOR PIPE CULVERTS, STORM DRAINS, AND DRAINAGE STRUCTURES

Excavation of trenches and for appurtenances and backfilling for culverts and storm drains shall be in accordance with the applicable portions of Section 02221, EXCAVATION, TRENCHING, AND BACKFILLING FOR UTILITIES SYSTEMS, and the following requirements:

3.1.1 Trenching

The width of trenches at any point below the top of the pipe shall be not greater than the outside diameter (O.D.) of the pipe plus 600 mm for pipes of less than 600 mm inside diameter, and shall not exceed 600 mm plus pipe O.D. for larger sizes to permit satisfactory jointing and thorough tamping of the bedding material under and around the pipe. Sheeting and bracing where required shall be placed within the trench width as specified. Care shall be taken not to overexcavate. Where trench widths are exceeded, redesign with a resultant increase in cost of stronger pipe or special installation procedures shall be necessary. Cost of this redesign and increased cost of pipe or installation shall be borne by the Contractor without additional cost to the Government.

3.1.2 Removal of Rock

Rock in either ledge or boulder formation shall be replaced with suitable materials to provide a compacted earth cushion having a thickness between unremoved rock and the pipe of at least 200 mm or 13 mm for each 300 mm of fill over the top of the pipe, whichever is greater, but not more than three-fourths the nominal diameter of the pipe. Where bell-and-spigot pipe is used, the cushion shall be maintained under the bell as well as under the straight portion of the pipe. Rock excavation shall be as specified and defined in Section 02221 EXCAVATION, TRENCHING, AND BACKFILLING FOR UTILITIES SYSTEMS.

3.1.3 Removal of Unstable Material

Where wet or otherwise unstable soil incapable of properly supporting the pipe, as determined by the Contracting Officer, is unexpectedly encountered in the bottom of a trench, such material shall be removed to the depth required and replaced to the proper grade with select granular material specified in Section: EXCAVATION, TRENCHING, AND BACKFILLING FOR UTILITIES SYSTEMS, and compacted as provided in paragraph "BACKFILLING." When removal of unstable material is due to the fault or neglect of the Contractor in his performance of shoring and sheeting, water removal, or other specified requirements, resulting material shall be excavated and replaced.

3.2 BEDDING

The bedding surface for the pipe shall provide a firm foundation of uniform density throughout the entire length of the pipe. When no bedding class is specified or detailed on the drawings, concrete pipe shall be bedded carefully in a soil foundation accurately shaped and rounded to conform to the lowest one-fourth of the outside portion of circular pipe or to the lower curved portion of pipe arch for the entire length of the pipe or pipe arch. When necessary, the bedding shall be tamped. Bell holes and depressions for joints shall be only of such length, depth, and width as required for properly making the particular type of joint. Bedding for PVC pipe shall meet the requirements of ASTM D 2321. Bedding for ductile iron culvert pipe shall meet requirements of AASHTO M 64.

3.3 PLACING PIPE

Each pipe shall be carefully examined before being laid, and defective or damaged pipe shall not be used. Pipelines shall be laid to the grades and alignment indicated. Proper facilities shall be provided for lowering sections of pipe into trenches. Lifting lugs in vertically elongated metal pipe shall be placed in the same vertical plane as the major axis of the pipe. Under no circumstances shall pipe be laid in water, and no pipe shall be laid when trench conditions or weather are unsuitable for such work. Diversion of drainage or dewatering of trenches during construction shall be provided as necessary. All pipe in place shall be inspected before backfilling, and those pipes damaged during placement shall be removed and replaced.

3.3.1 Concrete, PVC, and Ductile Iron Pipe

Laying shall proceed upgrade with spigot ends of bell-and-spigot pipe and tongue ends of tongue-and-groove pipe pointing in the direction of the flow.

3.4 BACKFILLING

3.4.1 Backfilling Pipe in Trenches

After the pipe has been properly bedded, selected material from excavation or borrow, bedded, selected material from excavation or borrow, at a moisture content that will facilitate compaction, shall be placed along both sides of pipe in layers not exceeding 50 mm in compacted depth. The backfill shall be brought up evenly on both sides of pipe for the full length of pipe. Care shall be taken to insure thorough compaction of the fill under the haunches of the pipe. Each layer shall be thoroughly compacted with mechanical tampers or rammers. This method of filling and

compacting shall continue until the fill has reached an elevation of at least 300 mm above the top of the pipe. The remainder of the trench shall be backfilled and compacted by spreading and rolling or compacted by mechanical rammers or tampers in layers not exceeding 150 mm close thickness for compaction by hand operated machine compactors, and 200 mm loose thickness for other than hand operated machines. Tests for density will be made as necessary to insure conformance to the compaction requirements specified elsewhere in this paragraph. Where it is necessary in the opinion of the Contracting Officer, any sheeting or portions of bracing used shall be left in place and the contract will be adjusted accordingly. Untreated sheeting shall not be left in place beneath structures or pavements.

3.4.2 Backfilling Pipe in Fill Sections

For pipe placed in fill sections, backfill material and the placement and compaction procedures shall be as specified elsewhere in this paragraph. The fill material shall be uniformly spread in layers longitudinally on both sides of the pipe, not exceeding 150 mm in compacted depth, and shall be compacted by rolling parallel with pipe or by mechanical tamping or ramming. Prior to commencing normal filling operations, the crown width of the fill at a height of 300 mm above the top of the pipe shall extend a distance of not less than twice the outside pipe diameter on each side of the pipe or 3.6 meters, whichever is less. After the backfill has reached at least 300 mm above the top of the pipe, the remainder of the fill shall be placed and thoroughly compacted in layers not exceeding 150 mm close thickness for compaction by hand operated machine compactors, and 200 mm loose thickness for other than hand operated machines.

3.4.3 Movement of Construction Machinery

In compacting by rolling or operating heavy equipment parallel with the pipe, displacement of or injury to the pipe shall be avoided. Movement of construction machinery over a culvert or storm drain at any stage of construction shall be at the Contractor's risk. Any pipe damaged thereby shall be repaired or replaced.

3.4.4 Compaction

3.4.4.1 General

Cohesionless materials include gravels, gravel-sand mixtures, sands, and gravelly sands. Cohesive materials include clayey and silty gravels, gravel-silt mixtures, clayey and silty sands, sand-clay mixtures, clays, silts, and very fine sands. When results of compaction tests for moisture-density relations are recorded on graphs, cohesionless soils will show straight lines or reverse-shaped moisture-density curves, and cohesive soils will show normal moisture-density curves.

3.4.4.2 Minimum Density

Backfill over and around the pipe and backfill around and adjacent to drainage structures shall be compacted at the approved moisture content to the following applicable minimum density (densities) which will be determined as specified in this paragraph.

Under streets, parking areas, and similar-use pavements including adjacent shoulder areas, the density shall be not less than 90 percent of maximum

density for cohesive material and 95 percent of maximum density for cohesionless material, up to the elevation where requirements for pavement subgrade materials and compaction shall control.

Under nontraffic areas, density shall be not less than that of the surrounding material.

3.4.5 Determination of Density

Testing shall be the responsibility of the Contractor and performed at no additional cost to the Government. Testing shall be performed by an approved commercial testing laboratory or by the Contractor subject to approval. Tests shall be performed in sufficient number to insure that specified density is being obtained. Minimum number of tests shall be in accordance with Section 01400, Contractor Quality Control. Laboratory tests for moisture-density relations shall be made in accordance with ASTM D 1557, Method D, except that mechanical tampers may be used provided the results are correlated with those obtained with the specified hand tamper. Field density tests shall be determined in accordance with ASTM D 2167 or ASTM D 1556. Test results shall be furnished the Contracting Officer.

END OF SECTION

SECTION 02730

SANITARY SEWERS

PART 1 GENERAL

1.1 REFERENCES

The publications listed below form a part of this specification to the extent referenced. The publications are referred to in the text by basic designation only.

AMERICAN SOCIETY FOR TESTING AND MATERIALS (ASTM)

ASTM A 123	(1989a) Zinc (Hot-Dip Galvanized) Coatings on Iron and Steel Products
ASTM C 94	(1995) Ready-Mixed Concrete
ASTM C 150	(1995) Portland Cement
ASTM C 270	(1995a) Mortar for Unit Masonry
ASTM C 443	(1994) Joints for Circular Concrete Sewer and Culvert Pipe, Using Rubber Gaskets
ASTM C 478	(1994) Precast Reinforced Concrete Manhole Sections
ASTM C 478M	(1994) Precast Reinforced Concrete Manhole Sections (Metric)
ASTM C 828	(1990) Low-Pressure Air Test of Vitrified Clay Pipe Lines
ASTM C 924	(1989) Concrete Pipe Sewer Lines by Low-Pressure Air Test Method
ASTM C 972	(1982; R 1990) Test Method for Compression-Recovery of Tape Sealant
ASTM D 412	(1992) Vulcanized Rubber and Thermoplastic Rubbers and Thermoplastic Elastomers - Tension
ASTM D 624	(1991) Tear Strength of Conventional Vulcanized Rubber and Thermoplastic Elastomers
ASTM D 1784	(1992) Rigid Poly(Vinyl Chloride) (PVC) Compounds and Chlorinated Poly(Vinyl Chloride) (CPVC) Compounds

ASTM D 2680	(1995) Acrylonitrile-Butadiene-Styrene (ABS) and Poly(Vinyl Chloride) (PVC) Composite Sewer Piping
ASTM D 2751	(1993) Acrylonitrile-Butadiene-Styrene (ABS) Sewer Pipe and Fittings
ASTM D 3034	(1994) Type PSM Poly(Vinyl Chloride) (PVC) Sewer Pipe and Fittings
ASTM D 3212	(1992) Joints for Drain and Sewer Plastic Pipes Using Flexible Elastomeric Seals
ASTM D 3350	(1993) Polyethylene Plastics Pipe and Fittings Materials
ASTM F 402	(1993) Safe Handling of Solvent Cements, Primers, and Cleaners Used for Joining Thermoplastic Pipe and Fittings
ASTM F 714	(1994) Polyethylene (PE) Plastic pipe (SDR-PR) Based on Outside Diameter
ASTM F 794	(1995a) Poly(Vinyl Chloride) (PVC) Profile Gravity Sewer Pipe and Fittings Based on Controlled Inside Diameter
ASTM F 894	(1995) Polyethylene (PE) Large Diameter Profile Wall Sewer and Drain Pipe
ASTM F 949	(1993a) Poly(Vinyl Chloride) (PVC) Corrugated Sewer Pipe with a Smooth Interior and Fittings

NATIONAL FIRE PROTECTION ASSOCIATION (NFPA)

NFPA 49	(1994) Hazardous Chemicals Data
NFPA 325M	(1991) Fire Hazard Properties of Flammable Liquids, Gases, and Volatile Solids
NFPA 704	(1990) Identification of the Fire Hazards of Materials

UNI-BELL PVC PIPE ASSOCIATION (UBPPA)

UBPPA UNI-B-6	(1990) Recommended Practice for the Low-Pressure Air Testing of Installed Sewer Pipe
UBPPA UNI-B-9	(1990; Addenda 1994) Recommended Performance Specification for Polyvinyl Chloride (PVC) Profile Wall Gravity Sewer Pipe and Fittings Based on Controlled Inside Diameter (Nominal Pipe Sizes 4-48 inch)

1.2 GENERAL REQUIREMENTS

The construction required herein shall include appurtenant structures and building sewers to points of connection with the building drains 1.5 m outside the building to which the sewer system is to be connected. The Contractor shall replace damaged material and redo unacceptable work at no additional cost to the Government. Excavation and backfilling is specified in Section 02222 EXCAVATION, TRENCHING, AND BACKFILLING FOR UTILITIES SYSTEMS. Backfilling shall be accomplished after inspection by the Contracting Officer. Before, during, and after installation, plastic pipe and fittings shall be protected from any environment that would result in damage or deterioration to the material. The Contractor shall have a copy of the manufacturer's instructions available at the construction site at all times and shall follow these instructions unless directed otherwise by the Contracting Officer. Solvents, solvent compounds, lubricants, elastomeric gaskets, and any similar materials required to install the plastic pipe shall be stored in accordance with the manufacturer's recommendation and shall be discarded if the storage period exceeds the recommended shelf life. Solvents in use shall be discarded when the recommended pot life is exceeded.

1.3 SUBMITTALS

Government approval is required for submittals with a "GA" designation; submittals having an "FIO" designation are for information only. The following shall be submitted in accordance with Section 01300 SUBMITTAL PROCEDURES:

SD-13 Certificates

Portland Cement; FIO.

Certificates of compliance stating the type of cement used in manufacture of concrete pipe, fittings and precast manholes.

PART 2 PRODUCTS

2.1 PIPE

Pipe shall conform to the respective specifications and other requirements specified below.

2.1.1 Plastic Pipe

Acrylonitrile-butadiene-styrene (ABS) and polyvinyl chloride (PVC) composite sewer piping shall conform to ASTM D 2680. Size 200 mm through 380 mm diameter.

2.1.1.1 ABS Pipe

ASTM D 2751.

2.1.1.2 PVC Pipe

ASTM D 3034, Type PSM with a maximum SDR of 35, Size 380 mm or less in diameter. ASTM F 949 for corrugated sewer pipes with a smooth interior.

UBPPA UNI-B-9 and ASTM F 794, Series 46, for ribbed sewer pipe with smooth interior, size 200 mm through 1200 mm diameters. PVC shall be certified by the compounder as meeting the requirements ofASTM D 1784, cell Class 12454B. The pipe stiffness shall be greater than or equal to 735/D for cohesionless material pipe trench backfills.

2.1.1.3 High Density Polyethylene Pipe

ASTM F 894, Class 63, size 450 mm through3000 mm. ASTM F 714, size 100 mm through 1200 mm. The polyethylene shall be certified by the resin producer as meeting the requirements of ASTM D 3350, cell Class 334433C. The pipe stiffness shall be greater than or equal to 1170/D for cohesionless material pipe trench backfills.

2.2 FITTINGS

Fittings shall be compatible with the pipe supplied and shall have a strength not less than that of the pipe. Fittings shall conform to the respective specifications and other requirements specified below.

2.2.1 Plastic Pipe

ABS and PVC composite sewer pipe fittings shall conform to ASTM D 2680.

2.2.1.1 ABS Pipe

ASTM D 2751.

2.2.1.2 PVC Pipe

ASTM D 3034 for type PSM pipe. ASTM F 949 for corrugated sewer pipe with a smooth interior. UBPPA UNI-B-9 and ASTM F 794, Series 46, for ribbed sewer pipe with smooth interior.

2.2.1.3 High Density Polyethylene Pipe

ASTM F 894.

2.3 JOINTS

Joints installation shall comply with the manufacturer's instructions. Fittings and gaskets utilized for waste drains or industrial waste lines shall be certified by the manufacturer as oil-resistant.

2.3.1 Plastic Pipe

Flexible plastic pipe (PVC or high density polyethylene pipe) gasketed joints shall conform to ASTM D 3212.

2.3.1.1 ABS Pipe

ASTM D 2751, solvent weld or bell and spigot O-ring joint, size 300 mm (12 inches) or less in diameter, dimensions and tolerances in accordance with Table 2 therein.

2.3.1.2 High Density Polyethylene Pipe

Rubber gasket joints shall conform to ASTM C 443.

2.4 BRANCH CONNECTIONS

Branch connections shall be made by use of regular fittings or solvent cemented saddles as approved. Saddles for ABS and PVC composite pipe shall conform to Figure 2 of ASTM D 2680; saddles for ABS pipe shall comply with Table 3 of ASTM D 2751; and saddles for PVC pipe shall conform to Table 4 of ASTM D 3034.

2.5 FRAMES AND COVERS

Frames and covers shall be cast iron, ductile iron or reinforced concrete. Cast iron frames and covers shall be as indicated or shall be of type as suitable for the application, circular, without vent holes. The frames and covers shall have a combined weight of not less than 181.4 kg. Reinforced concrete frames and covers shall be as indicated or shall conform to ASTM C 478 or ASTM C 478M. The word "Sewer" shall be stamped or cast into covers so that it is plainly visible.

2.6 STEEL LADDER

A steel ladder shall be provided where the depth of a manhole exceeds 3.6 m. The ladder shall not be less than 406.4 mm in width, with 19.1 mm diameter rungs spaced 304.8 mm apart. The two stringers shall be a minimum 9.5 mm thick and 50.8 mm wide. Ladders and inserts shall be galvanized after fabrication in conformance with ASTM A 123.

2.7 CEMENT MORTAR

Cement mortar shall conform to ASTM C 270, Type M with Type II cement.

2.7.1 Portland Cement

Portland cement shall conform to ASTM C 150, Type II for concrete used in concrete pipe, concrete pipe fittings, and manholes and type optional with the Contractor for cement used in concrete cradle, concrete encasement, and thrust blocking.

2.7.2 Portland Cement Concrete

Portland cement concrete shall conform to ASTM C 94, compressive strength of 28 MPa at 28 days, except for concrete cradle and encasement or concrete blocks for manholes. Concrete used for cradle and encasement shall have a compressive strength of 17 MPa minimum at 28 days. Concrete in place shall be protected from freezing and moisture loss for 7 days.

2.8 STRUCTURES

2.8.1 Precast Reinforced Concrete Manhole Sections

Precast reinforced concrete manhole sections shall conform to ASTM C 478, except that portland cement shall be as specified herein. Joints shall be

cement mortar, an approved mastic, rubber gaskets, a combination of these types; or the use of external preformed rubber joint seals and extruded rolls of rubber with mastic adhesive on one side.

PART 3 EXECUTION

3.1 INSTALLATION

3.1.1 Adjacent Facilities

3.1.1.1 Water Lines

Where the location of the sewer is not clearly defined by dimensions on the drawings, the sewer shall not be closer horizontally than 3 m to a water-supply main or service line, except that where the bottom of the water pipe will be at least 300 mm above the top of the sewer pipe, the horizontal spacing may be a minimum of 2 m. Where gravity-flow sewers cross above water lines, the sewer pipe for a distance of 3 m on each side of the crossing shall be fully encased in concrete or shall be acceptable pressure pipe with no joint closer horizontally than 1 m to the crossing. The thickness of the concrete encasement including that at the pipe joints shall be not less than 100 mm.

3.1.1.2 Structures

Where sewer pipe is to be installed within 1 m of an existing or proposed building or structural foundation such as a retaining wall or any similar structure, the sewer pipe shall be sleeved as specified above. Care shall be exercised and proper precautions taken during installation of the sewer pipe and sleeve to assure that there will be no damage to such structures and no settlement or movement of foundations or footing.

3.1.2 Pipe Laying

a. Pipe shall be protected during handling against impact shocks and free fall and the pipe interior shall be free of extraneous material.

b. Pipe laying shall proceed upgrade with the spigot ends of bell-and-spigot pipe and tongue ends of tongue-and-groove pipe pointing in the direction of the flow. Each pipe shall be laid accurately to the line and grade shown on the drawings. Pipe shall be laid and centered so that the sewer has a uniform invert. As the work progresses, the interior of the sewer shall be cleared of all superfluous materials.

c. Before making pipe joints all surfaces of the portions of the pipe to be joined shall be clean and dry. Lubricants, primers, and adhesives shall be used as recommended by the pipe manufacturer. The joints shall then be placed, fitted, joined, and adjusted to obtain the degree of water tightness required.

d. ABS composite pipe ends with exposed truss and filler material shall be coated with solvent weld material before making the joint to prevent water or air passage at the joint between the inner and outer wall of the pipe.

e. Installations of solvent weld joint pipe, using ABS or PVC pipe and fittings shall be in accordance with ASTM F 402. All required precautions shall be taken to assure adequate trench ventilation and protection for workers installing the pipe.

3.1.2.1 Caulked Joints

The packing material shall be well packed into the annular space to prevent the entrance of lead into the pipe. The remainder of the space shall be filled with molten lead that is hot enough to show a rapid change in color when stirred. Scum shall be removed before pouring. The lead shall be caulked to form a tight joint without overstraining the bell and shall have a minimum depth of 25 mm after caulking.

3.1.2.2 Trenches

Trenches shall be kept free of water and as dry as possible during bedding, laying, and jointing and for as long a period as required. When work is not in progress, open ends of pipe and fittings shall be satisfactorily closed so that no trench water or other material will enter the pipe or fittings.

3.1.2.3 Backfill

As soon as possible after the joint is made, sufficient backfill material shall be placed along the pipe to prevent pipe movement off line or grade. Plastic pipe shall be completely covered to prevent damage from ultraviolet light.

3.1.2.4 Width of Trench

If the maximum width of the trench at the top of the pipe, as specified in Section 02222 EXCAVATION, TRENCHING, AND BACKFILLING FOR UTILITIES SYSTEMS, is exceeded for any reason other than by direction, the Contractor shall install at no additional cost to the Government such concrete cradling, pipe encasement, or other bedding required to support the added load of the backfill.

3.1.2.5 Joints

Joints between different pipe materials shall be made as specified, using approved jointing materials.

3.1.2.6 Handling and Storage

Pipe, fittings and joint material shall be handled and stored in accordance with the manufacturer's recommendations. Storage facilities for plastic pipe, fittings, joint materials and solvents shall be classified and marked in accordance with NFPA 704, with classification as indicated in NFPA 49 and NFPA 325M.

3.1.3 Leakage Tests

Lines shall be tested for leakage by low pressure air testing, infiltration tests or exfiltration tests, as appropriate. Low pressure air testing for vitrified clay pipes shall be as prescribed in ASTM C 828. Low pressure air testing for concrete pipes shall be as prescribed in ASTM C 828. Low

pressure air testing for PVC pipe shall be as prescribed in UBPPA UNI-B-6. Low pressure air testing procedures for other pipe materials shall use the pressures and testing times prescribed in ASTM C 828 and ASTM C 924, after consultation with the pipe manufacturer. Prior to infiltration or exfiltration tests the trench shall be backfilled up to at least the lower half of the pipe. If required, sufficient additional backfill shall be placed to prevent pipe movement during testing, leaving the joints uncovered to permit inspection. Visible leaks encountered shall be corrected regardless of leakage test results. When the water table is 600 mm or more above the top of the pipe at the upper end of the pipeline section to be tested, infiltration shall be measured using a suitable weir or other device acceptable to the Contracting Officer. When the Contracting Officer determines that infiltration cannot be properly tested, an exfiltration test shall be made by filling the line to be tested with water so that a head of at least 600 mm is provided above both the water table and the top of the pipe at the upper end of the pipeline to be tested. The filled line shall be allowed to stand until the pipe has reached its maximum absorption, but not less than 4 hours. After absorption, the head shall be re-established. The amount of water required to maintain this water level during a 2-hour test period shall be measured. Leakage as measured by either the infiltration test or exfiltration test shall not exceed 600 liters per 10 mm diameter per kilometer per day. When leakage exceeds the maximum amount specified, satisfactory correction shall be made and retesting accomplished. Testing, correction, and retesting shall be made at no additional cost to the Government.

3.1.4 Test for Deflection

When flexible pipe is used, a deflection test shall be made on the entire length of the installed pipeline not less than 30 days after the completion of all work including the leakage test, backfill, and placement of any fill, grading, paving, concrete, or superimposed loads. Deflection shall be determined by use of a deflection device or by use of a spherical, spheroidal, or elliptical ball, a cylinder, or circular sections fused to a common shaft. The ball, cylinder, or circular sections shall have a diameter, or minor diameter as applicable, of 92.5 percent of the inside diameter of the pipe, but 95 percent for RPMP and RTRP. A tolerance of plus 0.5 percent will be permitted. The ball, cylinder, or circular sections shall be of a homogeneous material throughout, shall have a density greater than 1.0 as related to water at 4.0 degrees C and shall have a surface brinell hardness of not less than 150. It shall be center bored and through bolted with a 6.4 mm minimum diameter steel shaft having a yield strength of 480 MPa or more, with eyes at each end for attaching pulling cables. The eye shall be suitably backed with flange or heavy washer such that a pull exerted on the opposite end of the shaft shall produce compression throughout the remote end of the ball, cylinder or circular section. Circular sections shall be so spaced that the distance from the external faces of the front and back sections shall equal or exceed the diameter of the circular section. Failure of the ball, cylinder, or circular section to pass freely through a pipe run, either by being pulled through or by being flushed through with water, shall be cause for rejection of that run. When a deflection device is used for the test in lieu of the ball, cylinder, or circular sections described, such device shall be approved prior to use. The device shall be sensitive to 1.0 percent of the diameter of the pipe being measured and shall be accurate to 1.0 percent of the indicated dimension. Installed pipe showing deflections greater than 7.5 percent of

the normal diameter of the pipe, or 5 percent for RTRP and RPMP, shall be retested by a run from the opposite direction. If the retest also fails, the suspect pipe shall be replaced at no cost to the Government.

3.2 WYE BRANCHES

Wye branches shall be installed where sewer connections are indicated or where directed. Cutting into piping for connections shall not be done except in special approved cases. When the connecting pipe cannot be adequately supported on undisturbed earth or tamped backfill, the pipe shall be encased in concrete backfill or supported on a concrete cradle as directed. Concrete required because of conditions resulting from faulty construction methods or negligence by the Contractor shall be installed at no additional cost to the Government. The installation of wye branches in an existing sewer shall be made by a method which does not damage the integrity of the existing sewer. One acceptable method consists of removing one pipe section, breaking off the upper half of the bell of the next lower section and half of the running bell of wye section. After placing the new section, it shall be rotated so that the broken half of the bell will be at the bottom. The two joints shall then be made with joint packing and cement mortar.

3.3 MANHOLES

3.3.1 General

Manholes shall be constructed of glass-fiber-reinforced polyester, prefabricated plastic, concrete, or precast concrete manhole sections. The invert channels shall be smooth and semicircular in shape conforming to the inside of the adjacent sewer section. Changes in direction of flow shall be made with a smooth curve of as large a radius as the size of the manhole will permit. Changes in size and grade of the channels shall be made gradually and evenly. The invert channels shall be formed directly in the concrete of the manhole base, or shall be built up with brick and mortar, or shall be half tile laid in concrete, or shall be constructed by laying full section sewer pipe through the manhole and breaking out the top half after the surrounding concrete has hardened. Pipe connections shall be made to manhole using water stops, standard O-ring joints, special manhole coupling, or shall be made in accordance with the manufacturer's recommendation. The Contractor's proposed method of connection, list of materials selected, and specials required, shall be approved prior to installation. The floor of the manhole outside the channels shall be smooth and shall slope toward the channels not less than 100 mm per meter nor more than 200 mm per meter. Free drop inside the manholes shall not exceed 500 mm, measured from the invert of the inlet pipe to the top of the floor of the manhole outside the channels, and drop manholes shall be constructed whenever the free drop would otherwise be greater than 500 mm.

3.3.2 Steel Ladder

Ladder shall be adequately anchored to the wall by means of steel inserts spaced not more than 1850 mm apart vertically, and shall be installed to provide at least 150 mm of space between the wall and the rungs. The wall along the line of the ladder shall be vertical for its entire length.

3.3.3 Jointing, Plastering and Sealing

Mortar joints shall be completely filled and shall be smooth and free from surplus mortar on the inside of the manhole. Mortar and mastic joints between precast rings shall be full-bedded in jointing compound and shall be smoothed to a uniform surface on both the interior and exterior of the manhole. Installation of rubber gasket joints between precast rings shall be in accordance with the recommendations of the manufacturer. Precast rings may also be sealed by the use of extruded rolls of rubber with mastic adhesive on one side.

3.3.4 Frames and Covers

Unless otherwise indicated, tops of frames and covers shall be set flush with finished grade in paved areas or 50 mm higher than finished grade in unpaved areas. Frame and cover assemblies shall be sealed to manhole sections using external preformed rubber joint seals that meet the requirements of ASTM D 412 and ASTM D 624, or other methods specified in paragraph Jointing, Plastering and Sealing, unless otherwise specified.

3.3.5 External Preformed Rubber Joint Seals

External preformed rubber joint seals and extruded rolls of rubber with mastic adhesive shall meet the requirements of ASTM D 412 and ASTM C 972 to ensure conformance with paragraph Leakage Tests. The seal shall be multi-section with neoprene rubber top section and all lower sections made of Ethylene Propylene Di Monomer (EPDM) rubber with a minimum thickness of 1.5 mm. Each unit shall consist of a top and a bottom section and shall have mastic on the bottom of the bottom section and mastic on the top and bottom of the top section. The mastic shall be non-hardening butyl rubber sealant and shall seal to the cone/top slab of the manhole/catch basin and over the lip of the casting. One unit shall seal a casting and up to six, 50 mm adjusting rings. The bottom section will be 305 mm in height. A 152 mm high top section will cover up to two, 50 mm adjusting rings. A 305 mm high bottom section will cover up to six, 50 mm adjusting rings. Extension sections shall cover up to two more adjusting rings. Each extension shall overlap the bottom section by 50 mm and shall be overlapped by the top section by 50 mm.

3.4 CONNECTIONS TO EXISTING MANHOLES

Pipe connections to existing manholes shall be made in such manner that the finish work will conform as nearly as practicable to the essential applicable requirements specified for new manholes, including all necessary concrete work, cutting, and shaping. The connection shall be centered on the manhole. Holes for the new pipe shall be of sufficient diameter to allow packing cement mortar around the entire periphery of the pipe but no larger than 1-1/2 times the diameter of the pipe. Cutting the manhole shall be done in a manner that will cause the least damage to the walls.

3.5 BUILDING CONNECTIONS

Building connections shall include the lines to and connection with the building waste drainage piping at a point approximately 1.5 m outside the building, unless otherwise indicated. Where building drain piping is not installed, the Contractor shall terminate the building connections approximately 1.5 m from the site of the building at a point and in a manner designated.

3.6 CLEANOUTS AND OTHER APPURTENANCES

Cleanouts and other appurtenances shall be installed where shown on the drawings or as directed by the Contracting Officer, and shall conform to the detail of the drawings.

END OF SECTION

SECTION 02831

CHAIN LINK FENCE

PART 1 GENERAL

1.1 REFERENCES

The publications listed below form a part of this specification to the extent referenced. The publications are referred to in the text by basic designation only

AMERICAN SOCIETY FOR TESTING AND MATERIALS (ASTM)

ASTM A 121	(1992a) Zinc-Coated (Galvanized) Steel Barbed Wire
ASTM A 153	(1996) Zinc-Coated (Hot Dip) on Iron and Steel Hardware
ASTM A 176	(1994) Stainless and Heat-Resisting Chromium Steel Plate, Sheet, and Strip
ASTM A 392	(1996) Zinc-Coated SteelChain-Link Fence Fabric
ASTM A 478	(1995a) Chromium-Nickel Stainless and Heat-Resisting Steel Weaving and Knitting Wire
ASTM A 491	(1996) Aluminum-Coated Steel Chain-Link Fence Fabric
ASTM A 585	(1992) Aluminum-Coated Steel Barbed Wire
ASTM A 780	(1993a) Repair of Damaged and Uncoated Areas of Hot-Dipped Galvanized Coatings
ASTM A 824	(1992) Metallic-Coated Steel Marcelled Tension Wire for Use With Chain Link Fence
ASTM C 94	(1996) Ready-Mixed Concrete
ASTM F 626	(1996) Fence Fittings
ASTM F 883	(1990) Padlocks
ASTM F 900	(1994) Industrial and Commercial Swing Gates
ASTM F 1043	(1995) Strength and Protective Coatings on Metal Industrial Chain-Link Fence Framework
ASTM F 1083	(1996) Specification for Pipe, Steel, Hot-Dipped Zinc-Coated (Galvanized) Welded, for Fence Structures

ASTM F 1184 (1994) Industrial and Commercial Horizontal Slide Gates

1.2 SUBMITTALS

Government approval is required for submittals with a "GA" designation; submittals having an "FIO" designation are for information only. The following shall be submitted in accordance with Section 01300 SUBMITTAL PROCEDURES:

SD-13 Certificates

Chain Link Fence; GA

Statement signed by an official authorized to certify on behalf of the manufacturer attesting that the chain link fence and component materials meet the specified requirements

SD-19 Operation and Maintenance Manuals

PART 2 PRODUCTS

2.1 MATERIALS

Materials shall conform to the following

2.1.1 Chain Link Fence Fabric

ASTM A 392, Class 1, zinc-coated steel wire with minimum coating weight of 370 grams of zinc per square meter of coated surface, or ASTM A 491. Fabric shall be fabricated of 9 gauge wire woven in 50.8 mm mesh. Fabric height shall be 2 meters as shown. Fabric shall be twisted and barbed on the top selvage and knuckled on the bottom selvage.

2.1.2 Gates

ASTM F 900 and/or ASTM F 1184. Gate shall be the type and swing shown. Gate frames shall conform to strength and coating requirements of ASTM F 1083 for Group IA, steel pipe, with external coating Type A, nominal pipe size (NPS) 1-1/2. Gate frames shall conform to strength and coating requirements of ASTM F 1043, for Group IC, steel pipe with external coating Type A or Type B, nominal pipe size (NPS) 1-1/2. Gate fabric shall be as specified for chain-link fabric. Each end member of gate frames shall be extended sufficiently above the top member to carry three strands of barbed wire in horizontal alignment with barbed wire strands on the fence. Gate leaves more than 2.44 m wide shall have either intermediate members and diagonal truss rods or shall have tubular members as necessary to provide rigid construction, free from sag or twist. Gate leaves less than 2.44 m wide shall have truss rods or intermediate braces. Intermediate braces shall be provided on all gate frames with an electro-mechanical lock. Gate fabric shall be attached to the gate frame by method standard with the manufacturer except that welding will not be permitted. Latches, hinges, stops, keepers, rollers, and other hardware items shall be furnished as required for the operation of the gate. Latches shall be arranged for padlocking so that the padlock will be accessible from both sides of the gate. Stops shall be provided for holding the gates in the open position.

2.1.3 Posts

ASTM F 1083, zinc-coated. Group IA, with external coating Type A steel pipe. Group IC steel pipe, zinc-coated with external coating Type A or Type B and Group II, formed steel sections, shall meet the strength and coating requirements of ASTM F 1043. Group III, ASTM F 1043 steel H-section may be used for line posts in lieu of line post shapes specified for the other classes. Sizes shall be as shown on the drawings. Line posts and terminal (corner, gate, and pull) posts selected shall be of the same designation throughout the fence. Gate post shall be for the gate type specified subject to the limitation specified in ASTM F 900 and/or ASTM F 1184

2.1.4 Braces and Rails

ASTM F 1083, zinc-coated, Group IA, steel pipe, size NPS 1-1/4. Group IC steel pipe, zinc-coated, shall meet the strength and coating requirements of ASTM F 1043. Group II , formed steel sections, size 42.16 mm conforming to ASTM F 1043, may be used as braces and rails if Group II line posts are furnished.

2.1.5 Tension Wire

Tension wire shall be Type I or Type II, Class 2 coating, in accordance with ASTM A 824.

2.1.6 Accessories

ASTM F 626. Ferrous accessories shall be zinc or aluminum coated. Truss rods shall be furnished for each terminal post. Truss rods shall be provided with turnbuckles or other equivalent provisions for adjustment. Barbed wire shall be 2 strand, 12-1/2 gauge wire, zinc-coated, Class 3 in accordance with ASTM A 121 or aluminum coated Type I in accordance with ASTM A 585. Barbed wire shall be four-point barbed type steel wire. Barbed wire support arms shall be the single V arm type and of the design required for the post furnished. Tie wire for attaching fabric to rails, braces, and posts shall be 9 gauge steel wire and match the coating of the fence fabric. Miscellaneous hardware coatings shall conform to ASTM A 153 unless modified herein.

2.1.7 Barbed Tape

Reinforced barbed tape, double coil single coil, for fence toppings shall be fabricated from 430 series stainless steel with a hardness range of Rockwell (30N) 37-45 conforming to the requirements of ASTM A 176. The stainless steel strip shall be 0.64 mm thick by 25.4 mm wide before fabrication. Each barb shall be a minimum of 30.5 mm in length, in groups of 4, spaced on 101.6 mm centers. The stainless steel core wire shall have a 2.5 mm diameter with a minimum tensile strength of 9.68 MPa and be in accordance with ASTM A 478. Reinforced barbed tape, single coil, for ground application shall meet the above requirements. Sixteen gauge stainless steel twistable wire ties shall be used for attaching the barbed tape to the barbed wire.

2.1.8 Concrete

ASTM C 94, using 19 mm maximum size aggregate, and having minimum compressive strength of 21 MPa at 28 days. Grout shall consist of one part

portland cement to three parts clean, well-graded sand and the minimum amount of water to produce a workable mix.

2.1.9 Padlocks

ASTM F 883, Type PO1, Grade 2, Size 44.4 mm. Padlocks shall be keyed alike and each lock shall be furnished with two keys.

PART 3 EXECUTION

3.1 GENERAL

Fence shall be installed to the lines and grades indicated. The area on either side of the fence line shall be cleared to the extent indicated. Line posts shall be spaced equidistant at intervals not exceeding 3.05 m. Terminal (corner, gate, and pull) posts shall be set at abrupt changes in vertical and horizontal alignment. Fabric shall be continuous between terminal posts; however, runs between terminal posts shall not exceed 152.4 m. Any damage to galvanized surfaces, including welding, shall be repaired with paint containing zinc dust in accordance with ASTM A 780.

3.2 EXCAVATION

Post holes shall be cleared of loose material. Waste material shall be spread where directed. The ground surface irregularities along the fence line shall be eliminated to the extent necessary to maintain a 25.4 mm clearance between the bottom of the fabric and finish grade.

3.3 POSTS

Posts shall be set plumb and in alignment. Except where solid rock is encountered, posts shall be set in concrete to the depth indicated on the drawings. Where solid rock is encountered with no overburden, posts shall be set to a minimum depth of 457 mm in rock. Where solid rock is covered with an overburden of soil or loose rock, posts shall be set to the minimum depth indicated on the drawing unless a penetration of 457 mm in solid rock is achieved before reaching the indicated depth, in which case depth of penetration shall terminate. All portions of posts set in rock shall be grouted. Portions of posts not set in rock shall be set in concrete from the rock to ground level. Posts set in concrete shall be set in holes not less than the diameter shown on the drawings. Diameters of holes in solid rock shall be at least 25.4 mm greater than the largest cross section of the post. Concrete and grout shall be thoroughly consolidated around each post, shall be free of voids and finished to form a dome. Concrete and grout shall be allowed to cure for 72 hours prior to attachment of any item to the posts. Group II line posts may be mechanically driven, for temporary fence construction only, if rock is not encountered. Driven posts shall be set to a minimum depth of 914 mm and shall be protected with drive caps when being set. Fence post rigidity shall be tested by applying a 222.4 newtons force on the post, perpendicular to the fabric, at 1.52 m above ground. Post movement measured at the point where the force is applied shall be less than or equal to 19 mm from the relaxed position. Every tenth post shall be tested for rigidity. When a post fails this test, further tests on the next four posts on either side of the failed post shall be made. All failed posts shall be removed, replaced, and retested at the Contractor's expense.

3.4 RAILS

3.4.1 Top Rail

Top rail shall be supported at each post to form a continuous brace between terminal posts. Where required, sections of top rail shall be joined using sleeves or couplings that will allow expansion or contraction of the rail. Bottom rail, if required for high security fence, shall be installed as indicated on the drawings.

3.4.2 Bottom Rail

The bottom rail shall be bolted to double rail ends and double rail ends shall be securely fastened to the posts. Bolts shall be peened to prevent easy removal. Bottom rail shall be installed before chain link fabric.

3.5 BRACES AND TRUSS RODS

Braces and truss rods shall be installed as indicated and in conformance with the standard practice for the fence furnished. Horizontal (compression) braces and diagonal truss (tension) rods shall be installed on fences over 1.83 m in height. A center brace or 2 diagonal truss rods shall be installed on 3.66 m fences. Braces and truss rods shall extend from terminal posts to line posts. Diagonal braces shall form an angle of approximately 40 to 50 degrees with the horizontal. No bracing is required on fences 1.83 m high or less if a top rail is installed.

3.6 TENSION WIRES

Tension wires shall be installed along the top and bottom of the fence line and attached to the terminal posts of each stretch of the fence. Top tension wires shall be installed within the top 305 mm of the installed fabric. Bottom tension wire shall be installed within the bottom 152 mm of the installed fabric. Tension wire shall be pulled taut and shall be free of sag.

3.7 CHAIN LINK FABRIC

Chain link fabric shall be installed on the side of the post indicated. Fabric shall be attached to terminal posts with stretcher bars and tension bands. Bands shall be spaced at approximately 381 mm intervals. The fabric shall be installed and pulled taut to provide a smooth and uniform appearance free from sag, without permanently distorting the fabric diamond or reducing the fabric height. Fabric shall be fastened to line posts at approximately 381 mm intervals and fastened to all rails and tension wires at approximately 305 mm intervals. Fabric shall be cut by untwisting and removing pickets. Splicing shall be accomplished by weaving a single picket into the ends of the rolls to be joined. The bottom of the installed fabric shall be 50.8 mm (plus or minus 12.7 mm above the ground. After the fabric installation is complete, the fabric shall be exercised by applying a 222 push-pull force at the center of the fabric between posts. The use of a 133 newtons pull at the center of the panel shall cause fabric deflection of not more than 63.5 mm when pulling fabric from the post side of the fence. Every second fence panel shall meet this requirement. All failed panels shall be resecured and retested at the Contractor's expense.

3.8 BARBED WIRE SUPPORTING ARMS AND BARBED WIRE

Barbed wire supporting arms and barbed wire shall be installed as indicated and as recommended by the manufacturer. Supporting arms shall be anchored

to the posts in a manner to prevent easy removal with hand tools. Supporting arms shall be anchored with 9.5 mm diameter plain pin rivets or, at the Contractor's option, with studs driven by low-velocity explosive-actuated tools for steel, wrought iron, ductile iron, or malleable iron. Studs driven by an explosive-actuated tool shall not be used with gray iron or other material that can be fractured. A minimum of two studs per support arm shall be used. Barbed wire shall be pulled taut and attached to the arms with clips or other means that will prevent easy removal

3.9 GATES

Gates shall be installed at the locations shown. Hinged gates shall be mounted to swing as indicated. Latches, stops, and keepers shall be installed as required. Padlocks shall be attached to gates or gate posts with chains. Hinge pins, and hardware shall be welded or otherwise secured to prevent removal.

END OF SECTION

SECTION 03100

STRUCTURAL CONCRETE FORMWORK

PART 1 GENERAL

1.1 SUMMARY (NOT APPLICABLE)

1.2 REFERENCES

The publications listed below form a part of this specification to the extent referenced. The publications are referred to in the text by basic designation only.

AMERICAN CONCRETE INSTITUTE (ACI)

ACI 347 (1989) Formwork For Concrete, Fifth Edition

1.3 SUBMITTALS

Government approval is required for submittals with a "GA" designation; submittals having an "FIO" designation are for information only. The following shall be submitted in accordance with Section 01300 SUBMITTAL PROCEDURES:

SD-01 Data

Design Analysis and Calculations; GA.

Design analysis and calculations for form design and methodology used in the design shall be submitted.

Manufacturer's Data; GA.

Manufacturer's data shall include literature describing form materials, accessories, and form releasing agents.

Manufacturer's Instructions; GA.

Manufacturer's recommendation on method and rate of application shall be provided.

SD-04 Drawings

Formwork; GA.

Drawings showing details of formwork including joints, supports, studding and shoring, and sequence of form and shoring removal.

1.4 DESIGN

Formwork shall be designed in accordance with methodology of ACI 347 for anticipated loads, lateral pressures, and stresses. Forms shall be capable of producing a surface which meets the requirements of the class of finish specified in Section 03300 CONCRETE FOR BUILDING CONSTRUCTION. Forms shall be capable of withstanding the pressures resulting from placement and vibration of concrete.

PART 2 PRODUCTS

2.1 FORM MATERIALS

2.1.1 Forms

Forms for finished surfaces, except where concrete is placed against earth, shall be wood or steel or other approved concrete form material.

2.1.2 Form Ties

Form ties shall be factory-fabricated metal or fiberglass ties. Metal ties shall be of the removable or internal disconnecting or snap-off type, and shall be of a design that will not permit form deflection and will not spall concrete upon removal. Solid backing shall be provided for each tie. Except where removable tie rods are used, ties shall not leave holes in the concrete surface less than 7.5 mm nor more than 25 mm deep and not more than 25 mm in diameter. Removable tie rods shall be not more than 37.5 mm in diameter. Fiberglass ties shall be removed by grinding to expose a smooth finished surface.

2.1.3 Form Releasing Agents

Form releasing agents shall be commercial formulations that will not bond with, stain or adversely affect concrete surfaces. Agents shall not impair subsequent treatment of concrete surfaces depending upon bond or adhesion nor impede the wetting of surfaces to be cured with water or curing compounds.

PART 3 EXECUTION

3.1 INSTALLATION

Forms shall be mortar tight, properly aligned and adequately supported to produce concrete surfaces meeting the surface requirements specified in Section 03300 CONCRETE FOR BUILDING CONSTRUCTION and conforming to construction tolerance given in TABLE 1. Where forms for continuous surfaces are placed in successive units, care shall be taken to fit the forms over the completed surface so as to obtain accurate alignment of the surface and to prevent leakage of mortar. Forms shall not be reused if there is any evidence of surface wear and tear or defects which would impair the quality of the surface. Surfaces of forms to be reused shall be cleaned of mortar from previous concreting and of all other foreign material before reuse. Form ties that are to be completely withdrawn shall be coated with a nonstaining bond breaker.

3.2 CHAMFERING

Except as otherwise shown, external corners that will be exposed shall be chamfered, beveled, or rounded by moldings placed in the forms.

3.3 COATING

Forms for finished surfaces shall be coated with a form releasing agent before the form or reinforcement is placed in final position. The coating shall be used as recommended in the manufacturer's printed or written instructions. Forms for finished surfaces may be wet with water in lieu of coating immediately before placing concrete, except that in cold weather with probable freezing temperatures coating shall be mandatory. Surplus

coating on form surfaces and coating on reinforcing steel and construction joints shall be removed before placing concrete.

3.4 REMOVAL OF FORMS

Forms shall be removed in a manner that will prevent injury to the concrete and ensure the complete safety of the structure. Formwork for columns, walls, sides of beams and other parts not supporting the weight of concrete may be removed when the concrete has attained sufficient strength to resist damage from the removal operation but not before at least 24 hours has elapsed since concrete placement. Supporting forms and shores shall not be removed from beams, floors and walls until the structural units are strong enough to carry their own weight and any other construction or natural loads. In no case will supporting forms or shores be removed before the concrete strength has reached 70 percent of design strengths as determined by field cured cylinders or other approved methods. This strength shall be demonstrated by job-cured test specimens, and by a structural analysis considering the proposed loads in relation to these test strengths and the strength of forming and shoring system. The job-cured test specimens for form removal purposes shall be provided in numbers as directed and shall be in addition to those required for concrete quality control. The specimens shall be removed from molds at the age of 24 hours and shall receive, insofar as possible, the same curing and protection as the structures they represent.

TABLE 1
TOLERANCES FOR FORMED SURFACES

	1.	Variations from the plumb:
a.	In the lines and surfaces of columns, piers, walls and in arises.	In any 3 meters of length -- 7.5 mm Maximum for entire length --- 25 mm
b.	For exposed corner columns, control-joint grooves, and other conspicuous lines.	In any 6 meters of length ---7.5 mm Maximum for entire length --12.5 mm
	2.	Variation from the level or from the grades indicated on the drawings:
a.	In slab soffits, ceilings, beam soffits, and in arrises, measured before removal of supporting shores.	In any 3 meters of length ---------- 7.5 mm In any bay or in any 6 meters of length -- 10 mm Maximum for entire length - 20 mm
b.	In exposed lintels, sills, parapets, horizontal grooves, and other conspicuous lines.	In any bay or in any 6 meters of length ------ ---------- 7.5 mm Maximum for entire length -12.5 mm

3. Variation of the linear building lines from established position in plan.	In any 6 meters ---------- 12.5 mm Maximum ---------- 25 mm
4. Variation of distance between walls, columns, partitions.	7.5 mm per 3 meters of distance, but not more than 12.5 mm in any one bay, and not more than 25 mm total variation
5. Variation in the sizes and locations of sleeves, floor openings, and wall opening.	Minus ---------- 7.5 mm Plus---------- 12.5 mm
6. Variation in cross-sectional dimensions of columns and beams and in the thickness of slabs and walls.	Minus ---------- 7.5 mm Plus ---------- 12.5 mm
7. Footings:	
a. Variation of dimensions in plan.	Minus ---------- 12.5 mm Plus ---------- 50 mm when formed or plus 75 mm when placed against unformed excavation
b. Misplacement of eccentricity.	2 percent of the footing width in the direction of misplacement, but not more than ----- 50 mm
c. Reduction in thickness.	Minus --------- 5 percent of specified thickness
8. Variation in steps:	
a. In a flight of stairs	Riser ---------- 3 mm Tread ---------- 7.5 mm
b. In consecutive steps	Riser ---------- 2 mm Tread ---------- 7.5 mm

END OF SECTION

SECTION 03200

CONCRETE REINFORCEMENT

PART 1 GENERAL

1.1 SUMMARY (NOT APPLICABLE)

1.2 REFERENCES

The publications listed below form a part of this specification to the extent referenced. The publications are referred to in the text by basic designation only.

AMERICAN CONCRETE INSTITUTE (ACI)

ACI 318/318R	(1983; Rev 1995) Building Code Requirements for Structural Concrete (ACI 318-95) and Commentary (ACI 318R-95); Errata

AMERICAN SOCIETY FOR TESTING AND MATERIALS (ASTM)

ASTM A 53	(Rev A, 1995)) Pipe, Steel, Black and Hot-Dipped Zinc-Coated (Galvanized) Welded and Seamless, for Ordinary Uses
ASTM A 82	(1985; Rev A 1995) Steel Wire, Plain for Concrete Reinforcement
ASTM A 184/ A 184M	(1990) Fabricated Deformed Steel Bar Mats for Concrete Reinforcement
ASTM A 185	(1994) Steel Welded Wire Fabric Plain, for Concrete Reinforcement
ASTM A 497	(1995) Steel Welded Wire Fabric Deformed, for Concrete Reinforcement
ASTM A 499	(1989) Steel Bars and Shapes, Carbon Rolled from "T" Rails
ASTM A 615/A 615M	(1986; Rev C 1995) Deformed and Plain Billet-Steel Bars for Concrete Reinforcement
ASTM A 675/A 675M	(1985; Rev A 1990) Steel Bars, Carbon, Hot-Wrought, Special Quality, Mechanical Properties
ASTM A 706/A 706M	(1996) Low-Alloy Steel Deformed Bars for Concrete Reinforcement

AMERICAN WELDING SOCIETY, INC. (AWS)

AWS D1.4	(1992) Structural Welding Code - Reinforcing Steel

CONCRETE REINFORCING STEEL INSTITUTE (CRSI)

CRSI 01 (Jan 1986; 24th Ed.) Manual of Standard Practice

1.3 SUBMITTALS

Government approval is required for submittals with a "GA" designation; submittals having an "FIO" designation are for information only. The following shall be submitted in accordance with Section 01300 SUBMITTAL PROCEDURES:

SD-04 Drawings

Detail Drawings; GA.

Detail drawings shall be submitted and shall show details of reinforcement including the location and mark number of each reinforcing bar, schedules, sizes, grades, and splicing and bending details. Drawings shall show support details including types, sizes and spacing.

SD-13 Certificates

Certified Mill Reports; GA.

Certified copies of mill reports attesting that the reinforcing steel furnished meets the requirements specified shall be submitted prior to the installation of reinforcing steel.

1.4 QUALIFICATIONS

Welders shall be qualified in accordance with AWS D1.4. Qualification test shall be performed at the worksite and the Contractor shall notify the Contracting Officer 24 hours prior to conducting tests. Welding procedures qualified by others and welders qualified by another employer may be accepted as permitted by AWS D1.4.

1.5 DELIVERY AND STORAGE

Reinforcement and accessories shall be stored off the ground on platforms, skids, or other supports.

PART 2 PRODUCTS

2.1 REINFORCING STEEL

Reinforcing steel shall be deformed bars conforming to ASTM A 615 or ASTM A 706, grades and sizes as indicated. Cold drawn wire used for spiral reinforcement shall conform to ASTM A 82.

2.2 WELDED WIRE FABRIC

Welded wire fabric shall conform to ASTM A 185 or ASTM A 497. Welded wire fabric shall be supplied in flat sheets. No rolled mesh shall be used.

2.3 WIRE TIES

Wire ties shall be 16-gauge or heavier black annealed steel wire.

2.4 SUPPORTS

Bar supports for formed surfaces shall be designed and fabricated in accordance with CRSI 01 and shall be steel or precast concrete blocks. Precast concrete block shall have compressive strength equal to that of the surrounding concrete. Where concrete formed surfaces will be exposed to weather or where surfaces are to be painted, steel supports within 12.5 mm of concrete surface shall be plastic protected or of stainless steel. Concrete supports used in concrete exposed to view shall have the same color and texture as the finish surface. For slabs on grade, supports shall be precast concrete blocks, plastic coated steel fabricated with bearing plates, or specifically designed wire-fabric supports fabricated of plastic.

PART 3 EXECUTION

3.1 REINFORCEMENT

Reinforcement shall be fabricated to shapes and dimensions shown and shall conform to the requirements of ACI 318. Reinforcement shall be cold bent unless otherwise authorized. Bending may be accomplished in the field or at the mill. Bars shall not be bent after embedment in concrete. Safety caps shall be placed on all exposed ends of vertical concrete reinforcement bars that pose a danger to life safety. Tack welding to, or of, reinforcement is prohibited.

3.1.1 Placement

Reinforcement shall be free from loose rust and scale, dirt, oil, or other deleterious coating that could reduce bond with the concrete. Reinforcement shall be placed in accordance with ACI 318 at locations shown plus or minus one bar diameter. Reinforcement shall not be continuous through expansion joints. For slabs on grade reinforcement shall be sloped 75 mm each side of contraction joints, construction joints, and expansion joints. Concrete coverage shall be as indicated or as required by ACI 318. If bars are moved more than one bar diameter to avoid interference with other reinforcement, conduits or embedded items, the resulting arrangement of bars, including additional bars required to meet structural requirements, shall be approved before concrete is placed.

3.1.2 Splicing

Splices of reinforcement shall conform to ACI 318 and shall be made only as required or indicated. Splicing shall be by lapping or by mechanical or welded butt connection; except that lap splices shall not be used for bars larger than R 35 unless otherwise indicated. Lapped bars shall be placed in contact and securely tied or spaced transversely apart to permit the embedment of the entire surface of each bar in concrete. Lapped bars shall not be spaced farther apart than one-fifth the required length of lap or 150 mm. Mechanical butt splices shall be in accordance with the recommendation of the manufacturer of the mechanical splicing device. Butt splices shall develop 125 percent of the specified minimum yield tensile strength of the spliced bars or of the smaller bar in transition splices. Bars shall be flame dried before butt splicing. Adequate jigs and clamps or other devices shall be provided to support, align, and hold the longitudinal centerline of the bars to be butt spliced in a straight line.

3.2 WELDED-WIRE FABRIC

Welded-wire fabric shall be placed in slabs as indicated. Fabric placed in slabs on grade shall be continuous within each panel. Lap splices shall be made in such a way that the overlapped area equals the distance between the outermost crosswires plus 50 mm. Laps shall be staggered to avoid

continuous laps in either direction. Fabric shall be wired or clipped together at laps at intervals not to exceed 1.2 meters. Fabric shall be positioned by the use of supports. Fabric shall be stopped 50 mm clear of pavement edges and expansion, isolation, contraction, and construction joints in slabs on grade.

END OF SECTION

SECTION 03250

JOINTS IN SLABS ON GRADE AND WATERSTOPS

PART 1 GENERAL

1.1 SUMMARY (NOT APPLICABLE)

1.2 REFERENCES

The publications listed below form a part of this specification to the extent referenced. The publications are referred to in the text by basic designation only.

AMERICAN NATIONAL STANDARDS INSTITUTE (ANSI)

ANSI A135.4	(1995) Basic Hardboard

AMERICAN SOCIETY FOR TESTING AND MATERIALS (ASTM)

ASTM D 1751	(1983; Rev 1991) Preformed Expansion Joint Filler for Concrete Paving and Structural Construction (Nonextruding and Resilient Bituminous Types)
ASTM D 1752	(1984; Rev 1992) Preformed Sponge Rubber and Cork Expansion Joint Fillers for Concrete Paving and Structural Construction
ASTM D 2628	(1991) Preformed Polychloroprene Elastomeric Joint Seals for Concrete Pavements
ASTM D 2835	(1989; Rev 1993) Lubricant for Installation of Preformed Compression Seals in Concrete Pavements

CORPS OF ENGINEERS HANDBOOK FOR CONCRETE AND CEMENT (CRD)

CRD-C 513	(1974) Rubber Waterstops
CRD-C 572	(1974) Polyvinylchloride Waterstops

FEDERAL SPECIFICATIONS (FS)

FS SS-S-200	(Rev. E) Sealants, Joint, Two-Component, Jet-Blast-Resistant, Cold-Applied, for Portland Cement Concrete Pavement
FS SS-S-1401	(Rev. C) Sealant, Joint, Non-Jet-Fuel-Resistant, Hot-Applied, for Portland Cement and Asphalt Concrete Pavements
FS SS-S-1614	(Rev. A) Sealants, Joint, Jet-Fuel-Resistant, Hot-Applied, for Portland Cement and Tar Concrete Pavements
FS TT-S-227	(Rev. E) Sealing Compound: Elastomeric Type, Multi-Component (For Calking, Sealing, and Glazing in Buildings and Other Structures)

FS TT-S-230	(Rev. C) Sealant Compound: Elastomeric Type, Single Component, Chemically Curing (For Caulking, Sealing, and Glazing in Buildings and Other Structures)

1.3 SUBMITTALS

Government approval is required for submittals with a "GA" designation; submittals having an "FIO" designation are for information only. The following shall be submitted in accordance with Section 01300 SUBMITTAL PROCEDURES:

SD-01 Data

Waterstops; GA.

Manufacturer's product data and recommended instructions for splicing of waterstops shall be submitted.

SD-13 Certificates

Certificates of Compliance; FIO.

Certificates of compliance stating that the joint filler and sealant materials and waterstops onform to the requirements specified shall be submitted.

1.4 DELIVERY AND STORAGE

Material delivered and placed in storage shall be stored off the ground and protected from moisture, dirt, and other contaminants. Sealants shall be delivered in the manufacturer's original unopened containers. Sealants whose shelf life has expired shall be removed from the site.

PART 2 PRODUCTS

2.1 CONTRACTION-JOINT STRIPS

Contraction-joint strips shall be 3 mm thick tempered hardboard conforming to ANSI A135.4, Class 1. In lieu of hardboard strips, rigid polyvinylchloride (PVC) insert strips specifically designed to induce controlled cracking in slabs on grade may be used. Such insert strips shall have removable top section.

2.2 EXPANSION-JOINT FILLER

Expansion-joint filler shall be premolded material conforming to ASTM D 1751 or ASTM D 1752. Unless otherwise indicated, filler material shall be 10 mm thick and of a width applicable for the joint formed.

2.3 JOINT SEALANT

Joint sealant shall conform to the following:

2.3.1 Hot-Poured Type

FS SS-S-1401.

2.3.2 Elastomeric Type, Single Component

FS TT-S-230, Type I.

2.3.3 Elastomeric Type, Multi-Component

FS TT-S-227.

2.4 WATERSTOPS

Waterstops shall conform to CRD-C 513 or CRD-C 572.

2.5 BACKER ROD

Backer rod shall be compressible material compatible with sealant.

PART 3 EXECUTION

3.1 JOINTS

Joints shall be installed at locations indicated and as authorized. If not shown, crack control shall be provided by longitudinal construction joints and transverse contraction joints. Lanes shall be one panel wide. Joints not shown shall be located at column centerlines and intermediate intervals so that each panel shall be not more than 50 square meters in area. Panels shall be approximately square with no side longer than 7.5 meters. Square-shaped isolation joints shall be provided for the full slab depth at columns on separate footings, and shall be constructed so that corners of isolation joints will meet crack-control joints. Where columns bare on thickened slabs or thickened edges, contraction or expansion joints shall be offset.

3.1.1 Contraction Joints

Contraction joints may be constructed by inserting tempered hardboard strips or rigid PVC insert strips into the plastic concrete or by cutting the concrete with a saw after concrete has set. Joints shall be approximately 3 mm wide and shall extend into the slab one-fourth the slab thickness but not less than 25 mm.

3.1.1.1 Joint Strips

Strips shall be of the required dimensions and as long as practicable. After the first floating, the concrete shall be grooved with a tool at the joint locations. The strips shall be inserted in the groove and depressed until the top edge of the vertical surface is flush with the surface of the slab. The slab shall be floated and finished as specified. Working of the concrete adjacent to the joint shall be the minimum necessary to fill voids and consolidate the concrete. Where indicated, the top portion of the strip shall be sawed out after the curing period to form a recess for sealer. The removable section of PVC strips shall be discarded and the insert left in place. Means shall be provided to insure true alignment of the strips is maintained during insertion. Strips shall not vary from alignment more than 7.5 mm in 3 meters.

3.1.1.2 Sawed Joints

Joint sawing shall be early enough to prevent uncontrolled cracking in the slab, but late enough that this can be accomplished without appreciable spalling. Concrete-sawing machines shall be adequate in number and power, and with sufficient replacement blades to complete the sawing at the

required rate. Joints shall be cut to true alignment and shall be cut in sequence of concrete placement. Sludge and cutting debris shall be removed.

3.1.2 Expansion Joints

Premolded expansion joint filler shall be used in expansion and isolation joints in slabs around columns and between slabs on grade and vertical surfaces where indicated. The filler shall extend the full slab depth, unless otherwise indicated. The edges of the joint shall be neatly finished with an edging tool of 3 mm (1/8-inch) radius, except where a resilient floor surface will be applied. Where the joint is to receive a sealant, the filler strips shall be installed at the proper level below the finished floor with a slightly tapered, dressed-and-oiled wood strip temporarily secured to the top thereof to form a recess 20 mm deep to be filled with sealant. The wood strip shall be removed after the concrete has set. In lieu of the wood strip a removable expansion filler cap designed and fabricated for this purpose may be used.

3.1.3 Construction Joints

Construction joints in slabs on grade shall be doweled as shown. See Section: CONCRETE REINFORCEMENT for dowel requirements. The edges of the joint shall be neatly finished with an edging tool of 3 mm (1/8-inch) radius, except where a resilient floor surface will be applied.

3.1.4 Joint Sealant

Joints in slabs shall be filled with joint sealant, except where floor covering is required. Types, locations, and joint reservoir dimensions of sealants shall be as indicated. Joint surfaces shall be sandblasted, cleaned, and dried, so that they are free of oil or other foreign material which would adversely affect the bond between sealant and concrete. Joint sealant shall be applied as recommended by the manufacturer of the sealant.

3.2 WATERSTOPS

Waterstops shall be of the type indicated and shall be installed at the locations shown to form a continuous water-tight diaphragm. Adequate provision shall be made to support and completely protect the waterstops during the progress of the work. Any waterstop punctured or damaged shall be repaired or replaced. Splices shall be made in conformance with the recommendations of the waterstop manufacturer. Continuity of cross sectional features shall be maintained across the splice. Splices showing evidence of separation after bending shall be remade.

END OF SECTION

SECTION 03300

CONCRETE FOR BUILDING CONSTRUCTION

PART 1 GENERAL

1.1 SUMMARY (NOT APPLICABLE)

1.2 REFERENCES

The publications listed below form a part of this specification to the extent referenced. The publications are referred to in the text by basic designation only.

AMERICAN CONCRETE INSTITUTE (ACI)

ACI 211.1	(1991) Selecting Proportions for Normal, Heavyweight, and Mass Concrete
ACI 301	Standard Specification For Structural Concrete
ACI 304R	(1989) Guide for Measuring, Mixing, Transporting, and Placing Concrete
ACI 305R	(1991) Hot Weather Concreting
ACI 318	(1995) Building Code Requirements for Reinforced Concrete

AMERICAN SOCIETY FOR TESTING AND MATERIALS (ASTM)

ASTM C 31/C 31M	(1995) Making and Curing Concrete Test Specimens in the Field
ASTM C 33	(1993) Concrete Aggregates
ASTM C 39	(1994) Compressive Strength of Cylindrical Concrete Specimens
ASTM C 42	(1994) Obtaining and Testing Drilled Cores and Sawed Beams of Concrete
ASTM C 78	(1994) Flexural Strength of Concrete (Using Simple Beam With Third-Point Loading)
ASTM C 94	(1995) Ready-Mixed Concrete
ASTM C 109/C 109M	(1995) Compressive Strength of Hydraulic Cement Mortars
ASTM C 138	(1992) Unit Weight, Yield, and Air Content(Gravimetric) of Concrete
ASTM C 143	(1978; Rev A 1990) Slump of Hydraulic Cement Concrete
ASTM C 150	(1995) Portland Cement

ASTM C 171	(1995) Sheet Materials for Curing Concrete
ASTM C 172	(1990) Sampling Freshly Mixed Concrete
ASTM C 173	(1978; Rev A 1994) Air Content of Freshly Mixed Concrete by the Volumetric Method
ASTM C 192/C 192M	(1995) Making and Curing Concrete Test Specimens in the Laboratory
ASTM C 231	(1982; Rev B 1991) Air Content of Freshly Mixed Concrete by the Pressure Method
ASTM C 260	(1995) Air-Entraining Admixtures for Concrete
ASTM C 494	(1992) Chemical Admixtures for Concrete
ASTM C 552	(1991) Cellular Glass Thermal Insulation
ASTM C 578	(1995) Rigid, Cellular Polystyrene Thermal Insulation
ASTM C 591	(1994) Unfaced Preformed Rigid Cellular Polyisocyanurate Thermal Insulation
ASTM C 597	(1983) Pulse Velocity Through Concrete
ASTM C 618	(1996) Coal Fly Ash and Raw or Calcined Natural Pozzolan for Use as a Mineral Admixture in Concrete
ASTM C 803	(1990) Penetration Resistance of Hardened Concrete
ASTM C 805	(1994) Rebound Number of Hardened Concrete
ASTM C 1017	(1992) Chemical Admixture for Use in Producing Flowing Concrete
ASTM E 96	(1995) Water Vapor Transmission of Materials

CONCRETE PLANT MANUFACTURERS BUREAU (CPMB)

CPMB-01	(8th Rev. 1986) Concrete Plant Standards

FEDERAL SPECIFICATIONS (FS)

FS CCC-C-467	(Rev. C) Cloth, Burlap, Jute (or Kenaf)

NATIONAL READY-MIXED CONCRETE ASSOCIATION (NRMCA)

NRMCA-01	(Jan. 1, 1976) Certification of Ready-Mixed Concrete Production Facilities

TRUCK MIXER MANUFACTURERS BUREAU (TMMB)

TMMB-01	(Jan. 1, 1981; 10th Rev.) Truck Mixer and Agitator Standards

U.S. ARMY CORPS OF ENGINEERS HANDBOOK FOR CEMENT AND CONCRETE (CRD)

CRD-C 300	(1988) Membrane-Forming Compounds for Curing Concrete
CRD-C 621	(1988) Specification for Non-Shrink Grout

1.3 SUBMITTALS

Government approval is required for submittals with a "GA" designation; submittals having an "FIO" designation are for information only. The following shall be submitted in accordance with Section 01300 SUBMITTAL PROCEDURES:

SD-01 Data

Mix Designs (Contractor and Job); GA.

At least 14 days prior to commencing concrete placing operations, the Contractor shall submit the results of trial mix along with a statement giving the maximum nominal coarse aggregate size and the proportions of all ingredients that will be used in the manufacture of each strength of concrete. Aggregate weights shall be based on the saturated surface dry condition. The statement shall be accompanied by test results from an independent commercial testing laboratory, attesting that the proportions selected will produce concrete of the qualities indicated. Concrete mixes designed for pumping shall so state on the mix design test reports. No substitutions shall be made in the materials used in the work without additional tests to show that the quality of the concrete is satisfactory.

SD-09 Reports

Laboratory Test Reports; GA.

Certified copies of laboratory test reports, including all test data, shall be submitted for aggregate, cement and pozzolan, showing materials meet all requirements specified in PART 2 - PRODUCTS.

SD-13 Certificates

Certificates of Compliance; FIO.

Certificate of compliance shall be submitted for concrete admixtures abrasive aggregate, perimeter insulation, and vapor barrier showing conformance to requirements specified in PART 2 - PRODUCTS.

1.4 GENERAL REQUIREMENTS

1.4.1 Strength Requirements

Structural concrete for all work shall have a 28-day compressive strength of 25,000 kiloPascals.

1.4.2 Air Entrainment

Concrete exposed to weather shall contain from 5 to 7 percent total air.

1.4.3 Special Properties

Concrete may contain other admixtures, such as water reducers, superplasticizers, or set retarding agents to provide special properties to the concrete, if approved.

1.4.4 Cementitious Content

Concrete shall contain a minimum cementitious content of 310 kilograms per cubic meter to ensure satisfactory durability and finishability. Water/cement ratio, measured by weight, shall not exceed 0.40 for slabs-on-grade.

1.4.5 Slump

Slump shall be within the following limits:

Structural Element	Slump in Millimeters Minimum	Maximum
Walls, columns and beams	50	100
Foundation walls, substructure walls, footings, pavement, and slabs	25	75
Any structural concrete approved for placement by pumping	None	100

*** Where use of superplasticizers are approved to produce flowing concrete these slump requirements do not apply.

1.4.6 Technical Service for Specialized Concrete

The service of a technical representative shall be obtained to oversee proportioning, batching, mixing, placing, consolidating and finishing of specialized structural concrete, such as lightweight or flowing concrete until field controls indicate concrete of specified quality is furnished.

1.5 PROPORTIONS OF MIX

1.5.1 Mixture Proportioning, Normal Weight Concrete

Trial batches shall contain materials proposed to be used in the project. Trial mixtures having proportions, consistencies and air content suitable for the work shall be made based on methodology described in ACI 211.1, using at least three different water-cement ratios. Concrete designed for pumping shall conform to ACI 304 requirements for proportioning pumpable concrete. Trial mixes shall be proportioned to produce concrete strengths specified. Trial mixtures shall be designed for maximum permitted slump and air content. The temperature of concrete in each trial batch shall be reported. For each water-cement ratio at least three test cylinders for each test age shall be made and cured in accordance with ASTM C 192. They shall be tested at 7 and 28 days in accordance with ASTM C 39. From these test results a curve shall be plotted showing the relationship between water-cement ratio and strength.

1.5.2 Average Strength

In meeting the strength requirements specified, the selected mixture proportion shall produce an average compressive strength exceeding the

specified strength by the amount indicated below. Where a concrete production facility has test records, a standard deviation shall be established. Test records from which a standard deviation is calculated shall represent materials, quality control procedures, and conditions similar to those expected; shall represent concrete produced to meet a specified strength or strengths within 6,500 kPa of that specified for proposed work; and shall consist of at least 30 consecutive tests. A strength test shall be the average of the strengths of two cylinders made from the same sample of concrete and tested at 28 days or at other test age designated for determination of the specified strength.

1.5.2.1 Test Records Exceeding 29

Required average compressive strength used as the basis for selection of concrete proportions shall be the larger of the specified strength plus the standard deviation multiplied by 1.34 or the specified strength plus the standard deviation multiplied by 2.33 minus 3,400 kPa.

1.5.2.2 Test Records Less Than 29

Where a concrete production facility does not have test records meeting the above requirements but does have a record based on 15 to 29 consecutive tests, a standard deviation may be established as the product of the calculated standard deviation and a modification factor from the following table:

No. of tests (1)	Modification factor for standard deviation
less than 15	See Note
15	1.16
20	1.08
25	1.03
30 or more	1.00

(1) Interpolate for intermediate numbers of tests.

When a concrete production facility does not have field strength test records for calculation of standard deviation or the number of tests is less than 15, the required average strength shall be:

a. The specified strength plus 7000 kPa for specified strengths less than 21,000 kPa.

b. The specified strength plus 8400 kPa for specified strengths of 21,000 to 35,000 kPa.

c. The specified strength plus 9800 kPa for specified strengths greater than 35,000 kPa.

1.6 STORAGE OF MATERIALS

Cement and pozzolan shall be stored in weathertight buildings, bins, or silos which will exclude moisture and contaminants. Aggregate stockpiles shall be arranged and used in a manner to avoid excessive segregation and to prevent contamination with other materials or with other sizes of aggregates. Reinforcing bars and accessories shall be stored above the ground on platforms, skids or other supports. Other materials shall be stored in such a manner as to avoid contamination and deterioration. Admixtures which have been in storage at the project site for longer than 6

months or which have been subjected to freezing shall not be used unless retested and proven to meet the specified requirements.

PART 2 PRODUCTS

2.1 ADMIXTURES

Admixtures shall conform to the following:

2.1.1 Accelerating Admixture

ASTM C 494, Type C or E. No calcium chloride or admixtures that contain chlorides shall be used.

2.1.2 Air-Entraining Admixture

ASTM C 260.

2.1.3 Flowing Concrete Admixture

ASTM C 1017, Type 1 or 2.

2.1.4 Water-Reducing or Retarding Admixture

ASTM C 494, Type A, B, D, F, or G.

2.2 CEMENTITIOUS MATERIALS

Cementitious materials shall each be of one type and from one source when used in concrete which will have surfaces exposed in the finished structure. Cementitious materials shall conform to one of the following:

2.2.1 Cement

ASTM C 150, Type I, II or III, low alkali.

2.2.2 Pozzolan

ASTM C 618, Class F, including limit on available alkalies, "Table 2 - Supplementary Optional Chemical Requirements," and uniformity requirements, "Table 4 - Supplementary Optional Physical Requirements."

2.3 AGGREGATES

Aggregates shall conform to the following:

2.3.1 Normal Weight Aggregate

ASTM C 33. Grading requirement for coarse aggregate shall conform to size number 57 or 67.

2.4 CURING MATERIALS

2.4.1 Burlap

FS CCC-C-467.

2.4.2 Impervious Sheets

ASTM C 171, type optional, except that polyethylene film, if used, shall be white opaque.

2.4.3 Membrane-Forming Compounds

CRD-C-300, pigmented or nonpigmented. Nonpigmented compounds shall contain a fugitive dye.

2.5 EMBEDDED ITEMS

Embedded items shall be of the size and type indicated or as needed for the application. Dovetail slots shall be galvanized steel.

2.6 NONSHRINK GROUT

Nonshrink grout shall conform to CRD-C 621 and shall be a formulation suitable for the application.

2.7 NONSLIP SURFACING MATERIAL

Nonslip surfacing material shall consist of 55 percent, minimum, aluminum oxide or silicon-dioxide abrasive ceramically bonded together to form a homogenous material sufficiently porous to provide a good bond with portland paste; or factory-graded emery material consisting of not less than 45 percent aluminum oxide and 25 percent ferric oxide. The material shall be well graded from particles retained on the 600 (m sieve to particles passing the 2.36 mm sieve.

2.8 PERIMETER INSULATION

Perimeter insulation shall be 50 mm thick polystyrene conforming to ASTM C 578, Type II; polyurethane conforming to ASTM C 591, Type II; or cellular glass conforming to ASTM C 552, Type I or IV.

2.9 VAPOR BARRIER

Vapor barrier shall be polyethylene sheeting with a minimum thickness of 0.15 millimeters or other equivalent material having a vapor permeance rating not exceeding 30 nanograms per Pascal per second per square meter as determined in accordance with ASTM E 96.

2.10 WATER

Water shall be potable, except that nonpotable water may be used if it produces mortar cubes having 7- and 28-day strengths at least 90 percent of the strength of similar specimens made with water from a municipal supply. The strength comparison shall be made on mortars, identical except for mixing water, prepared and tested in accordance with ASTM C 109. Water for curing shall not contain any substance injurious to concrete, or which causes staining.

PART 3 EXECUTION

3.1 PREPARATION OF SURFACES

Surfaces to receive concrete shall be clean and free from frost, ice, mud, and water. Conduit and other similar items shall be in place and clean of any deleterious substance.

3.1.1 Foundations

Earthwork shall be as specified in Section 02201 EXCAVATION, FILLING, AND BACKFILLING FOR BUILDINGS. Flowing water shall be diverted without washing over freshly deposited concrete. Rock foundations shall be cleaned by high velocity air-water jets, sandblasting, or other approved methods. Debris and loose, semi-detached or unsound fragments shall be removed. Rock surfaces shall be moist but without free water when concrete is placed. Subgrades for foundations and footings shall be damp when concrete is placed.

3.1.2 Perimeter Insulation

Perimeter insulation shall be installed at locations indicated. Adhesive shall be used where insulation is applied to the interior surface of foundation walls.

3.1.3 Vapor Barrier

Unless otherwise indicated, subgrades for slabs in buildings shall be covered with a vapor barrier. Vapor barrier edges shall be lapped at least 100 mm and ends shall be lapped not less than 150 mm. Patches and lapped joints shall be sealed with pressure-sensitive adhesive or tape not less than 50 mm wide and compatible with the membrane.

3.1.4 Preparation of Previously Placed Concrete

Concrete surfaces to which other concrete is to be bonded shall be roughened in an approved manner that will expose sound aggregate uniformly without damaging the concrete. Laitance and loose particles shall be removed. Surfaces shall be moist but without free water when concrete is placed.

3.2 INSTALLATION OF EMBEDDED ITEMS

Embedded items shall be free from oil, loose scale or rust, and paint. Embedded items shall be installed at the locations indicated and required to serve the intended purpose. Voids in sleeves, slots and inserts shall be filled with readily removable material to prevent the entry of concrete.

3.3 BATCHING, MIXING AND TRANSPORTING CONCRETE

Ready-mixed concrete shall be batched, mixed and transported in accordance with ASTM C 94, except as otherwise specified. Truck mixers, agitators, and nonagitating units shall comply with TMMB-01. Plant equipment and facilities shall conform to CPMB-01. Site-mixed concrete shall be mixed in accordance with ACI 301. On-site plant shall conform to the requirements of the Concrete Plant Standards of the Concrete Plant Manufacturers Bureau.

3.3.1 Admixtures

Admixtures shall be batched within an accuracy of 3 percent. Where two or more admixtures are used in the same batch, they shall be batched separately and must be compatible. Retarding admixture shall be added within one minute after addition of water is complete or in the first quarter of the required mixing time, whichever is first. Superplasticizing admixtures shall be added at the project site, and the concrete with the admixture shall be mixed 4 to 5 minutes before placing. Concrete that shows evidence of total collapse or segregation caused by the use of admixture shall be removed from the site.

3.3.2 Control of Mixing Water

No water from the truck system or elsewhere shall be added after the initial introduction of mixing water for the batch except when on arrival at the jobsite, the slump of the concrete is less than that specified. Water added to bring the slump within the specified range shall not change the total water in the concrete to a point that the approved water-cement ratio is exceeded. The drum shall be turned an additional 30 revolutions, or more, until the added water is uniformly mixed into the concrete. Water shall not be added to the batch at any later time.

3.4 SAMPLING AND TESTING

Sampling and Testing is the responsibility of the Contractor and shall be performed by an approved testing agency.

3.4.1 Aggregates

Aggregates for normal weight concrete shall be sampled and tested in accordance with ASTM C 33.

3.4.2 Sampling of Concrete

Samples of concrete for air, slump, unit weight, and strength tests shall be taken in accordance with ASTM C 172.

3.4.2.1 Air Content

Test for air content shall be performed in accordance with ASTM C 173 or ASTM C 231.

3.4.2.2 Slump

Tests shall be performed in accordance with ASTM C 143.

3.4.2.3 Unit Weight

Test for unit weight of normal weight concrete shall be performed in accordance with ASTM C 138.

3.4.3 Evaluation and Acceptance of Concrete

3.4.3.1 Frequency of Testing

Sampling and testing of concrete shall be performed as specified in Section CONTRACTOR QUALITY CONTROL. Samples shall be taken from the truck at location of placement except when concrete is pumped, in which case samples for air content and slump shall be taken at point of placement. Field cured specimens for determining form removal time or when a structure may be put in service shall be made in numbers directed to check the adequacy of curing and protection of concrete in the structure. The specimens shall be removed from the molds at the age of 24 hours and shall be cured and protected, insofar as practicable, in the same manner as that given to the portion of the structure the samples represent.

3.4.3.2 Testing Procedures

Cylinders and beams for acceptance tests shall be molded and cured in accordance with ASTM C 31. Cylinders shall be tested in accordance with ASTM C 39 and beams shall be tested in accordance with ASTM C 78. A

strength test shall be the average of the strengths of two cylinders made from the same sample of concrete and tested at 28 days or at another specified test age.

3.4.3.3 Evaluation of Results

Concrete specified on the basis of compressive strength will be considered satisfactory if the averages of all sets of three consecutive strength test results equal or exceed the specified strength and no individual strength test result falls below the required strength by more than 3,400 kPa. For flexural strength concrete, the strength level of the concrete will be considered satisfactory if the averages of all sets of five consecutive strength test results equal or exceed the required flexural strength, and not more than 20 percent of the strength test results fall below the required strength by more than 350 kPa.

3.4.4 Investigation of Low-Strength Test Results

When any strength test of standard-cured test cylinder falls below the specified strength requirement by more than 3,400 kPa, or if tests of field-cured cylinders indicate deficiencies in protection and curing, steps shall be taken to assure that load-carrying capacity of the structure is not jeopardized. Nondestructive testing in accordance with ASTM C 597, ASTM C 803, or ASTM C 805 may be permitted by the Contracting Officer to determine the relative strengths at various locations in the structure as an aid in evaluating concrete strength in place or for selecting areas to be cored. Such tests, unless properly calibrated and correlated with other test data, shall not be used as basis for acceptance or rejection. When strength of concrete in place is considered potentially deficient, cores shall be obtained and tested in accordance with ASTM C 42. At least three representative cores shall be taken from each member or area of concrete in place that is considered potentially deficient. The location of cores shall be determined by the Contracting Officer to least impair the strength of the structure. If the concrete in the structure will be dry under service conditions, the cores shall be air dried (temperature 15 to 25 degrees C, relative humidity less than 60 percent) for 7 days before testing and shall be tested dry. If the concrete in the structure will be more than superficially wet under service conditions, the cores shall be tested after moisture conditioning in accordance with ASTM C 42. Concrete in the area represented by the core testing will be considered adequate if the average strength of the cores is equal to or at least 85 percent of the specified strength requirement and if no single core is less than 75 percent of the specified strength requirement. If the core tests are inconclusive or impractical to obtain, or if structural analysis does not confirm the safety of the structure, load tests may be directed by the Contracting Officer in accordance with the requirements of ACI 318. Concrete work evaluated by structural analysis or by results of a load test and found deficient shall be corrected in a manner satisfactory to the Contracting Officer. All investigations, testing, load tests, and correction of deficiencies shall be performed, and approved by the Contracting Officer, at the expense of the Contractor.

3.5 CONVEYING CONCRETE

Concrete shall be conveyed from mixer to forms as rapidly as possible and within the time interval specified in paragraph "CONCRETE PLACEMENT" by methods which will prevent segregation or loss of ingredients.

3.5.1 Chutes

When concrete can be placed directly from a truck mixer or other transporting equipment, chutes attached to this equipment may be used. Separate chutes will not be permitted except when specifically approved.

3.5.2 Buckets

Bucket design shall be such that concrete of the required slump can be readily discharged. Bucket gates shall be essentially grout tight when closed. The bucket shall provide means for positive regulations of the amount and rate of deposit of concrete in each dumping position.

3.5.3 Belt Conveyors

Belt conveyors may be used when approved. Belt conveyors shall be designed for conveying concrete and shall be operated to assure a uniform flow of concrete to the final place of deposit without segregation or loss of mortar. Conveyors shall be provided with positive means for preventing segregation of the concrete at transfer points and point of placement.

3.5.4 Pumps

Concrete may be conveyed by positive displacement pumps when approved. Pump shall be the piston or squeeze pressure type. Pipeline shall be steel pipe or heavy duty flexible hose. Inside diameter of the pipe shall be at least three times the maximum size of the coarse aggregate. Distance to be pumped shall not exceed the limits recommended by the pump manufacturer. Concrete shall be supplied to the pump continuously. When pumping is completed, the concrete remaining in the pipeline shall be ejected without contaminating the concrete in place. After each use, the equipment shall be thoroughly cleaned. Flushing water shall be wasted outside the forms.

3.6 CONCRETE PLACEMENT

Mixed concrete which is transported in truck mixers or agitators or concrete which is truck mixed, shall be discharged within 1-1/2 hours or before the drum has revolved 300 revolutions, whichever comes first after the introduction of the mixing water to the cement and aggregates or the introduction of the cement to the aggregates. These limitations may be waived by the Government if the concrete is of such slump after the 1-1/2 hour time or 300 revolution limit has been reached that it can be placed, without the addition of water to the batch. When the concrete temperature is 30 degrees C or higher, the time shall be reduced to 45 minutes. Concrete shall be placed within 15 minutes after it has been discharged from the truck.

3.6.1 Placing Operation

Concrete shall be handled from mixer to forms in a continuous manner until the approved unit of operation is completed. Adequate scaffolding, ramps and walkways shall be provided so that personnel and equipment are not supported by in-place reinforcement. Placing will not be permitted when the sun, heat, wind, or limitations of facilities furnished by the Contractor prevent proper consolidation, finishing and curing. Concrete shall be deposited as close as possible to its final position in the forms, and there shall be no vertical drop greater than 2.5 meters except where suitable equipment is provided to prevent segregation and where specifically authorized. Depositing of the concrete shall be so regulated that it will be effectively consolidated in horizontal layers not more than 450 mm thick, except that all slabs shall be placed in a single layer. Concrete to

receive other construction shall be screeded to the proper level to avoid excessive shimming or grouting.

3.6.2 Consolidation

Immediately after placing, each layer of concrete shall be consolidated by internal vibrators, except for slabs 100 mm or less. The vibrators shall at all times be adequate in effectiveness and number to properly consolidate the concrete; a spare vibrator shall be kept at the jobsite during all concrete placing operations. The vibrators shall have a frequency of not less than 8000 vibrations per minute, and the head diameter and amplitude shall be appropriate for the concrete mixture being placed. Vibrators shall be inserted vertically at uniform spacing over the area of placement. The distance between insertions shall be approximately 1-1/2 times the radius of action of the vibrator so that the area being vibrated will overlap the adjacent just-vibrated area by a few centimeters. The vibrator shall penetrate rapidly to the bottom of the layer and at least 150 mm into the preceding layer if there is such. Vibrator shall be held stationary until the concrete is consolidated and then withdrawn slowly. The use of form vibrators must be specifically approved. Vibrators shall not be used to transport concrete within the forms. Slabs 100 mm and less in thickness shall be consolidated by properly designed vibrating screeds.

3.6.3 Cold Weather Requirements

Special protection measures, approved by the Contracting Officer, shall be used if freezing temperatures are anticipated before the expiration of the specified curing period. The ambient temperature of the air where concrete is to be placed and the temperature of surfaces to receive concrete shall be not less than 5 degrees C. The temperature of the concrete when placed shall be not less than 10 degrees C nor more than 25 degrees C. Heating of the mixing water or aggregates will be required to regulate the concrete placing temperature. Materials entering the mixer shall be free from ice, snow, or frozen lumps. Salt, chemicals or other materials shall not be incorporated in the concrete to prevent freezing. Upon written approval, a chemical admixture conforming to ASTM C 494 Type C or E may be used, however, no admixtures containing more than trace amounts of chloride shall be used.

3.6.4 Warm Weather Requirements

The temperature of the concrete placed during warm weather shall not exceed 30 degrees C except where an approved retarder is used. The mixing water and/or aggregates shall be cooled, if necessary, to maintain a satisfactory placing temperature. In no case shall the placing temperature exceed 32 degrees C.

3.7 CONSTRUCTION JOINTS

Construction joints shall be located as indicated or approved. Where concrete work is interrupted by weather, end of work shift or other similar type of delay, location and type of construction joint shall be subject to approval of the Contracting Officer. Unless otherwise indicated and except for slabs on grade, reinforcing steel shall extend through construction joints. Concrete columns, walls, or piers shall be in place at least 2 hours, or until the concrete is no longer plastic, before placing concrete for beams, girders, or slabs thereon. In walls having door window openings, lifts shall terminate at the top and bottom of the opening. Other lifts shall terminate at such levels as to conform to structural requirements or architectural details. Where horizontal construction joints are required, a

strip of 25 mm square-edge lumber, bevelled and oiled to facilitate removal, shall be tacked to the inside of the forms at the construction joint. Concrete shall be placed to a point 25 mm above the underside of the strip. The strip shall be removed 1 hour after the concrete has been placed, and any irregularities in the joint line shall be leveled off with a wood float, and all laitance shall be removed. Prior to placing additional concrete, horizontal construction joints shall be prepared as specified in paragraph "PREPARATIONS OF SURFACES." For requirements covering construction joints in slabs on grade see Section 03250 JOINTS IN SLABS ON GRADE AND WATERSTOPS.

3.8 FINISHING CONCRETE

3.8.1 Formed Surfaces

3.8.1.1 Repair of Surface Defects

Surface defects shall be repaired within 24 hours after the removal of forms. Honeycombed and other defective areas shall be cut back to solid concrete or to a depth of not less than 25 mm, whichever is greater. Fins exceeding 7.5 mm in height shall be chipped or rubbed off. Concrete surfaces shall be left with the texture imparted by the forms used. Edges shall be cut perpendicular to the surface of the concrete. The prepared areas shall be dampened and brush-coated with neat cement grout. The repair shall be made using mortar consisting of not more than 1 part cement to 2-1/2 parts sand. The mixed mortar shall be allowed to stand to stiffen (approximately 45 minutes), during which time the mortar shall be intermittently remixed without the addition of water. After the mortar has attained the stiffest consistency that will permit placing, the patching mix shall be thoroughly tamped into place by means approved by the Contracting Officer and finished slightly higher than the surrounding surface. The cement used in the patching mortar shall be a blend of job cement and white cement proportioned to produce a finished repair surface matching, after curing, the color of adjacent surfaces. Holes left after the removal of form ties shall be cleaned and filled with patching mortar. Holes left by the removal of tie rods shall be reamed and filled by dry-packing. Repaired surfaces shall be cured as required for adjacent surfaces. The temperature of concrete, mortar patching material, and ambient air shall be above 10 degrees C while making repairs and during the curing period. Concrete with defects which affect the strength of the member or with excessive honeycombs will be rejected, or the defects shall be corrected as directed.

3.8.2 Unformed Surfaces

In cold weather, the air temperature in areas where concrete is being finished shall not be less than 10 degrees C. In hot windy weather when the rate of evaporation of surface moisture, as determined by methodology presented in ACI 305R, may reasonably be expected to exceed 1 kilogram per square meter per hour; coverings, windbreaks, or fog sprays shall be provided as necessary to prevent premature setting and drying of the surface. The dusting of surfaces with dry materials or the addition of water during finishing will not be permitted. Finished surfaces shall be plane, with no deviation greater than 8 millimeters when tested with a 3.05 m (10-foot) straightedge. Finished surfaces which have been shored shall be checked for surface tolerance after shoring has been removed. Surfaces shall be pitched to drains.

3.8.2.1 Float Finish

Slabs to receive a steel trowel finish or broom finish shall be given a float finish. Screeding shall be followedimmediately by darbying or bull

floating before bleeding water is present, to bring the surface to a true, even plane. After the concrete has stiffened to permit the operation and the water sheen has disappeared, it shall be wood floated. Lightweight concrete or concrete that portrays stickiness shall be finished with a magnesium float in lieu of a wood float, and left free of ridges and other projections.

3.8.2.2 Trowel Finish

Slabs shall be given a trowel finish immediately following floating. Surfaces shall be trowelled to produce smooth, dense slabs free from blemishes including trowel marks. In lieu of hand finishing, an approved power finishing machine may be used in accordance with the directions of the machine manufacturer. A final hard steel troweling shall be done by hand.

3.8.2.3 Broom Finish

After floating, slabs exposed to weather shall be lightly trowelled, and then broomed with a fiber-bristle brush in a direction transverse to that of the main traffic.

3.9 CURING AND PROTECTION

3.9.1 General

All concrete shall be cured by an approved method for the period of time given below:

Concrete with Type III cement	3 days
Concrete with Type I, or II	7 days
Concrete with Type I, or II cement blended with pozzolan	7 days

Immediately after placement, concrete shall be protected from premature drying extremes in temperatures, rapid temperature change, mechanical injury and injury from rain and flowing water. Air and forms in contact with concrete shall be maintained at a temperature above 10 degrees C for the first 3 days and at a temperature above 0 degrees C for the remainder of the specified curing period. Exhaust fumes from combustion heating units shall be vented to the outside of the enclosure and heaters and ducts shall be placed and directed so as not to cause areas of overheating and drying of concrete surfaces or to create fire hazards. All materials and equipment needed for adequate curing and protection shall be available and at the site prior to placing concrete. No fire or excessive heat shall be permitted near or in direct contact with the concrete at any time. Curing shall be accomplished by any of the following methods, or combination thereof, as approved.

3.9.2 Moist Curing

Concrete to be moist-cured shall be maintained continuously wet for the entire curing period. If water or curing materials used stains or discolors concrete surfaces which are to be permanently exposed, the concrete surfaces shall be cleaned. When wooden forms are left in place during curing, they shall be kept wet at all times. If the forms are removed before the end of the curing period, curing shall be carried out as on unformed surfaces, using suitable materials. Horizontal surfaces shall be cured by ponding, by covering with a 50 mm minimum thickness of continuously saturated sand, or by covering with waterproof paper, polyethylene sheet, polyethylene-coated burlap or saturated burlap.

3.9.3 Membrane Curing

Membrane curing shall not be used on surfaces that are to receive any subsequent treatment depending on adhesion or bonding to the concrete; except a styrene acrylate or chlorinated rubber compound meeting CRD C-300 requirements may be used for surfaces which are to be painted or are to receive bituminous roofing or waterproofing, or floors that are to receive adhesive applications of resilient flooring. The curing compound selected shall be compatible with any subsequent paint, roofing, waterproofing or flooring specified. Curing compound shall be applied to formed surfaces immediately after the forms are removed and prior to any patching or other surface treatment except the cleaning of loose sand, mortar, and debris from the surface. .Surfaces shall be thoroughly moistened with water and the curing compound shall be applied to slab surfaces as soon as the bleeding water has disappeared, with the tops of joints being temporarily sealed to prevent entry of the compound and to prevent moisture loss during the curing period. Compound shall be applied in a one-coat continuous operation by mechanical spraying equipment, at a uniform coverage of 5 square meters per liter. Concrete surfaces which have been subjected to rainfall within 3 hours after curing compound has been applied shall be resprayed by the method and at the coverage specified. Surfaces coated with curing compound shall be kept free of foot and vehicular traffic, and from other sources of abrasion and contamination during the curing period.

3.10 SETTING BASE PLATES AND BEARING PLATES

Concrete and metal surfaces in contact with grout shall be clean and free of oil and grease, and concrete surfaces in contact with grout shall be damp and free of laitance when grout is placed.

3.10.1 Nonshrink Grout

Nonshrink grout shall be mixed and placed in accordance with material manufacturer's written recommendations. Forms of wood or other suitable material shall be used to retain the grout. The grout shall be placed quickly and continuously, completely filling the space without segregation or bleeding of the mix.

3.10.2 Treatment of Exposed Surfaces

For metal-oxidizing nonshrink grout, exposed surfaces shall be cut back 25 mm and immediately covered with a parget coat of mortar consisting of 1 part portland cement and 2-1/2 parts fine aggregate by weight, with sufficient water to make a plastic mixture. The parge coat shall have a smooth finish. For other mortars or grouts, exposed surfaces shall be left untreated. Curing shall comply with paragraph "CURING AND PROTECTION."

END OF SECTION

SECTION 04200

MASONRY

PART 1 GENERAL

1.1 SUMMARY (NOT APPLICABLE)

1.2 REFERENCES

The publications listed below form a part of this specification to the extent referenced. The publications are referred to in the text by basic designation only.

AMERICAN SOCIETY FOR TESTING AND MATERIALS (ASTM)

ASTM A 615/A 615M	(Rev C, 1995) Deformed and Plain Billet-Steel Bars for Concrete Reinforcement
ASTM C 39	(1994) Compressive Strength of Cylindrical Concrete Specimens
ASTM C 67	(1994) Sampling and Testing Brick and Structural Clay Tile
ASTM C 73	(1995) Calcium Silicate Face Brick (Sand-Lime Brick)
ASTM C 90	(1995) Load-Bearing Concrete Masonry Units
ASTM C 140	(1975; Rev A, 1995) Sampling and Testing Concrete Masonry Units
ASTM C 150	(1995) Portland Cement
ASTM C 270	(1988; Rev A, 1995) Mortar for Unit Masonry
ASTM C 476	(1995) Grout for Masonry
ASTM C 494	(1992) Chemical Admixtures for Concrete
ASTM C 516	(1980; Rev 1990) Vermiculite Loose Fill Thermal Insulation
ASTM C 549	(1981; Rev 1995) Perlite Loose Fill Insulation
ASTM C 578	(1995) Rigid Cellular Polystyrene Thermal Insulation
ASTM C 652	(1997) Standard Specification for Hollow Brick (Hollow Masonry Units Made from Clay or Shale)
ASTM C 672	(1992) Standard Test Method for Scaling Resistance of Concrete Surfaces Exposed to Deicing Chemicals

ASTM C 780	(1994) Preconstruction and Construction Evaluation of Mortars for Plain and Reinforced Unit Masonry
ASTM D 1056	(1991) Flexible Cellular Materials - Sponge or Expanded Rubber
ASTM D 1667	(1976; Rev 1990) Flexible Cellular Materials - Vinyl Chloride Polymers and Copolymers (Closed-Cell Foam)
ASTM D 2000	(1995) Rubber Products in Automotive Applications (SAE Recommended Practice J200)
ASTM D 2287	(1992) Nonrigid Vinyl Chloride Polymer and Copolymer Molding and Extrusion Compounds

FEDERAL SPECIFICATIONS (FS)

FS HH-I-1972/GEN	(Basic; Am 1) Insulation Board, Thermal, Faced, Polyurethane or Polyisocyanurate

1.3 SUBMITTALS

Government approval is required for submittals with a "GA" designation; submittals having an "FIO" designation are for information only. The following shall be submitted in accordance with SECTION 01300 SUBMITTAL PROCEDURES:

SD-01 Data

Clay or Shale Brick; GA. Insulation; GA.

Manufacturer's descriptive data.

SD-04 Drawings

Masonry Work; GA.

Drawings including plans, elevations, and details of wall reinforcement; details of reinforcing bars at corners and wall intersections; offsets; tops, bottoms, and ends of walls; control and expansion joints; and wall openings. Bar splice locations shall be shown. Bent bars shall be identified on a bending diagram and shall be referenced and located on the drawings. Wall dimensions, bar clearances, and wall openings greater than one masonry unit in area shall be shown. No approval will be given to the shop drawings until the Contractor certifies that all openings, including those for mechanical and electrical service, are shown. If, during construction, additional masonry openings are required, the approved shop drawings shall be resubmitted with the additional openings shown along with the proposed changes. Location of these additional openings shall be clearly highlighted. The minimum scale for wall elevations shall be 6.25 mm per 300 mm (1/4 inch per foot). Reinforcement bending details shall conform to the requirements of ACI SP-66.

SD-08 Statements

Cold Weather Installation; GA.

Cold weather construction procedures.

SD-09 Reports

Efflorescence Test; GA. Fire-rated CMU; GA.

Test reports from an approved independent laboratory. Test reports on a previously tested material shall be certified as the same as that proposed for use in this project.

Special Inspection; GA.

Copies of masonry inspector reports.

SD-13 Certificates

Clay or Shale Brick; FI0. Concrete Masonry Units (CMU); FIO. Control Joint Keys; FIO. Anchors, Ties, and Bar Positioners; FIO. Expansion-Joint Materials; FIO. Joint Reinforcement; FIO. Reinforcing Steel Bars and Rods; FIO. Insulation; FIO. Precast Concrete Items; FIO. Mortar Admixtures; FIO. Grout Admixtures; FIO.

Certificates of compliance stating that the materials meet the specified requirements.

Insulation; FIO.

Certificate attesting that the polyurethane or polyisocyanurate insulation furnished for the project contains recovered material, and showing an estimated percent of such recovered material.

SD-14 Samples

Concrete Masonry Units (CMU); GA. Precast Concrete Items; GA. Clay or Shale Brick; GA.

Color samples of three stretcher units and one unit for each type of special shape. Units shall show the full range of color and texture.

Anchors, Ties, and Bar Positioners; GA.

Two of each type used.

Expansion-Joint Material; GA.

One piece of each type used.

Joint Reinforcement; GA.

One piece of each type used, including corner and wall intersection pieces, showing at least two cross wires.

Insulation; GA.

One piece of board type insulation, not less than 500 mm by 600 mm (16 inches by 24 inches) in size, containing the label indicating the rated permeance and R-values.

Portable Panel; GA.

One panel of clay or shale brick, 600 mm by 600 mm (2 feet by 2 feet), containing approximately 24 brick facings to establish range of color and texture.

1.4 SAMPLE PANEL

After the material samples are approved, and prior to starting masonry work, a sample panel shall be built on the project site where directed. Sample panel shall not be built in or be part of the structure. Panels containing ceramic glazed structural clay facing units or prefaced concrete masonry units will not be required to be constructed. Panel shall be L-Shaped at least 2400 mm (8 ft) long by 1200 mm (4 ft) 1800 mm (6 ft) high in one direction. Panel shall include masonry bonded corner and a bond beam corner if required in the project. Panels for reinforced masonry shall contain a 600 mm (2 ft) square opening at least 600 mm (2 ft) from foundation corners, edges and control joints. Panel shall be of typical wall thickness for the construction represented. Panel shall show color range, texture, bond, mortar joints including tooling, anchors, reinforcement, wall ties, grouting, flashing, insulation, parging, expansion joints, control joints, weep holes, and cleaning of masonry as required in the work. Where composite-wall construction is required, the Contractor shall demonstrate and receive approval of the method that will be used to provide collar joints completely filled with mortar and to provide bond between brick facing and masonry backup. Where cavity construction is required, the Contractor shall demonstrate for approval, the method of bringing wythes up together or separately, with insulation and ties as specified, and temporary provision to keep cavity clear of mortar droppings. Erection of permanent masonry work will not be permitted until the sample panel is approved. The approved sample panel shall be used as a standard of workmanship required. Sample panel shall be protected from construction operations and shall not be removed until the masonry work has been completed. The completed sample panel shall demonstrate the masonry sealer application, safety procedures, surface finish, and appearance.

1.5 TECHNICAL SERVICE FOR MASONRY SEALER

The service of a technical representative of the sealer manufacturer shall be obtained to oversee surface preparation, and all aspects of material handling, mixing, application, finishing and curing until in the opinion of the Contracting Officer all aspects of the application are adequately controlled.

1.6 DELIVERY, HANDLING, AND STORAGE

Materials shall be delivered, handled, and stored in a manner to avoid chipping, breakage, and contract with soil or contaminating material. Concrete masonry units shall conform to the moisture content as specified in ASTM C 90 when delivered to the jobsite. Units shall be stored off the ground and protected from inclement weather. In addition, glazed, glass and prefaced units shall be stored with finish surfaces covered. Anchors, ties, and joint reinforcement shall be stored in a dry location. Reinforcing bars shall be kept free of loose scale and rust. Cementitious materials shall be delivered in unopened containers plainly marked and labeled with manufacturer's names and brands. Cementitious materials shall be stored in dry, weathertight enclosures or covers. Sand shall be stored in a manner to prevent contamination. The masonry sealer shall be stored in accordance with the manufacturer's recommendations.

PART 2 PRODUCTS

2.1 CLAY OR SHALE BRICK

Clay or shale brick shall conform to ASTM C 652, selected for color range indicated by the approved sample. Grade SW shall be used for below grade work where bricks will be in contact with earth and for the first six exterior courses above grade all exterior work. Grade SW or MW shall be used in other brickwork. Clay or brick shall pass the efflorescence test specified in paragraph titled: EFFLORESCENCE TESTS.

Brick size shall be modular in size required to complete the work indicated. Color and texture shall be as indicated on the Drawings. Brick shall conform to ASTM C 73, Grade SW, selected for color range of the approved sample.

2.2 CONCRETE MASONRY UNITS

Concrete masonry units shall conform to ASTM C 90, Type I, Grade N-I medium weight for load-bearing units. Units shall be modular in size and shall include closer, jamb header, lintel, and bond-beam units, and special shapes and sizes required to complete the work indicated.

2.3 CONCRETE MASONRY UNITS USED IN FIRE-RATED ASSEMBLIES

Concrete masonry units used in fire-rated assemblies, in addition to the requirements specified for concrete masonry units, shall be of minimum equivalent thickness for the fire rating and corresponding type of aggregates indicated in TABLE 1. Units containing more than one of the aggregates listed in the table, will be rated on the aggregate requiring the greater minimum equivalent thickness to produce the required fire rating.

Table 1
Minimum Equivalent Thickness in mm for Fire Rating

Aggregate Type:	Fire Rating:		
	4 hours	3 hours	2 hours
Pumice	120	103	77
Expanded slag	128	108	85
Expanded clay, shale, or slate	146	123	95
Limestone, scoria, cinders or unexpanded slag	151	128	103
Calcareous gravel	159	136	108
Siliceous gravel	172	146	115

Minimum equivalent thickness shall equal net volume as determined in conformance with ASTM C 140 divided by the product of the actual length and height of the face shell of the unit in mm. Where walls are to receive plaster, to be faced with brick, or otherwise form an assembly; the thickness of other material in the assembly will be included in determining the equivalent thickness.

2.4 MORTAR

Mortar shall conform to ASTM C 270, Type S, except as otherwise specified. Mortar mix shall be based on laboratory-proportioned and tested mix. Laboratory testing of mortar shall be in accordance with the preconstruction

evaluation of mortar section of ASTM C 780. Mortar mix shall be such that the mortar will develop a minimum laboratory compressive strength of 12.4 MPa (1800 psi) at 28 days. Cement shall be of one brand and conform to ASTM C 150 including the low alkali requirement listed in table I. Aggregates shall be from one source. Accelerating admixture, if used, shall be noncorrosive and chloride free conforming to ASTM C 494, Type C. No calcium chloride or antifreeze agents shall be used. Mortar coloring shall be added to the mortar used for exposed masonry surfaces to produce a uniform color matchingas specified by Architect. Mortar coloring shall not exceed 3 percent of the weight of cement for carbon black and 10 percent of the weight of cement for all other pigments.

2.5 GROUT

Grout unless otherwise specified, shall conform to the requirements of ASTM C 476. The cement for the grout shall conform to ASTM C 150 including the low alkali requirement listed in table I. Grout shall be laboratory proportioned for a 13.8 MPa (2000 psi) mix when tested in accordance with paragraph "STRENGTH TESTS OF GROUT." Grout slump shall be between 200 and 250 mm (8 and 10 inches). Except as otherwise specified, fine grout shall be used to fill spaces where the smallest dimension is 50 mm (2 inches) or less. Coarse grout shall be used to fill spaces where the smallest dimension is greater than 50 mm (2 inches).

2.6 REINFORCING BARS

Reinforcing bars shall be 415 Mpa (Grade 60) steel conforming to ASTM A 615. Size shall be as shown. Centering clips or caging devices shall be formed from not lighter than 9 gauge wire and shall be of a design that will prevent displacement of reinforcing steel during construction. Bending of bars shall be as shown.

2.7 CONTROL JOINT KEYS

Control joint keys shall be factory-fabricated solid section of natural or synthetic rubber or a combination thereof conforming to ASTM D 2000 or polyvinyl chloride conforming to ASTM D 2287. The material shall be resistant to oils and solvents and shall have a durometer hardness of 65 to 75. The key shall be of the width and shape indicated and shall be designed to be used with standard concrete masonry sash units. Shear section shall be 16 mm (5/8 in.) minimum thickness. Control joint masonry units may be furnished in lieu of the sash units and filler specified.

2.8 EXPANSION-JOINT MATERIALS

Bellows or U-shaped type shall conform to Section 07600 SHEET METALWORK, GENERAL. Premolded type shall be closed-cell cellular rubber conforming to ASTM D 1056 or closed-cell vinyl or polyvinyl chloride conforming to ASTM D 1667.

2.9 LOOSE INSULATION

Loose insulation shall be loose-fill type or premolded insert type. Loosefill insulation shall be vermiculite conforming to ASTM C 516, Type II; or perlite conforming to ASTM C 549, Type II; or polystyrene granules, approximately 3.2 mm (1/8 inch) diameter, produced by granulating polystyrene board conforming to ASTM C 578. Premolded inserts shall be manufactured of polystyrene conforming to ASTM C 578. Inserts shall be installed in concrete masonry units conforming to ASTM C 90 at the concrete

masonry unit manufacturing plant. Total thickness of each insert shall be not less than 32 mm (1-1/4 in.).

2.10 BOARD-TYPE INSULATION

Board-type insulation shall be polystyrene conforming to ASTM C 578; polyurethane or polyisocyanurate conforming to FS HH-I-1972/GEN. Faced insulation shall have either aluminum foil or asphalt or asphalt impregnated felt on both sides of board. Insulation thickness shall be sufficient to provide an "R" value as indicated on the Drawings. Insulation adhesive shall be specifically prepared to adhere the insulation to be used to the masonry with no deleterious effect on the insulation.

2.11 FLASHING

Flashing shall conform to the requirements in Section 07600 SHEET METALWORK, GENERAL.

2.12~~11~~ MASONRY SEALER

The masonry sealer shall be a silane or siloxane based material, in an isopropanol, alcohol, or water carrier. The sealer shall be a low viscosity, clear, nonstaining, penetrating material specifically formulated for use on concrete and masonry exterior surfaces. The sealer shall not stain or alter the surface appearance or texture. The sealer shall contain at least 20 percent silane or siloxane solids. The sealer shall chemically bond with the masonry forming a hydrophobic surface which is not a barrier to water vapor, and will provide a highly effective barrier to liquid water and water borne contaminants. The sealer shall block water absorption of the treated surface, provide a barrier to water, rain and other precipitation, dirt, and air contaminants. The sealer shall improve the freeze/thaw resistance of the treated surfaces, and shall be tested for freeze/thaw durability in accordance with ASTM C 672, and shall have a rating of NO SCALING after 50 test cycles. The masonry sealer shall be certified by the manufacturer as conforming to the specified requirements, and as being suitable for the intended application.

2.13~~8~~ PRECAST CONCRETE ITEMS

Trim, lintels, copings, splashblocks and door sills shall be factory-made units from a plant regularly engaged in producing precast concrete units. Unless otherwise indicated, concrete shall be 28 MPa (4000 psi) minimum conforming to Section 03300 CAST-IN-PLACE STRUCTURAL CONCRETE using 13 mm (1/2 inch) 1/2 inch to No. 4 nominal-size coarse aggregate, and minimum reinforcement shall be the reinforcement required for handling of the units. Clearance of 20 mm (3/4 inch) shall be maintained between reinforcement and faces of units. Unless precast-concrete items have been subjected during manufacture to saturated-steam pressure of at least 827 kPa (120 psi) for at least 5 hours, the items, after casting, shall be either damp-cured for 24 hours or steam-cured and shall then be aged under cover for 28 days or longer. Cast-concrete members weighing over 35 kg (80 pounds) shall have built-in loops of galvanized wire or other approved provisions for lifting and anchoring. Units shall have beds and joints at right angles to the face, with sharp true arises and shall be cast with drip grooves on the underside where units overhang walls. Exposed-to-view surfaces shall be free of surface voids, spalls, cracks, and chipped or broken edges. Precast units exposed-to-view shall be of uniform appearance and color. Unless otherwise specified, units shall have a smooth dense finish. Prior to use, each item shall be wetted and inspected for

crazing. Items showing evidence of dusting, spalling, crazing, or having surfaces treated with a protective coating will be rejected.

2.13~~8~~.1 Copings

Copings shall be cast with washes.

PART 3 EXECUTION

3.1 GENERAL REQUIREMENTS

Wall sections, types of construction, and dimensions shall be as shown. Masonry shall be laid in running bond, unless otherwise indicated, and vertical joints shall be kept plumb. Units being laid and surfaces to receive units shall be free of water film and frost. Units shall be laid in a nonfurrowed full bed of mortar, beveled and sloped toward the center of the wythe on which the mortar was placed. Units shall be shoved into place so that the vertical joints are tight. Vertical joints of brick and the vertical face shells of concrete masonry units, except where indicated at control and expansion joints, shall be completely filled with mortar. Units that have been disturbed after the mortar has stiffened shall be removed, cleaned and relaid with fresh mortar. Fins will be permitted to protrude up to 12.5 mm (1/2 in.) into the space between the facing wythe and the backup wall; means shall be provided to prevent mortar from dropping into the space below. Chases and raked-out joints shall be kept free from mortar and other debris. Space around metal door frames and other built-in items shall be solidly filled with mortar as each course is laid. Faces of units in finished areas shall be free from chipped edges or other imperfections detracting from the appearance of the finish work. In double wythe construction, the inner wythe may be brought up not more than 400 mm (16 inches) ahead of the outer wythe. All exterior concrete, mortar, and masonry surfaces shall be treated with masonry sealer as specified herein, unless otherwise directed.

3.1.1 Surface Preparation

Surfaces on which masonry is to be laid shall be cleaned of laitance and other foreign material and slightly roughened to provide a surface texture with a depth of at least 3.2 mm (1/8 inch). Following completion of masonry construction, all exterior surfaces shall be cleaned by approved methods to remove all surface deposits, efflorescence, stains, dirt and debris, oils and other surface contaminants which would interfere with or reduce the effectiveness of the masonry sealer. The masonry surface shall conform to the sealer manufacturer's recommendations, and shall be completely free of frost or ice, shall be above 15 degrees C, and dry for at least 7 days prior to application of the sealer, except as otherwise approved or directed. The masonry surfaces and ambient temperatures shall be withinthe sealer manufacturer's recommended recommended application and curing temperature range, except as otherwise specified or directed, and that the application shall be performed between 15 July and 15 September, and the ambient day time temperature shall be above 25 degrees F for at least 7 days prior to application. The masonry sealer shall not be applied during periods of rain or other precipitation, or if rain or precipitation is expected to occur prior to completion of the sealer, curing period. The masonry sealer shall not be applied for at least 7 days following periods of rain or other precipitation, unless otherwise approved.

3.1.2 Hot Weather Masonry Construction

Masonry erected when the ambient air has a temperature of more than 37 degrees C in the shade and has a relative humidity of less than 50 percent shall be protected from direct exposure to wind and sun during installation and for 48 hours after installation.

3.1.3 Cold Weather Masonry Construction

Temperatures of masonry units shall not be less than 5 degrees C when laid and the temperature of the mortar and grout used shall be between 5 degrees C and 50 degrees C. When the ambient temperature is 0 degrees C or less, masonry work under construction shall be protected and maintained at a temperature greater than 0 degrees C during installation and for a period of 24 48 hours after installation. The proposed method of maintaining the temperature within the specified range shall be submitted for approval prior to implementation.

3.1.4 Tolerances

Except for work constructed of ceramic glazed structural clay facing units or prefaced concrete masonry units, masonry units shall be laid plumb, level and true to line units within the tolerances specified in TABLE 2; and all corners shall be square unless otherwise indicated.

TABLE 2

Variation from plumb	
In adjacent units	3 mm
In 3 meters	7.5 mm
In 6 meters	10 mm
In 12 meters or more	12.5 MM
Variation from level or grades	
In 3 meters	3 mm
In 6 meters	7.5 mm
In 12 meters or more	12.5 MM
Variation from linear building lines	
In 6 meters	10 mm
In 12 meters or more	12.5 mm
Variation from cross sectional dimensions of columns and wall	Plus 12.5 mm to minus 7.5 mm

3.2 MIXING OF MORTAR

Mortar shall be mixed in a mechanically operated mortar mixer for at least 3 minutes but not more than 5 minutes. Measurement of ingredients for mortar shall be either by volume or weight. If ingredients are measured by volume, measurement of sand shall be accomplished by the use of a container of known capacity or shovel count based on a container of known capacity. If ingredients are measured by weight, measurement of sand shall be based on the dry weight of sand of 1280 kilograms per cubic meter (80 pcf). Water shall be mixed with the dry ingredients in sufficient amount to provide a workable mixture which will adhere to the vertical surfaces of masonry units. Mortar that has stiffened because of loss of water through

evaporation shall be retempered by adding water to restore the proper consistency and workability; mortar that has reached its initial set or that has not been used within 2 hours shall be discarded.

3.3 CUTTING AND FITTING

Wherever possible, full units shall be used in lieu of cut units. Where cut units are required to accommodate the design, cutting shall be done by masonry mechanics using power masonry saws, except that cutting of units in unexposed work may be accomplished with masonry hammers and chisels. Wet-cut units shall be dried to the same surface-dry appearance as uncut units before being placed in the work. Cut edges shall be clean, true, and sharp. Openings to accommodate pipes, conduits, and other accessories shall be neatly formed so that framing or escutcheonsrequired will completely conceal the cut edges. Cutting of webs of hollow units shall be kept to a minimum. Insofar as practicable, all cutting and fitting shall be accomplished while masonry work is being erected.

3.4 CLAY OR SHALE BRICK

When being laid, brick shall have suction sufficient to hold the mortar and to absorb water from the mortar, but shall be damp enough to allow the mortar to remain in a plastic state to permit the brick to be leveled and plumbed immediately after being laid without destroying bond. Brick with frogging shall be laid with the frog side down and the better or face side exposed to view. Brick that is cored, recessed, or otherwise deformed shall not be used in sills, treads, soldier courses, or in other areas where deformations will be exposed to view. Sand-lime brick shall be laid as specified for clay or shale brick except sand-lime brick shall not be wetted before laying.

3.5 CONCRETE MASONRY UNITS AND CONCRETE BRICKS

Concrete masonry units and concrete bricks shall not be wetted before laying. Hollow units shall be laid so as to preserve the vertical continuity of cells that are to be filled with grout. Preinsulated units shall be laid in a manner to ensure insulation integrity and continuity. Except as specified in paragraph "ANCHORAGE AND JOINT REINFORCEMENT," courses shall be masonry bonded at corners. Where indicated, cells shall be filled with grout; or solid units may be used in lieu of filled cells where no vertical reinforcement or anchor embedment is required. Concrete brick shall be incorporated in unexposed work as necessary to fill out masonry sections.

3.6 JOINTING

Joint widths shall be uniform and such that the specified widths are maintained throughout. Joints in concealed masonry surfaces and joints at top of electrical boxes in wet areas shall be cut flush with the masonry surfaces. Joints indicated to be caulked shall be raked a depth of 20 mm. Interior control joints shall be raked to a depth of 7.5 mm. All other joints shall be tooled slightly concave. Tooling shall be accomplished on all joints when mortar is thumbprint hard and in a manner that will compress and seal the mortar joint and produce joints of straight and true lines free of tool marks. The vertical joints shall be towled first, followed by the horizontal joint.

3.6.1 Concrete Masonry Unit Joints

Joints in concrete masonry unit construction shall be 10 mm wide.

3.6.2 Brick Joints

Joints in brick construction shall be of thickness equal to the difference between the actual and nominal dimensions of the brick in either height or length, but in no case shall the joints be less than 7.5 mm nor more than 12.5 mm.

3.7 ANCHORAGE AND JOINT REINFORCEMENT

Spacing of reinforcement and type and spacing of anchors shall be as indicated. Reinforcement shall be continuous except at expansion or control joints.

3.8 REINFORCING STEEL

Reinforcing steel shall be cleaned of loose or flaky rust and scale, grease, mortar, or other coating which would tend to reduce bonding of the grout to steel. Steel shall be in place at the time of grouting. The minimum clear distance between bars and masonry units shall be 12.5 mm; and between parallel bars, the minimum clear distance shall be one bar diameter. Reinforcement shall be held in place with centering clips or caging devices. Vertical bars shall be supported near each end and at intermediate intervals not exceeding 192 bar diameters. Horizontal reinforcement shall be set in a full bed of grout. Splices in adjacent bars shall be staggered. Reinforcing bars where spliced shall be lapped a minimum of 40 bar diameters. Welded or mechanical connections shall develop at least 125 percent of the strength of the reinforcement.

3.9 GROUTING

Grout dry ingredients shall be mechanically mixed with sufficient water to bring the mixture to a pouring consistency for at least 5 minutes using the mix design established in the laboratory as specified in paragraph "GROUT." Where high-lift grouting is to be used, cleanout holes shall be provided at the bottom of all cores containing vertical reinforcement in hollow unit masonry. Areas to be grouted shall be cleaned of mortar droppings and other debris and cleanout holes shored or closed with masonry units to contain the grout. Grout shall be placed by hand bucket, concrete hopper, or grout pump. Each lift of grout shall be consolidated after water has left but before plasticity is lost (as soon as a fingerprint can be left in the grout). Consolidation shall be accomplished by mechanically vibrating to insure complete filling of the grout space. When consolidating successive lifts of plastic grout, the tip of the vibrator shall penetrate the preceding lift approximately 250 mm to ensure grout continuity in the wall section. Trowel blade shall not be used for consolidation of grout. If grouting operation is stopped for 1 hour or longer, the grout placement shall be stopped in a manner to provide a 37.5 mm keyway below the top of the masonry unit. Grout holes shall be formed in slab, spandrel beams and other in-place overhead construction. Holes shall be located over spaces to be grouted and shall be in sufficient numbers and spaced as required to insure that the space to be grouted shall be completely filled. If the space to be grouted is larger than two bricks in thickness, the space may be filled with clay or shale bricks or concrete bricks and grout. Bricks so placed shall have not less than 20 mm of grout around each brick. Walls to be grouted shall be adequately shored or braced to prevent shifting, buckling or blowouts. After grouting operations are completed the faces of cleanout holes shall be patched to closely match the surrounding surfaces.

3.9.1 Low-Lift Grout

Hollow-unit masonry to be grouted by the low lift method shall be constructed and grouted in lifts not exceeding 1.25 meters. Double wythe masonry to be grouted by the low-lift method shall be constructed and grouted in lifts not exceeding 200 mm. Slushing with mortar will not be permitted.

3.9.2 High-Lift Grout

If grouting is accomplished by the high-lift method, double wythe masonry shall be allowed to cure at least 72 hours and hollow-unit masonry shall be allowed to cure at least 24 hours before grouting. In double wythe construction, vertical grout barriers shall be built across the grout space to the height of the grout lift. Grout barriers shall not be spaced more than 9 meters apart. Grout shall be placed in lifts not to exceed 1.25 meters in depth. Each lift shall be allowed to set for 10 minutes after initial consolidation of grout before successive lift is placed. The full height of each section of wall shall be grouted in one day.

3.10 BOND BEAMS

Bond beams shall consist of concrete masonry bond beam units reinforced and filled with grout. Structural bond beams shall be continuous through control joints and nonstructural or intermediate bond beams shall be terminated at control joints. Dummy joints shall be formed in structural bond beams at control joints. Where splices are required, reinforcement shall be lapped a minimum of forty bar diameters or 600 mm, whichever is greater. A minimum clearance of 12.5 mm shall be maintained between reinforcement and interior faces of units.

3.11 CONTROL JOINTS

Control joints shall be located and constructed as indicated.

3.12 EXPANSION JOINTS

Expansion joints shall be located where indicated and shall be of the size and detail shown.

3.13 SILLS, LINTELS, AND COPINGS

Sills, lintels, and copings shall be set in a full bed of mortar with faces plumb and true.

3.14 COPINGS

Copings shall be set in a full bed of mortar with faces plumb and true.

3.15 DISCONTINUOUS WORK

When necessary to temporarily discontinue the work, masonry units shall be stepped back for joining when work resumes. Toothing may be resorted to only when specifically approved. Before resuming work, loose mortar shall be removed and the exposed joint shall be thoroughly cleaned. Top of walls exposed to rain or snow shall be covered with nonstaining waterproof covering or membrane when work is not in process. Covering shall extend a minimum of 600 mm down on each side of the wall and be held securely in place.

3.16 BOARD-TYPE INSULATION

Board-type insulation shall be applied directly to the masonry with adhesive. Insulation shall be neatly fitted between obstructions without impaling of insulation on ties or anchors. The insulation shall be applied in parallel courses with joints breaking midway over the course below, shall be applied in moderate contact with adjoining insulation without forcing, and shall be cut to fit neatly against abutting surfaces.

3.17 LOOSE-FILL INSULATION

Loose-fill insulation shall be brought up in not more than 600 mm high sections as the wall is constructed. The insulation shall be allowed to assume its natural density as it is placed.

3.18 STRENGTH TESTS OF GROUT

Two samples of grout and mortar shall be taken in accordance with Section: CONTRACTOR QUALITY CONTROL. The sample shall be prepared by forming on a flat nonabsorbent base a space approximately 75 by 75 by 150 mm or 100 by 100 by 200 mm using masonry units having the same moisture condition as those being laid. The surfaces of the masonry units that will be in contact with the grout shall be lined with a permeable liner to permit water in the grout mixture to pass through the liner into the masonry units. Grout samples shall be placed in the space in two layers and each layer shall be puddled with a 25 by 50 mm puddling stick to eliminate air bubbles. The samples shall be struck off even with the top of the mold, covered, and kept damp for a period of 48 hours. After 48 hours samples shall be removed from the molds and placed in a fog room until tested. Samples shall be tested in accordance with ASTM C 39 by an approved commercial testing laboratory, and shall exhibit a minimum compressive strength of 13,800 kPa at 28 days.

3.19 EFFLORESCENCE TESTS

Efflorescence tests shall be performed by an approved commercial testing laboratory. Sampling for the tests shall be the responsibility of the Contractor.

3.19.1 Clay and Brick Masonry Units

Clay or shale brick masonry units that will be exposed in the finished work shall be sampled and tested for efflorescence in accordance with ASTM C 67. Units must be rated as "no efflorescence" to be accepted for use in the work.

3.19.2 Mortar and Grout

A specimen of each proposed mix, weighing approximately 90 grams, shall be prepared using as little water as possible. While still in the plastic condition and prior to its initial set, each specimen shall be placed in a glass or glazed receptacle, and 120 grams of distilled water shall be mixed with the specimen and stirred thoroughly for 5 minutes. The receptacle shall be of such a size that when the specimen and water are combined in solution, and a masonry unit is placed into it, the solution will have a depth of 12.5 to 25 mm. A masonry unit, which has been tested and found free of efflorescence, shall be placed on end in the solution and the water level maintained at 12.5 to 25 mm with distilled water. After being indoors at temperatures of 25 degrees C plus or minus 7.5 degrees C for 7 days, the masonry unit shall be removed from the solution and air dried for 24 hours. The masonry unit shall be compared with an untreated unit, and if the

difference due to efflorescence is noticeable, when viewed at a distance of 3 meters, the components of the mixes shall be tested in separate receptacles, each containing a masonry unit which has been tested and found free of efflorescence. The cementitious components shall be prepared for testing by thoroughly mixing 30 grams of the cementitious material with 120 grams of distilled water; and the aggregate component shall be prepared for testing by thoroughly mixing 90 grams of the aggregate component with 120 grams of distilled water. Each mixture shall be tested as specified above for the proposed mix. The component causing efflorescence will be rejected.

3.20 CLEANING

Mortar daubs or splashings, before setting or hardening, shall be completely removed from masonry unit surfaces that will be exposed or painted. Before completion of the work, all defects in joints of masonry to be exposed or painted shall be raked out as necessary, filled with mortar, and tooled to match existing joints. Masonry surfaces shall not be cleaned, other than removing excess surface mortar, until mortar in joints has hardened. Initial cleaning following construction of the masonry shall be accomplished with the use of stiff bristle fiber brushes, wooden paddles, wooden scrapers, or other suitable nonmetallic tools after all masonry is complete and grout and mortar has cured for 28 days . Following completion of the building construction and initial cleaning the masonry shall be given a through final cleaning. Masonry surfaces shall be left clean, free of mortar daubs, dirt, stain, and discoloration, including scum from cleaning operations, and with tight mortar joints throughout. Any efflorescence which appears prior to contract completion must be removed.

3.20.1 Concrete-Masonry-Unit and Concrete-Brick Surfaces

Concrete-masonry-unit and concrete-brick surfaces shall be dry-brushed at the end of each day's work after any required pointing has been done.

3.20.2 Clay-Brick or Shale-Brick Surfaces

Before cleaning, the sample masonry panel of similar material shall be examined for discoloration or stain. If the sample panel is discolored or stained, the method of cleaning shall be changed to assure that the masonry surfaces in the structure will not be adversely affected. The exposed masonry surfaces shall be saturated with water and cleaned with a proprietary masonry cleaning agent recommended by the clay products manufacturer and that will not adversely affect the masonry surfaces. Proprietary cleaning agents shall be used in conformance with the cleaning product manufacturer's printed recommendations. Efflorescence or other similar stains shall be removed in conformance with the recommendations of the masonry unit manufacturer.

3.20.3 Ceramic Glazed Structural Clay

Ceramic glazed structural clay facing unit and prefaced concrete masonry unit surfaces shall be cleaned with soap and clean water applied with stiff-fiber brushes and then rinsed with clean water. The use of acid or metal scrapers will not be allowed.

3.21 MASONRY SEALER

The masonry sealer shall be within the manufacturer's recommended temperature range during application. The equipment and methods used in preparing, application, and curing the sealer shall conform to the manufacturer's recommendation, and shall be subject to specific approval. Masonry sealer shall not be used on surfaces that are to receive any subsequent treatment depending on adhesion or bonding to the masonry. The sealer selected shall be compatible with any subsequent paint, roofing, waterproofing or flooring specified. Surfaces of joints shall be protected as required by temporarily covering joint surfaces to prevent entry of the masonry sealer. The sealer shall be applied in a two-coat continuous operation by mechanical spraying equipment, at a uniform coverage in accordance with the manufacturer's printed instructions. The sealer application rate for each coat shall conform to the manufacturer's recommendations, and shall provide a complete uniform coverage at the manufacturer's maximum application rate (i.e. heaviest coating). The time between each coat application shall conform to the manufacturer's recommendation. The surfaces to receive sealer shall be clean, dry, and subject to approval prior to application of the sealer. The sealer shall be prepared, applied, cured and protected in accordance with the manufacturer's recommendations. Surfaces which have been subjected to rainfall, or other precipitation within the manufacturer's recommended curing period after the sealer has been applied shall be resprayed by the method and at the coverage recommended by the manufacturer. Surfaces coated with the masonry sealer shall be kept free of foot and vehicular traffic, and from other sources of abrasion, contamination, and damage during the sealer manufacturer's recommended curing period.

NOTE: Some types of sealers have a low flash point, are highly flammable, and may be explosive or potentially dangerous in the uncured state. Smoking, open flames, and other potential sources of ignition within the manufacturer's recommended clearance distance shall be specifically prohibited. Approved signs and other warning devices shall be the Contractor's responsibility and shall be visible from all directions for the required distance. The Contractor shall assemble and maintain appropriate warning signs and fire safety equipment around storage and handling areas, treated buildings, and buildings to be treated during all sealer handling, application, and curing, and as long after as the hazard potential persists. The Contractor shall be responsible for all safety aspects, material handling and supervision.

END OF SECTION

SECTION 05120

STRUCTURAL STEEL

PART 1 GENERAL

1.1 REFERENCES

The publications listed below form a part of this specification to the extent referenced. The publications are referred to in the text by basic designation only.

AMERICAN INSTITUTE OF STEEL CONSTRUCTION (AISC)

AISC ASD Manual	(1989) Manual of Steel Construction Allowable Stress Design
AISC LRFD Vol I	(1995) Manual of Steel Construction Load & Resistance Factor Design, Vol I: Structural Members, Specifications & Codes
AISC LRFD Vol II	(1995) Manual of Steel Construction Load & Resistance Factor Design, Vol II: Structural Members, Specifications & Codes

AMERICAN SOCIETY FOR TESTING AND MATERIALS (ASTM)

ASTM A 6/A 6M	(1996b) General Requirements for Rolled Structural Steel Bars, Plates, Shapes, and Sheet Piling
ASTM A 36/A 36M	(1996) Carbon Structural Steel
ASTM A 53	(1996) Pipe, Steel, Black and Hot-Dipped, Zinc-Coated, Welded and Seamless
ASTM A 307	(1994) Carbon Steel Bolts and Studs, 60 000 PSI Tensile Strength
ASTM A 325M	(1993) High-Strength Bolts for Structural Steel Joints (Metric)
ASTM A 490M	(1993) High-Strength Steel Bolts, Classes 10.9 and 10.9.3, for Structural Steel Joints (Metric)
ASTM A 500	(1993) Cold-Formed Welded and Seamless Carbon Steel Structural Tubing in Rounds and Shapes
ASTM A 563M	(1993) Carbon and Alloy Steel Nuts (Metric)
ASTM F 436M	(1993) Hardened Steel Washers (Metric)
ASTM F 844	(1990) Washers, Steel, Plain (Flat), Unhardened for General Use

ASTM F 959	(1996) Compressible-Washer-Type Direct Tension Indicators for Use with Structural Fasteners

AMERICAN SOCIETY OF MECHANICAL ENGINEERS (ASME)

ASME B18.21.1	(1994) Lock Washers (Inch Series)
ASME B46.1	(1995) Surface Texture (Surface Roughness, Waviness, and Lay)

AMERICAN WELDING SOCIETY (AWS)

AWS A2.4	(1993) Standard Symbols for Welding, Brazing and Nondestructive Examination
AWS D1.1	(1996) Structural Welding Code - Steel

STEEL STRUCTURES PAINTING COUNCIL (SSPC)

SSPC Paint 25	(1991) Red Iron Oxide, Zinc Oxide, Raw Linseed Oil and Alkyd Primer (without Lead and Chromate Pigments)

1.2 GENERAL REQUIREMENTS

Structural steel fabrication and erection shall be performed by an organization experienced in structural steel work of equivalent magnitude. The Contractor shall be responsible for correctness of detailing, fabrication, and for the correct fitting of structural members. Connections, for any part of the structure not shown on the contract drawings, shall be considered simple shear connections and shall be designed and detailed in accordance with pertinent provisions of AISC ASD Manual and AISC LRFD Vol II. Substitution of sections or modification of connection details will not be accepted unless approved by the Contracting Officer. AISC LRFD Vol I and AISC LRFD Vol II shall govern the work. Welding shall be in accordance with AWS D1.1. High-strength bolting shall be in accordance with AISC LRFD Vol I.

1.3 SUBMITTALS

Government approval is required for submittals with a "GA" designation; submittals having an "FIO" designation are for information only. The following shall be submitted in accordance with Section 01300 SUBMITTAL PROCEDURES:

SD-04 Drawings

Structural Steel System; GA. Structural Connections; GA.

Shop and erection details including members (with their connections) not shown on the contract drawings. Welds shall be indicated by standard welding symbols in accordance with AWS A2.4.

SD-08 Statements

Erection; GA.

Prior to erection, erection plan of the structural steel framing describing all necessary temporary supports, including the sequence of installation and removal.

SD-13 Certificates

Mill Test Reports; FIO.

Certified copies of mill test reports for structural steel, structural bolts, nuts, washers and other related structural steel items, including attesting that the structural steel furnished contains no less than 25 percent recycled scrap steel and meets the requirements specified herein, prior to the installation.

Welder Qualifications; GA.

Certified copies of welder qualifications test records showing qualification in accordance with AWS D1.1.

Fabrication; GA.

A copy of the AISC certificate indicating that the fabrication plant meets the specified structural steelwork category.

SD-14 Samples

High Strength Bolts and Nuts; FIO. Carbon Steel Bolts and Nuts; FIO. Washers; FIO.

Random samples of bolts, nuts, and washers as delivered to the job site if requested, taken in the presence of the Contracting Officer and provided to the Contracting Officer for testing to establish compliance with specified requirements.

1.4 STORAGE

Material shall be stored out of contact with the ground in such manner and location as will minimize deterioration.

PART 2 PRODUCTS

2.1 STRUCTURAL STEEL

2.1.1 Carbon Grade Steel

Carbon grade steel shall conform to ASTM A 36/A 36M.

2.1.2 High-Strength Low-Alloy Steel

High-strength low-alloy steel shall conform to ASTM A 572/A 572M, Grade 50.

2.2 STRUCTURAL TUBING

Structural tubing shall conform to ASTM A 500, Grade B.

2.3 STEEL PIPE

Steel pipe shall conform to ASTM A 53, Type E or Type S, Grade B.

2.4 HIGH STRENGTH BOLTS AND NUTS

High strength bolts shall conform to ASTM A 325M, Type 1, with carbon steel nuts conforming to ASTM A 563M, Grade C and DH, ASTM A 325M, Type 3, with carbon steel nuts conforming to ASTM A 563M, Grade C3.

2.6 CARBON STEEL BOLTS AND NUTS

Carbon steel bolts shall conform to ASTM A 307, Grade A with carbon steel nuts conforming to ASTM A 563M , Grade A.

2.7 NUTS DIMENSIONAL STYLE

Carbon steel nuts shall be Heavy Hex style when used with ASTM A 325M or ASTM A 490M bolts.

2.8 WASHERS

Plain washers shall conform to ASTM F 844. Other types, when required, shall conform to ASME B18.21.1, ASTM F 436M or ASTM F 959.

2.9 PAINT

Paint shall conform to SSPC Paint 25.

PART 3 EXECUTION

3.1 FABRICATION

Fabrication shall be in accordance with the applicable provisions of AISC ASD Manual. Fabrication and assembly shall be done in the shop to the greatest extent possible. The fabricating plant shall be certified under the AISC quality certification program for Category I structural steelwork. Compression joints depending on contact bearing shall have a surface roughness not in excess of 13 micrometer as determined by ASME B46.1, and ends shall be square within the tolerances for milled ends specified in ASTM A 6/A 6M. Structural steelwork, except surfaces of steel to be encased in concrete, surfaces to be field welded, surfaces to be fireproofed, and contact surfaces of friction-type high-strength bolted connections shall be prepared for painting in accordance with AISC ASD Manual and primed with the specified paint.

3.2 ERECTION

Erection of structural steel shall be in accordance with the applicable provisions of AISC LRFD Vol I.

3.2.1 Structural Connections

Anchor bolts and other connections between the structural steel and foundations shall be provided and shall be properly located and built into connecting work. Field welded structural connections shall be completed before load is applied.

3.2.2 Base Plates and Bearing Plates

Column base plates for columns and bearing plates for beams, girders, and similar members shall be provided. Base plates and bearing plates shall be provided with full bearing after the supported members have been plumbed and properly positioned, but prior to placing superimposed loads. Separate

setting plates under column base plates will not be permitted. The area under the plate shall be damp-packed solidly with bedding mortar, except where nonshrink grout is indicated on the drawings. Bedding mortar and grout shall be as specified in Section 03300 CAST-IN-PLACE STRUCTURAL CONCRETE.

3.2.3 Field Priming

After erection, the field bolt heads and nuts, field welds, and any abrasions in the shop coat shall be cleaned and primed with paint of the same quality as that used for the shop coat.

END OF SECTION

SECTION 05210

STEEL JOISTS

PART 1 GENERAL

1.1 REFERENCES

The publications listed below form a part of this specification to the extent referenced. The publications are referred to in the text by basic designation only.

STEEL JOIST INSTITUTE (SJI)

SJI-01	(1994) Standard Specifications Load Tables and Weight Tables for Steel Joists and Joist Girders

1.2 SUBMITTALS

Government approval is required for submittals with a "GA" designation; submittals having an "FIO" designation are for information only. The following shall be submitted in accordance with Section 01300 SUBMITTAL PROCEDURES:

SD-04 Drawings

Steel Joists; GA.

Detail drawings shall include fabrication and erection details, specifications for shop painting, and identification markings of joists and joist girders.

SD-13 Certificates

Steel Joists; GA.

Certificates stating that the steel joists have been designed and manufactured in accordance with SJI-01. Complete engineering design computations may be submitted in lieu of the certification.

1.3 DESCRIPTION

Steel joists are designated on the drawings in accordance with the standard designations of the Steel Joist Institute. Joists of other standard designations or joists with properties other than those shown may be substituted for the joists designated provided the structural properties are equal to or greater than those of the joists shown and provided all other specified requirements are met.

1.4 DELIVERY AND STORAGE

Materials shall be delivered to the site in undamaged condition and stored off the ground in a well drained location, protected from damage, and easily accessible for inspection and handling.

PART 2 PRODUCTS

2.1 OPEN WEB STEEL JOISTS

Open web steel joists shall conform to SJI-01, K-Series. Joists shall be designed to support the loads given in the standard load tables of SJI-01.

2.2 LONGSPAN STEEL JOISTS

Longspan steel joists and deep longspan steel joists shall conform to SJI-01, LH-Series and DLH-Series. Joists designated LH and DLH shall be designed to support the loads given in the applicable standard load tables of SJI-01.

2.3 ACCESSORIES AND FITTINGS

Accessories and fittings, including end supports and bridging, shall be in accordance with the standard specifications under which the members were designed.

2.4 SHOP PAINTING

Joists and accessories shall be shop painted with a rust-inhibiting primer paint. For joists which will be finish painted under Section 09900 PAINTING, GENERAL, the primer paint shall be limited to a primer which is compatible with the specified finish paint.

PART 3 EXECUTION

3.1 ERECTION

Installation of joists shall be in accordance with the standard specification under which the member was produced. Joists shall be handled in a manner to avoid damage. Damaged joists shall be removed from the site, except when field repair is approved and such repairs are satisfactorily made in accordance with the manufacturer's recommendations. Joists shall be accurately set, and end anchorage shall be in accordance with the standard specification under which the joists were produced. For spans over 12 m through 18 m one row of bridging nearest midspan shall be bolted diagonal bridging; for spans over 18 m bolted diagonal bridging shall be used instead of welded horizontal bridging. Joist bridging and anchoring shall be secured in place prior to the application of any construction loads. Any temporary loads shall be distributed so that the carrying capacity of any joist is not exceeded. Loads shall not be applied to bridging during construction or in the completed work. Abraded, corroded, and field welded areas shall be cleaned and touched up with the same type of paint used in the shop painting.

3.2 BEARING PLATES

Bearing plates shall be provided with full bearing after the supporting members have been plumbed and properly positioned, but prior to placing superimposed loads. The area under the plate shall be damp-packed solidly with bedding mortar, except where nonshrink grout is indicated on the drawings. Bedding mortar and grout shall be as specified in Section 03300 CAST-IN-PLACE STRUCTURAL CONCRETE.

END OF SECTION

SECTION 05300

STEEL DECKING

NOTE: The 40 mm metal deck (vertical) (shown in Drawing Sheets A601 through A606), which is in the wall cavity, uses the same specification (05300) as the roof deck. Interior line panel inside the Simulator Bay uses specification 07413.

PART 1 GENERAL

1.1 REFERENCES

The publications listed below form a part of this specification to the extent referenced. The publications are referred to in the text by basic designation only.

AMERICAN IRON AND STEEL INSTITUTE (AISI)

AISI-01	(1986; Addenda 1989) Cold-Formed Steel Design Manual

AMERICAN SOCIETY FOR TESTING AND MATERIALS (ASTM)

ASTM A 611	(1994) Steel, Sheet, Carbon, Cold-Rolled, Structural Quality
ASTM A 653	(1995) Steel Sheet, Zinc-Coated (Galvanized) or Zinc-Iron Alloy coated (Galvannealed) by the Hot-Dip Process
ASTM A 780	(1993a) Repair of Damaged and Uncoated Areas of Hot-Dipped Galvanized Coatings
ASTM A 792	(1995) Steel Sheet, 55% Aluminum-Zinc Alloy-Coated by the Hot-Dip Process, General Requirements
AWS D1.3	(1989) Structural Welding Code - Sheet Steel

STEEL DECK INSTITUTE (SDI)

SDI-02	(1987; Amended 1991) Diaphragm Design Manual
SDI Pub No 28	(1995) Design Manual for Composite Decks, Form Decks, Roof Decks, and Cellular Metal Floor Deck with Electrical Distribution

STEEL STRUCTURES PAINTING COUNCIL (SSPC)

SSPC Paint 20	(1991) Zinc-Rich Primers (Type I - Inorganic and Type II - Organic)

1.2 SUBMITTALS

Government approval is required for submittals with a "GA" designation; submittals having an "FIO" designation are for information only. The following shall be submitted in accordance with Section 01300 SUBMITTAL PROCEDURES:

SD-01 Data

Deck Units; GA.

Design computations for the structural properties of the deck units or SDI certification that the units are designed in accordance with SDI specifications.

SD-04 Drawings

Deck Units; GA. Accessories; GA.
Attachments; GA. Holes and Openings; GA.

Drawings shall include type, configuration, structural properties, location, and necessary details of deck units, accessories, and supporting members; size and location of holes to be cut and reinforcement to be provided; location and sequence of welded or fastener connections; and the manufacturer's erection instructions.

SD-13 Certificates

Deck Units; GA. Attachments; GA.

Manufacturer's certificates attesting that the decking material meets the specified requirements. Manufacturer's certificate attesting that the operators are authorized to use the low-velocity piston tool.

SD-18 Statements

Attachments; GA.

Prior to welding operations, copies of qualified procedures and lists of names and identification symbols of qualified welders and welding operators.

1.3 DELIVERY, STORAGE, AND HANDLING

Deck units shall be delivered to the site in a dry and undamaged condition, stored off the ground with one end elevated, and stored under a weathertight covering permitting good air circulation. Finish of deck units shall be maintained at all times by using touch-up paint whenever necessary to prevent the formation of rust.

PART 2 PRODUCTS

2.1 DECK UNITS

Deck units shall conform to SDI Pub No 28. Panels of maximum possible lengths shall be used to minimize end laps. Fabricate deck units in lengths to span 3 or more supports with flush, telescoped, or nested 50 mm laps at ends, and interlocking, or nested side laps, unless otherwise indicated. Deck with cross-sectional configuration differing from the units indicated may be used, provided that the properties of the proposed units, determined in accordance with AISI-01, are equal to or greater than the properties of the units indicated and that the material will fit the space provided without requiring revisions to adjacent materials or systems.

2.1.1 Roof Deck

Steel deck used in conjunction with insulation and built-up roofing shall conform to ASTM A 653, ASTM A 611 or ASTM A 792. Roof deck units shall be fabricated of the steel design thickness required by the design drawings and shall be zinc-coated in conformance with ASTM A 653, G90 coating class or aluminum-zinc coated in accordance with ASTM A 792 Coating Designation AZ55.

2.2 TOUCH-UP PAINT

Touch-up paint for shop-painted units shall be of the same type used for the shop painting, and touch-up paint for zinc-coated units shall be an approved galvanizing repair paint with a high-zinc dust content. Welds shall be touched-up with paint conforming to SSPC Paint 20 in accordance with ASTM A 780. Finish of deck units and accessories shall be maintained by using touch-up paint whenever necessary to prevent the formation of rust.

2.3 ADJUSTING PLATES

Adjusting plates or segments of deck units shall be provided in locations too narrow to accommodate full-size units. As far as practical, the plates shall be the same thickness and configuration as the deck units.

2.4 CLOSURE PLATES

2.4.1 Closure Plates for Roof Deck

Voids above interior walls shall be closed with sheet metal where shown. Open deck cells at parapets, end walls, eaves, and openings through roofs shall be closed with sheet metal. Sheet metal shall be same thickness as deck units.

2.4.2 Closure Plates for Composite Deck

2.4.2.1 Cover Plates to Close Panels

Cover plates to close panel edge and end conditions and where panels change direction or abut. Butt joints in composite steel deck may receive a tape joint cover.

2.4.2.2 Column Closures to Close Openings

Column closures to close openings between steel deck and structural steel columns.

2.4.2.3 Sheet Metal

Where deck is cut for passage of pipes, ducts, columns, etc., and deck is to remain exposed, provide a neatly cut sheet metal collar to cover edges of deck. Do not cut deck until after installation of supplemental supports.

2.5 ACCESSORIES

The manufacturer's standard accessories shall be furnished as necessary to complete the deck installation. Metal accessories shall be of the same material as the deck and have minimum design thickness as follows: saddles, 1.204 mm (0.0474 inch); welding washers, 1.519 mm (0.0598 inch); cant strip, 0.749 mm (0.0295 inch); other metal accessories, 0.909 mm (0.0358 inch); unless otherwise indicated. Accessories shall include but not be limited to saddles, welding washers, cant strips, butt cover plates, underlapping sleeves, and ridge and valley plates.

PART 3 EXECUTION

3.1 ERECTION

Erection of deck and accessories shall be in accordance with SDI-02 and the approved detail drawings. Damaged deck and accessories including material which is permanently stained or contaminated, with burned holes or deformed shall not be installed. The deck units shall be placed on secure supports, properly adjusted, and aligned at right angles to supports before being permanently secured in place. The deck shall not be filled with concrete, used for storage or as a working platform until the units have been secured in position. Loads shall be distributed by appropriate means to prevent damage during construction and to the completed assembly. The maximum uniform distributed storage load shall not exceed the design live load. There shall be no loads suspended directly from the steel deck.

3.2 ATTACHMENTS

All fasteners shall be installed in accordance with the manufacturer's recommended procedure, except as otherwise specified. The deck units shall be welded with nominal 16 mm diameter puddle welds to supports as indicated on the design drawings and in accordance with requirements of SDI Pub No 28. All welding of steel deck shall be in accordance with AWS D1.3 using methods and electrodes as recommended by the manufacturer of the steel deck being used. Welds shall be made only by operators previously qualified by tests prescribed in AWS D1.3 to perform the type of work required. Welding washers shall not be used at the connections of the deck to supports. Welding washers shall not be used at sidelaps. Holes and similar defects will not be acceptable. All partial or segments of deck units shall be attached to structural supports in accordance with Section 2.5 of SDI-02.

3.3 HOLES AND OPENINGS

All holes and openings required shall be coordinated with the drawings, specifications, and other trades. Holes and openings shall be drilled or cut, reinforced and framed as indicated on the drawings or described in the specifications and as required for rigidity and load capacity. Holes and openings less than 150 mm across require no reinforcement. Holes and openings 150 to 300 mm across shall be reinforced by 1.204 mm (0.0474 inch) thick steel sheet at least 300 mm wider and longer than the opening and be fastened to the steel deck at each corner of the sheet and at a maximum of 150 mm on center. Holes and openings larger than 300 mm shall be reinforced by steel angles installed perpendicular to the steel joists and supported by the adjacent steel joists. Steel angles shall be installed perpendicular to the deck ribs and shall be fastened to the angles perpendicular to the steel joists. Openings must not interfere with seismic members such as chords and drag struts.

3.4 PREPARATION OF FIRE-PROOFED SURFACES

Deck surfaces, both composite and noncomposite, which are to receive sprayed-on fireproofing, shall be galvanized and shall be free of all grease, mill oil, paraffin, dirt, salt, and other contaminants which impair adhesion of the fireproofing. Any required cleaning shall be done prior to steel deck installation using a cleaning method that is compatible with the sprayed-on fireproofing.

END OF SECTION

SECTION 05500

MISCELLANEOUS METAL
07/97

PART 1 GENERAL

1.1 REFERENCES

The publications listed below form a part of this specification to the extent referenced. The publications are referred to in the text by basic designation only.

AMERICAN NATIONAL STANDARDS INSTITUTE (ANSI)

ANSI A14.3	(1992) Ladders - Fixed - Safety Requirements

AMERICAN SOCIETY FOR TESTING AND MATERIALS (ASTM)

ASTM A 53	(1996) Pipe, Steel, Black and Hot-Dipped, Zinc-Coated, Welded and Seamless
ASTM A 123	(1989a) Zinc (Hot-Dip Galvanized) Coatings on Iron and Steel Products
ASTM A 500	(1993) Cold-Formed Welded and Seamless Carbon Steel Structural Tubing in Rounds and Shapes
ASTM A 653	(1996) Steel Sheet, Zinc-Coated (Galvanized) or Zinc-Iron Alloy-Coated (Galvannealed) by the Hot-Dip Process
ASTM A 924	(1996a) Steel Sheet, Metallic-Coated by the Hot-Dip Process

AMERICAN WELDING SOCIETY (AWS)

AWS D1.1	(1994) Structural Welding Code - Steel

NATIONAL ASSOCIATION OF ARCHITECTURAL METAL MANUFACTURERS (NAAMM)

NAAMM MBG 531	(1993) Metal Bar Grating Manual

1.2 SUBMITTALS

Government approval is required for submittals with a "GA" designation; submittals having an "FIO" designation are for information only. The following shall be submitted in accordance with Section 01300 SUBMITTAL PROCEDURES:

SD-04 Drawings

Miscellaneous Metal Items; FIO.

Detail drawings indicating material thickness, type, grade, and class; dimensions; and construction details. Drawings shall include catalog cuts, erection details, manufacturer's descriptive data and installation instructions, and templates. Detail drawings for the following items: Handrails, catwalks, floor plates, bench supports, and ladders.

1.3 GENERAL REQUIREMENTS

The Contractor shall verify all measurements and shall take all field measurements necessary before fabrication. Welding to or on structural steel shall be in accordance with AWS D1.1. Items specified to be galvanized, when practicable and not indicated otherwise, shall be hot-dip galvanized after fabrication. Galvanizing shall be in accordance with ASTM A 123, ASTM A 653, or ASTM A 924, as applicable. Exposed fastenings shall be compatible materials, shall generally match in color and finish, and shall harmonize with the material to which fastenings are applied. Materials and parts necessary to complete each item, even though such work is not definitely shown or specified, shall be included. Poor matching of holes for fasteners shall be cause for rejection. Fastenings shall be concealed where practicable. Thickness of metal and details of assembly and supports shall provide strength and stiffness. Joints exposed to the weather shall be formed to exclude water.

1.4 DISSIMILAR MATERIALS

Where dissimilar metals are in contact, or where aluminum is in contact with concrete, mortar, masonry, wet or pressure-treated wood, or absorptive materials subject to wetting, the surfaces shall be protected with a coat of bituminous paint or asphalt varnish.

1.5 WORKMANSHIP

Miscellaneous metalwork shall be well formed to shape and size, with sharp lines and angles and true curves. Drilling and punching shall produce clean true lines and surfaces. Welding shall be continuous along the entire area of contact except where tack welding is permitted. Exposed connections of work in place shall not be tack welded. Exposed welds shall be ground smooth. Exposed surfaces of work in place shall have a smooth finish, and unless otherwise approved, exposed riveting shall be flush. Where tight fits are required, joints shall be milled. Corner joints shall be coped or mitered, well formed, and in true alignment. Work shall be accurately set to established lines and elevations and securely fastened in place. Installation shall be in accordance with manufacturer's installation instructions and approved drawings, cuts, and details.

1.6 ANCHORAGE

Anchorage shall be provided where necessary for fastening miscellaneous metal items securely in place. Anchorage not otherwise specified or indicated shall include slotted inserts made to engage with the anchors, expansion shields, and power-driven fasteners when approved for concrete; toggle bolts and through bolts for masonry; machine and carriage bolts for steel; and lag bolts and screws for wood.

1.7 SHOP PAINTING

Surfaces of ferrous metal except galvanized surfaces, shall be cleaned and shop coated with the manufacturer's standard protective coating unless otherwise specified. Surfaces of items to be embedded in concrete shall not be painted. Items to be finish painted shall be prepared according to manufacturer's recommendations or as specified.

PART 2 PRODUCTS

2.1 ACCESS DOORS AND PANELS

Doors and panels shall be flush type unless otherwise indicated. Frames for access doors shall be fabricated of not lighter than 1.52 mm (16 gauge) steel with welded joints and finished with anchorage for securing into construction. Access doors shall be a minimum of 350 by 500 mm and of not lighter than 1.9 mm (14 gauge) steel, with stiffened edges, complete with attachments. Access doors shall be hinged to frame and provided with a flush face, screw driver operated latch. Exposed metal surfaces shall have a shop applied prime coat.

2.2 PIPE GUARDS

Pipe guards shall be heavy duty steel pipe conforming to ASTM A 53, Type E or S, weight STD, black finish.

2.3 DOWNSPOUT BOOTS

Downspout boots shall be cast iron with receiving bells sized to fit downspouts.

2.4 FLOOR GRATINGS AND FRAMES

Carbon steel grating shall be designed in accordance with NAAMM MBG 531 to meet the indicated load requirements. Edges shall be banded with bars 6 mm less in height than bearing bars for grating sizes above 19 mm. Banding bars shall be flush with the top of bearing grating. Frames shall be of welded steel construction finished to match the grating. Floor gratings and frames shall be galvanized after fabrication.

2.5 FLOOR PLATES

Floor plates shall be 6 mm thick, raised thread steel.

2.6 HANDRAILS

Handrails shall be designed to resist a concentrated load of 890 N (200 pounds) in any direction at any point of the top of the rail or 292 Newtons per meter (20 pounds per foot) applied horizontally to top of the rail, whichever is more severe.

2.6.1 Steel Handrails, Including Carbon Steel Inserts

Steel handrails, including inserts in concrete, shall be steel pipe conforming to ASTM A 53 or structural tubing conforming to ASTM A 500, Grade A or B of equivalent strength. Steel railings shall be 40 mm nominal size. Railings shall be shop painted. Pipe collars shall be steel.

a. Joint posts, rail, and corners shall be fabricated by one of the following methods:

(1) Flush type rail fittings of commercial standard, welded and ground smooth with railing splice locks secured with 10 mm hexagonal recessed-head setscrews.

(2) Mitered and welded joints by fitting post to top rail and intermediate rail to post, mitering corners, groove welding joints, and grinding smooth. Railing splices shall be butted and reinforced by a tight fitting interior sleeve not less than 150 mm long.

(3) Railings may be bent at corners in lieu of jointing, provided bends are made in suitable jigs and the pipe is not crushed.

b. Removable sections, toe-boards, and brackets shall be provided as indicated.

2.7 LADDERS

Ladders shall be galvanized steel or aluminum, fixed rail type in accordance with ANSI A14.3.

2.8 MISCELLANEOUS

Miscellaneous plates and shapes for items that do not form a part of the structural steel framework, such as lintels, sill angles, miscellaneous mountings, and frames, shall be provided to complete the work.

2.8.1 Bench Supports

Provide bench supports of size and thickness as indicated on the Drawings. Chrome plate bench supports and accessories.

2.9 STEEL DOOR FRAMES

Steel door frames built from structural shapes shall be neatly mitered and securely welded at the corners with all welds ground smooth. Jambs shall be provided with 50 by 6 by 300 mm bent, adjustable metal anchors spaced not over 760 mm on centers. Provision shall be made to stiffen the top member for all spans over 900 mm. Continuous door stops shall be made of 38 by 16 mm bars.

PART 3 EXECUTION

3.1 GENERAL INSTALLATION REQUIREMENTS

All items shall be installed at the locations shown and according to the manufacturer's recommendations. Items listed below require additional procedures as specified.

3.2 REMOVABLE ACCESS PANELS

A removable access panel not less than 300 by 300 mm shall be installed directly below each valve, flow indicator, damper, or air splitter that is

located above the ceiling, other than an acoustical ceiling, and that would otherwise not be accessible.

3.3 INSTALLATION OF PIPE GUARDS

Pipe guards shall be set vertically in concrete piers. Piers shall be constructed of, and the hollow cores of the pipe filled with, concrete specified in SECTION 03300 CAST-IN-PLACE STRUCTURAL CONCRETE.

3.4 INSTALLATION OF DOWNSPOUT BOOTS

Downspouts shall be secured to building through integral lips with appropriate fasteners.

3.5 ATTACHMENT OF HANDRAILS

Toeboards and brackets shall be installed where indicated. Splices, where required, shall be made at expansion joints. Removable sections shall be installed as indicated.

3.5.1 Installation of Steel Handrails

Installation shall be in pipe sleeves embedded in concrete and filled with molten lead or sulphur with anchorage covered with standard pipe collar pinned to post or in masonry with expansion shields and bolts or toggle bolts. Rail ends shall be secured by steel pipe flanges anchored by expansion shields and bolts.

3.6 DOOR FRAMES

Door frames shall be secured to the floor slab by means of angle clips and expansion bolts. Continuous door stops shall be welded to the frame or tap screwed with countersunk screws at no more than 450 mm centers, assuring in either case full contact with the frame. Any necessary reinforcements shall be made and the frames shall be drilled and tapped as required for hardware.

3.7 TRENCH FRAMES AND COVERS

Trench frames and covers shall finish flush with the floor.

End of Section

SECTION 06100

ROUGH CARPENTRY
09/96

PART 1 GENERAL

1.1 REFERENCES

The publications listed below form a part of this specification to the extent referenced. The publications are referred to in the text by basic designation only.

AMERICAN FOREST AND PAPER ASSOCIATION (AFPA)

AFPA-T901	(1991; Supple 1993; Addenda Apr 1995) National Design Specification for Wood Construction
AFPA T11-WCD1	(1988) Manual for Wood Frame Construction

APA-THE ENGINEERED WOOD ASSOCIATION (APA)

APA E445	(1991; Rev May 1991) Performance Standards and Policies for Structural-Use Panels

AMERICAN SOCIETY FOR TESTING AND MATERIALS (ASTM)

ASTM F 547	(1977; R 1990) Definitions of Terms Relating to Nails for Use with Wood and Wood-Base Materials

AMERICAN WOOD-PRESERVERS' ASSOCIATION (AWPA)

AWPA C2	(1995) Lumber, Timber, Bridge Ties and Mine Ties - Preservative Treatment by Pressure Processes
AWPA C9	(1995) Plywood - Preservative Treatment by Pressure Processes
AWPA M4	(1995) Standard for the Care of Preservative-Treated Wood Products
AWPA P5	(1995) Standards for Waterborne Preservatives

DEPARTMENT OF COMMERCE (DOC)

DOC PS 1	(1983) Construction and Industrial Plywood
DOC PS 2	(1992) Performance Standards for Woo-Based Structural-Use Panels

SOUTHERN PINE INSPECTION BUREAU (SPIB)

SPIB-1001	(1994) Standard Grading Rules for Southern Pine Lumber

WESTERN WOOD PRODUCTS ASSOCIATION (WWPA)

WWPA-01	(1995; Supple Nos. 1, 2, and 3) Western Lumber Grading Rules 95

1.2 SUBMITTALS

Government approval is required for submittals with a "GA" designation; submittals having an "FIO" designation are for information only. The following shall be submitted in accordance with Section 01300 SUBMITTAL PROCEDURES:

SD-13 Certificates

Grading and Marking; FIO.

Manufacturer's certificates (approved by an American Lumber Standards approved agency) attesting that lumber and material not normally grade marked meet the specified requirements. Certificate of Inspection for grade marked material by an American Lumber Standards Committee (ALSC) recognized inspection agency prior to shipment.

1.3 DELIVERY AND STORAGE

Materials shall be delivered to the site in undamaged condition, stored off ground in fully covered, well ventilated areas, and protected from extreme changes in temperature and humidity.

PART 2 PRODUCTS

2.1 LUMBER AND SHEATHING

2.1.1 Grading and Marking

2.1.1.1 Lumber Products

Solid sawn and finger-jointed lumber shall bear an authorized gradestamp or grademark recongnized by ALSC, or an ALSC recognized certification stamp, mark, or hammerbrand. Surfaces that are to be exposed to view shall not bear grademarks, stamps, or any type of identifying mark. Hammer marking will be permitted on timbers when all surfaces will be exposed to view.

2.1.1.2 Plywood and other Sheathing Products

Materials shall bear the grademark or other identifying marks indicating grades of material and rules or standards under which produced, including requirements for qualifications and authority of the inspection organization. Except for plywood and structural-use panels, bundle marking will be permitted in lieu of marking each individual piece. Surfaces that are to be exposed to view shall not bear grademarks or other types of identifying marks.

2.1.2 Sizes

Lumber and material sizes shall conform to requirements of the rules or standards under which produced. Unless otherwise specified, lumber shall be surfaced on four sides. Unless otherwise specified, sizes indicated are nominal sizes, and actual sizes shall be within manufacturing tolerances allowed by the standard under which the product is produced.

2.1.3 Treatment

Exposed areas of treated wood that are cut or drilled after treatment shall receive a field treatment in accordance with AWPA M4. Items of all-heart material of cedar, cypress, or redwood will not require preservative treatment, except when in direct contact with soil. Except as specified for all-heart material of the previously mentioned species, the following items shall be treated:

a. Wood members in contact with or within 455 mm of soil.

b. Wood members in contact with water.

c. Wood members set into concrete regardless of location, including flush-with-deck wood nailers for roofs.

d. Wood members in contact with concrete that is in contact with soil or water or that is exposed to weather.

2.1.3.1 Lumber

Lumber shall be treated in accordance with AWPA C2 with waterborne preservatives listed in AWPA P5 to a retention level as follows:

a. 4 kg per cubic meter (0.25 pcf) intended for above ground use.

2.1.3.2 Plywood

Plywood shall be treated in accordance with AWPA C9 with waterborne preservatives listed in AWPA P5 to a retention level as follows:

a. 4 kg per cubic meter (0.25 pcf) intended for above ground use.

2.1.4 Moisture Content

At the time lumber and other materials are delivered and when installed in the work their moisture content shall be as follows:

a. Treated and Untreated Lumber

100 mm or less, nominal thickness, 19 percent maximum. 125 mm or more, nominal thickness, 23 percent maximum in a 75 mm perimeter of the timber cross-section.

c. Materials Other Than Lumber: In accordance with standard under which product is produced.

2.1.5.1 Plywood

Plywood shall conform to DOC PS 1, APA E445 or DOC PS 2, Grade C-D with exterior glue.

2.1.5.2 Wood

Species and grade shall be in accordance with TABLE I at the end of this section.

2.1.6.1 Blocking

Blocking shall be standard or number 2 grade.

2.2 ACCESSORIES AND NAILS

Markings shall identify both the strength grade and the manufacturer. Accessories and nails shall conform to the following:

2.2.1 Bolts: Lag, Toggle, and Miscellaneous Bolts and Screws

Type, size, and finish best suited for intended use. Finish options include zinc compounds, cadmium, and aluminum paint impregnated finishes.

2.2.2 Nails and Staples

ASTM F 547, size and type best suited for purpose; staples shall be as recommended by the manufacturer of the materials to be joined. For sheathing and subflooring, length of nails shall be sufficient to extend 25 mm into supports. In general, 8-penny or larger nails shall be used for nailing through 25 mm thick lumber and for toe nailing 50 mm thick lumber; 16-penny or larger nails shall be used for nailing through 50 mm thick lumber. Nails used with treated lumber and sheathing shall be galvanized. Nailing shall be in accordance with the recommended nailing schedule contained in AFPA T11-WCD1. Where detailed nailing requirements are not specified, nail size and spacing shall be sufficient to develop an adequate strength for the connection. The connection's strength shall be verified against the nail capacity tables in AFPA-T901. Reasonable judgement backed by experience shall ensure that the designed connection will not cause the wood to split. If a load situation exceeds a reasonable limit for nails, a specialized connector shall be used.

PART 3 EXECUTION

3.1 INSTALLATION OF MISCELLANEOUS WOOD MEMBERS

3.1.1 Blocking

Blocking shall be provided as necessary for application of siding, sheathing, subflooring, wallboard, and other materials or building items, and to provide firestopping. Blocking for firestopping shall ensure a maximum dimension of 2400 mm for any concealed space. Blocking shall be cut to fit between framing members and rigidly nailed thereto.

TABLE I. SPECIES AND GRADE

Grading Rules	Species	Const Standard	No. 2 Comm	No. 2 Board Comm	No. 3 Comm
SPIB-1001					
	Southern Pine		X		
WWPA-01					
	Douglas Fir-Larch	X			
	Hem-Fir	X			
	Idaho White Pine	X			
	Lodgepole Pine			X	
	Ponderosa Pine			X	
	Sugar Pine			X	
	Englemann Spruce			X	
	Douglas Fir South			X	
	Mountain Hemlock			X	
	Subalpine Fir			X	
	Western Cedar			X	

End of Section

SECTION 06200

FINISH CARPENTRY
09/96

PART 1 GENERAL

1.1 REFERENCES

The publications listed below form a part of this specification to the extent referenced. The publications are referred to in the text by basic designation only.

AMERICAN SOCIETY FOR TESTING AND MATERIALS (ASTM)

ASTM D 2898	(1994) Accelerated Weathering of Fire-Retardant-Treated Wood for Fire Testing
ASTM F 547	(1977; R 1990) Definitions of Terms Relating to Nails for Use with Wood and Wood-Base Materials

AMERICAN WOOD-PRESERVERS' ASSOCIATION (AWPA)

AWPA C9	(1995) Plywood - Preservative Treatment by Pressure Processes
AWPA C20	(1993) Structural Lumber Fire-Retardant Pressure Treatment
AWPA C27	(1993) Plywood - Fire-Retardant Pressure Treatment
AWPA P5	(1996) Standards for Waterborne Preservatives

1.2 SUBMITTALS

Government approval is required for submittals with a "GA" designation; submittals having an "FIO" designation are for information only. The following shall be submitted in accordance with Section 01300 SUBMITTAL PROCEDURES:

SD-04 Drawings

Finish Carpentry; FIO.

Drawings showing fabricated items and special mill and woodwork items. Drawings shall indicate materials and details of construction, methods of fastening, erection, and installation.

SD-14 Samples

Moldings; FIO.

Samples shall be of sufficient size to show patterns, color ranges, and types, as applicable, of the material proposed to be used.

1.3 DELIVERY AND STORAGE

Materials shall be delivered to the site in undamaged condition, stored off ground in fully covered, well-ventilated areas, and protected from extreme changes in temperature and humidity.

PART 2 PRODUCTS

2.1 WOOD ITEMS, AND TRIM

The Contractor shall furnish products which optimize design by reducing the amount of wood used (engineered wood), or recycled wood products, and preservatives without arsenic or chromium when the products and methods are competitive in price or directed by the Contracting Officer.

2.1.1 Grading and Marking

Materials shall bear the grademark, stamp or other identifying marks indicating grades of material and rules or standards under which produced. Such identifying marks on a material shall be in accordance with the rule or standard under which the material is produced, including requirements for qualifications and authority of the inspection organization, usage of authorized identification, and information included in the identification. The inspection agency for lumber shall be certified by the Board of Review, American Lumber Standards Committee, to grade the species used. Except for plywood, structural-use panels, and lumber, bundle marking will be permitted in lieu of marking each individual piece. Surfaces that are to be architecturally exposed to view shall not bear grademarks, stamps, or other types of identifying marks.

2.1.2 Sizes and Patterns

Lumber sizes and patterns shall conform to rules or standards under which produced. Unless otherwise specified, lumber shall be surfaced on four sides. Sizes and patterns for materials other than lumber shall conform to requirements of the rules or standards under which produced. Size references, unless otherwise specified, are nominal sizes, and actual sizes shall be within manufacturing tolerances allowed by the standard under which the product is produced.

2.1.3 Moisture Content

The maximum moisture content of untreated trim and wood siding shall be 15 percent at the time of delivery to the jobsite and when installed. Moisture content of all other material shall be in accordance with the standard under which the product is produced.

2.1.4 Preservative Treatment

2.1.4.1 Plywood

Plywood shall be treated in accordance with AWPA C9 with waterborne preservatives listed in AWPA P5 to a retention level as follows:

a. 4 kg per cubic meter (0.25 pcf) intended for above ground use.

2.1.5 Fire-Retardant Treatment

Fire-retardant treated lumber shall be pressure treated in accordance with AWPA C20. Fire-retardant treated plywood shall be pressure treated in accordance with AWPA C27. Material use shall be defined in AWPA C20 and AWPA C27 for Interior Type A and B. Treatment and performance inspection shall be by a qualified independent testing agency that establishes performance ratings. Each piece or bundle of treated material shall bear identification of the testing agency to indicate performance with such rating. Treated materials to be exposed to rain wetting shall be subjected to an accelerated weathering technique in accordance with ASTM D 2898, Method A, prior to being tested for compliance with AWPA C20 or AWPA C27. Items to be treated include: All interior wood mouldings.

2.1.6 Moldings

Moldings shall be of the pattern indicated and shall be of a grade compatible with the finish specified.

2.2 NAILS

Nails shall be the size and type best suited for the purpose and shall conform to ASTM F 547. Nails shall be hot-dip galvanized or aluminum when used on exterior work. For siding, length of nails shall be sufficient to extend 40 mm into supports, including wood sheathing over framing. Screws for use where nailing is impractical shall be size best suited for purpose.

PART 3 EXECUTION

3.1 MOLDING AND INTERIOR TRIM

Molding and interior trim shall be installed straight, plumb, level and with closely fitted joints. Exposed surfaces shall be machine sanded at the mill. Molded work shall be coped at returns and interior angles and mitered at external corners. Intersections of flatwork shall be shouldered to ease any inherent changes in plane. Window and door trim shall be provided in single lengths. Blind nailing shall be used to the extent practicable, and face nailing shall be set and stopped with a nonstaining putty to match the finish applied. Screws shall be used for attachment to metal; setting and stopping of screws shall be of the same quality as required where nails are used.

End of Section

SECTION 06410

PLASTIC LAMINATED FACED CABINETS
12/93

PART 1 GENERAL

1.1 REFERENCES

The publications listed below form a part of this specification to the extent referenced. The publications are referred to in the text by basic designation only.

FEDERAL SPECIFICATION (FED. SPEC.)

FS MMM-A-130B (Rev B, Int. Am. 3) Adhesive, Contact

NATIONAL ELECTRICAL MANUFACTURERS ASSOCIATION (NEMA) STANDARD

NEMA LD 3 (1991) High-Pressure Decorative Laminates

AMERICAN NATIONAL STANDARDS INSTITUTE (ANSI)

ANSI A208.1 Mat Formed Wood Particleboard

1.2 GENERAL

Cabinets shall be Architectural Cabinets, Laminated Clad-Premium grade constructed in conformance with Section 400B of the AWI Architectural Woodwork Quality Standards and with the details shown on the drawings. Construction shall be of the flush overlay type. Shelves shall be adjustable type. Exposed surface of cabinet work shall be laminate covered. Use GP50 (HPDL) laminated on all exterior surfaces, back of doors and shelves. Low pressure melamine on interiors (LPDL) and inside of drawers. Counters shall be provided with watertight sink rim. Cabinets shall be of the indicated configuration. Drawers shall be removable and shall be equipped with position stops to avoid accidental complete withdrawals.

1.3 SUBMITTALS

Government approval is required for submittals with a "GA" designation; submittals having an "FIO" designation are for information only. The following shall be submitted in accordance with Section 01300 SUBMITTAL PROCEDURES.

SD-01 Data

Catalog Data; FIO.

Provide catalog sheet on plastic laminate and cabinet hardware.

SD-04 Drawing

Drawings; FIO.

Drawings showing fabrication details and construction.

SD-13 Certificates

Certificates; FIO.

Certificates shall certify that cabinets are constructed in conformance with AWI Standards.

SD-14 Samples

Plastic Laminates; GA.

Samples of sufficient size to show color range, pattern, type and joints.

PART 2 PRODUCTS

2.1 CONSTRUCTION

2.1.1 Finish

Plastic Laminate Sheet Countertops Design, color, and finish shall be as indicted on the finish schedule.

2.2 HARDWARE

2.2.1 Cabinet Hardware

Hardware shall be as follows: Cabinet Hardware - 652 Finish

Door Hinges	B01602
Self Closing Door Pull	B02011 (wire type)
Drawer Pull	B02011 (wire type)
Drawer Slides	B05051
Shelf Standard	B04071
Shelf Rest	B04081

2.3 MATERIALS

2.3.1 Softwood Lumber

PS 20; graded in accordance with AWI Premium; average moisture content of 8 percent; exposed stiles and rails species birch, paint grade, unless otherwise indicated on the Drawings.

2.3.2 Panel Materials

Countertop and back splash shall be constructed of 18.75 mm exterior grade plywood or 18.75 mm particle board with waterproof glue as indicated on the Drawings. Edging and trim shall consist of plastic laminate cut and fitted to all exposed edges.

2.3.2.1 Softwood Plywood

PS 1, exterior; graded in accordance with AWI, core materials of veneer core.

2.3.2.2 Wood Particleboard

ANSI A208.1; standard, composed of wood chips, medium density, made with water resistant adhesive; of grade to suit application; sanded faces.

2.3.3 Plastic Laminates

Plastic laminate shall conform to NEMA LD 3. Adhesive shall conform to FS MMM-A-130B, Type I. Continuous sheets of longest lengths practicable shall be provided. Joints in surface sheeting shall be tight and flush and held to a practicable minimum. When the countertop and back splash are two separate units, GP50 plastic laminate shall be used. When the countertop and back splash are one unit, PF42 plastic laminate shall be used.

2.3.4 Backer/Liner Sheets

Backer/Liner sheets of high pressure plastic laminate Grade BK20 shall be applied to the reverse side of all core material.

2.4 FABRICATION

2.4.1 Shop Assembly

Shop assemble cabinets for delivery to site in units easily handled and to permit passage through building openings.

2.4.2 Doors and Exposed Edges

Fit shelves, doors, and exposed edges with plastic edging. Use one piece for full length only.

2.4.3 Plastic Laminate Finish Edges

Cap exposed plastic laminate finish edges with plastic trim.

2.4.4 Door and Drawer Fronts

18.75 mm thick; reveal overlay style.

2.4.5 Site Fitting

When necessary to cut and fit on site, provide materials with ample allowance for cutting. Provide trim for scribing and site cutting.

2.4.6 Plastic Laminate

Apply plastic laminate finish in full uninterrupted sheets consistent with manufactured sizes. Fit corners and joints hairline; secure with concealed fasteners. Locate counter butt joints minimum 600 mm from sink cut-outs.

2.4.7 Laminate Backing/Liner Sheet

Apply laminate backing/liner sheet to reverse side of plastic laminate finished surfaces.

2.4.8 Plumbing Fixture Cutouts

Provide cutouts for plumbing fixtures, inserts, and fixtures and fittings as indicated on the Drawings. Verify locations of cutouts from on-site dimensions. Seal cut edges.

PART 3 EXECUTION

3.1 EXAMINATION

3.1.1 Backing and Support Framing

Verify adequacy of backing and support framing.

3.1.2 Rough-In Framing

Verify location and sizes of utility rough-in associated with work of this section.

3.2 INSTALLATION

3.2.1 Setting of Cabinets

Set and secure cabinets in place; rigid, plumb, and level.

3.2.2 Fixture Attachments

Use fixture attachments in concealed locations for wall mounted components.

3.2.3 Joint Fasteners

Use concealed joint fasteners to align and secure adjoining cabinet units and counter tops.

3.2.4 Scribing of Cabinets Abutting Other Componets

Carefully scribe cabinets abutting other components, with maximum gaps of 0.78 mm. Do not use additional overlay trim for this purpose.

3.2.5 Cabinet and Counter Bases

Secure cabinet and counter bases to floor using appropriate angles and anchorages.

3.2.6 Anchorage Devices

Countersink anchorage devices at exposed locations. Conceal with solid wood plugs of species to match surrounding wood or other type of plug to match laminate; finish flush with surrounding surfaces.

3.3 ADJUSTING

Adjust moving or operating parts to function smoothly and correctly.

3.4 CLEANING

Clean cabinets, counters, shelves, hardware, fittings, and fixtures.

End of Section

SECTION 06412

WOOD VENEER FACED CABINETS WITH PLASTIC LAMINATE TOPS
2/98

PART 1 GENERAL

1.1 REFERENCES

The publications listed below form a part of this specification to the extent referenced. The publications are referred to in the text by basic designation only.

FEDERAL SPECIFICATION (FED. SPEC.)

FS MMM-A-130B (Rev B, Int. Am. 3) Adhesive, Contact

NATIONAL ELECTRICAL MANUFACTURERS ASSOCIATION (NEMA) STANDARD

NEMA LD 3 (1991) High-Pressure Decorative Laminates

AMERICAN NATIONAL STANDARDS INSTITUTE (ANSI)

ANSI A208.1 Mat Formed Wood Particleboard

1.2 GENERAL

Cabinets shall be Architectural Cabinets, Premium grade constructed in conformance with Section 400B of the AWI Architectural Woodwork Quality Standards and with the details shown on the drawings. Construction shall be of the flush overlay type. Shelves shall be adjustable type. Exposed surface of cabinet work shall be hardwood veneer covered. Counters shall be provided with watertight sink rim. Cabinets shall be of the indicated configuration. Drawers shall be removable and shall be equipped with position stops to avoid accidental complete withdrawals.

1.3 SUBMITTALS

Government approval is required for submittals with a "GA" designation; submittals having an "FIO" designation are for information only. The following shall be submitted in accordance with Section 01300 SUBMITTAL PROCEDURES:

SD-01 Data

Catalog Data; FIO.

Provide catalog sheet on plastic laminate and cabinet hardware.

SD-04 Drawing

Drawings; FIO.

Drawings showing fabrication details and construction.

SD-13 Certificates

Certificates; FIO.

Certificates shall certify that cabinets are constructed in conformance with AWI Standards.

SD-14 Samples

Wood Veneer; GA. Plastic Laminate; GA.

Samples of sufficient size to show color range, pattern, type and joints.

PART 2 PRODUCTS

2.1 CONSTRUCTION

2.1.1 Finish

Plastic Laminate Sheet Countertops Design, color, and finish shall be as indicted on the finish schedule.

2.2 HARDWARE

2.2.1 Cabinet Hardware

Hardware shall be as follows: Cabinet Hardware - 652 Finish

Door Hinges	B01602
Self Closing Door Pull	B02011 (wire type)
Drawer Pull	B02011 (wire type)
Drawer Slides	B05051
Shelf Standard	B04071
Shelf Rest	B04081

2.3 MATERIALS

2.3.1 Softwood Lumber

PS 20; graded in accordance with AWI Premium; average moisture content of 8 percent; exposed stiles and rails species birch, paint grade, unless otherwise indicated on the Drawings.

2.3.2 Panel Materials

Countertop and back splash shall be constructed of 18.75 mm exterior grade plywood or 18.75 mm particle board with waterproof glue as indicated on the Drawings. Edging and trim shall consist of plastic laminate cut and fitted to all exposed edges.

2.3.2.1 Softwood Plywood

PS 1, exterior; graded in accordance with AWI, core materials of veneer core.

2.3.2.2 Wood Particleboard

ANSI A208.1; standard, composed of wood chips, medium density, made with water resistant adhesive; of grade to suit application; sanded faces.

2.3.2.3 Hardwood Plywood

Graded in accordance with AWI Premium; particleboard core, type of glue recommended for application; red oak face species, plain sliced cut, of quality suitable for transparent finish.

2.3.2.4 Hardwood Lumber

Graded in accordance with AWI Premium; red oak species, plain sawn, maximum moisture content of 11 percent; with plain sawn grain, of quality suitable for transparent finish.

2.3.3 Plastic Laminates

Plastic laminate shall conform to NEMA LD 3. Adhesive shall conform to FS MMM-A-130B, Type I. Continuous sheets of longest lengths practicable shall be provided. Joints in surface sheeting shall be tight and flush and held to a practicable minimum. When the countertop and back splash are two separate units, GP50 plastic laminate shall be used. When the countertop and back splash are one unit, PF42 plastic laminate shall be used.

2.3.4 Solid Plastic for Window Sills~~PLASTIC COUNTERTOPS~~

~~Molded Plastic Countertops~~Solid Plastic for Window Sills: 18.75 mm (3/4 inch) thick similiar to Corai~~a~~n manufactured by E.I. DuPont or equivalent; color shall be pearl gray~~ as indicated on the Drawings~~.

2.3.5 Backer/Liner Sheets

Backer/Liner sheets of high pressure plastic laminate Grade BK20 shall be applied to the reverse side of all core material.

2.4 FABRICATION

2.4.1 Shop Assembly

Shop assemble cabinets for delivery to site in units easily handled and to permit passage through building openings.

2.4.2 Doors and Exposed Edges

Fit shelves, doors, and exposed edges with plastic edging. Use one piece for full length only.

2.4.3 Plastic Laminate Finish Edges

Cap exposed plastic laminate finish edges with plastic trim.

2.4.4 Door and Drawer Fronts

18.75 mm thick; reveal overlay style.

2.4.5 Site Fitting

When necessary to cut and fit on site, provide materials with ample allowance for cutting. Provide trim for scribing and site cutting.

2.4.6 Plastic Laminate

Apply plastic laminate finish in full uninterrupted sheets consistent with manufactured sizes. Fit corners and joints hairline; secure with concealed fasteners. Locate counter butt joints minimum 600 mm from sink cut-outs.

2.4.7 Plumbing Fixture Cutouts

Provide cutouts for plumbing fixtures, inserts, and fixtures and fittings as indicated on the Drawings. Verify locations of cutouts from on-site dimensions. Seal cut edges.

PART 3 EXECUTION

3.1 EXAMINATION

3.1.1 Backing and Support Framing

Verify adequacy of backing and support framing.

3.1.2 Rough-In Framing

Verify location and sizes of utility rough-in associated with work of this section.

3.2 INSTALLATION

3.2.1 Setting of Cabinets

Set and secure cabinets in place; rigid, plumb, and level.

3.2.2 Fixture Attachments

Use fixture attachments in concealed locations for wall mounted components.

3.2.3 Joint Fasteners

Use concealed joint fasteners to align and secure adjoining cabinet units and counter tops.

3.2.4 Scribing of Cabinets Abutting Other Componets

Carefully scribe cabinets abutting other components, with maximum gaps of 18.75 mm. Do not use additional overlay trim for this purpose.

3.2.5 Cabinet and Counter Bases

Secure cabinet and counter bases to floor using appropriate angles and anchorages.

3.2.6 Solid Plastic for Window Sills~~Molded Plastic Countertops~~

Install ~~molded plastic countertops~~ solid surfacing window sills in accordance with manufacturer's instructions.

3.2.7 Anchorage Devices

Countersink anchorage devices at exposed locations. Conceal with solid wood plugs of species to match surrounding wood or other type of plug to match laminate; finish flush with surrounding surfaces.

3.3 ADJUSTING

Adjust moving or operating parts to function smoothly and correctly.

3.4 CLEANING

Clean cabinets, counters, shelves, hardware, fittings, and fixtures.

End of Section

SECTION 07160

BITUMINOUS DAMPPROOFING
12/93

PART 1 GENERAL

1.1 REFERENCES

The publications listed below form a part of this specification to the extent referenced. The publications are referred to in the text by basic designation only.

AMERICAN SOCIETY FOR TESTING AND MATERIALS (ASTM)

ASTM D 41	(1994) Asphalt Primer Used in Roofing, Dampproofing, and Waterproofing
ASTM D 1227	(1987) Emulsified Asphalt Used as a Protective Coating for Roofing
ASTM D 4479	(1993) Asphalt Roof Coatings - Asbestos Free

1.2 SUBMITTALS

Government approval is required for submittals with a "GA" designation; submittals having an "FIO" designation are for information only. The following shall be submitted in accordance with SECTION 01300 SUBMITTAL PROCEDURES:

SD-13 Certificates

Materials; FIO.

Certificates attesting that the materials meet the requirements specified.

1.3 QUALIFICATIONS

Work shall be performed by skilled laborers thoroughly experienced in the type of bituminous dampproofing work specified to meet the requirements of the contract.

1.4 DELIVERY, STORAGE AND HANDLING

Dampproofing materials shall be delivered to the project site in the original sealed containers bearing the name of manufacturer, contents and brand name, and stored in a weathertight enclosure to prevent moisture damage and absorption. Dampproofing materials shall be protected from freezing. Asphalt shall be stored off the ground on pallets, and covered on top and all sides with breathable-type canvas tarpaulins. Plastic sheets cause condensation buildup and therefore shall not be used to cover dampproofing materials. Care shall be taken during storage to avoid separation or settlement of the emulsion components. Damaged or deteriorated materials shall be removed from the project site.

PART 2 PRODUCTS

2.1 EMULSION-BASED ASPHALT DAMPPROOFING

2.1.1 Fibrated Emulsion-Based Asphalt

Fibrated emulsion-based asphalt dampproofing shall be cold-applied type conforming to ASTM D 1227 Type IV, asbestos-free, manufactured of refined asphalt, emulsifiers and selected clay, fibrated with mineral fibers. For spray or brush application, emulsion shall contain a minimum of 59 percent solids by weight, 56 percent solids by volume. For trowel application, emulsion shall contain a minimum of 58 percent solids by weight, 55 percent solids by volume.

2.2 SOLVENT-BASED ASPHALT DAMPPROOFING

2.2.1 Asphaltic Primer

Primer for cold-applied solvent-based asphalt dampproofing shall conform to ASTM D 41, asbestos-free, non-fibrated, manufactured with highly ductile soft asphalts and selected hydrocarbons.

2.2.2 Fibrated Asphalt

Fibrated solvent-based asphalt dampproofing shall be cold-applied type conforming to ASTM D 4479 Type I, asbestos-free, manufactured with selected asphalts, stabilizers, mineral spirits and fibrated with mineral fibers. Solvent-based asphalt shall contain 72 percent solids by weight, 65 percent solids by volume.

PART 3 EXECUTION

3.1 SURFACE PREPARATION

Surfaces scheduled for bituminous dampproofing shall be prepared in accordance with dampproofing manufacturer's recommendations. Surface preparation shall be approved prior to dampproofing application.

3.1.1 Protection of Surrounding Areas

Before starting the dampproofing work, the surrounding areas and surfaces shall be protected from spillage and migration of asphalt onto other work. Drains and conductors shall be protected from clogging with asphalt.

3.1.2 Masonry Surfaces

Surfaces shall be free of oil, grease, dirt, laitance, loose material, frost, debris and other contaminants. Mortar joints shall be flush and free of extraneous mortar and chipped or broken masonry.

3.2 APPLICATION OF BITUMINOUS DAMPPROOFING

3.2.1 Emulsion-Based Asphalt

Emulsion-based asphalt dampproofing work shall not be performed in temperatures below 4 degrees C. Emulsions shall have a smooth and uniform consistency at time of application. Dampproofing materials shall be applied

in accordance with manufacturer's published instructions to produce a smooth uniform dry film of not less than 0.3 mm (12 mils) thick without voids or defects. Dull or porous spots shall be recoated. Dampproofing materials shall seal tightly around pipes and other items projecting through dampproofing. Rates of application shall be as follows:

a. Primer: 0.2 liters per square meter (1/2 gallon per 100 square feet), cold-applied.

b. Fibrated Dampproofing: 0.8 liters per square meter (2 gallons per 100 square feet), cold-applied with spray, brush or trowel.

3.2.2 Solvent-Based Asphalt

Solvent-based asphalt dampproofing work shall not be performed in temperatures below 4 degrees C. Dampproofing materials shall be applied in accordance with manufacturer's published instructions to produce a smooth uniform dry film not less than 0.3 mm (12 mils) thick without voids or defects. Dull or porous spots shall be recoated. Dampproofing materials shall seal tightly around pipes and other items projecting through dampproofing. Rates of application shall be as follows:

a. Primer: 0.4 liters per square meter (1/2 gallon per 200 square feet), cold-applied.

b. Dampproofing Coat: 0.8 liters per square meter (2 gallons per 100 square feet), cold-applied with spray, brush or trowel.

3.3 CLEAN-UP

Surfaces of other work which are stained with dampproofing materials shall be cleaned with a cleaner recommended by dampproofing manufacturer.

3.4 PROTECTION

The completed dampproofing work shall be protected from damage during and after construction.

End of Section

SECTION 07212

MINERAL FIBER BLANKET THERMAL INSULATION
06/93

PART 1 GENERAL

1.1 REFERENCES

The publications listed below form a part of this specification to the extent referenced. The publications are referred to in the text by the basic designation only.

AMERICAN SOCIETY FOR TESTING AND MATERIALS (ASTM)

ASTM C 665	1991 Mineral-Fiber Blanket Thermal Insulation for Light Frame Construction and Manufactured Housing
ASTM C 930	1992 Potential Health and Safety Concerns Associated with Thermal Insulation Materials and Accessories
ASTM D 3833	1988 Water Vapor Transmission of Pressure-Sensitive Tapes
ASTM E 84	1991 (Rev. A) Surface Burning Characteristics of Building Materials

CODE OF FEDERAL REGULATIONS (CFR)

29 CFR 1910.134	Respiratory Protection

1.2 SUBMITTALS

Government approval is required for submittals with a "GA" designation; submittals having an "FIO" designation are for information only. The following shall be submitted in accordance with Section 01300 SUBMITTAL PROCEDURES.

SD-01, Manufacturer's Catalog Data

Blanket insulation; FIO. Pressure sensitive tape; FIO. Accessories; FIO.

Data identifying performance characteristics of insulation material. Data shall include recommended application requirements.

SD-06 Instructions

Application of Insulation; FIO.

Insulation manufacturer's recommendations for the application and installation of insulation.

1.3 DELIVERY, STORAGE, AND HANDLING

1.3.1 Delivery

Deliver materials to site in original sealed wrapping bearing manufacturer's name and brand designation, specification number, type, grade, R-value, and class. Store and handle to protect from damage. Do not allow insulation materials to become wet, soiled, crushed, or covered with ice or snow. Comply with manufacturer's recommendations for handling, storing, and protecting of materials before and during installation.

1.3.2 Storage

Inspect materials delivered to the site for damage; unload and store out of weather in manufacturer's original packaging. Store only in dry locations, not subject to open flames or sparks, and easily accessible for inspection and handling.

1.4 SAFETY PRECAUTIONS

1.4.1 Respirators

Provide installers with dust/mist respirators, training in their use, and protective clothing, all approved by National Institute for Occupational Safety and Health (NIOSH)/Mine Safety and Health Administration (MSHA) in accordance with 29 CFR 1910.134.

1.4.2 Smoking

Do not smoke during installation of blanket thermal insulation.

1.4.3 Other Safety Concerns

Consider other safety concerns and measures as outlined in ASTM C 930.

PART 2 PRODUCTS

2.1 BLANKET INSULATION

ASTM C 665, Type III, blankets with reflective coverings; Class A, membrane-faced surface with a flame spread of 25 or less, except a flame spread rating of 75 or less and a smoke developed rating of 150 or less when tested in accordance with ASTM E 84.

2.1.1 Thermal Resistance Value (R-VALUE)

As indicated on the Drawings.

2.1.2 Recycled Materials

Provide Thermal Insulation containing recycled materials to the extent practicable, provided the material meets all other requirements of this section.

2.1.3 Prohibited Materials

Do not provide materials containing more than one percent of asbestos.

2.2 SOUND ATTENUATION BLANKETS

Paperless, semi-rigid glass fiber mat of thickness shown, conforming to ASTM C665 type I; maximum flame spread/smoke developed classification of 25/50; Fiberglas Noise Barrier Batts as manufactured by Owens-Corning or equivalent. Provide sound attenuation fire blankets with maximum flame spread/fuel contributed/smoke developed classification of 15/0/0 in locations as indicated on the Drawings.

2.3 PRESSURE SENSITIVE TAPE

As recommended by the vapor retarder manufacturer and having a water vapor permeance rating of one perm or less when tested in accordance with ASTM D 3833.

2.4 ACCESSORIES

2.4.1 Adhesive

As recommended by the insulation manufacturer.

2.4.2 Mechanical Fasteners

Corrosion resistant fasteners as recommended by the insulation manufacturer.

PART 3 EXECUTION

3.1 EXISTING CONDITIONS

Before installing insulation, ensure that areas that will be in contact with the insulation are dry and free of projections which could cause voids, compressed insulation, or punctured vapor retarders. If moisture or other conditions are found that do not allow the workmanlike installation of the insulation, do not proceed but notify Contracting Officer of such conditions.

3.2 PREPARATION

3.2.1 Blocking at Attic Vents and Access Doors

Prior to installation of insulation, install permanent blocking to prevent insulation from slipping over, clogging, or restricting air flow through soffit vents at eaves.

3.3 INSTALLATION

3.3.1 Blanket Insulation

Install and handle insulation in accordance with manufacturer's Instructions. Keep material dry and free of extraneous materials. Ensure personal protective clothing and respiratory equipment is used as required. Observe safe work practices.

3.3.1.1 Electrical wiring

Do not install insulation in a manner that would sandwich electrical wiring between two layers of insulation.

3.3.1.2 Continuity of Insulation

Install blanket insulation to butt tightly against adjoining blankets and to studs, rafters, joists, sill plates, headers and any obstructions. Provide continuity and integrity of insulation at corners, wall to ceiling joints, roof, and floor. Avoid creating thermal bridges.

3.3.1.3 Installation at Bridging and Cross Bracing

Insulate at bridging and cross bracing by splitting blanket vertically at center and packing one half into each opening. Butt insulation at bridging and cross bracing; fill in bridged area with loose or scrap insulation.

3.3.1.4 Cold Climate Requirement

Place insulation to the outside of pipes.

3.3.1.5 Insulation Blanket with Affixed Vapor Retarder

Locate vapor retarder as indicated. Do not install blankets with affixed vapor retarders unless so specified. Unless the insulation manufacturer's instructions specifically recommend not to staple the flanges of the vapor retarder facing, secure flanges of vapor retarder at 6-inch intervals flush with face or set in the side of stud. Avoid gaps and bulges in insulation and "fishmouth" in vapor retarders. Overlap both flanges when using face method. Seal joints and edges of vapor retarder with pressure sensitive tape. Stuff pieces of insulation into small cracks between studs and other framing, such as at door and window heads, jambs, and sills. Cover these insulated cracks with vapor retarder material and tape all joints with pressure sensitive tape to provide air and vapor tightness.

3.3.1.6 Sizing of Blankets

Provide only full width blankets when insulating between trusses, joists, or studs. Size width of blankets for a snug fit where trusses, joists or studs are irregularly spaced.

End of Section

SECTION 07214

BOARD AND BLOCK INSULATION
06/96

PART 1 GENERAL

1.1 REFERENCES

The publications listed below form a part of this specification to the extent referenced. The publications are referred to in the text by the basic designation only.

AMERICAN SOCIETY FOR TESTING AND MATERIALS (ASTM)

ASTM C 612	(1993) Mineral Fiber Block and Board Thermal Insulation
ASTM C 930	(1992) Potential Health and Safety Concerns Associated with Thermal Insulation Materials and Accessories
ASTM D 3833M	(1988; R 1993) Water Vapor Transmission of Pressure-Sensitive Tapes (Metric)
ASTM E 84	(1995; Rev. A) Surface Burning Characteristics of Building Materials

CODE OF FEDERAL REGULATIONS (CFR)

29 CFR 1910.134	Respiratory Protection

1.2 SUBMITTALS

Government approval is required for submittals with a "GA" designation; submittals having an "FIO" designation are for information only. The following shall be submitted in accordance with Section 01300 SUBMITTAL PROCEDURES:

SD-01, Data

Block or board insulation; FIO. Pressure sensitive tape; FIO. Accessories; FIO.

SD-06, Instructions

Block or Board Insulation; FIO. Adhesive; FIO.

1.3 DELIVERY, STORAGE, AND HANDLING

1.3.1 Delivery

Deliver materials to the site in original sealed wrapping bearing manufacturer's name and brand designation, specification number, type,

grade, R-value, and class. Store and handle to protect from damage. Do not allow insulation materials to become wet, soiled, crushed, or covered with ice or snow. Comply with manufacturer's recommendations for handling, storing, and protecting of materials before and during installation.

1.3.2 Storage

Inspect materials delivered to the site for damage; unload and store out of weather in manufacturer's original packaging. Store only in dry locations, not subject to open flames or sparks, and easily accessible for inspection and handling.

1.4 SAFETY PRECAUTIONS

1.4.1 Respirators

Provide installers with dust/mist respirators, training in their use, and protective clothing, all approved by National Institute for Occupational Safety and Health (NIOSH)/Mine Safety and Health Administration (MSHA) in accordance with 29 CFR 1910.134.

1.4.2 Other Safety Considerations

Consider safety concerns and measures as outlined in ASTM C 930.

PART 2 PRODUCTS

2.1 BLOCK OR BOARD INSULATION

Provide only thermal insulating materials recommended by manufacturer for type of application indicated. Provide board or block thermal insulation conforming to the following standards and the physical properties listed below:

a. Mineral Fiber Block and Board (semi-rigid): ASTM C 612. Provide semi rigid insulation with foil-reinforced kraft vapor retarder.

2.1.1 Thickness

2 inches (50 mm).

2.1.2 Fire Protection Requirement

a. Flame spread index of 25 or less when tested in accordance with ASTM E 84.

b. Smoke developed index of 50 or less when tested in accordance with ASTM E 84.

2.1.3 Recycled Materials

Provide thermal insulation containing recycled materials to the extent practicable, provided that the material meets all other requirements of this section.

2.1.4 Prohibited Materials

Do not provide materials containing more than one percent of asbestos.

2.2 PRESSURE SENSITIVE TAPE

As recommended by manufacturer of vapor retarder and having a water vapor permeance rating of 5.72 x 10-8 g/Pa.s.m2 or less when tested in accordance with ASTM D 3833M .

2.3 ACCESSORIES

2.3.1 Adhesive

As recommended by insulation manufacturer.

PART 3 EXECUTION

3.1 EXISTING CONDITIONS

Before installing insulation, ensure that all areas that will be in contact with the insulation are dry and free of projections which could cause voids, compressed insulation, or punctured vapor retarders. If installing perimeter or under slab insulation, check that the fill is flat, smooth, dry, and well tamped. If moisture or other conditions are found that do not allow the proper installation of the insulation, do not proceed but notify the Contracting Officer of such conditions.

3.2 INSTALLATION

3.2.1 Insulation Board

Install and handle insulation in accordance with the manufacturer's Installation Instructions. Keep material dry and free of extraneous materials. Observe safe work practices.

3.2.2 Continuity of Insulation

Butt tightly against adjoining boards, and obstructions. Provide continuity and integrity of insulation at corners. Avoid creating any thermal bridges or voids.

3.3 INSTALLATION

3.3.1 Adhesive Attachment

Apply adhesive to wall and completely cover substrait with insulation.

a. As recommended by the insulation manufacturer.

End of Section

SECTION 07240

EXTERIOR INSULATION AND FINISH SYSTEM
06/93

PART 1 GENERAL

1.1 REFERENCES

The publications listed below form a part of this specification to the extent referenced. The publications are referred to in the text by basic designation only.

AMERICAN SOCIETY FOR TESTING AND MATERIALS (ASTM)

ASTM C 67	(1994) Sampling and Testing Brick and Structural Clay Tile
ASTM C 473	(1995) Physical Testing of Gypsum Board Products and Gypsum Lath
ASTM C 578	(1992) Rigid, Cellular Polystyrene Thermal Insulation
ASTM C 920	(1987) Elastomeric Joint Sealants
ASTM C 947	(1989) Flexural Properties of Thin-Section Glass-Fiber-Reinforced Concrete (Using Simple Beam With Third-Point Loading)
ASTM C 948	(1994) Dry and Wet Bulk Density, Water Absorption and Apparent Porosity of Thin Sections of Glass-Fiber-Reinforced Concrete
ASTM C 1149	(1990) Self-Supported Spray-Applied Cellulosic Thermal or Acoustical Insulation, or Both
ASTM D 968	(1993) Abrasion Resistance of Organic Coatings by Falling Abrasive
ASTM D 2394	(1983; R 1993) Simulated Service Testing of Wood and Wood-Base Finish Flooring
ASTM E 72	(1980) Conducting Strength Tests of Panels for Building Construction
ASTM E 84	(1995) Surface Burning Characteristics of Building Materials
ASTM E 96	(1994) Water Vapor Transmission of Materials
ASTM E 136	(1994) Behavior of Materials in a Vertical Tube Furnace at 750 Degrees C

ASTM G 23	(1995) Operating Light-Exposure Apparatus (Carbon-Arc Type) With and Without Water for Exposure of Nonmetallic Materials
ASTM G 53	(1993) Operating Light- and Water-Exposure Apparatus (Fluorescent UV-Condensation Type) For Exposure of Nonmetallic Materials

EIFS INDUSTRY MEMBERS ASSOCIATION (EIMA)

EIMA 101.86	(1992; Rev May 1994) Resistance of Exterior Insulation and Finish Systems to the Effects of Rapid Deformation (Impact)

INTERNATIONAL CONFERENCE OF BUILDING OFFICIALS (ICBO)

ICBO-102S94	(1994) Uniform Building Code Standards: Uniform Building Code, Vol. III

1.2 DESCRIPTION

The exterior insulation and finish system (EIFS) shall be a job-fabricated exterior wall covering consisting of insulation, reinforcing fabric, base coat, finish coat, and accessories. The system shall be the standard product of a manufacturer regularly engaged in furnishing exterior insulation and finish systems and shall be installed by an applicator approved by the system manufacturer. EIFS shall be polymer base, Class PB and shall be color and finish as indicated on the Drawings.

1.3 PERFORMANCE REQUIREMENTS

1.3.1 Test Specimens

Unless otherwise noted, the test specimens shall consist of reinforcement, base coat and finish coat applied in accordance with the manufacturer's printed recommendations to an insulation board common to the system. These test specimens shall be suitably sized for the apparatus used and be allowed to cure for a minimum of 28 days prior to testing.

1.3.1.1 Flame Spread

Flame spread test samples consist of base coat, fabric and finish coat, mounted on a non-combustible substrate. When tested in accordance with ASTM E 84, the samples shall have a flame spread rating of 25 or less.

1.3.1.2 Full Scale Wall Fire Test

Full scale wall fire test specimens shall include the complete system with no less than 100 mm (4 inches) of insulation. Test shall be performed in accordance with ICBO-102S94, Section 17-6. The specimen shall not contribute to significant or horizontal flame spread.

1.3.2 Impact Test

The exterior insulation and finish system shall have been tested in accordance with EIMA 101.86 using a specimen consisting of cured finish system over 25 mm thick insulation with base coat and reinforcing fabric in

a complete assembly typical of the project application. Specimen shall withstand an impact of 43.77-85.54 newton-meters.

1.4 SUBMITTALS

Government approval is required for submittals with a "GA" designation; submittals having an "FIO" designation are for information only. The following shall be submitted in accordance with Section 01300 SUBMITTAL PROCEDURES:

SD-06 Instructions

Exterior Insulation and Finish System; FIO.

Two copies of manufacturer's standard printed instructions for installation of the system. Instructions shall include manufacturer's recommended details for corner treatment, jambs, sills, openings, joints and other special applications.

SD-09 Reports

Exterior Insulation and Finish System; FIO.

Test Reports indicating that the system complies with the specified performance tests. Tests shall be by an approved, independent testing laboratory.

SD-14 Samples

Exterior Insulation and Finish System; FIO.

Two samples of each exterior insulation and finish system. Each sample shall be 300 mm square, minimum, and shall be identical to the proposed installation in thickness, color, texture, insulation and workmanship.

SD-08 Statements

Manufacturer's Approval and License; FIO.

Statement from manufacturer attesting that the applicator is approved and licensed to install the system.

1.5 DELIVERY AND STORAGE

Materials shall be delivered to the jobsite in their original unopened packages, clearly marked with the manufacturer's name, brand name, and description of contents. Storage shall be in accordance with the manufacturer's recommendations in a clean, dry, well-ventilated area. Stored materials shall be protected from sunlight, and kept away from excessive heat. Coating materials which would be damaged by freezing shall be kept at a temperature not less than 4 degrees C. Insulation board shall not be exposed to flame or other ignition sources.

PART 2 PRODUCTS

2.1 EXTERIOR CEMENT BOARD

Exterior cement board shall be a non-combustible exterior grade portland cement product. Board shall be 1220 by 2440 mm (4 by 8 feet) with a minimum 13 mm (1/2 inch) thickness. Boards shall consist of an aggregated portland cement core faced on both surfaces and wrapped on long edges with an embedded polymer-coated glass fiber mesh. Bonding surface shall have rough texture. Exterior cement board shall comply with the following requirements:

Property	Test Method	Requirement
Flexural Strength	ASTM C 947	5 MPa, Min.
Compressive Strength	ASTM D 2394	8.6 MPa, Min.
Crack Resistance	ASTM E 72	No cracking
Non-combustibility	ASTM E 136	Pass
Flame Spread/Smoke	ASTM E 84	5/0 max.
Water Absorption	ASTM C 948	15 percent max.
Fastener Pull Resistance	ASTM C 473	534 N (wet or dry)

2.2 ADHESIVE

Adhesive shall be the manufacturer's standard product, including primer as required, and shall be compatible with the substrate to which the system is applied.

2.3 INSULATION

Insulation shall conform to ASTM C 578, type as recommended by the system manufacturer and shall be compatible with other system components. Insulation shall be aged a minimum of 6 weeks by air drying, or equivalent prior to installation. Insulation shall be a standard product of the manufacturer and shall be factory marked with the manufacturer's name or trade mark, the material specification number, the R-value at 24 degrees C, and thickness. Thickness of insulation shall be based on specified R-value, but no single layer shall be less than 19 mm thick. Boards shall be marked individually. The thermal resistance of insulation in the system shall be not less than the R-value shown on the drawings. Insulation for Class PM and insulation extending below grade shall be restricted to a low water vapor permeability grade of extruded polystyrene (type IV or X).

2.4 BASE COAT

Base coat shall be the manufacturer's standard product and shall be compatible with the finish coat.

2.5 REINFORCING FABRIC

Reinforcing fabric shall be balanced, open weave, glass fiber fabric made from twisted multi-end strands specifically treated for compatibility with the other materials of the system.

2.6 MECHANICAL ANCHORS

Mechanical anchors shall be as recommended by the system manufacturer.

2.7 FINISH COATING

Finish coating shall be manufacturer's standard product, uniform in color and conforming to the following requirements. Specimens for tests shall have been cured for a minimum of 28 days.

TEST	METHOD	RESULTS
Abrasion Resistance	ASTM D 968	500 liters of sand-slight - smoothing no loss of film integrity.
Accelerated weathering Light and water exposure	ASTM G 23 or ASTM G 53	2000 hours. No deterioration
Mildew-fungus resistance	ASTM C 1149	Expose for 28 days at 95 percent RH, 32 degrees C temperature. No growth of mildew or fungus.
Salt spray resistance	ASTM B 117	Withstand 300 hours - No deleterious effects.
Water vapor	ASTM E 96	Not more than 13 grams per square meter an hour.
Absorption-freeze (Pre-weighed 100 mm by 200 mm specimens; 25 mm insulation, faced with finish coat cured and stored in air; tested with edges and back open.)	ASTM C 67 50 Cycles: 20 hrs. at -9 deg. C; 4-hr. thaw in water	After 50 cycles - Total weight gain of not more than 6.2 grams. No checking, splitting, or cracking.

2.8 SEALANT

Sealant shall meet requirements of ASTM C 920, Class 25, and shall be compatible with the finish system. Type, Grade, and Use shall be as recommended by both the sealant manufacturer and the system manufacturer. When required, primer, bond breaker and backstop shall be non-staining, and as recommended by the sealant manufacturer and the system manufacturer.

2.9 ACCESSORIES

Accessories shall conform to the recommendations of the system manufacturer and shall include trim, edging, anchors, sealant and filler rod required for proper installation of the system.

PART 3 EXECUTION

3.1 SURFACE PREPARATION

Surface shall be free of oil, loose materials or protrusions which will interfere with the system installation.

3.2 ENVIRONMENTAL CONDITION

Unless a higher temperature is required by the system manufacturer, the ambient air temperature shall be 4 degrees C or greater and rising at the time of installation of the system and shall be predicted to remain at 4 degrees C or greater for at least 24 hours after installation.

3.3 EXTERIOR CEMENT BOARD

Exterior cement board shall be attached to metal studs with self-tapping wafer-head, corrosion resistant screws, nailed to wood studs, or secured to concrete or masonry with approved fasteners. Screws and nails for application of the board shall be spaced not more than 200 mm on each supporting member, and fasteners into concrete or masonry shall be spaced not more than 300 mm apart horizontally and vertically. Fasteners shall be more closely spaced when required for negative wind load resistance. Edges and ends of boards shall be butted snugly with vertical joints staggered to provide full and even support for the insulation.

3.4 INSULATION BOARD AND REINFORCING FABRIC

Unless otherwise specified by the system manufacturer, insulation boards shall be placed horizontally from a level base line. Vertical joints shall be staggered and insulation boards interlocked at corners. Joints of insulation shall be butted tightly. Surfaces of adjacent insulation boards shall be flush at joints. Joints of insulation shall be offset from substrate joints. Reinforcing glass fabric shall be installed in accordance with the manufacturer's instructions.

3.5 ADHESIVE SYSTEM

Primer (if required by the manufacturer) and adhesive shall be prepared and applied with a stainless steel trowel to substrate in accordance with the manufacturer's instructions. The pattern of the reinforcing fabric shall not be visible. Adhesive used with Class PM must be supplemented with mechanical fasteners. Adhesive shall be used without fasteners only with Class PB system and when recommended by the manufacturer.

3.6 BASE COAT

Base coat shall be mixed in accordance with the manufacturer's instructions and applied to insulated wall surfaces, trowelling the material into the reinforcing fabric in a tight coat and doubling back to provide complete

coverage of the reinforcing fabric, panel joints and fasteners. Base coat may be used to level out surface areas when permitted by the manufacturer.

3.7 FINISH COATING

Finish coating shall be applied and leveled in one operation. Final texture shall be obtained by trowels, floats, or by spray application as necessary to achieve the required finish. Finish surfaces shall be plane, with no deviation greater than 6 mm when tested with a 3 m straightedge.

3.8 SEALANT

Edges of the exterior insulation and finish system shall be sealed at openings as recommended by the system manufacturer.

End of Section

SECTION 07270

FIRESTOPPING
03/93

PART 1 GENERAL

1.1 REFERENCES

The publications listed below form a part of this specification to the extent referenced. The publications are referred to in the text by basic designation only.

AMERICAN SOCIETY FOR TESTING AND MATERIALS (ASTM)

ASTM E 84	(1995a) Surface Burning Characteristics of Building Materials
ASTM E 814	(1994b) Fire Tests of Through-Penetration Fire Stops

UNDERWRITERS LABORATORIES (UL)

UL-05	(1995; Supple) Fire Resistance Directory
UL 723	(1993; Rev Apr 1994) Test for Surface Burning Characteristics of Building Materials
UL 1479	(1994) Fire Tests of Through-Penetration Firestops

1.2 SUBMITTALS

Government approval is required for submittals with a "GA" designation; submittals having an "FIO" designation are for information only. The following shall be submitted in accordance with Section 01300 SUBMITTAL PROCEDURES:

SD-04 Drawings

Firestopping Materials; FIO.

Detail drawings including manufacturer's descriptive data, typical details, installation instructions and the fire-test data and/or report as appropriate for the fire resistance rated construction and location. Submittal shall indicate the firestopping material to be provided for each type of application. When more than 5 penetrations are to receive firestopping, drawings shall indicate location and type of application.

SD-13 Certificates

Firestopping Materials; FIO.

Certificates attesting that firestopping material complies with the specified requirements. The label or listing of the Underwriters

Laboratories will be acceptable evidence. In lieu of the label or listing, a written certificate may be submitted from an approved, nationally recognized testing agency equipped to perform such services, stating that the items have been tested and conform to the specified requirements and testing methods.

Installer Qualifications; FIO.

Certification stating that installer is qualified and trained to install the specified firestopping material.

Inspection; FIO.

Manufacturer's representative certification stating that firestopping work has been inspected and found to be applied according to the manufacturer's recommendations and the specified requirements.

1.3 GENERAL REQUIREMENTS

Firestopping shall consist of furnishing and installing a material or a combination of materials to form an effective barrier against the spread of flame, smoke and gases, and maintain the integrity of fire resistance rated walls, partitions, floors, and ceiling-floor assemblies, including through-penetrations and construction joints. Through-penetrations include the annular space around pipes, tubes, conduit, wires, cables and vents. Construction joints include those used to accommodate expansion, contraction, wind, or seismic movement; firestopping material shall not interfere with the required movement of the joint.

1.4 STORAGE AND DELIVERY

Materials shall be delivered in the original unopened packages or containers showing name of the manufacturer and the brand name. Materials shall be stored off the ground and shall be protected from damage and exposure to elements. Damaged or deteriorated materials shall be removed from the site.

1.5 INSTALLER QUALIFICATIONS

Installer of firestopping material shall be trained by the manufacturer or the manufacturer's representative, and shall have a minimum of 3 years experience in the installation of firestopping of the type specified.

PART 2 PRODUCTS

2.1 FIRESTOPPING MATERIALS

Firestopping materials shall consist of commercially manufactured products complying with the following minimum requirements:

2.1.1 Fire Hazard Classification

Material shall have a flame spread of 25 or less, and a smoke developed rating of 50 or less, when tested in accordance with ASTM E 84 or UL 723. Material shall be an approved firestopping material as listed in UL-05.

2.1.2 Toxicity

Material shall be nontoxic to humans at all stages of application.

2.1.3 Fire Resistance Rating

Firestopping will not be required to have a greater fire resistance rating than that of the assembly in which it is being placed.

2.1.3.1 Through-Penetrations

Firestopping materials for through-penetrations, as described in paragraph GENERAL REQUIREMENTS, shall provide "F" and "T" fire resistance ratings in accordance with ASTM E 814 or UL 1479, except that T Ratings are not required for penetrations smaller than or equal to a 100 mm nominal pipe or 0.01 square meter in overall cross sectional area. Fire resistance ratings shall be the following:

a. Penetrations of Fire Resistance Rated Walls and Partitions: Rating as indicated on the Drawings.

2.1.3.2 Construction Joints and Gaps

Fire resistance ratings of construction joints, as described in paragraph GENERAL REQUIREMENTS, and gaps such as those between floor slabs or roof decks and curtain walls shall be the same as the construction in which they occur.

PART 3 EXECUTION

3.1 PREPARATION

Areas to receive firestopping shall be free of dirt, grease, oil, or loose materials which may affect the fitting or fire resistance of the firestopping system.

3.2 INSTALLATION

Firestopping material shall completely fill void spaces regardless of geometric configuration, subject to tolerance established by the manufacturer. Firestopping for filling floor voids 100 mm or more in any direction shall be capable of supporting the same load as the floor is designed to support or shall be protected by a permanent barrier to prevent loading or traffic in the firestopped area. Firestopping shall be installed in accordance with manufacturer's written instructions. Firestopping shall be provided in the following locations, except in floor slabs on grade:

a. Penetrations of duct, conduit, tubing, cable and pipe through floors and through fire-resistance rated walls, partitions, and ceiling-floor assemblies.

b. Penetrations of vertical shafts such as pipe chases, elevator shafts, and utility chutes.

c. Gaps at the intersection of floor slabs and curtain walls, including inside of hollow curtain walls at the floor slab.

d. Gaps at perimeter of fire-resistance rated walls and partitions, such as between the top of the walls and the bottom of roof decks.

e. Construction joints in floors and fire rated walls and partitions.

f. Other locations where required to maintain fire resistance rating of the construction.

3.3 INSPECTION

Firestopped areas shall not be covered or enclosed until inspection is complete and approved. A manufacturer's representative shall inspect the applications initially to ensure adequate preparations (clean surfaces suitable for application, etc.) and periodically during the work to assure that the completed work has been accomplished according to the manufacturer's written instructions and the specified requirements.

End of Section

SECTION 07413

METAL WALL, CEILING AND SOFFIT PANELS
07/97

PART 1 GENERAL

1.1 REFERENCES

The publications listed below form a part of this specification to the extent referenced. The publications are referred to in the text by basic designation only.

AMERICAN IRON AND STEEL INSTITUTE (AISI)

AISI-01	(1986; Addenda 1989) Cold-Formed Steel Design Manual

AMERICAN SOCIETY FOR TESTING AND MATERIALS (ASTM)

ASTM A 463	(1996a) Steel Sheet, Aluminum-Coated, by the Hot-Dip Process
ASTM A 653	(1996) Steel Sheet, Zinc-Coated (Galvanized) or Zinc-Iron Alloy-Coated (Galvannealed) by the Hot-Dip Process
ASTM A 792	(1995) Steel Sheet, 55% Aluminum-Zinc Alloy-Coated by the Hot-Dip Process
ASTM B 117	(1994) Operating Salt Spray (Fog) Testing Apparatus
ASTM D 522	(1993a) Mandrel Bend Test of Attached Organic Coatings
ASTM D 714	(1987; R 1994) Evaluating Degree of Blistering of Paints
ASTM D 968	(1993) Abrasion Resistance of Organic Coatings by Falling Abrasive
ASTM D 1654	(1992) Evaluation of Painted or Coated Specimens Subjected to Corrosive Environments
ASTM D 2244	(1993) Calculation of Color Differences from Instrumentally Measured Color Coordinates
ASTM D 2247	(1994) Testing Water Resistance of Coatings in 100% Relative Humidity
ASTM D 2794	(1993) Resistance of Organic Coatings to the Effects of Rapid Deformation (Impact)
ASTM D 3359	(1995) Measuring Adhesion by Tape Test

ASTM D 4214	(1989) Evaluating the Degree of Chalking of Exterior Paint Films
ASTM D 4587	(1991) Conducting Tests on Paint and Related Coatings and Materials Using a Fluorescent UV-Condensation Light- and Water- Exposure Apparatus

AMERICAN SOCIETY OF CIVIL ENGINEERS (ASCE)

ASCE 7	(1995) Minimum Design Loads for Buildings and Other Structures

1.2 GENERAL REQUIREMENTS

1.2.1 Design

Criteria, loading combinations, and definitions shall be in accordance with ASCE 7. Maximum calculated fiber stress shall not exceed the allowable value in the AISI or AA manuals; a one third overstress for wind is allowed. Midspan deflection under maximum design loads shall be limited to L/180. Contract drawings show the design wind loads and the extent and general assembly details of the metal siding. Members and connections not shown on the drawings shall be designed by the Contractor. Wall, ceiling and soffit panels and accessories shall be the products of the same manufacturer. Steel siding design shall be in accordance with AISI-01.

1.2.2 Architectural Considerations

Panels profile shall be as shown on the drawings.

1.3 SUBMITTALS

Government approval is required for submittals with a "GA" designation; submittals having an "FIO" designation are for information only. The following shall be submitted in accordance with Section 01300 SUBMITTAL PROCEDURES:

SD-04 Drawings

Wall, Ceiling and Soffit Panels; FIO.

Drawings consisting of catalog cuts, design and erection drawings, shop coating and finishing specifications, and other data as necessary to clearly describe design, materials, sizes, layouts, construction details, fasteners, and erection. Drawings shall be accompanied by engineering design calculations for the siding panels.

SD-13 Certificates

Wall, Ceiling and Soffit Panels; FIO. Installation; FIO. Accessories; FIO.

Certificates attesting that the panels and accessories conform to the requirements specified. Certified laboratory test reports showing that the sheets to be furnished are produced under a continuing quality control program and that a representative sample consisting of not less than 5

pieces has been tested and has met the quality standards specified for factory color finish. Mill certification for structural bolts, siding, and wall liner panels.

SD-14 Samples

Accessories; FIO.

One sample of each type of flashing, trim, closure, cap and similar items. Size shall be sufficient to show construction and configuration.

Wall, Ceiling and Soffit Panels; FIO.

One piece of each type and finish (exterior and interior) to be used, 225 mmlong, full width.

Fasteners; FIO.

Two samples of each type to be used with statement regarding intended use. If so requested, random samples of bolts, nuts, and washers as delivered to the jobsite shall be taken in the presence of the Contracting Officer and provided to the Contracting Officer for testing to establish compliance with specified requirements.

Gaskets and Insulating Compounds; FIO.

Two samples of each type to be used and descriptive data.

Sealant; FIO.

One sample, approximately 0.5 kg, and descriptive data.

1.4 DELIVERY AND STORAGE

Materials shall be delivered to the site in a dry and undamaged condition and stored out of contact with the ground. Materials shall be covered with weathertight coverings and kept dry. Storage accommodations for metal wall, ceiling, and soffit panels shall provide good air circulation and protection from surface staining.

1.5 WARRANTIES

The Contractor shall provide a weather tight warranty for the metal wall, ceiling, and soffit panels for a period of 20 years to include panel assembly, 10 years against the wear of color finish, and 10 years against the corrosion of fasteners caused by ordinary wear and tear by the elements. The warranties shall start upon final acceptance of the work or the date the Government takes possession, whichever is earlier.

PART 2 PRODUCTS

2.1 SIDING

Panels shall be steel and shall have a factory color finish. Length of sheets shall be sufficient to cover the entire height of any unbroken wall surface when length of run is 9 m or less. When length of run exceeds 9 m, each sheet in the run shall extend over two or more spans. Sheets longer

than 9 m may be furnished if approved by the Contracting Officer. Width of sheets with interlocking ribs shall provide not less than 300 mm of coverage in place.

2.1.1 Wall, Ceiling, and Soffit Panels

Panels shall have interlocking ribs for securing adjacent sheets. Panels shall be fastened to framework using concealed fasteners.

2.1.2 Steel Panels

Zinc-coated steel conforming to ASTM A 653; aluminum-zinc alloy coated steel conforming to ASTM A 792, AZ 50 coating; or aluminum-coated steel conforming to ASTM A 463, Type 2, coating designation T2 65. Uncoated wall panels shall be 0.6 mm thick minimum.

2.2 FACTORY COLOR FINISH

Panels shall have a factory applied polyvinylidene fluoride finish on the exposed side. The exterior finish shall consist of a baked-on topcoat with an appropriate prime coat. Color shall match the color indicated on the drawings. The exterior coating shall be a nominal 0.025 mm thickness consisting of a topcoat of not less than 0.018 mm dry film thickness and the paint manufacturer's recommended primer of not less than 0.005 mm thickness. The interior color finish shall consist of a backer coat with a dry film thickness of 0.013 mm . The exterior color finish shall meet the test requirements specified below.

2.2.1 Salt Spray Test

A sample of the sheets shall withstand a salt spray test for a minimum of 1000 hours in accordance with ASTM B 117, including the scribe requirement in the test. Immediately upon removal of the panel from the test, the coating shall receive a rating of not less than 8F, few no. 8 blisters, as determined by ASTM D 714; and a rating of 6, 3 mm failure at scribe, as determined by ASTM D 1654.

2.2.2 Formability Test

When subjected to testing in accordance with ASTM D 522 Method B, 3 mm diameter mandrel, the coating film shall show no evidence of fracturing to the naked eye.

2.2.3 Accelerated Weathering, Chalking Resistance and Color Change

A sample of the sheets shall be tested in accordance with ASTM D 4587. The coating shall withstand the weathering test without cracking, peeling, blistering, loss of adhesion of the protective coating, or corrosion of the base metal. Protective coating that can be readily removed from the base metal with tape in accordance with ASTM D 3359, Test Method B, shall be considered as an area indicating loss of adhesion. Following the accelerated weathering test, the coating shall have a chalk rating not less than No. 8 in accordance with ASTM D 4214 test procedures, and the color change shall not exceed 5 CIE or Hunter Lab color difference (delta E) units in accordance with ASTM D 2244. For sheets required to have a low gloss finish, the chalk rating shall be not less than No. 6 and the color difference shall be not greater than 7 units.

2.2.4 Humidity Test

When subjected to a humidity cabinet test in accordance with ASTM D 2247 for 1000 hours, a scored panel shall show no signs of blistering, cracking, creepage or corrosion.

2.2.5 Impact Resistance

Factory-painted sheet shall withstand direct and reverse impact in accordance with ASTM D 2794 13 mm diameter hemispherical head indenter, equal to 6.7 times the metal thickness in mm, expressed in Newton-meters, with no loss of adhesion.

2.2.6 Abrasion Resistance Test

When subjected to the falling sand test in accordance with ASTM D 968, Method A, the coating system shall withstand a minimum of 50 liters of sand before the appearance of the base metal. The term "appearance of base metal" refers to the metallic coating on steel or the aluminum base metal.

2.3 ACCESSORIES

Flashing, trim, metal closure strips, caps, and similar metal accessories shall be the manufacturer's standard products. Exposed metal accessories shall be finished to match the panels furnished. Molded closure strips shall be bituminous-saturated fiber, closed-cell or solid-cell synthetic rubber or neoprene, or polyvinyl chlorided premolded to match configuration of the panels and shall not absorb or retain water.

2.4 FASTENERS

Fasteners for steel panels shall be zinc-coated steel, aluminum, corrosion resisting steel, or nylon capped steel, type and size specified below or as otherwise approved for the applicable requirements. Fasteners for attaching panels to supports shall provide both tensile and shear strength of not less than 3340 N per fastener. Fasteners for accessories shall be the manufacturer's standard. Exposed wall fasteners shall be color finished or provided with plastic color caps to match the panels. Nonpenetrating fastener system for panels using concealed clips shall be manufacturer's standard for the system provided.

2.4.1 Screws

Screws shall be as recommended by the manufacturer.

2.4.2 End-Welded Studs

Automatic end-welded studs shall be shouldered type with a shank diameter of not less than 5 mm and cap or nut for holding panels against the shoulder.

2.4.3 Explosive Actuated Fasteners

Fasteners for use with explosive actuated tools shall have a shank of not less than 3.68 mm with a shank length of not less than 13 mm for fastening panels to steel and not less than 25 mm for fastening panels to concrete.

2.4.4 Blind Rivets

Blind rivets shall be aluminum with 5 mm nominal diameter shank or stainless steel with 3 mm nominal diameter shank. Rivets shall be threaded stem type if used for other than the fastening of trim. Rivets with hollow stems shall have closed ends.

2.4.5 Bolts

Bolts shall be not less than 6 mm diameter, shouldered or plain shank as required, with proper nuts.

2.5 SEALANT

Sealant shall be an elastomeric type containing no oil or asphalt. Exposed sealant shall be colored to match the applicable building color and shall cure to a rubberlike consistency.

2.6 GASKETS AND INSULATING COMPOUNDS

Gaskets and insulating compounds shall be nonabsorptive and suitable for insulating contact points of incompatible materials. Insulating compounds shall be nonrunning after drying.

PART 3 EXECUTION

3.1 INSTALLATION

Installation shall be in accordance with the manufacturer's erection instructions and drawings. Dissimilar materials which are not compatible when contacting each other shall be insulated from each other by means of gaskets or insulating compounds. Improper or mislocated drill holes shall be plugged with an oversize screw fastener and gasketed washer; however, panels with an excess of such holes or with such holes in critical locations shall not be used. Exposed surfaces and edges shall be kept clean and free from sealant, metal cuttings, hazardous burrs, and other foreign material. Stained, discolored, or damaged sheets shall be removed from the site.

3.1.1 Panels and Accessories

Panels shall be applied with the longitudinal configurations in the vertical position. Accessories shall be fastened into framing members, except as otherwise approved. Closure strips shall be provided as indicated and where necessary to provide weathertight construction.

3.1.1.1 Concealed Fastener Wall Panels

Panels shall be fastened to framing members with concealed fastening clips or other concealed devices standard with the manufacturer. Spacing of fastening clips and fasteners shall be in accordance with the manufacturer's written instructions. Spacing of fasteners and anchor clips along the panel interlocking ribs shall not exceed 300 mm on center except when otherwise approved. Fasteners shall not puncture metal sheets except as approved for flashing, closures, and trim; exposed fasteners shall be installed in straight lines. Interlocking ribs shall be sealed with factory-applied sealant. Joints at accessories shall be sealed.

End of Section

SECTION 07416

STRUCTURAL STANDING SEAM METAL ROOF (SSSMR) SYSTEM
07/97

PART 1 GENERAL

1.1 REFERENCES

The publications listed below form a part of this specification to the extent referenced. The publications are referred to in the text by basic designation only.

AMERICAN INSTITUTE OF STEEL CONSTRUCTION (AISC)

AISC-04	(1989) Specification for Structural Steel Buildings - Allowable Stress Design, Plastic Design

AMERICAN IRON AND STEEL INSTITUTE (AISI)

AISI-01	(1986; Addenda 1989) Cold-Formed Steel Design Manual

AMERICAN SOCIETY FOR TESTING AND MATERIALS (ASTM)

ASTM A 463	(1996a) Steel Sheet, Aluminum-Coated, by the Hot-Dip Process
ASTM A 653	(1996) Steel Sheet, Zinc-Coated (Galvanized) or Zinc-Iron Alloy-Coated (Galvannealed) by the Hot-Dip Process
ASTM A 792	(1995) Steel Sheet, 55% Aluminum-Zinc Alloy-Coated by the Hot-Dip Process
ASTM B 117	(1994) Operating Salt Spray (Fog) Testing Apparatus
ASTM C 518	(1991) Steady-State Heat Flux Measurements and Thermal Transmission Properties by Means of the Heat Flow Meter Apparatus
ASTM C 1289	(1995) Faced Rigid Cellular Polyisocyanurate Thermal Insulation Board
ASTM D 522	(1993a) Mandrel Bend Test of Attached Organic Coatings
ASTM D 714	(1987; R 1994) Evaluating Degree of Blistering of Paints
ASTM D 968	(1993) Abrasion Resistance of Organic Coatings by Falling Abrasive

ASTM D 1308	(1987; R 1993) Effect of Household Chemicals on Clear and Pigmented Organic Finishes
ASTM D 1654	(1992) Evaluation of Painted or Coated Specimens Subjected to Corrosive Environments
ASTM D 2244	(1993) Calculation of Color Differences from Instrumentally Measured Color Coordinates
ASTM D 2247	(1994) Testing Water Resistance of Coatings in 100% Relative Humidity
ASTM D 2794	(1993) Resistance of Organic Coatings to the Effects of Rapid Deformation (Impact)
ASTM D 3359	(1995) Measuring Adhesion by Tape Test
ASTM D 4214	(1989) Evaluating the Degree of Chalking of Exterior Paint Films
ASTM D 4397	(1996) Polyethylene Sheeting for Construction, Industrial, and Agricultural Applications
ASTM D 4587	(1991) Conducting Tests on Paint and Related Coatings and Materials Using a Fluorescent UV-Condensation Light- and Water-Exposure Apparatus
ASTM E 1592	(1995) Structural Performance of Sheet Metal Roof and Siding Systems by Uniform Static Air Pressure Difference

AMERICAN SOCIETY OF CIVIL ENGINEERS (ASCE)

ASCE 7	(1995) Minimum Design Loads for Buildings and Other Structures

1.2 GENERAL REQUIREMENTS

The Contractor shall furnish a manufacturer's standard product which satisfies all requirements contained herein and has been verified by load testing and independent design analyses to meet the specified design requirements.

1.2.1 Manufacturer

The SSSMR system shall be the product of a manufacturer who has been in the practice of manufacturing SSSMR systems for a period of not less than 3 years and has been involved in at least five projects similar in size and complexity to this project.

1.2.2 Installer

The installer shall be certified by the SSSMR system manufacturer to have experience in installing at least three projects that are of comparable size, scope and complexity as this project for the particular roof system

furnished. The installer may be either employed by the manufacturer or be an independent installer.

1.3 DESIGN REQUIREMENTS

The design of the SSSMR system shall be provided by the Contractor as a complete system. Members and connections not indicated on the drawings shall be designed by the Contractor. Roof panels, components, transitions, accessories, and assemblies shall be supplied by the same manufacturer.

1.3.1 Design Criteria

Design criteria shall be in accordance with ASCE 7 unless otherwise specified.

1.3.2 Dead Loads

The dead load shall be the weight of the SSSMR system. Collateral loads such as sprinklers, mechanical and electrical systems, and ceilings shall not be attached to the panels.

1.3.3 Live Loads

1.3.3.1 Concentrated Loads

The panels and anchor clips shall be capable of supporting a 1335 N concentrated load. The concentrated load shall be applied at the panel midspan and will be resisted by a single standing seam metal roof panel assumed to be acting as a beam. The undeformed shape of the panel shall be used to determine the section properties.

1.3.3.2 Uniform Loads

The panels and concealed anchor clips shall be capable of supporting a minimum uniform live load of 960 Pa.

1.3.4 Roof Snow Loads

The design roof snow loads shall be as shown on the contract drawings.

1.3.5 Wind Loads

The design wind uplift pressure for the roof system shall be as shown on the contract drawings. The design uplift force for each connection assembly shall be that pressure given for the area under consideration, multiplied by the tributary load area of the connection assembly. The safety factor listed below shall be applied to the design force and compared against the ultimate capacity. Prying shall be considered when figuring fastener design loads.

a. Single fastener in each connection.....3.0

b. Two or more fasteners in each connection...2.25

1.3.6 Thermal Loads

Roof panels shall be free to move in response to the expansion and contraction forces resulting from a total temperature range of 50 degrees C during the life of the structure.

1.3.7 Framing Members Supporting the SSSMR System

Any additions/revisions to framing members supporting the SSSMR system to accommodate the manufacturer/fabricator's design shall be the Contractor's responsibility and shall be submitted for review and approval. New or revised framing members and their connections shall be designed in accordance with AISC-04 and AISI-01. Maximum deflection under applied live load, snow, or wind load shall not exceed 1/180 of the span length.

1.3.8 Roof Panels Design

Steel panels shall be designed in accordance with AISI-01. The structural section properties used in the design of the panels shall be determined using the unloaded shape of the roof panels. The calculated panel deflection from concentrated loads shall not exceed 1/180 of the span length. The calculated panel deflection under applied live load, snow, or wind load shall not exceed 1/180 times the span length. Deflections shall be based on panels being continuous across three or more supports. Deflection shall be calculated and measured along the major ribs of the panels.

1.3.9 Accessories and Their Fasteners

Accessories and their fasteners shall be capable of resisting the specified design wind uplift forces and shall allow for thermal movement of the roof panel system. Exposed fasteners shall not restrict free movement of the roof panel system resulting from thermal forces. There shall be a minimum of two fasteners per clip. Single fasteners with a minimum diameter of 9 mmwill be allowed when the supporting structural members are prepunched or predrilled.

1.4 PERFORMANCE REQUIREMENTS

The SSSMR shall be tested for wind uplift resistance in accordance with ASTM E 1592; SSSMR systems previously tested and approved by the Corps of Engineers' STANDARD TEST METHOD FOR STRUCTURAL PERFORMANCE OF SSMRS BY UNIFORM STATIC AIR PRESSURE DIFFERENCE may be acceptable. Two tests shall be performed. Test 1 shall simulate the edge condition with one end having crosswise restraint and other end free of crosswise restraint. The maximum span length for the edge condition shall be 750 mm. Test 2 shall simulate the interior condition with both ends free of crosswise restraint. The maximum span length for the interior condition shall be 1.5 m. External reinforcement, such as clamps on the ribs, may shall not be installed to improve uplift resistance. Bolts through seams shall not be installed.

1.5 SUBMITTALS

Government approval is required for submittals with a "GA" designation; submittals having an "FIO" designation are for information only. The following shall be submitted in accordance with Section 01300 SUBMITTAL PROCEDURES:

SD-01 Data

Design Analysis; GA.

Design analysis signed by a Registered Professional Engineer employed by the SSSMR manufacturer. The design analysis shall include a list of the design loads, and complete calculations for the support system (when provided by the Contractor), roofing system and its components; valley designs, gutter/downspout calculations, screw pullout test results, and shall indicate how expected thermal movements are accommodated.

SD-04 Drawings

Structural Standing Seam Metal Roof System; GA.

Metal roofing drawings and specifications and erection drawings; shop coating and finishing specifications; and other data as necessary to clearly describe design, materials, sizes, layouts, standing seam configuration, construction details, provisions for thermal movement, line of panel fixity, fastener sizes and spacings, sealants and erection procedures. Drawings shall reflect the intent of the architectural detailing using the manufacturer's proprietary products and fabricated items as required. The SSSMR system shop drawings shall be provided by the metal roofing manufacturer.

SD-08 Statements

Qualifications; FIO.

Qualifications of the manufacturer and installer.

SD-09 Reports

Test Report for Uplift Resistance of the SSSMR; GA.

The report shall include the following information:

a. Details of the SSSMR system showing the roof panel cross-section with dimensions and thickness.

b. Details of the anchor clip, dimensions, and thickness.

c. Type of fasteners, size, and the number required for each connection.

d. Purlins/subpurlins size and spacing used in the test.

e. Description of the seaming operation including equipment used.

f. Maximum allowable uplift pressures. These pressures are determined from the ultimate load divided by a factor of safety equal to 1.65.

g. Any additional information required to identify the SSSMR system tested.

h. Signature and seal of an independent registered engineer who witnessed the test.

SD-13 Certificates

Structural Standing Seam Metal Roof System; FIO.

a. Certification that the actual thickness of uncoated sheets used in SSSMRS components including roofing panels, subpurlins, and concealed anchor clips complies with specified requirements.

b. Certification that materials used in the installation are mill certified.

c. Previous certification of SSSMR system tested under the Corps of Engineers' Standard Test Method in lieu of ASTM E 1592 testing.

d. Certification that the sheets to be furnished are produced under a continuing quality control program and that a representative sample consisting of not less than three pieces has been tested and has met the quality standards specified for factory color finish.

e. Certification of installer.

f. Warranty certificate. At the completion of the project the Contractor shall furnish signed copies of the 5-year Warranty for Structural Standing Seam Metal Roof (SSSMR) System, a sample copy of which is attached to this section, and the 20-year Manufacturer's Material Warranties.

Insulation; FIO.

Certificate attesting that the polyurethane or polyisocyanurate insulation furnished for the project contains recovered material, and showing an estimated percent of such recovered material.

SD-14 Samples

Accessories; FIO.

One sample of each type of flashing, trim, closure, thermal spacer block, cap and similar items. Size shall be sufficient to show construction and configuration.

Roof Panels; FIO.

One piece of each type to be used, 225 mm long, full width.

Factory Color Finish; FIO.

Three 75 by 125 mm samples of each type and color.

Fasteners; FIO.

Two samples of each type to be used, with statement regarding intended use. If so requested, random samples of bolts, nuts, and washers as delivered to the job site shall be taken in the presence of the Contracting Officer and provided to the Contracting Officer for testing to establish compliance with specified requirements.

Insulation; FIO.

One piece, 300 by 300 mm, of each type and thickness to be used, with a label indicating the rated permeance (if faced) and R-values. The flame spread, and smoke developed rating shall be shown on the label or provided in a letter of certification.

Gaskets and Insulating Compounds; FIO.

Two samples of each type to be used and descriptive data.

Sealant; FIO.

One sample, approximately 0.5 kg, and descriptive data.

Concealed Anchor Clips; FIO.

Two samples of each type used.

Subpurlins; FIO.

One piece, 225 mm long.

EPDM Rubber Boots; FIO.

One piece of each type.

1.6 DELIVERY AND STORAGE

Materials shall be delivered to the site in a dry and undamaged condition and stored out of contact with the ground. Materials shall be covered with weathertight coverings and kept dry. Storage conditions shall provide good air circulation and protection from surface staining.

1.7 WARRANTIES

The SSSMR system shall be warranted as outlined below. Any emergency temporary repairs conducted by the owner shall not negate the warranties.

1.7.1 Contractor's Weathertightness Warranty

The SSSMR system shall be warranted by the Contractor on a no penal sum basis for a period of five years against material and workmanship deficiencies; system deterioration caused by ordinary exposure to the elements and service design loads, water leaks, and wind uplift damage. The SSSMR system covered under this warranty shall include the entire roofing system including, but not limited to, the following: panel seams and joint, all accessories, components and trim; penetrations such as vents, curbs, and skylights; interior or exterior gutters and downspouts; eaves, ridge, hip, valley, rake, gable, wall, or other roof system flashings installed to provide a weathertight roof system; and items specified in other sections of these specifications that become part of the structural standing seam metal roof system. All material and workmanship deficiencies, system deterioration caused by ordinary exposure to the elements and service design loads, water leaks and wind uplift damage shall be repaired as approved by the Contracting Officer. This warranty shall warrant and cover the entire cost of repair or replacement, including all material, labor, and related

markups. The Contractor may supplement this warranty with written warranties from the installer and/or manufacturer, which shall be submitted along with Contractor's warranty; however, the Contractor shall be ultimately responsible for this warranty. The Contractor's written warranty shall be as outlined in attached example WARRANTY FOR STRUCTURAL STANDING SEAM METAL ROOF (SSSMR) SYSTEM, and shall start upon final acceptance of the facility or the date the Government takes possession, whichever is earlier. ~~It shall be understood that the Contractor's Performance Bond will remain effective throughout the five year Contractor's warranty period for the entire SSSMR system as outlined above.~~ It is required that the contractor provide a ***separate bond*** in an amount equal to the installed total roofing system cost in favor of the owner (Government) covering the contractor’s warranty responsibilities effective throughout the five year contractor’s warranty period for the entire SSSMR system as outlined above.

1.7.2 Manufacturer's Material Warranties.

The Contractor shall furnish, in writing, the following manufacturer's material warranties which cover all SSSMR system components such as roof panels, anchor clips and fasteners, flashing, accessories, and trim, fabricated from coil material:

a. A manufacturer's 20 year material warranty warranting that the zinc-coated steel, aluminum-zinc alloy coated steel or aluminum-coated steel as specified herein will not rupture, structurally fail, fracture, deteriorate, or become perforated under normal design atmospheric conditions and service design loads. Liability under this warranty shall be limited exclusively to the cost of either repairing or replacing nonconforming, ruptured, perforated, or structurally failed coil material.

b. A manufacturer's 20 year exterior material finish warranty on the factory colored finish warranting that the finish, under normal atmospheric conditions at the site, will not crack, peel, or delaminate; chalk in excess of a numerical rating of eight, as determined by ASTM D 4214test procedures; or change color in excess of five CIE or Hunter Lab color difference (delta E) units in accordance with ASTM D 2244. Liability under this warranty is exclusively limited to refinishing with an air-drying version of the specified finish or replacing the defective coated material.

PART 2 PRODUCTS

2.1 ROOF PANELS

Panels shall be steel and shall have a factory color finish. Length of sheets shall be sufficient to cover the entire length of any unbroken roof slope for slope lengths that do not exceed 9 m. When length of run exceeds 9 m and panel laps are provided, each sheet in the run shall extend over three or more supports. Sheets longer than 30 m may be furnished if approved by the Contracting Officer. Width of sheets shall provide not more than 600 mm of coverage in place. SSSMR system with roofing panels greater than 300 mm in width shall have standing seams rolled during installation by an electrically driven seaming machine. Height of standing seams shall be not less than 50 mm for rolled seam and 75 mm for seams that are not rolled.

2.1.1 Steel Panels

Steel panels shall be zinc-coated steel conforming to ASTM A 653; aluminum-zinc alloy coated steel conforming to ASTM A 792, AZ 55 50 coating; or aluminum-coated steel conforming to ASTM A 463, Type 2, coating designation T2 65. Uncoated panels shall be 0.6 mm thick minimum. Panels shall be within 95 percent of tested thickness. Prior to shipment, mill finish panels shall be treated with a passivating chemical to inhibit the formation of oxide corrosion products. Panels that have become wet during shipment and have started to oxidize shall be rejected.

2.2 CONCEALED ANCHOR CLIPS

Concealed anchor clips shall be the same as the tested roofing system. Clip bases shall have factory punched or drilled holes for attachment. Clips shall be made from multiple pieces with the allowance for the total thermal movement required to take place within the clip. Single piece clips may be acceptable when the manufacturer can substantiate that the system can accommodate the thermal cyclic movement under sustained live or snow loads.

2.3 ACCESSORIES

Flashing, trim, metal closure strips, caps and similar metal accessories shall be the manufacturer's standard products. Exposed metal accessories shall be finished to match the panels furnished. The use of a continuous angle butted to the panel ends to form a closure will not be allowed.

2.4 FASTENERS

Fasteners for steel roof panels shall be zinc-coated steel, aluminum, corrosion resisting steel, or nylon capped steel, type and size specified below or as otherwise approved for the applicable requirements. Fasteners for aluminum roof panels shall be aluminum or corrosion resisting steel. Fasteners for structural connections shall provide both tensile and shear ultimate strengths of not less than 3340 N per fastener. Fasteners for accessories shall be the manufacturer's standard.

2.4.1 Screws

Screws for attaching anchor devices shall be not less than No. 14. Actual screw pull out test results shall be performed for the actual material gage and yield strength of the structural purlins or subpurlins to which the clip is to be anchored/attached. Other screws shall be as recommended by the manufacturer to meet the strength design requirements of the panels.

2.4.2 Bolts

Bolts shall be not less than 6 mm diameter, shouldered or plain shank as required, with locking washers and nuts.

2.4.3 Structural Blind Fasteners

Blind screw-type expandable fasteners shall be not less than 6 mm diameter. Blind (pop) rivets shall be not less than 7 mm minimum diameter.

2.5 SUBPURLINS

Cold formed supporting structural members/subpurlins shall have a minimum thickness of 1.5 mm and a minimum tensile yield strength of 345 MPa. Hot rolled structural members shall have a minimum thickness of 6 mm and a minimum tensile yield strength of 248 MPa. Subpurlins shall be galvanized or given one coat of shop paint.

2.6 FACTORY COLOR FINISH

Panels shall have a factory applied polyvinylidene fluoride finish on the exposed side. The exterior finish shall consist of a baked-on topcoat with an appropriate prime coat. Color shall match the color indicated on the drawings. The exterior coating shall be a nominal 0.025 mm thickness consisting of a topcoat of not less than 0.018 mm dry film thickness and the paint manufacturer's recommended primer of not less than 0.005 mm thickness. The interior color finish shall consist of a backer coat with a dry film thickness of 0.013 mm . The exterior color finish shall meet the test requirements specified below.

2.6.1 Salt Spray Test

A sample of the sheets shall withstand a salt spray test for a minimum of 1000 hours in accordance with ASTM B 117, including the scribe requirement in the test. Immediately upon removal of the panel from the test, the coating shall receive a rating of not less than 8F, few No. 8 blisters, as determined by ASTM D 714; and a rating of 8, 1 mm failure at scribe, as determined by ASTM D 1654.

2.6.2 Formability Test

When subjected to testing in accordance with ASTM D 522 Method B, 3 mm diameter mandrel, the coating film shall show no evidence of cracking to the naked eye.

2.6.3 Accelerated Weathering, Chalking Resistance and Color Change

A sample of the sheets shall be tested in accordance with ASTM D 4587, test condition B for 1000 total hours. The coating shall withstand the weathering test without cracking, peeling, blistering, loss of adhesion of the protective coating, or corrosion of the base metal. Protective coating that can be readily removed from the base metal with tape in accordance with ASTM D 3359, Test Method B, shall be considered as an area indicating loss of adhesion. Following the accelerated weathering test, the coating shall have a chalk rating not less than No. 8 in accordance with ASTM D 4214test procedures, and the color change shall not exceed 5 CIE or Hunter Lab color difference (delta E) units in accordance with ASTM D 2244. For sheets required to have a low gloss finish, the chalk rating shall be not less than No. 6 and the color difference shall be not greater than 7 units.

2.6.4 Humidity Test

When subjected to a humidity cabinet test in accordance with ASTM D 2247 for 1000 hours, a scored panel shall show no signs of blistering, cracking, creepage or corrosion.

2.6.5 Impact Resistance

Factory-painted sheet shall withstand direct and reverse impact in accordance with ASTM D 2794 13 mm diameter hemispherical head indenter, equal to 6.7 times the metal thickness in mm, expressed in Newton-meters, with no loss of adhesion.

2.6.6 Abrasion Resistance Test

When subjected to the falling sand test in accordance with ASTM D 968, Method A, the coating system shall withstand a minimum of 50 liters of sand before the appearance of the base metal. The term "appearance of base metal" refers to the metallic coating on steel or the aluminum base metal.

2.6.7 Pollution Resistance

Coating shall show no visual effects when covered spot tested in a 10 percent hydrochloric acid solution for 24 hours in accordance with ASTM D 1308.

2.7 INSULATION

Thermal resistance of insulation shall be not less than the R-values shown on the contract drawings. R-values shall be determined at a mean temperature of 24 degrees C in accordance with ASTM C 518. Insulation shall be a standard product with the insulation manufacturer, factory marked or identified with insulation manufacturer's name or trademark and R-value. Identification shall be on individual pieces or individual packages. The stated R-value of the insulation shall be certified by an independent Registered Professional Engineer if tests are conducted in the insulation manufacturer's laboratory.

2.7.1 Polyisocyanurate Rigid Board Insulation for Use Above a Roof Deck

Polyisocyanurate insulation shall conform to ASTM C 1289, Type II, Class 1 (having a minimum recovered material content of 9 percent by weight of core material in the polyisocyanurate portion). For polyisocyanurate the maximum design R-value per 25 mm of insulation used shall be 1.27. Facings shall be non-asphaltic, glass fiber reinforced.

2.8 SEALANT

Sealants shall be elastomeric type containing no oil or asphalt. Exposed sealant shall be colored to match the applicable building color and shall cure to a rubberlike consistency. Sealant placed in the roof panel standing seam ribs shall be provided in accordance with the manufacturer's recommendations.

2.9 GASKETS AND INSULATING COMPOUNDS

Gaskets and insulating compounds shall be nonabsorptive and suitable for insulating contact points of incompatible materials. Insulating compounds shall be nonrunning after drying.

2.10 VAPOR RETARDER

2.10.1 Vapor Retarders Separate from Insulation

Vapor retarder material shall be polyethylene sheeting conforming to ASTM D 4397. A single ply of 0.25 mm polyethylene sheet; or, at the Contractor's option, a double ply of 0.15 mm polyethylene sheet shall be used. A fully compatible polyethylene tape which has equal or better water vapor control characteristics than the vapor retarder material shall be provided. A cloth industrial duct tape in a utility grade shall also be provided to use as needed to protect the vapor retarder from puncturing.

2.11 EPDM RUBBER BOOTS

Flashing devices around pipe penetrations shall be flexible, one-piece devices molded from weather-resistant EPDM rubber. Rubber boot material shall be as recommended by the manufacturer. The boots shall have base rings made of aluminum or corrosion resisting steel that conform to the contours of the roof panel to form a weather-tight seal.

2.12 PREFABRICATED CURBS AND EQUIPMENT SUPPORTS

Prefabricated curbs and equipment supports shall be of structural quality, hot-dipped galvanized or galvalume sheet steel, factory primed and prepared for painting with mitered and welded joints. Integral base plates and water diverter crickets shall be provided. Minimum height of curb shall be 200 mm above finish roof. Curbs shall be constructed to match roof slope and to provide a level top surface for mounting of equipment. Curb flange shall be constructed to match configuration of roof panels. Curb size shall be coordinated, prior to curb fabrication, with the mechanical equipment to be supported. Strength requirements for equipment supports shall be coordinated to include all anticipated loads.

PART 3 EXECUTION

3.1 INSTALLATION

Installation shall be in accordance with the manufacturer's erection instructions and drawings. Dissimilar materials which are not compatible when contacting each other shall be insulated by means of gaskets or insulating compounds. Molded closure strips shall be installed wherever roofing sheets terminate in open-end configurations, exclusive of flashings. The closure strip installation shall be weather-tight and sealed. Screws shall be installed with a clutching screw gun, to assure screws are not stripped. Field test shall be conducted on each gun prior to starting installation and periodically thereafter to assure it is adjusted properly to install particular type and size of screw as recommended by manufacturer's literature. Improper or mislocated drill holes shall be plugged with an oversize screw fastener and gasketed washer; however, sheets with an excess of such holes or with such holes in critical locations shall not be used. Exposed surfaces and edges shall be kept clean and free from sealant, metal cuttings, hazardous burrs, and other foreign material. Stained, discolored, or damaged sheets shall be removed from the site.

3.1.1 Field Forming of Panels

When roofing panels are formed from factory-color-finished steel coils at the project site, the same care and quality control measures that are taken in shop forming of roofing panels shall be observed. Rollformer shall be

operated by the metal roofing manufacturer's representative. In cold weather conditions, preheating of the steel coils to be field formed shall be performed as necessary just prior to the rolling operations.

3.1.2 Subpurlins

Unless otherwise shown, subpurlins shall be anchored to the purlins or other structural framing members with bolts or screws. Attachment to the substrate (when provided) or to the panels is not permitted. The subpurlin spacing shall not exceed 750 mm on centers at the corner, edge and ridge zones, and 1500 mm maximum on centers for the remainder of the roof. Corner, edge, and ridge zones are as defined in ASCE 7.

3.1.3 Roof Panel Installation

Roof panels shall be installed with the standing seams in the direction of the roof slope. The side seam connections for installed panels shall be completed at the end of each day's work. Method of applying joint sealant shall conform to the manufacturer's recommendation to achieve a complete weather-tight installation. End laps of panels shall be provided in accordance with the manufacturer's instructions. Closures, flashings, EPDM rubber boots, roof curbs, and related accessories shall be installed according to the manufacturer's drawings. Fasteners shall not puncture roofing sheets except as provided for in the manufacturer's instructions for erection and installation. Expansion joints for the standing seam roof system shall be installed at locations indicated on the contract drawings and other locations indicated on the manufacturer's drawings.

3.1.4 Concealed Anchor Clips

Concealed anchor clips shall be fastened directly to the structural framing members. Attachment to the substrate (when provided) or to the panels is not permitted. The maximum distance, parallel to the seams, between clips shall be 750 mm on center at the corner, edge, and ridge zones, and 1500 mm maximum on centers for the remainder of the roof.

3.2 INSULATION INSTALLATION

Insulation shall be continuous over entire roof surface. Where expansion joints, terminations, and other connections are made, the cavity shall be filled with batt insulation with vapor retarder providing equivalent R-value and perm rating as remaining insulation. Insulation shall be installed as indicated and in accordance with manufacturer's instructions.

3.2.1 Board Insulation

Board shall be attached to the metal roof deck with bearing plates and fasteners, as recommended by the insulation manufacturer, so that the insulation joints are held tight against each other, and shall have a minimum of 1 fastener per 0.37 square meters. Layout and joint pattern of insulation and fasteners shall be indicated on the shop drawings. If more than one layer of insulation is required, joints in the second layer shall be offset from joints in the first layer. A layer of blanket insulation shall be placed over the rigid or semirigid board insulation to be compressed against the underside of the metal roofing to reduce thermal bridging, dampen noise, and prevent roofing flutter. This layer of blanket insulation shall be compressed a minimum of 50 percent.

3.3 PROTECTION OF VAPOR RETARDER FROM ROOF DECK

A cloth industrial duct tape shall be applied over the seams of metal roof decks, at penetration edges, and at surface areas exhibiting sharp burrs or similar protrusions. For other types of roof decks, cloth industrial duct tape shall be applied over irregularities which could potentially puncture polyethylene membrane.

3.4 CLEANING AND TOUCH-UP

Exposed SSSMR systems shall be cleaned at completion of installation. Debris that could cause discoloration and harm to the panels, flashings, closures and other accessories shall be removed. Grease and oil films, excess sealants, and handling marks shall be removed and the work shall be scrubbed clean. Exposed metal surfaces shall be free of dents, creases, waves, scratch marks, and solder or weld marks. Immediately upon detection, abraded or corroded spots on shop-painted surfaces shall be wire brushed and touched up with the same material used for the shop coat. Factory color finished surfaces shall be touched up with the manufacturer's recommended touch up paint.

CONTRACTOR'S FIVE (5) YEAR NO PENAL SUM WARRANTY
FOR
STRUCTURAL STANDING SEAM METAL ROOF (SSSMR) SYSTEM

PROJECT DESCRIPTION AND LOCATION (Include Bldg. No.):_____
CORPS OF ENGINEERS CONTRACT NUMBER:_____
SPECIFICATION SECTION NUMBER & DESCRIPTION:
07416 STRUCTURAL STANDING SEAM METAL ROOF (SSSMR) SYSTEM
_____

CONTRACTOR:_____

ADDRESS:_____

POINT OF CONTACT:_____
TELEPHONE NUMBER:_____

OWNER:_____

ADDRESS:_____

POINT OF CONTACT:_____
TELEPHONE NUMBER:_____

CONSTRUCTION AGENT:_____

ADDRESS:_____

POINT OF CONTACT:_____
TELEPHONE NUMBER:_____

THE SSSMR SYSTEM INSTALLED ON THE ABOVE NAMED BUILDING IS WARRANTED BY _____ _____ FOR A PERIOD OF FIVE (5) YEARS AGAINST WORKMANSHIP AND MATERIAL DEFICIENCIES, WIND DAMAGE, STRUCTURAL FAILURE AND LEAKAGE. THE SSSMR SYSTEM COVERED UNDER THIS WARRANTY SHALL INCLUDE THE ENTIRE ROOFING SYSTEM, INCLUDING THE STANDING SEAM METAL ROOF PANELS, PANEL FINISHES, ROOFING SECUREMENT COMPONENTS, ALL ACCESSORIES, COMPONENTS, AND TRIM; INCLUDING PENETRATIONS SUCH VENTS, CURBS, SKYLIGHTS; INTERIOR OR EXTERIOR GUTTERS AND DOWNSPOUTS; EAVES,

RIDGE, HIP, VALLEY, RAKE, GABLE, WALL, OR OTHER ROOF SYSTEM FLASHINGS INSTALLED
TO PROVIDE A WEATHERTIGHT ROOF SYSTEM; AND ITEMS SPECIFIED IN OTHER SECTIONS OF
THE SPECIFICATIONS THAT ARE PART OF THE SSSMR SYSTEM. ALL LEAKS SHALL BE
REPAIRED AS APPROVED BY THE CONTRACTING OFFICER. THIS WARRANTY SHALL COVER THE
ENTIRE COST OF REPAIR OR REPLACEMENT, INCLUDING ALL MATERIAL, LABOR, AND RELATED
MARKUPS. THE ABOVE REFERENCED WARRANTY COMMENCED ON THE DATE OF FINAL
ACCEPTANCE ON _____ AND WILL REMAIN IN EFFECT FOR STATED
DURATION FROM THIS DATE.

SIGNED, DATED, AND NOTARIZED (BY COMPANY PRESIDENT)

_____

(Company President) (Date)

(SEE REVERSE SIDE FOR SUPPLEMENTAL PROVISIONS AND EXCLUSIONS)

CONTRACTOR'S FIVE (5) YEAR NO PENAL SUM WARRANTY
FOR
STRUCTURAL STANDING SEAM METAL ROOF (SSSMR) SYSTEM
(continued)

THE CONTRACTOR MAY SUPPLEMENT THIS WARRANTY WITH WRITTEN WARRANTIES FROM THE INSTALLER AND/OR MANUFACTURER OF THE SSSMR SYSTEM, WHICH SHALL BE SUBMITTED ALONG WITH THE CONTRACTOR'S WARRANTY. HOWEVER, THE CONTRACTOR WILL BE ULTIMATELY RESPONSIBLE FOR THE WARRANTY AS OUTLINED IN THE SPECIFICATIONS AND AS INDICATED IN THIS WARRANTY EXAMPLE.

EXCLUSIONS FROM COVERAGE

1. NATURAL DISASTERS, ACTS OF GOD (LIGHTING, FIRE, EXPLOSIONS, SUSTAINED WIND FORCES IN EXCESS OF THE DESIGN CRITERIA, EARTHQUAKES, AND HAIL).

2. ACTS OF NEGLIGENCE OR ABUSE OR MISUSE BY GOVERNMENT OR OTHER PERSONNEL, INCLUDING ACCIDENTS, VANDALISM, CIVIL DISOBEDIENCE, WAR, OR DAMAGE CAUSED BY FALLING OBJECTS.

3. DAMAGE BY STRUCTURAL FAILURE, SETTLEMENT, MOVEMENT, DISTORTION, WARPAGE, OR DISPLACEMENT OF THE BUILDING STRUCTURE OR ALTERATIONS MADE TO THE BUILDING.

4. CORROSION CAUSED BY EXPOSURE TO CORROSIVE CHEMICALS, ASH OR FUMES GENERATED OR RELEASED INSIDE OR OUTSIDE THE BUILDING FROM CHEMICAL PLANTS, FOUNDRIES, PLATING WORKS, KILNS, FERTILIZER FACTORIES, PAPER PLANTS, AND THE LIKE.

5. FAILURE OF ANY PART OF THE SSSMR SYSTEM DUE TO ACTIONS BY THE OWNER TO INHIBIT FREE DRAINAGE FROM THE ROOF AND ALLOW PONDING WATER. CONTRACTOR'S DESIGN SHALL INSURE FREE DRAINAGE FROM THE ROOF AND NOT ALLOW PONDING WATER.

6. THIS WARRANTY APPLIES TO THE STRUCTURAL STANDING SEAM METAL ROOF (SSSMR) SYSTEM. IT DOES NOT INCLUDE ANY CONSEQUENTIAL DAMAGE TO THE BUILDING INTERIOR OR CONTENTS WHICH IS COVERED BY THE WARRANTY OF CONSTRUCTION CLAUSE INCLUDED IN THIS CONTRACT.

7. THIS WARRANTY CANNOT BE TRANSFERRED TO ANOTHER OWNER WITHOUT WRITTEN CONSENT OF THE CONTRACTOR AND THIS WARRANTY AND THE CONTRACT PROVISIONS WILL TAKE PRECEDENCE OVER ANY CONFLICTS WITH STATE STATUTES, UNLESS OTHERWISE APPROVED IN WRITING BY THE CONTRACTING OFFICER.

LEAKS SHALL BE RESPONDED TO WITHIN 48 HOURS OF RECEIPT OF NOTICE BY TELEPHONE OR IN WRITING FROM EITHER THE OWNER, OR CONTRACTING OFFICER. EMERGENCY REPAIRS, TO PREVENT FURTHER ROOF LEAKS, SHALL BE INITIATED IMMEDIATELY; A WRITTEN PLAN SHALL BE SUBMITTED FOR APPROVAL TO REPAIR OR REPLACE THIS SSSMR SYSTEM WITHIN SEVEN CALENDAR DAYS. ACTUAL WORK FOR PERMANENT REPAIRS OR REPLACEMENT SHALL BE STARTED WITHIN 30 DAYS AFTER RECEIPT OF NOTICE, AND COMPLETED WITHIN A REASONABLE TIME FRAME. IF THE CONTRACTOR FAILS TO ADEQUATELY RESPOND TO THE WARRANTY PROVISIONS, AS STATED IN THE CONTRACT AND AS CONTAINED HEREIN, THE

CONTRACTING OFFICER MAY HAVE THE SSSMR SYSTEM REPAIRED OR REPAIRED BY OTHERS AND
CHARGE THE COST TO THE CONTRACTOR.

A FRAMED COPY OF THIS WARRANTY SHALL BE POSTED IN THE MECHANICAL ROOM OR OTHER
APPROVED LOCATION DURING THE ENTIRE WARRANTY PERIOD.

End of Section

SECTION 07600

SHEET METALWORK, GENERAL
10/94

PART 1 GENERAL

1.1 REFERENCES

The publications listed below form a part of this specification to the extent referenced. The publications are referred to in the text by basic designation only.

AMERICAN SOCIETY FOR TESTING AND MATERIALS (ASTM)

ASTM B 32	(1995b) Solder Metal
ASTM D 543	(1987) Resistance of Plastics to Chemical Reagents
ASTM D 822	(1995) Conducting Tests on Paint and Related Coatings and Materials Using Filtered Open-Flame Carbon-Arc Light and Water Exposure Apparatus
ASTM D 828	(1993) Tensile Breaking Strength of Paper and Paperboard
ASTM D 1784	(1992) Rigid Poly(Vinyl Chloride) (PVC) Compounds and Chlorinated Poly(Vinyl Chloride) (CPVC) Compounds
ASTM D 2822	(1991) Asphalt Roof Cement
ASTM D 4022	(1994) Coal Tar Roof Cement, Asbestos Containing
ASTM D 4586	(1993) Asphalt Roof Cement, Asbestos Free
ASTM E 96	(1995) Water Vapor Transmission of Materials

SHEET METAL AND AIR CONDITIONING CONTRACTORS NATIONAL ASSOCIATION (SMACNA)

SMACNA-02	(1993) Architectural Sheet Metal Manual

1.2 GENERAL REQUIREMENTS

Sheet metalwork shall be accomplished to form weathertight construction without waves, warps, buckles, fastening stresses or distortion, and shall allow for expansion and contraction.

1.2.1 Coordination

Cutting, fitting, drilling, and other operations in connection with sheet metal required to accommodate the work of other trades shall be performed by sheet metal mechanics. Application of bituminous strip flashing over various sheet metal items is covered in Section 07510 BUILT-UP ROOFING. Installation of sheet metal items used in conjunction with roofing shall be coordinated with roofing work to permit continuous roofing operations. Sheet metalwork pertaining to heating, ventilating, and air conditioning is specified in Division 15.

1.3 SUBMITTALS

Government approval is required for submittals with a "GA" designation; submittals having an "FIO" designation are for information only. The following shall be submitted in accordance with Section 01300 SUBMITTAL PROCEDURES:

SD-04 Drawings

Materials; FIO.

Drawings of sheet metal items showing weights, gauges or thicknesses; types of materials; expansion-joint spacing; fabrication details; and installation procedures.

1.4 DELIVERY, STORAGE, AND HANDLING

Materials shall be adequately packaged and protected during shipment and shall be inspected for damage, dampness, and wet-storage stains upon delivery to the jobsite. Materials shall be clearly labeled as to type and manufacturer. Sheet metal items shall be carefully handled to avoid damage. Materials shall be stored in dry, ventilated areas until immediately before installation.

PART 2 PRODUCTS

2.1 MATERIALS

Lead, lead-coated metal, and galvanized steel shall not be used. Any metal listed by SMACNA-02 for a particular item may be used, unless otherwise specified or indicated. Materials shall conform to the requirements specified below and to the thicknesses and configurations established in SMACNA-02. Different items need not be of the same metal, except that if copper is selected for any exposed item, all exposed items shall be copper.

2.1.1 Accessories

Accessories and other items essential to complete the sheet metal installation, though not specifically indicated or specified, shall be provided.

2.1.2 Bituminous Cement

Type I asphalt cement conforming to ASTM D 2822 or ASTM D 4586. For coal tar roofing; coal tar cement conforming to ASTM D 4022.

2.1.3 Sealant

Unless otherwise specified, sealant shall be an elastomeric weather resistant sealant as specified in Section 07900 JOINT SEALING.

2.1.4 Fasteners

Fasteners shall be compatible with the fastened material and shall be the type best suited for the application.

2.1.5 Polyvinyl Chloride (PVC) Reglets

ASTM D 1784, Class 14333D, 1.9 mm minimum thickness.

2.1.6 Solder

ASTM B 32, 95-5 tin-antimony.

2.1.7 Through-Wall Flashing

a. Electro-sheet copper not less than 0.14 kg, factory coated both sides with acid- and alkali-resistant bituminous compound not less than 1.8 kg per square meter or factory covered both sides with asphalt-saturated cotton fabric, asphalt saturated glass-fiber fabric, or with 18 kg reinforced kraft paper bonded with asphalt.

b. Stainless steel, Type 304, not less than 0.08 mm thick, completely encased by and permanently bonded on both sides to 23 kg high strength bituminized crepe kraft paper, using hot asphalt, heat, and pressure.

c. Nonreinforced, waterproof, impermeable extruded elastomeric single ply sheeting not less than 0.76 mm thick.

d. 0.09 kg copper sheet, with 0.05 mm of dense, clear, polyethylene sheet bonded to each side of the copper.

e. Other through-wall flashing material may be used provided the following performance criteria are met.

(1) No cracking or flaking when bent 180 degrees over a 0.8 mm mandrel and rebent at the same point over the same mandrel in an opposite direction at 0 degree C.

(2) Water vapor permeability not more than 115 ng per Paper second per square meter (2 perms) when tested in accordance with ASTM E 96.

(3) Minimum breaking strength of 24 kgf/15 mm width in the weakest direction when tested in accordance with ASTM D 828.

(4) No visible deterioration after being subjected to a 400-hour direct weathering test in accordance with ASTM D 822.

(5) No shrinkage in length or width and less than 5 percent loss of breaking strength after a 10-day immersion, per ASTM D 543, in 5 percent (by weight) solutions, respectively, of sulfuric acid,

hydrochloric acid, sodium hydroxide or saturated lime (calcium hydroxide).

2.2 FINISH

Exposed flashing and fabrications shall have a factory applied polyvinylidene fluoride finish on the exposed side. The exterior finish shall consist of a baked-on topcoat with an appropriate prime coat. Color shall match the color indicated on the Drawings.

PART 3 EXECUTION

3.1 GENERAL

Items such as gutters, downspouts and louvers shall be fabricated in conformance with SMACNA-02 and as indicated. Unless otherwise specified or indicated, exposed edges shall be folded back to form a 13 mm (1/2 inch) hem on the concealed side, and bottom edges of exposed vertical surfaces shall be angled to form drips. Bituminous cement shall not be placed in contact with roofing membranes other than built-up roofing.

3.2 EXPANSION JOINTS

Expansion joints shall be provided as specified in SMACNA-02. Expansion joints in continuous sheet metal shall be provided at 12.0 meter intervals for copper and stainless steel and at 9.6 meter intervals for aluminum, except extruded aluminum gravel stops and fasciae which shall have expansion joints at not more than 3.6 meter spacing. Joints shall be evenly spaced. An additional joint shall be provided where the distance between the last expansion joint and the end of the continuous run is more than half the required interval spacing.

3.3 CONNECTIONS AND JOINTING

3.3.1 Soldering

Soldering shall apply to copper, and stainless steel items. Edges of sheet metal shall be pretinned before soldering is begun. Soldering shall be done slowly with well heated soldering irons so as to thoroughly heat the seams and completely sweat the solder through the full width of the seam. Edges of stainless steel to be pretinned shall be treated with soldering acid flux. Soldering shall follow immediately after application of the flux. Upon completion of soldering, the acid flux residue shall be thoroughly cleaned from the sheet metal with a water solution of washing soda and rinsed with clean water.

3.3.2 Riveting

Joints in aluminum sheets 1.0 mm or less in thickness shall be mechanically made.

3.3.3 Seaming

Flat-lock and soldered-lap seams shall finish not less than 25 mm wide. Unsoldered plain-lap seams shall lap not less than 75 mm unless otherwise specified. Flat seams shall be made in the direction of the flow.

3.4 CLEATS

A continuous cleat shall be provided where indicated or specified to secure loose edges of the sheet metalwork. Butt joints of cleats shall be spaced approximately 3 mm apart. The cleat shall be fastened to supporting wood construction with nails evenly spaced not over 300 mm on centers. Where the fastening is to be made to concrete or masonry, screws shall be used and shall be driven in expansion shields set in concrete or masonry.

3.5 GUTTERS AND DOWNSPOUTS

Gutters and downspouts shall be installed as indicated. Gutters shall be supported by continuous cleats and or by cleats spaced not less than 915 mm (36 inches) apart. Downspouts shall be rigidly attached to the building. Supports for downspouts shall be spaced according to manufacturer's recommendations.

3.6 FLASHINGS

Flashings shall be installed at locations indicated and as specified below. Sealing shall be according to the flashing manufacturer's recommendations. Flashings shall be installed at intersections of roof with vertical surfaces and at projections through roof, except that flashing for heating and plumbing, including piping, roof, and floor drains, and for electrical conduit projections through roof or walls are specified in other sections. Except as otherwise indicated, counter flashings shall be provided over base flashings. Perforations in flashings made by masonry anchors shall be covered up by an application of bituminous plastic cement at the perforation. Flashing shall be installed on top of joint reinforcement. Flashing shall be formed to direct water to the outside of the system.

3.6.1 Base Flashing

Metal base flashing shall be coordinated with roofing work. Metal base flashing shall be set in plastic bituminous cement over the roofing membrane, nailed to nailing strip, and secured in place on the roof side with nails spaced not more than 75 mm on centers. Metal base flashing shall not be used on built-up roofing.

3.6.2 Counter Flashings

Except as otherwise indicated, counter flashings shall be provided over base flashings. Counter flashing shall be installed as shown on the drawings and in SMACNA-02. Where bituminous base flashings are provided, the counter flashing shall extend down as close as practicable to the top of the cant strip. Counter flashing shall be factory formed to provide spring action against the base flashing.

3.6.3 Through-Wall Flashing

Through-wall flashing includes sill, lintel, and spandrel flashing. The flashing shall be laid with a layer of mortar above and below the flashing so that the total thickness of the two layers of the mortar and flashing are the same thickness as the regular mortar joints. Flashing shall not extend further into the masonry backup wall than the first mortar joint. Joints in flashing shall be lapped and sealed. Flashing shall be one piece for lintels and sills.

3.6.3.1 Lintel Flashing

Lintel flashing shall extend the full length of lintel. Flashing shall extend through the wall one masonry course above the lintels and shall be bent down over the vertical leg of the outer steel lintel angle not less than 50 mm, or shall be applied over top of masonry and precast concrete lintels. Bedjoints of lintels at control joints shall be underlaid with sheet metal bond breaker.

3.6.3.2 Sill Flashing

Sill flashing shall extend the full width of the sill and not less than 100 mm beyond ends of sill except at control joint where the flashing shall be terminated at the end of the sill.

3.6.4 Valley Flashing

Valley flashing shall be installed as specified in SMACNA-02 and as indicated.

3.7 REGLETS

Reglets shall be a factory fabricated product of proven design, complete with fittings and special shapes as required. Open-type reglets shall be filled with fiberboard or other suitable separator to prevent crushing of the slot during installation. Reglet plugs shall be spaced not over 300 mm on centers and reglet grooves shall be filled with sealant. Friction or slot-type reglets shall have metal flashings inserted the full depth of slot and shall be lightly punched every 300 mm to crimp the reglet and counter flashing together. Polyvinyl chloride reglets shall be sealed with the manufacturer's recommended sealant.

3.8 CONTRACTOR QUALITY CONTROL

The Contractor shall establish and maintain a quality control procedure for sheet metal used in conjunction with roofing to assure compliance of the installed sheet metalwork with the contract requirements. Any work found not to be in compliance with the contract shall be promptly removed and replaced or corrected in an approved manner. Quality control shall include, but not be limited to, the following:

a. Observation of environmental conditions; number and skill level of sheet metal workers; condition of substrate.

b. Verification of compliance of materials before, during, and after installation.

c. Inspection of sheet metalwork for proper size and thickness, fastening and joining, and proper installation.

The actual quality control observations and inspections shall be documented and a copy of the documentation furnished to the Contracting Officer at the end of each day.

End of Section

SECTION 07900

JOINT SEALING
06/97

PART 1 GENERAL

1.1 REFERENCES

The publications listed below form a part of this specification to the extent referenced. The publications are referred to in the text by basic designation only.

AMERICAN SOCIETY FOR TESTING AND MATERIALS (ASTM)

ASTM C 734	(1993) Low-Temperature Flexibility of Latex Sealants After Artificial Weathering
ASTM C 834	(1995) Latex Sealants
ASTM C 920	(1994) Elastomeric Joint Sealants
ASTM C 1184	(1995) Structural Silicone-Sealants
ASTM D 217	(1994) Cone Penetration of Lubricating Grease
ASTM D 1056	(1991) Flexible Cellular Materials - Sponge or Expanded Rubber
ASTM D 1565	(1981; R 1990) Flexible Cellular Materials - Vinyl Chloride Polymers and Copolymers (Open-Cell Foam)
ASTM E 84	(1996a) Surface Burning Characteristics of Building Materials

1.2 SUBMITTALS

Government approval is required for submittals with a "GA" designation; submittals having an "FIO" designation are for information only. The following shall be submitted in accordance with Section 01300 SUBMITTAL PROCEDURES:

SD-01 Data

Backing; FIO. Bond-Breaker; FIO.

Sealant; FIO.

Manufacturer's descriptive data including storage requirements, shelf life, curing time, instructions for mixing and application, and primer data (if required). A copy of the Material Safety Data Sheet shall be provided for each solvent, primer or sealant material.

SD-13 Certificates

Sealant; FIO.

Certificates of compliance stating that the materials conform to the specified requirements.

1.3 ENVIRONMENTAL REQUIREMENTS

The ambient temperature shall be within the limits of 4 to 32 degrees C when the sealants are applied.

1.4 DELIVERY AND STORAGE

Materials shall be delivered to the job in the manufacturer's original unopened containers. The container label or accompanying data sheet shall include the following information as applicable: manufacturer, name of material, formula or specification number, lot number, color, date of manufacture, mixing instructions, shelf life, and curing time at the standard conditions for laboratory tests. Materials shall be handled and stored to prevent inclusion of foreign materials. Materials shall be stored at temperatures between 4 and 32 degrees C unless otherwise specified by the manufacturer.

PART 2 PRODUCTS

2.1 BACKING

Backing shall be 25 to 33 percent oversize for closed cell and 40 to 50 percent oversize for open cell material, unless otherwise indicated.

2.1.1 Rubber

Cellular rubber sponge backing shall be ASTM D 1056, Type 1, open cell, or Type 2, closed cell, round cross section.

2.1.2 PVC

Polyvinyl chloride (PVC) backing shall be ASTM D 1565, Grade VO 12, open-cell foam, round cross section.

2.1.3 Neoprene

Neoprene backing shall be ASTM D 1056, closed cell expanded neoprene cord Type 2, Class C, Grade 2C2.

2.2 BOND-BREAKER

Bond-breaker shall be as recommended by the sealant manufacturer to prevent adhesion of the sealant to backing or to bottom of the joint.

2.3 PRIMER

Primer shall be non-staining type as recommended by sealant manufacturer for the application.

2.4 SEALANT

2.4.1 LATEX

Latex Sealant shall be ASTM C 834.

2.4.2 ELASTOMERIC

Elastomeric sealants shall conform to ASTM C 920 and the following:

a. Polysulfide Sealant: Type S or M, Grade NS or P, Class 12.5, Use NT, M, G, A, or O.

b. Polyurethane sealant: Grade NS or P, Class 12.5, Use T, NT, M, G, A, or O.

c. Silicone sealant: Type S or M, Grade NS or P, Class , Use NT, M, G, A, and O.

d. Structural silicone sealant: ASTM C 1184, Type S, M, Use G or O.

2.4.3 ACOUSTICAL

Rubber or polymer-based acoustical sealant shall have a flame spread of 25 or less and a smoke developed rating of 50 or less when tested in accordance with ASTM E 84. Acoustical sealant shall have a consistency of 250 to 310 when tested in accordance with ASTM D 217, and shall remain flexible and adhesive after 500 hours of accelerated weathering as specified in ASTM C 734, and shall be non-staining.

2.4.4 PREFORMED

Preformed sealant shall be polybutylene or isoprene-butylene based pressure sensitive weather resistant tape or bead sealant capable of sealing out moisture, air and dust when installed as recommended by the manufacturer. At temperatures from minus 34 to plus 71 degrees C, the sealant shall be non-bleeding and shall have no loss of adhesion.

2.5 SOLVENTS AND CLEANING AGENTS

Solvents, cleaning agents, and accessory materials shall be provided as recommended by the manufacturer.

PART 3 EXECUTION

3.1 GENERAL

3.1.1 Surface Preparation

The surfaces of joints to receive sealant or caulk shall be free of all frost, condensation and moisture. Oil, grease, dirt, chalk, particles of mortar, dust, loose rust, loose mill scale, and other foreign substances shall be removed from surfaces of joints to be in contact with the sealant. Oil and grease shall be removed with solvent and surfaces shall be wiped dry with clean cloths. For surface types not listed below, the sealant manufacturer shall be contacted for specific recommendations.

3.1.2 Concrete and Masonry Surfaces

Where surfaces have been treated with curing compounds, oil, or other such materials, the materials shall be removed by sandblasting or wire brushing. Laitance, efflorescence and loose mortar shall be removed from the joint cavity.

3.1.3 Steel Surfaces

Steel surfaces to be in contact with sealant shall be sandblasted or, if sandblasting would not be practical or would damage adjacent finish work, the metal shall be scraped and wire brushed to remove loose mill scale. Protective coatings on steel surfaces shall be removed by sandblasting or by a solvent that leaves no residue.

3.1.4 Aluminum Surfaces

Aluminum surfaces to be in contact with sealants shall be cleaned of temporary protective coatings. When masking tape is used for a protective cover, the tape and any residual adhesive shall be removed just prior to applying the sealant. Solvents used to remove protective coating shall be as recommended by the manufacturer of the aluminum work and shall be non-staining.

3.1.5 Wood Surfaces

Wood surfaces to be in contact with sealants shall be free of splinters and sawdust or other loose particles.

3.2 APPLICATION

3.2.1 Masking Tape

Masking tape shall be placed on the finish surface on one or both sides of a joint cavity to protect adjacent finish surfaces from primer or sealant smears. Masking tape shall be removed within 10 minutes after joint has been filled and tooled.

3.2.2 Backing

Backing shall be installed to provide the indicated sealant depth. The installation tool shall be shaped to avoid puncturing the backing.

3.2.3 Bond-Breaker

Bond-breaker shall be applied to fully cover the bottom of the joint without contaminating the sides where sealant adhesion is required.

3.2.4 Primer

Primer shall be used on concrete masonry units, wood, or other porous surfaces in accordance with instructions furnished with the sealant. Primer shall be applied to the joint surfaces to be sealed. Surfaces adjacent to joints shall not be primed.

3.2.5 Sealant

Sealant shall be used before expiration of shelf life. Multi-component sealants shall be mixed according to manufacturer's printed instructions. Sealant in guns shall be applied with a nozzle of proper size to fit the width of joint. Joints shall be sealed as detailed in the drawings. Sealant shall be forced into joints with sufficient pressure to expel air and fill the groove solidly. Sealant shall be installed to the indicated depth without displacing the backing. Unless otherwise indicated, specified, or recommended by the manufacturer, the installed sealant shall be dry tooled to produce a uniformly smooth surface free of wrinkles and to ensure full adhesion to the sides of the joint; the use of solvents, soapy water, etc., will not be allowed. Sealants shall be installed free of air pockets, foreign embedded matter, ridges and sags. Sealer shall be applied over the sealant when and as specified by the sealant manufacturer.

3.3 CLEANING

The surfaces adjoining the sealed joints shall be cleaned of smears and other soiling resulting from the sealant application as work progresses.

End of Section

SECTION 08110

STEEL DOORS AND FRAMES
02/95

PART 1 GENERAL

1.1 REFERENCES

The publications listed below form a part of this specification to the extent referenced. The publications are referred to in the text by basic designation only.

AMERICAN SOCIETY FOR TESTING AND MATERIALS (ASTM)

ASTM C 236	(1989; R 1993) Steady-State Thermal Performance of Building Assemblies by Means of a Guarded Hot Box
ASTM C 976	(1990) Thermal Performance of Building Assemblies by Means of a Calibrated Hot Box
ASTM D 2863	(1991) Measuring the Minimum Oxygen Concentration to Support Candle-Like Combustion of Plastics (Oxygen Index)
ASTM E 283	(1991) Determining the Rate of Air Leakage Through Exterior Windows, Curtain Walls, and Doors Under Specified Pressure Differences Across the Specimen

DOOR AND HARDWARE INSTITUTE (DHI)

DHI A115.1G	(1994) Installation Guide for Doors and Hardware

NATIONAL FIRE PROTECTION ASSOCIATION (NFPA)

NFPA 80	X (1995) Fire Doors and Windows
NFPA 80A	(1993) Protection of Buildings from Exterior Fire Exposures
NFPA 101	X (1997) Safety to Life from Fire in Buildings and Structures
NFPA 252	(1995) Fire Tests of Door Assemblies

STEEL DOOR INSTITUTE (SDOI)

SDOI SDI-100	(1991) Standard Steel Doors and Frames
SDOI SDI-106	(1996) Standard Door Type Nomenclature

SDOI SDI-107 (1984) Hardware on Steel Doors (Reinforcement - Application)

1.2 SUBMITTALS

Government approval is required for submittals with a "GA" designation; submittals having an "FIO" designation are for information only. The following shall be submitted in accordance with Section 01300 SUBMITTAL PROCEDURES:

SD-04 Drawings

Steel Doors and Frames; FIO.

Drawings using standard door type nomenclature in accordance with SDOI SDI-106 indicating the location of each door and frame, elevation of each model of door and frame, details of construction, method of assembling sections, location and extent of hardware reinforcement, hardware locations, type and location of anchors for frames, and thicknesses of metal. Drawings shall include catalog cuts or descriptive data for the doors, frames, and weatherstripping including air infiltration data and manufacturers printed instructions.

SD-09 Reports

Fire Rated Doors; FIO.

A letter by a nationally recognized testing laboratory which identifies the product manufacturer, type, and model; certifying that the laboratory has tested a sample assembly in accordance with NFPA 252 and issued a current listing for same.

SD-13 Certificates

Fire Rated Doors; FIO. Thermal Insulated Doors; FIO.

a. Certification of Oversized Fire Doors: Certificates of compliance in accordance with the requirements of NFPA 252 for fire doors exceeding the sizes for which label service is available.

b. Certification of Thermal Insulating Rating: Certification or test report for thermal insulated doors shall show compliance with the specified requirements. The certification, or test report, shall list the parameters and the type of hardware and perimeter seals used to achieve the rating.

1.3 DELIVERY AND STORAGE

During shipment, welded unit type frames shall be strapped together in pairs with heads at opposite ends or shall be provided with temporary steel spreaders at the bottom of each frame; and knockdown type frames shall be securely strapped in bundles. Materials shall be delivered to the site in undamaged condition, and stored out of contact with the ground and under a weathertight covering permitting air circulation. Doors and assembled frames shall be stored in an upright position in accordance with DHI A115.1G. Abraded, scarred, or rusty areas shall be cleaned and touched up with matching finishes.

1.4 WARRANTY

Manufacturer's standard performance guarantees or warranties that extend beyond a 1 year period shall be provided.

PART 2 PRODUCTS

2.1 DOORS AND FRAMES

Doors and frames shall be factory fabricated in accordance with SDOI SDI-100and the additional requirements specified herein. Door grade shall be heavy duty (Grade II) unless otherwise indicated on the door and door frame schedules. Exterior doors and frames shall be designation G60 galvanized. Doors and frames shall be prepared to receive hardware conforming to the templates and information provided under Section 08700 BUILDERS' HARDWARE. Doors and frames shall be reinforced, drilled, and tapped to receive mortised hinges, locks, latches, and flush bolts as required. Doors and frames shall be reinforced for surface applied hardware. Frames shall be welded type located as shown. Door frames shall be furnished with a minimum of three jamb anchors and one floor anchor per jamb. Anchors shall be not less than 1.2 mm (18 gauge) steel or 4.5 mm (7 gauge) diameter wire. For wall conditions that do not allow the use of a floor anchor, an additional jamb anchor shall be provided. Rubber silencers shall be furnished for installation into factory predrilled holes in door frames; adhesively applied silencers are not acceptable. Where frames are installed in masonry walls, plaster guards shall be provided on door frames at hinges and strikes. Full glass doors shall conform to SDOI SDI-100, Model 3, and shall include provisions for glazing. Reinforcing of door assemblies for closers and other required hardware shall be in accordance with SDOI SDI-100and the conditions of the fire door assembly listing when applicable. Exterior doors shall have top edges closed flush and sealed against water penetration.

2.2 FIRE RATED DOORS

Fire rated door assemblies shall bear the listing identification label of a nationally recognized testing laboratory qualified to perform tests of fire door assemblies in accordance with NFPA 252 and having a listing for the tested assemblies. The fire resistance rating shall be as shown. Doors exceeding the sizes for which listing label service is offered shall be in accordance with NFPA 252. Listing identification labels shall be constructed and permanently applied by a method which results in their destruction should they be removed.

2.3 THERMAL INSULATED DOORS

The interior of thermal insulated doors shall be completely filled with rigid plastic foam permanently bonded to each face panel. The thermal conductance (U-value) through the door shall not exceed 2.33 W/sq m times K (0.41 btu/hr times sq f times f) when tested as an operational assembly in accordance with ASTM C 236 or ASTM C 976. Doors with cellular plastic cores shall have a minimum oxygen index rating of 22 percent when tested in accordance with ASTM D 2863.

2.4 WEATHERSTRIPPING

Unless otherwise specified in Section 08700 BUILDERS' HARDWARE, weatherstripping shall be as follows: Weatherstripping for head and jamb shall be manufacturer's standard elastomeric type of synthetic rubber, vinyl, or neoprene and shall be installed at the factory or on the jobsite in accordance with the door frame manufacturer's recommendations. Weatherstripping for bottom of doors shall be as shown. Air leakage rate of weatherstripping shall not exceed 0.31 l/s per linear meter (0.20 cfm per linear foot) of crack when tested in accordance with ASTM E 283 at standard test conditions.

2.5 TRANSOM AND SIDELIGHT PANELS

Panels for transom and sidelight shall be constructed in accordance with SDOI SDI-100. Panels shall be nonremovable from the outside of exterior doors or the unsecure side of interior doors.

2.6 GLAZING

Glazing shall be as specified in Section 08810 GLASS AND GLAZING. Removable glazing beads shall be screw-on or snap-on type.

2.7 FACTORY FINISH

Doors and frames shall be phosphatized and primed with standard factory primer system.

PART 3 EXECUTION

3.1 INSTALLATION

Installation shall be in accordance with DHI A115.1G. Preparation for surface applied hardware shall be in accordance with SDOI SDI-107. Rubber silencers shall be installed in door frames after finish painting has been completed; adhesively applied silencers are not acceptable. Weatherstripping shall be installed at exterior door openings to provide a weathertight installation. Installation and operational characteristics of fire doors shall be in accordance with NFPA 80, NFPA 80A and NFPA 101. Hollow metal door frames shall be solid grouted in masonry walls as shown.

3.1.1 Thermal Insulated Doors

Hardware and perimeter seals shall be adjusted for proper operation. Doors shall be sealed weathertight after installation of hardware and shall be in accordance with Section 07900 JOINT SEALING.

3.2 FIELD PAINTED FINISH

Steel doors and frames shall be field painted in accordance with Section 09900 PAINTING, GENERAL. Weatherstrips shall be protected from paint. Finish shall be free of scratches or other blemishes. Color shall be as selected by the Contracting Officer.

End of Section

SECTION 08120

ALUMINUM DOORS AND FRAMES
03/94

PART 1 GENERAL

1.1 REFERENCES

The publications listed below form a part of this specification to the extent referenced. The publications are referred to in the text by basic designation only.

ALUMINUM ASSOCIATION (AA)

AA DAF-45	(1980; R 1993) Designation System for Aluminum Finishes

AMERICAN SOCIETY FOR TESTING AND MATERIALS (ASTM)

ASTM B 209	(1996) Aluminum and Aluminum-Alloy Sheet and Plate
ASTM B 221	(1996) Aluminum and Aluminum-Alloy Extruded Bars, Rods, Wire, Shapes, and Tubes
ASTM E 283	(1991) Determining the Rate of Air Leakage Through Exterior Windows, Curtain Walls, and Doors Under Specified Pressure Differences Across the Specimen
ASTM E 330	(1990) Structural Performance of Exterior Windows, Curtain Walls, and Doors by Uniform Static Air Pressure Difference
ASTM E 331	(1996) Water Penetration of Exterior Windows, Curtain Walls, and Doors by Uniform Static Air Pressure Difference

1.2 SYSTEM DESCRIPTION

Swing-type aluminum doors and frames, of size and design shown on the drawings, shall be provided at the locations indicated. Doors shall be furnished complete with frames, subframes, adjoining window wall, trim, and other accessories indicated and specified.

1.3 PERFORMANCE REQUIREMENTS

1.3.1 Wind Load Performance

Doors and frames shall be of sufficient strength to withstand a design wind load of 1440 Pa (30 pounds per square foot) of supported area with a deflection of not more than 1/175 times the length of the member. Doors shall be tested in accordance with ASTM E 330 at a pressure not less than 1.5 times the design load.

1.3.2 Water Penetration Performance

Frames and fixed areas, and non-handicap complying doors shall have no water penetration when tested in accordance with ASTM E 331 at a pressure of 383Pa .

1.4 SUBMITTALS

Government approval is required for submittals with a "GA" designation; submittals having an "FIO" designation are for information only. The following shall be submitted in accordance with Section 01300 SUBMITTAL PROCEDURES:

SD-01 Data

Aluminum Doors and Frames; FIO.

Manufacturer's descriptive data and catalog cuts including air-infiltration data.

SD-04 Drawings

Aluminum Doors and Frames; FIO.

A schedule showing the location of each door shall be included with the drawings. Drawings showing elevations of each door and frame type, details and method of anchorage, details of construction, location and installation of hardware, shape and thickness of materials, and details of joints and connections.

SD-06 Instructions

Installation; FIO. Cleaning; FIO.

Manufacturer's installation instructions and cleaning instructions.

SD-09 Reports

Full-Glazed and Flush Doors; FIO.

For full-glazed and flush doors, certified test reports from an independent testing laboratory, stating that doors are identical in design, materials, and construction to a door that has been tested and meets all test and specified requirements.

SD-14 Samples

Finishes; FIO.

Samples of the color anodized coating, showing the extreme color range.

1.5 DELIVERY AND STORAGE

Materials delivered to the jobsite shall be inspected for damage, and shall be unloaded with a minimum of handling. Storage shall be in a dry location with adequate ventilation, free from dust, water, and other contaminants,

and which permits easy access for inspecting and handling. Materials shall be neatly stored on the floor, properly stacked on nonabsorptive strips or wood platforms. Doors and frames shall not be covered with tarps, polyethylene film, or similar coverings.

1.6 WARRANTY

Manufacturer's standard performance guarantees or warranties that extend beyond a one-year period shall be provided.

PART 2 PRODUCTS

2.1 ALUMINUM DOORS AND FRAMES

Extrusions shall comply with ASTM B 221, Alloy 6063-T5 except alloy used for anodized color coatings shall be required to produce the specified color. Aluminum sheets and strips shall comply with ASTM B 209, alloy and temper best suited for the purpose. Fasteners shall be hard aluminum or stainless steel.

2.1.1 Finishes

Finish shall be color anodized. Color anodized finish shall be AA-M10C22A42 or AA-M10C22A44 in accordance with the requirements of AA DAF-45.

2.1.2 Welding and Fastening

Where possible, welds shall be located on unexposed surfaces. Welds required on exposed surfaces shall be smoothly dressed. Welding shall produce a uniform texture and color in the finished work, free of flux and spatter. Exposed screws or bolts will be permitted only at inconspicuous locations and shall have heads countersunk.

2.1.3 Anchors

Anchors shall be stainless steel or steel with a hot-dipped galvanized finish. Anchors of the sizes and shapes required shall be provided for securing aluminum frames to adjacent construction. Anchors shall be placed near top and bottom of each jamb and at intermediate points not more than 625 mm apart. Transom bars shall be anchored at ends, and mullions shall be anchored at head and sill. Where indicated on the drawings, vertical mullion reinforcement shall be of sufficient length to extend up to the overhead structural slab or framing and be securely attached thereto. The bottom of each frame shall be anchored to the rough floor construction with 2.4 mm (3/32 inch) thick stainless steel angle clips secured to the back of each jamb and to floor construction. Stainless steel bolts and expansion rivets shall be used for fastening clip anchors. Freestanding door frames shall be reinforced and securely anchored to floor construction.

2.1.4 Provisions For Hardware

Hardware for aluminum doors is specified in Section 08700 BUILDERS' HARDWARE. Doors and frames shall be cut, reinforced, drilled, and tapped at the factory to receive template hardware. Reinforcement shall be provided in the core of doors as required to receive locks, door closers, and other hardware. Doors to receive surface applied hardware shall be reinforced as required.

2.1.5 Provisions For Glazing

Glazing shall be as specified in Section 08810 GLASS AND GLAZING. Metal glazing beads, vinyl inserts, and glazing gaskets shall be provided for securing glass. Glass stops shall be tamperproof on exterior side.

2.1.6 Weatherstripping

Weatherstripping shall be continuous silicone-treated wool pile type, or a type recommended by the door manufacturer, and shall be provided on head and jamb of exterior doors. Weatherstripping for bottom of doors shall be as shown. Weatherstripping shall be easily replaced without special tools, and shall be adjustable at meeting stiles of pairs of doors. Air leakage rate of weatherstripping shall not exceed 0.775 L/s per lineal meter (0.5 cfm per lineal foot) of crack when tested in accordance with ASTM E 283 at standard test conditions.

2.2 FABRICATION OF ALUMINUM FRAMES

Frames shall be double-glazed and shall have a minimum total average unit thermal resistance of 0.34 square meter degree K per W (R value 1.92) . Frames shall be fabricated of extruded aluminum shapes to contours as shown on the drawings. Shapes shown are representations of design, function, and required profile. Dimensions shown are minimum. Shapes of equivalent design may be submitted, subject to approval of samples. Minimum metal wall thickness shall be 2.29 mm, except glazing beads, moldings, and trim shall be not less than 1.27 mm. Frames that are to receive glass shall have removable snap-on glass stops and glazing beads. Joints in frame members shall be milled to a hairline watertight fit, reinforced, and secured mechanically by steel clip arrangement or by screw spline attachment.

2.3 FABRICATION OF ALUMINUM DOORS

2.3.1 Sizes, Clearances, and Edge Treatment

Doors shall be not less than 44.4 mm (1-3/4 inches) thick. Clearances shall be 1.6 mm at hinge stiles, 3 mm at lock stiles and top rails, and 5 mm at floors and thresholds. Single-acting doors shall be beveled 3 mm at lock and meeting stile edges. Double-acting doors shall have rounded edges at hinge stile, lock stile, and meeting stile edges.

2.3.1.1 Full-Glazed Stile and Rail Doors

Doors shall have medium stiles and rails as shown, and shall be fabricated from extruded aluminum hollow seamless tubes or from a combination of open-shaped members interlocked or welded together. Doors shall be single-glazed. Top and bottom rail shall be fastened together by means of welding or by 10 mm diameter cadmium-plated tensioned steel tie rods. Extruded aluminum snap-in glazing beads shall be provided on interior side of doors. Extruded aluminum theft-proof snap-in glazing beads or fixed glazing beads shall be provided on exterior or security side of doors. Glazing beads shall have vinyl insert glazing gaskets, designed to receive glass of thickness required. Glass is specified in Section 08810GLASS AND GLAZING.

PART 3 EXECUTION

3.1 INSTALLATION OF DOORS, FRAMES, AND ACCESSORIES

3.1.1 Protection of Aluminum

Aluminum shall not be used where it will be in contact with copper or where it will contact water which flows over copper surfaces. Aluminum that will be in contact with wet or pressure-treated wood, mortar, concrete, masonry, or ferrous metals shall be protected against galvanic or corrosive action by one of the following methods.

3.1.1.1 Paint

Aluminum surfaces to be protected shall be solvent cleaned and given a coat of zinc-molybdate primer and one coat of aluminum paint.

3.1.1.2 Nonabsorptive Tape or Gasket

Nonabsorptive tape or gasket shall be placed between the adjoining surfaces and shall be cemented to the aluminum surface using a cement compatible with aluminum.

3.1.2 Installation

Frames and framing members shall be accurately set in position to receive doors, and adjoining sidelights. Frames shall be plumb, square, level, and in alignment, and securely anchored to adjacent construction. Metal-to-metal joints between framing members shall be sealed as specified in Section 07900 JOINT SEALING. Doors shall be accurately hung with proper clearances, and adjusted to operate properly. Protective coverings if provided shall be removed and the doors and frames shall be thoroughly cleaned.

End of Section

SECTION 08210

WOOD DOORS
05/97

PART 1 GENERAL

1.1 REFERENCES

The publications listed below form a part of this specification to the extent referenced. The publications are referred to in the text by basic designation only.

NATIONAL FIRE PROTECTION ASSOCIATION (NFPA)

NFPA 80	(1995) Fire Doors and Windows
NFPA 101	(1997) Safety to Life from Fire in Buildings and Structures
NFPA 252	(1995) Fire Tests of Door Assemblies

NATIONAL WOOD WINDOW & DOOR ASSOCIATION (NWWDA)

NWWDA I.S. 1-A	(1993) Architectural Wood Flush Doors
NWWDA I.S. 4	(1994) Water-Repellent Preservative Non-Pressure Treatment for Millwork

1.2 GENERAL REQUIREMENTS

1.2.1 Standard Products

Doors shall be of the type, size, and design indicated on the drawings, and shall be the standard products of manufacturers regularly engaged in the manufacture of wood doors.

1.2.2 Marking

Each door shall bear a stamp, brand, or other identifying mark indicating quality and construction of the door. The identifying mark or a separate certification shall include identification of the standard on which construction of the door is based, identity of the manufacturing plant, identification of the standard under which preservative treatment, if used, was made, and identification of the doors having a Type I glue bond.

1.3 SUBMITTALS

Government approval is required for submittals with a "GA" designation; submittals having an "FIO" designation are for information only. The following shall be submitted in accordance with Section 01300 SUBMITTAL PROCEDURES:

SD-04 Drawings

Wood Doors and Frames; FIO.

Drawings indicating the location of each door, elevation of each type of door, details of construction, marks to be used to identify the doors, and location and extent of hardware blocking. Drawings shall include catalog cuts or descriptive data for doors, weatherstripping, flashing, and thresholds to be used.

SD-06 Instructions

Fire Doors; FIO.

Manufacturers preprinted installation and touch-up instructions.

SD-13 Certificates

Fire Rated Doors; FIO. Adhesives; FIO.

Certificates for oversize fire doors and/or door/frame assemblies stating that the doors are identical in design, materials, and construction to a door that has been tested and meets the requirements for the class indicated. Certificate stating that adhesives used for proposed doors do not contain any formaldehyde.

1.4 STORAGE

Doors shall be stored in fully covered areas and protected from damage and from extremes in temperature and humidity. Doors shall be stored on supports to prevent warping or twisting, and to provide ventilation. Factory cartons or wrappers shall be kept intact until installation.

1.5 HARDWARE

Hardware, including weatherstripping and thresholds, is specified in Section 08700 BUILDERS' HARDWARE.

1.6 GLAZING

Glazing is specified in Section 08810 GLASS AND GLAZING.

1.7 WARRANTY

Manufacturer's standard performance guarantees or warranties that extend beyond a 1 year period shall be provided.

PART 2 PRODUCTS

2.1 GENERAL FABRICATION REQUIREMENTS

2.1.1 Edge Sealing

Wood end-grain exposed at edges of doors shall be sealed prior to shipment.

2.1.2 Preservative Treatment

Exterior softwood doors shall be water-repellent preservative treated in accordance with NWWDA I.S. 4.

2.1.3 Adhesives

Adhesives shall be in accordance with NWWDA I.S. 1-A, requirements for Type II Bond Doors (water-repellent) for interior doors. Adhesive for doors to receive a transparent finish shall be nonstaining. Adhesives shall contain no formaldehydes.

2.2 FLUSH DOORS

Flush doors shall be solid core and shall conform to NWWDA I.S. 1-A, except for the one year acclimatization requirement in paragraph T-2, which shall not apply. Wood doors shall be 5-ply or 7-ply construction with faces, stiles, and rails bonded to the cores.

2.2.1 Core Construction

2.2.1.1 Solid Cores

Door construction shall be particle board core and mineral core with vertical and horizontal edges bonded to the core. Blocking and hardware reinforcements for particle board and mineral core doors shall be manufacturer's recommendations in accordance with NWWDA I.S. 1-A.

2.2.2 Face Panels

2.2.2.1 Natural Finished Wood Veneer Doors

Veneer doors to receive natural finish shall be Premium Grade, book matched red oak veneer in accordance with NWWDA I.S. 1-A. Vertical stile strips shall be selected to provide edges of the same species and/or color as the face veneer. Door finish shall be in accordance with paragraph FIELD FINISHING.

2.3 FIRE RATED DOORS

Fire rated door assemblies shall bear the listing identification label of a nationally recognized testing laboratory qualified to perform tests of fire door assemblies in accordance with NFPA 252 and having a listing for the tested assemblies. The specific time interval rating on the labels shall be as shown. Door assemblies shall be in accordance with NFPA 80. Listing identification on labels shall be constructed and permanently applied by a method which results in their destruction should they be removed. Fire rated doors shall be mineral core of rating as indicated on the Drawings.

2.3.1 Reinforcement Blocking

Fire rated doors shall be provided, as required, with hardware reinforcement blocking, and top, bottom, and intermediate rail blocking. Lock blocks shall be manufacturer's standard but, not less than 125 mm by 450 mm. Reinforcement blocking shall be in compliance with the manufacturer's labeling requirements. Reinforcement blocking shall not be of mineral material.

2.3.2 Stile Edges

Composite fire rated doors shall be provided with vertical stile edges that do not contain fire retardant salts. Vertical stiles shall be of the same species and/or color as the face veneer.

2.4 MOULDING AND EDGING

Moulding and edging shall be as shown. Wood species for transparent finished doors shall be compatible with veneer.

2.5 LIGHT FRAMES AND ACCESSORIES

2.5.1 Metal Frames for Light Openings

Manufacturer's standard frame formed of 0.0478-inch- (1.2-mm-) thick, cold-rolled steel sheet, factory primed.

2.5.2 Wire Mesh for Light Openings

6 gage wire, 25 mm mesh.

PART 3 EXECUTION

3.1 INSTALLATION OF DOORS

3.1.1 General Use Doors

Doors shall be fit, hung, and trimmed as required. Door shall have a clearance of 3 mm at the sides and top and shall have a bottom clearance of 6 mm over thresholds and 13 mm at other locations unless otherwise shown. The lock edge or both edges of doors shall be beveled at the rate of 3 mm in 50 mm. Cuts made on the job shall be sealed immediately after cutting, using a clear varnish or sealer. Bottom of doors shall be undercut to allow clear door swing over carpeted areas. Vertical edges of doors which have not been rounded or beveled at the factory shall be eased when the doors are installed.

3.1.2 Fire Doors

Installation, hardware, and operational characteristics shall conform to NFPA 80 and NFPA 101 and shall be in strict conformance with the manufacturer's printed instructions. Properly sized pilot holes shall be drilled for screws in door edges. Factory applied labels shall remain intact where installed. Labeled hinge stile edge and top edge of door shall not be trimmed. Lockstile edge and bottom edge may be trimmed only to the extent recommended by the door manufacturer.

3.1.3 Installation of Accessories

Install wire mesh in light frames in doors indicated on the Drawings. Install mail drop as specified in Section 10100 in locations as indicated on the Drawings.

3.2 FIELD FINISHING

Doors to receive field finishing, whether paint or natural finish, shall be factory primed or sealed, as required, and then shall be finished in accordance with Section 09900 PAINTING, GENERAL. Factory applied sealer shall not prevent doors from accepting field stain and finish. Color shall be as indicated on the Drawings. Field touch-up of factory finishes shall be in accordance with manufacturers instructions.

End of Section

SECTION 08330

OVERHEAD ROLLING DOORS
06/97

PART 1 GENERAL

1.1 REFERENCES

The publications listed below form a part of this specification to the extent referenced. The publications are referred to in the text by basic designation only.

AMERICAN SOCIETY FOR TESTING AND MATERIALS (ASTM)

ASTM A 653	(1996) Steel Sheet, Zinc-Coated (Galvanized) or Zinc-Iron Alloy-Coated (Galvannealed) by the Hot-Dip process
ASTM E 84	(1996a) Surface Burning Characteristics of Building Materials
ASTM E 330	(1990) Structural Performance of Exterior Windows, Curtain Walls, and Doors by Uniform Static Air Pressure Difference

AMERICAN SOCIETY OF HEATING, REFRIGERATING, AND AIR-CONDITIONING ENGINEERS (ASHRAE)

ASHRAE-03	(1993) Handbook, Fundamentals I-P Edition

1.2 DESCRIPTION

Overhead rolling doors shall be spring counterbalanced, rolling type, with interlocking slats, complete with guides, fastenings, hood, brackets, and operating mechanisms, and shall be designed for use on openings as indicated. Each door shall be provided with a permanent label showing the manufacturer's name and address and the model/serial number of the door.

1.2.1 Wind Load Requirements

Doors and components shall be designed to withstand the minimum design wind load of 960 pa. Doors shall be constructed to sustain a superimposed load, both inward and outward, equal to 1-1/2 times the minimum design wind load. The door shall support the superimposed loads for a minimum period of 10 seconds without evidence of serious damage and shall be operable after conclusion of the tests. Test data showing compliance with design windload requirements for the specific door design tested in accordance with the uniform static air pressure difference test procedures of ASTM E 330shall be provided.

1.2.2 Operational Cycle Life

All portions of the door and door operating mechanism that are subject to movement, wear, or stress fatigue shall be designed to operate through a minimum number of 10 cycles per day. One complete cycle of door operation is defined as when the door is in the closed position, moves to the full open position, and returns to the closed position.

1.3 SUBMITTALS

Government approval is required for submittals with a "GA" designation; submittals having an "FIO" designation are for information only. The following shall be submitted in accordance with Section 01300 SUBMITTAL PROCEDURES:

SD-01 Data

Overhead Rolling Door Unit; FIO.

Manufacturer's catalog data, test data, and summary of forces and loads on the walls/jambs.

SD-04 Drawings

Overhead Rolling Door Unit; FIO.

Drawings showing the location of each door including schedules. Drawings shall include elevations of each door type, details and method of anchorage, details of construction, location and installation of hardware, shape and thickness of materials, details of joints and connections, and details of guides, power operators, controls, and other fittings.

SD-06 Instructions

Overhead Rolling Door Unit; FIO.

Manufacturer's preprinted installation instructions.

SD-14 Samples

Overhead Rolling Door Unit; FIO.

Manufacturer's standard color samples of factory applied finishes.

SD-19 Operation and Maintenance Manuals

Operation Manual; FIO.

Maintenance and Repair Manual ; FIO.

Six copies of the system operation manual and system maintenance and repair manual for each type of door and control system.

1.4 DELIVERY AND STORAGE

Doors shall be delivered to the jobsite wrapped in a protective covering with the brands and names clearly marked thereon. Doors shall be stored in a dry location that is adequately ventilated and free from dirt and dust,

water, and other contaminants, and in a manner that permits easy access for inspection and handling.

1.5 WARRANTY

Manufacturer's standard performance guarantees or warranties that extend beyond a 1-year period shall be provided.

1.6 OPERATION AND MAINTENANCE MANUALS

Operating instructions outlining the step-by-step procedures required for door and shutter operation for the overhead rolling door unit shall be provided. The instructions shall include the manufacturer's name, model number, service manual, parts list, and brief description of all equipment and their basic operating features. Maintenance instructions listing routine maintenance procedures, possible breakdowns and repairs, troubleshooting guides. A complete list of parts and supplies, source of supply, and a list of the high mortality maintenance parts shall be provided.

PART 2 PRODUCTS

2.1 OVERHEAD ROLLING DOORS

Doors shall be surface-mounted type with guides at jambs set back a sufficient distance to clear the opening. Exterior doors shall be mounted as indicated. on interior side of walls.

2.1.1 Curtains

The curtains shall roll up on a barrel supported at the head of opening on brackets, and shall be balanced by helical torsion springs. Steel slats for doors less than 4.5 m wide shall be minimum bare metal thickness of 0.85 mm.. Steel slats for doors from 4.5 m to 6.3 m wide shall be minimum bare metal thickness of 1.0 mm.. Steel slats for doors 6.3 m wide and wider shall be minimum bare metal thickness of 1.3 mm.. Slats shall be of the minimum bare metal decimal thickness required for the width indicated and the wind pressure specified above.

2.1.1.1 Insulated Curtains

The slat system shall supply a minimum R-value of 4 when calculated in accordance with ASHRAE-03. Slats shall be of the flat type as standard with the manufacturer. Slats shall consist of a urethane core not less than 17 mm thick, completely enclosed within metal facings. Exterior face of slats shall be gauge as specified for curtains. Interior face shall be not lighter than 0.70 mm. The insulated slat assembly shall have a flame spread rating of not more than 25 and a smoke development factor of not more than 50 when tested in accordance with ASTM E 84.

2.1.2 Endlocks and Windlocks

The ends of each alternate slat for interior doors shall have steel endlocks of manufacturer's stock design. In addition to endlocks, non-rated exterior doors shall have the manufacturer's standard windlocks as required to withstand the wind load. Windlocks shall prevent the curtain from leaving guides because of deflection from specified wind pressure.

2.1.3 Bottom Bar

The curtain shall have a standard bottom bar consisting of two hot-dip galvanized steel angles for steel doors. A sensing edge shall be attached to the bottom bar of doors that are electric-power operated.

2.1.4 Guides

Guides shall be steel structural shapes or formed steel shapes, of a size and depth to provide proper clearance for operation and resistance under the design windload. Guides shall be attached to adjoining construction with fasteners recommended by the manufacturer. Spacing of fasteners shall be as required to meet the minimum design windload. Doors and guides in hazardous areas shall have static grounding.

2.1.5 Barrel

The barrel shall be steel pipe or commercial welded steel tubing of proper diameter for the size of curtain. Deflection shall not exceed 2.5 mm per meter of span. Ends of the barrel shall be closed with metal plugs, machined to fit the pipe. Aluminum plugs are acceptable on non-fire door barrels.

2.1.6 Springs

Oil tempered helical steel counter-balance torsion springs shall be installed within the barrel and shall be capable of producing sufficient torque to assure easy operation of the door curtain. Access shall be provided for spring tension adjustment from outside of the bracket without removing the hood.

2.1.7 Brackets

Brackets shall be of steel plates to close the ends of the roller-shaft housing, and to provide mounting surfaces for the hood. An operation bracket hub and shaft plugs shall have sealed prelubricated ball bearings.

2.1.8 Hoods

Hoods shall be steel stainless steel aluminum with minimum bare metal thickness of 0.70 mm formed to fit contour of the end brackets, and shall be reinforced with steel rods, rolled beads, or flanges at top and bottom edges. Multiple segment and single piece hoods shall be provided with support brackets of the manufacturer's standard design as required for adequate support.

2.1.9 Weatherstripping

Exterior doors shall be fully weatherstripped. A compressible and replaceable weather seal shall be attached to the bottom bar. Weather seal at door guides shall be continuous vinyl or neoprene, bulb or leaf type, or shall be nylon-brush type. A weather baffle shall be provided at the lintel or inside the hood. Weatherstripping shall be easily replaced without special tools.

2.1.10 Operation

Doors shall be operated by means of manual hand-chain.

2.1.10.1 Manual Hand-Chain Operation

Operation shall be by means of a galvanized endless chain extending to within 900 mm of floor. Reduction shall be provided by use of roller chain and sprocket drive or suitable gearing, to reduce the pull required on hand chain to not over 156 N. Gears shall be high grade gray cast iron.

2.1.11 Locking

Locking shall consist of chain lock keeper, suitable for padlock by others, for chain operated doors.

2.1.12 Finish

Steel slats and hoods shall be hot-dip galvanized G90 in accordance with ASTM A 653, and shall be treated for paint adhesion and shall receive a factory baked-on prime coat for field finishing. Surfaces other than slats, hood, and faying surfaces shall be cleaned and treated to assure maximum paint adherence and shall be given a factory dip or spray coat of rust inhibitive metallic oxide or synthetic resin primer.

PART 3 EXECUTION

3.1 INSTALLATION

Doors shall be installed in accordance with approved detail drawings and manufacturer's instructions. Anchors and inserts for guides, brackets, hardware, and other accessories shall be accurately located. Upon completion, doors shall be free from warp, twist, or distortion. Doors shall be lubricated, properly adjusted, and demonstrated to operate freely.

3.2 FIELD PAINTED FINISH

Steel doors and frames shall be field painted in accordance with Section 09900 PAINTING, GENERAL. Weatherstrips shall be protected from paint. Finish shall be free of scratches or other blemishes. Color shall be as indicated on the Drawings.

End of Section

SECTION 08353

ACCORDION PARTITIONS, FOLDING DOORS, AND OPERABLE PARTITIONS
05/95

PART 1 GENERAL

1.1 REFERENCES

The publications listed below form a part of this specification to the extent referenced. The publications are referred to in the text by basic designation only.

AMERICAN SOCIETY FOR TESTING AND MATERIALS (ASTM)

ASTM E 84	(1995a) Surface Burning Characteristics of Building Materials
ASTM E 90	(1990) Laboratory Measurement of Airborne Sound Transmission Loss of Building Partitions
ASTM E 413	(1987; R 1994) Rating Sound Insulation
ASTM F 793	(1993) Standard Classification of Wallcovering by Durability Characteristics

1.2 SUBMITTALS

Government approval is required for submittals with a "GA" designation; submittals having an "FIO" designation are for information only. The following shall be submitted in accordance with Section 01300 SUBMITTAL PROCEDURES:

SD-01 Data

Accordion Partitions; FIO. Operable Partitions; FIO.

Manufacturer's descriptive data, performance charts, catalog cuts, and installation instructions.

SD-04 Drawings

Accordion Partitions; FIO. Operable Partitions; FIO.

Drawings containing complete schematic diagrams and details required to demonstrate that the system has been coordinated and will properly function as a unit. Drawings shall show proposed layout and anchorage of equipment and appurtenances, and equipment relationship to other parts of the work including clearances for maintenance and operation.

SD-13 Certificates

Materials; FIO. Accordion Partitions; FIO. Operable Partitions; FIO.

Certificate attesting that the materials meet the requirements specified and that partitions have specified acoustical and flame retardant properties, as determined by test.

SD-14 Samples

Accordion Partitions; FIO. Operable Partitions; FIO.

Manufacturer's standard color samples of specified surfaces and finishes.

SD-19 Operation and Maintenance Manuals

Accordion Partitions; FIO. Operable Partitions; FIO.

Six complete copies of operating instructions outlining the procedures required for electrically operated partitions. The instructions shall include the manufacturer's name, model number, service manual, parts list, and brief description of all equipment and operating features. Data shall include a complete list of parts and supplies, with current unit prices and source of supply, and a list of the parts recommended by the manufacturer to be replaced after 1 year and 3 years of service.

Six complete copies of maintenance instructions explaining routine maintenance procedures including inspection, adjustments, lubrication, and cleaning. The instructions shall list possible breakdown, methods of repair, and a troubleshooting guide. The instructions shall include equipment layout and simplified wiring and control diagrams of the system as installed.

1.3 DELIVERY AND STORAGE

Materials shall be delivered to the jobsite in the manufacturer's original, unopened packages and shall be stored with protection from the weather, humidity and temperature variations, dirt and dust, or other contaminants.

1.4 WARRANTY

Manufacturer's standard performance guarantees or warranties that extend beyond a 1 year period shall be provided.

PART 2 PRODUCTS

2.1 MATERIALS

Material and equipment shall be the standard products of a manufacturer regularly engaged in the manufacture of such products and shall essentially duplicate items that have been in satisfactory use for at least 2 years prior to bid opening. Equipment shall be supported by a service organization that is, in the opinion of the Contracting Officer, reasonably convenient to the site. Door and partition finishes shall have a Class A rating when tested in accordance with ASTM E 84.

2.1.1 Vinyl Covering

The vinyl coated fabric shall conform to ASTM F 793, Category V, Type II (Medium duty). Covering shall be as indicated on the Drawings.

2.1.2 Hardware

Accordion partitions shall be furnished with grip handles with latch only. An upper latch with extended pulls shall be provided on units over 2400 mm high.

2.1.3 Sweep Strips

Sweep strips shall be vinyl or other material which will not crack or craze with severe usage. Sweep strip shall control STC to the specified rating.

2.1.4 Track

Track shall be as shown and shall be of extruded aluminum or enamel finish steel. Track shall be manufacturer's standard product designed for the weight of door or partition furnished. Track sections shall be provided in the maximum lengths practicable, not less than 1800 mm long except for narrow doors and at ends of runs where short length is required. Suitable joint devices such as interlocking keys shall be provided at each joint to provide permanent alignment of track.

2.1.5 Metal Soffit

Soffit shall be provided when steel track is recessed. Soffit shall be of metal of adequate thickness to protect the ceiling from damage by door operation and shall be provided with the door manufacturer's standard neutral-color applied finish. Soffit on aluminum track shall be an integral part of the track.

2.2 ACCORDION PARTITIONS

Accordion partitions shall consist of top hung ball bearing carriers which support a system of hinged folding panels with a durable surface finish. Partitions shall have perimeter and jamb seals which shall provide the indicated STC rating. Ferrous metal parts shall be either cadmium plated or zinc coated and post shall have manufacturer's standard shop finish paint. Doors shall be manually electrically operated. Door widths shall be as shown.

2.2.1 Pantograph Framework with Flexible Covering

Accordion partitions shall have a steel pantograph hinged framework and shall meet the STC rating of 44 in accordance with ASTM E 90 and ASTM E 413. Intermediate pantographs shall be provided as required and door shall have a control device to prevent flattening of the folds when the panel is fully extended. The covering shall be as indicated on the Drawings.

2.2.2 Steel Panels

Accordion partitions shall be vinyl-clad cold rolled steel panels connected by full length steel hinges. Inner surface of the panels shall be covered with insulating material. A spacing chain shall be provided to control panel spacing and extension. The STC rating of the partition shall be 44 in accordance with ASTM E 90 and ASTM E 413.

2.3 ELECTRICAL OPERATORS

Electrical operator shall be furnished and installed where indicated. Operation shall cause retraction of seals providing minimum 25 mm clearance with the floor. Final closing movement shall automatically seal the partition in place without the use of supplementary manually operated devices. Operation shall be two key controls wired in series and located on opposite sides of the room and opposite ends of the partition. Minimum travel speed shall be 15 mm/second. Operator shall have motor adequate for partition weight, complete with speed reducer, friction clutch, relays, limit switches, and an emergency release mechanism to permit manual operation.

2.4 SAFETY DEVICE

The leading edge of electrically operated doors shall have an electric safety device that will immediately reverse the door movement upon contact with an obstruction and cause the door to return to its full open position.

2.5 COLOR

Color shall be as indicated on the Drawings.

PART 3 EXECUTION

3.1 INSTALLATION

Installation shall be in accordance with the manufacturer's approved installation instructions. Electrical work shall conform to Section 16415 ELECTRICAL WORK, INTERIOR.

End of Section

SECTION 08520

ALUMINUM WINDOWS
02/94

PART 1 GENERAL

1.1 REFERENCES

The publications listed below form a part of this specification to the extent referenced. The publications are referred to in the text by basic designation only.

ALUMINUM ASSOCIATION (AA)

AA DAF-45	(1980) Designation System for Aluminum Finishes

AMERICAN ARCHITECTURAL MANUFACTURERS ASSOCIATION (AAMA)

AAMA 101	(1993) Voluntary Specifications for Aluminum and Poly(Vinyl Chloride) (PVC) Prime Windows and Glass Doors
AAMA 1503.1	(1988) Voluntary Test Method for Thermal Transmittance and Condensation Resistance of Windows, Doors and Glazed Wall Sections

AMERICAN SOCIETY FOR TESTING AND MATERIALS (ASTM)

ASTM E 283	(1991) Determining the Rate of Air Leakage Through Exterior Windows, Curtain Walls, and Doors Under Specified Pressure Differences Across the Specimen
ASTM E 330	(1990) Structural Performance of Exterior Windows, Curtain Walls, and Doors by Uniform Static Air Pressure Difference
ASTM E 547	(1993) Water Penetration of Exterior Windows, Curtain Walls, and Doors by Cyclic Static Air Pressure Differential

NATIONAL FIRE PROTECTION ASSOCIATION (NFPA)

NFPA 101	(1994) Safety to Life from Fire in Buildings and Structures

1.2 WINDOW PERFORMANCE

Aluminum windows shall be designed to meet the following performance requirements. Testing requirements shall be performed by an independent testing laboratory or agency.

1.2.1 Structural Performance

Structural test pressures on window units shall be for positive load (inward) and negative load (outward) in accordance with ASTM E 330. After testing, there shall be no glass breakage, permanent damage to fasteners, hardware parts, support arms or actuating mechanisms or any other damage which could cause window to be inoperable. There shall be no permanent deformation of any main frame, sash or ventilator member in excess of the requirements established by AAMA 101 for the window types and classification specified in this section.

1.2.2 Air Infiltration

Air infiltration shall not exceed the amount established by AAMA 101for each window type when tested in accordance with ASTM E 283.

1.2.3 Water Penetration

Water penetration shall not exceed the amount established by AAMA 101for each window type when tested in accordance with ASTM E 547.

1.2.4 Thermal Performance

Thermal transmittance for thermally broken aluminum windows with insulating glass shall not exceed R-Value Class 0.44 m k/Q (R2.5) when tested in accordance with AAMA 1503.1.

1.2.5 Life Safety Criteria

Windows shall conform to NFPA 101 Life Safety Code when rescue and/or second means of escape are indicated.

1.3 SUBMITTALS

Government approval is required for submittals with a "GA" designation; submittals having an "FIO" designation are for information only. The following shall be submitted in accordance with Section 01300 SUBMITTAL PROCEDURES:

SD-01 Data

Aluminum Windows; FIO.

Manufacturer's descriptive data and catalog cut sheets.

SD-04 Drawings

Aluminum Windows; FIO.

Drawings indicating elevations of window, rough-opening dimensions for each type and size of window, full-size sections, thicknesses of metal, fastenings, methods of installation and anchorage, connections with other work, type of wall construction, size and spacing of anchors, method of glazing, types and locations of operating hardware, mullion details, weatherstripping details, and window schedules showing locations of each window type.

SD-06 Instructions

Aluminum Windows; FIO.

Manufacturer's preprinted installation instructions and cleaning instructions.

SD-09 Reports

Aluminum Windows; FIO.

Reports for each type of aluminum window attesting that identical windows have been tested and meet all performance requirements established under paragraph WINDOW PERFORMANCE.

SD-13 Certificates

Aluminum Windows; FIO.

Certificates stating that the aluminum windows are AAMA certified conforming to requirements of this section. Labels or markings permanently affixed to the window will be accepted in lieu of certificates.

SD-14 Samples

Aluminum Windows; FIO.

Manufacturer's standard color samples of the specified finishes.

1.4 QUALIFICATION

Window manufacturer shall specialize in designing and manufacturing the type of aluminum windows specified in this section, and shall have a minimum of three years of documented successful experience. Manufacturer shall have the facilities capable of meeting contract requirements, single-source responsibility and warranty.

1.5 MOCK-UPS

Before fabrication, full-size mock-up of one window unit complete with glass and AAMA certification label shall be required for review of window construction and quality of hardware operation.

1.6 DELIVERY AND STORAGE

Aluminum windows shall be delivered to project site and stored in accordance with manufacturer's recommendations. Damaged windows shall be replaced with new windows.

1.7 WARRANTY

Manufacturer's standard performance guarantees or warranties that extend beyond a 1 year period shall be provided.

PART 2 PRODUCTS

2.1 ALUMINUM WINDOW TYPES

Aluminum windows shall consist of complete units including sash, glass, frame, weatherstripping, and hardware. Windows shall conform to AAMA 101. Windows shall be single-glazed and double-glazed.

2.1.1 Fixed Windows

Aluminum fixed windows shall conform to AAMA 101 HS-HC40 type, non-operable glazed frame, complete with provisions for reglazing in the field.

2.1.2 Horizontal-Sliding Windows

Aluminum horizontal windows shall conform to AAMA 101 HS-HC40 type consisting of sliding sash and fixed lite. Sash guides shall be nylon wheels.

2.2 WEATHERSTRIPPING

Weatherstripping for ventilating sections shall be of type designed to meet water penetration and air infiltration requirements specified in this section in accordance with AAMA 101, and shall be manufactured of material compatible with aluminum and resistant to weather. Weatherstrips shall be factory-applied and easily replaced in the field. Neoprene or polyvinylchloride weatherstripping are not acceptable where exposed to direct sunlight.

2.3 ACCESSORIES

2.3.1 Fasteners

Fastening devices shall be window manufacturer's standard design made from aluminum, non-magnetic stainless steel, cadmium-plated steel, nickel/chrome-plated steel or magnetic stainless steel in compliance with AAMA 101. Self-tapping sheet metal screws will not be acceptable for material thicker than 2 mm (1/16 inch).

2.3.2 Hardware

Hardware shall be as specified for each window type and shall be fabricated of aluminum, stainless steel, cadmium-plated steel, zinc-plated steel or nickel/chrome-plated steel of quality established by AAMA 101.

2.3.3 Window Anchors

Anchoring devices for installing windows shall be made of aluminum, cadmium-plated steel, stainless steel, or zinc-plated steel conforming to AAMA 101.

2.4 GLASS AND GLAZING

Aluminum windows shall be designed for inside glazing, field glazing, and for glass types scheduled on drawings and specified in Section 08810GLASS AND GLAZING. Units shall be complete with glass and glazing provisions to meet AAMA 101. Glazing material shall be compatible with aluminum, and shall not require painting.

2.5 FINISH

2.5.1 Anodized Aluminum Finish

Exposed surfaces of aluminum windows shall be finished with anodic coating conforming to AA DAF-45: Architectural Class I, AA-M10-C22-A41, clear anodic coating, 0.02 mm (0.7 mil) or thicker, 215-R1 Natural Color and Architectural Class I, AA-M10-C22-A44, color anodic coating, 0.02 mm (0.7 mil) or thicker. Finish shall be as indicated on the Drawings and shall be free of scratches and other blemishes.

PART 3 EXECUTION

3.1 INSTALLATION

Aluminum windows shall be installed in accordance with approved shop drawings and manufacturer's published instructions. Aluminum surfaces in contact with masonry, concrete, wood and dissimilar metals other than stainless steel, zinc, cadmium or small areas of white bronze, shall be protected from direct contact using protective materials recommended by AAMA 101. The completed window installation shall be watertight in accordance with Section 07900 JOINT SEALING. Glass and glazing shall be installed in accordance with requirements of this section and Section 08810 GLASS AND GLAZING.

3.2 ADJUSTMENTS AND CLEANING

3.2.1 Hardware Adjustments

Final operating adjustments shall be made after glazing work is complete. Operating sash or ventilators shall operate smoothly and shall be weathertight when in locked position.

3.2.2 Cleaning

Aluminum window finish and glass shall be cleaned on exterior and interior sides in accordance with window manufacturer's recommendations. Alkaline or abrasive agents shall not be used. Precautions shall be taken to avoid scratching or marring window finish and glass surfaces.

End of Section

SECTION 08700

BUILDERS' HARDWARE
03/96

PART 1 GENERAL

1.1 REFERENCES

The publications listed below form a part of this specification to the extent referenced. The publications are referred to in the text by basic designation only.

AMERICAN SOCIETY FOR TESTING AND MATERIALS (ASTM)

ASTM E 283	(1991) Determining the Rate of Air Leakage Through Exterior Windows, Curtain Walls and Doors Under Specified Pressure Differences Across the Specimen

BUILDERS HARDWARE MANUFACTURERS ASSOCIATION (BHMA)

BHMA-01	(Effective thru Jun 1995) Directory of Certified Locks & Latches
BHMA-02	(Effective thru Jul 1995) Directory of Certified Door Closers
BHMA-03	(Effective thru Jul 1996) Directory of Certified Exit Devices
BHMA ANSI/BHMA A156.1	(1988) Butts and Hinges
BHMA ANSI/BHMA A156.2	(1998) Bored Locks & Latches
BHMA ANSI/BHMA A156.3	(1994) Exit Devices
BHMA ANSI/BHMA A156.4	(1992) Door Controls - Closers
BHMA ANSI/BHMA A156.5	(1992) Auxiliary Locks & Associated Products
BHMA ANSI/BHMA A156.6	(1994) Architectural Door Trim
BHMA ANSI/BHMA A156.7	(1988) Template Hinge Dimensions
~~BHMA ANSI/BHMA A156.13~~	~~(1994) Mortise Locks & Latches~~
BHMA ANSI/BHMA A156.15	(1995) Closer Holder Release Devices
BHMA ANSI/BHMA A156.16	(1989) Auxiliary Hardware
BHMA ANSI/BHMA A156.18	(1993) Materials and Finishes
BHMA ANSI/BHMA A156.21	(1989) Thresholds

DOOR AND HARDWARE INSTITUTE (DHI)

DHI-03	(1989) Keying Systems and Nomenclature
DHI-04	(1976) Recommended Locations for Builders' Hardware for Custom Steel Doors and Frames
DHI-05	(1990) Recommended Locations for Architectural Hardware for Standard Steel Doors and Frames
DHI-A115.IG	(1994) Installation Guide for Doors and Hardware
DHI A115-W	(Varies) Wood Door Hardware Standards (Incl All5-W1 thru A115-W9)

NATIONAL FIRE PROTECTION ASSOCIATION (NFPA)

NFPA 80	(1995) Fire Doors and Windows
NFPA 101	<CHG>(1997) Safety to Life from Fire in Buildings and Structures
NFPA 105	(1993) Installation of Smoke-Control Door Assemblies

1.2 SUBMITTALS

Government approval is required for submittals with a "GA" designation; submittals having an "FIO" designation are for information only. The following shall be submitted in accordance with Section 01300 SUBMITTAL PROCEDURES:

SD-01 Data

Hardware and Accessories; FIO.

Manufacturer's descriptive data, technical literature, catalog cuts, and installation instructions. Spare parts data for locksets, exit devices, closers, after approval of the detail drawings, and not later than 3 month(s) prior to the date of beneficial occupancy. The data shall include a complete list of parts and supplies, with current unit prices and source of supply.

SD-07 Schedules

Hardware Schedule; .

Hardware schedule listing all items to be furnished. The schedule shall include for each item: the quantities; manufacturer's name and catalog numbers; the ANSI number specified, sizes; detail information or catalog cuts; finishes; door and frame size and materials; location and hardware set identification cross-references to drawings; corresponding reference standard type number or function number from manufacturer's catalog if not covered by ANSI or BHMA; and list of abbreviations and template numbers.

Keying Schedule; GA.

Keying schedule developed in accordance with DHI-03, after the keying meeting with the user.

SD-13 Certificates

Hardware and Accessories; FIO.

The hardware manufacturer's certificates of compliance stating that the supplied material or hardware item meets specified requirements. Each certificate shall be signed by an official authorized to certify in behalf of the product manufacturer and shall identify quantity and date or dates of shipment or delivery to which the certificates apply. A statement that the proposed hardware items appear in BHMA-01, BHMA-02 and BHMA-03 directories of certified products may be submitted in lieu of certificates.

1.3 DELIVERY, STORAGE, AND HANDLING

Hardware shall be delivered to the project site in the manufacturer's original packages. Each article of hardware shall be individually packaged in the manufacturer's standard commercial carton or container, and shall be properly marked or labeled to be readily identifiable with the approved hardware schedule. Each change key shall be tagged or otherwise identified with the door for which its cylinder is intended. Manufacturer's printed installation instructions, fasteners, and special tools shall be included in each package.

1.4 SPECIAL TOOLS

Special tools, such as those supplied by the manufacturer, unique wrenches, and dogging keys, shall be provided as required to adjust hardware items.

1.5 WARRANTY

Manufacturer's standard performance guarantees or warranties that extend beyond a one year period shall be provided.

1.6 OPERATION AND MAINTENANCE MANUALS

Six complete copies of maintenance instructions listing routine maintenance procedures, possible breakdowns and repairs, and troubleshooting guides shall be provided. The instructions for electric locks, electric strikes, electro-magnetic closer holder release devices, and electric exit devices shall include simplified diagrams as installed.

PART 2 PRODUCTS

2.1 GENERAL HARDWARE REQUIREMENTS

Hardware shall conform to the requirements specified herein and the HARDWARE SETS listing at the end of this section. Hardware set numbers correspond to the set numbers shown on the drawings.

2.2 TEMPLATES

Requirements for hardware to be mounted on metal doors or metal frames shall be coordinated between hardware manufacturer and door or frame manufacturer by use of templates and other information to establish location, reinforcement required, size of holes, and similar details. Templates of hinges shall conform to BHMA ANSI/BHMA A156.7.

2.3 HINGES

Hinges shall conform to BHMA ANSI/BHMA A156.1. Hinges used on metal doors and frames shall also conform to BHMA ANSI/BHMA A156.7. Except as otherwise specified, hinge sizes shall conform to the hinge manufacturer's printed recommendations.

2.3.1 Hinges for Reverse Bevel Doors with Locks

Hinges for reverse bevel doors with locks shall have pins that are made nonremovable by means such as a set screw in the barrel, or safety stud, when the door is in the closed position.

2.3.2 Contractor's Option

Hinges with antifriction bearings may be furnished in lieu of ball bearing hinges, except where prohibited for fire doors by the requirements of NFPA 80.

2.4 LOCKS AND LATCHES

2.4.1 Mortise Lock and Latchsets

Bored lock, latchsets, and strikes shall be 4000 series and shall conform to BHMA ANSI/BHMA 156.2, Security Grade 1. Bored type locks and latches for doors 35 mm thick and over shall have adjustable bevel fronts or otherwise conform to the shape of door. Bored locksets shall be Best 93K series with core KSP or Falcon FLX 511 with CB 800 cores.~~Mortise lock, latchsets, and strikes shall be series 1000 and shall conform to BHMA ANSI/BHMA A156.13, operational Grade 1. Mortise type locks and latches for doors 44 mm thick and over shall have adjustable bevel fronts or otherwise conform to the shape of the door. Mortise locks shall have armored fronts.~~

2.4.2 Lock Cylinders (Mortise, Rim and Bored)

Lock cylinders shall comply with BHMA ANSI/BHMA A156.5. Lock cylinder shall have not less than seven pins. Cylinders shall have key removable type cores. An extension of the existing keying system shall be provided. The cylinders shall be compatible with existing locks that were manufactured by Best, have interchangeable cores. A construction master keying system Construction interchangeable cores shall be provided. Disassembly of lockset shall not be required to remove core from lockset. All locksets, lockable exit devices, shall accept same interchangeable cores.

2.4.3 Push/Pull Latches

2.4.4 Lock Trim

Lock trim shall be heavy wrought construction of commercial plain design. In addition to meeting the test requirement of BHMA ANSI/BHMA A156.13, lever handles, escutcheons shall be 1.27 mm thick, if unreinforced. If reinforced, the outer shell shall be 0.89 mm thick and the combined thickness shall be 1.78 mm except that knob shanks shall be 1.52 mm thick.

2.5 EXIT DEVICES AND EXIT DEVICE ACCESSORIES

Exit devices and exit device accessories shall conform to BHMA ANSI/BHMA A156.3, Grade 1.

2.5.1 Exit Devices and Auxiliary Items

Trim shall be of wrought construction and commercial plain design with straight, beveled, or smoothly rounded sides, corners, and edges. Adjustable strikes shall be provided for rim type and vertical rod devices. Touch bars may shall be provided in lieu of conventional crossbars and arms. Escutcheons shall be provided not less than 175 by 55 mm. Escutcheons shall be cut to suit cylinders and operating trim.

2.5.2 Removable Mullions

Removable mullions shall be Type 22 of the box type and shall be used only with those exit devices for which the mullions were manufactured. Mullions shall be furnished with mullion stabilizers of the same manufacturer.

2.6 KEYING

Locks shall be keyed in sets or subsets as scheduled. Locks shall be interchangeable core, Best style furnished with the manufacturer's standard construction key system. Change keys for locks shall be stamped with change number and the inscription "U.S. Property - Do Not Duplicate." Pinning codes shall be issued by Public Works Lock Shop Supervisor. Keys shall be supplied as follows:

Locks:	3 change keys each lock.
Master keyed sets:	5 keys each set.
Grand master keys:	3 total.
Control keys:	2 total.
Construction keys:	3 total.

The keys shall be furnished to the Public Works Lock Shop Supervisor ~~Contracting Officer~~ arranged for key control system storage in sets or subsets as scheduled.

2.7 DOOR CLOSING DEVICES

Door closing devices shall conform to BHMA ANSI/BHMA A156.4, Grade 1. Closing devices shall be products of one manufacturer for each type specified. The opening resistance of closing devices shall not exceed 67 N applied at the latch stile or exceed 22 N where low opening resistance is scheduled. Door closing device shall have built-in hold open and function on all non-rated doors.

2.7.1 Surface Type Closers

Surface type closers shall be Grade 1, Series C02000 Standard Cover with options PT-4H, Size 1 or 2 through Size 6, and PT-4D with back check position valve. Except as otherwise specified, sizes shall conform to the manufacturer's published recommendations. Closers for outswinging exterior doors shall have parallel arms. Closers for doors close to a wall shall be of narrow projection so as not to strike the wall at the 90-degree open position. Surface type closers shall have built-in hold open and function on all non-rated doors.

2.8 SMOKE DETECTORS AND ELECTRO-MAGNETIC HOLDERS

Electro-magnetic door holders shall conform to BHMA ANSI/BHMA A156.15 and shall release the door upon activation of the building fire alarm system. The door shall be released upon activation of the detector or interruption of electric power.

2.9 ARCHITECTURAL DOOR TRIM

Architectural door trim shall conform to BHMA ANSI/BHMA A156.6.

2.9.1 Door Protection Plates

2.9.1.1 Kick Plates

Kick plates shall be Type J102 stainless steel. Width of plates shall be 50 mm less than door width. Height shall be 250 mm, except where the bottom rail is less than 250 mm the plate shall extend to within 13 mm of the panel mold or glass bead. Edges of metal plates shall be beveled.

2.9.2 Push Plates

2.9.2.1 Combination Push-Pull Plates

Combination push-pull plates shall be Type J303, 1.27 mm thick minimum stainless steel beveled four edges.

2.9.3 Door Pulls and Push/Pull Units

2.9.3.1 Door Pulls

Door pulls shall be Category J400 stainless steel of plain modern design. Pulls for hollow metal, mineral core wood or kalamein doors shall be Type J405 thru-bolted to Type J301 flat push plates.

2.9.4 Push and Pull Bars

Push and pull bars shall be Category J500, stainless steel. Edges of mounting plates shall be square beveled.

2.10 AUXILIARY HARDWARE

Auxiliary hardware, consisting of door stops, shall conform to BHMA ANSI/BHMA A156.16. Lever extension flush bolts shall be Type L04081.

2.11 MISCELLANEOUS

2.11.1 Metal Thresholds

Thresholds shall conform to BHMA ANSI/BHMA A156.21. Thresholds for exterior doors shall be extruded aluminum of the type indicated and shall provide proper clearance and an effective seal with specified weather stripping. Where required, thresholds shall be modified to receive projecting bolts of flush bolts or exit devices. Thresholds for doors accessible to the handicapped shall be beveled with slopes not exceeding 1:2 and with heights not exceeding 13 mm.

2.11.2 Rain Drips

Extruded aluminum, not less than 1.78 mm thick, clear anodized. Door sill rain drips shall be 38 mm to 44 mm high by 16 mm projection. Overhead rain drips shall be approximately 38 mm high by 63 mm projection and shall extend 50 mm on either side of the door opening width.

2.11.3 Aluminum Housed Type Weatherseals

Weatherseals of the type indicated shall consist of extruded aluminum retainers not less than 1.78 mm wall thickness with vinyl, neoprene, silicone rubber, polyurethane or vinyl brush inserts. Aluminum shall be clear (natural) anodized. Weatherseal material shall be of an industrial/commercial grade. Seals shall remain functional through all weather and temperature conditions. Air leakage rate of weatherstripping shall not exceed 0.775 liters per second per lineal meter of crack when tested in accordance with ASTM E 283 at standard test conditions.

2.11.4 Key Control Storage System

Key control storage system shall conform to BHMA ANSI/BHMA A156.5, Type 3TAG, capacity 150%, and shall be properly labeled for key identification. Set up, identification labeling and location of the key control storage shall be as directed at the Predelivery Conference.

2.12 FASTENINGS

Fastenings of proper type, size, quantity, and finish shall be supplied with each article of hardware. Machine screws and expansion shields shall be used for attaching hardware to concrete or masonry. Fastenings exposed to the weather in the finished work shall be of brass, bronze, or stainless steel. Sex bolts, through bolts, or machine screws and grommet nuts, where used on reverse-bevel exterior doors equipped with half-surface or full-surface hinges, shall employ one-way screws or other approved tamperproof screws. Screws for the jamb leaf of half-mortise and full-surface hinges attached to structural steel frames shall be one-way or other approved tamperproof type.

2.13 FINISHES

Unless otherwise specified, finishes shall conform to those identified in BHMA ANSI/BHMA A156.18. Where painting of primed surfaces is required, painting is specified in Section 09900 PAINTING, GENERAL.

2.14 HARDWARE FOR FIRE DOORS

Hardware for fire doors shall conform to the requirements of NFPA 80and NFPA 101.

PART 3 EXECUTION

3.1 APPLICATION

Hardware shall be located in accordance with DHI-04 and DHI-05, except that deadlocks shall be mounted 1220 mm above finish floor. When approved, slight variations in locations or dimensions will be permitted. Application shall be in accordance with DHI-A115.IG or DHI A115-W. Door control devices for exterior doors such as closers and holders, shall be attached to doors with thru bolts and nuts or sex bolts. Alternate fastening methods may be approved by the Contracting Officer when manufacturers' documentation is submitted to verify that the fastening devices and door reinforcements are adequate to resist wind induced stresses. Electric hardware items and access control devices shall be installed in accordance with manufacturer's printed installation procedures.

3.1.1 Hardware for Fire Doors and Smoke-Control Door Assemblies

Hardware for fire doors shall be installed in accordance with the requirements of NFPA 80. Exit devices installed on fire doors shall have a visible label bearing the marking "Fire Exit Hardware". Other hardware installed on fire doors, such as locksets, closers, and hinges shall have a visible label or stamp indicating that the hardware items have been approved by an approved testing agency for installation on fire-rated doors. Hardware for smoke-control door assemblies shall be installed in accordance with NFPA 105.

3.1.2 Door-Closing Devices

Door-closing devices shall be installed and adjusted in accordance with the templates and printed instructions supplied by the manufacturer of the devices. Insofar as practicable, doors opening to or from halls and corridors shall have the closer mounted on the room side of the door.

3.1.3 Key Control Storage Systems

Key control storage system shall be installed where directed.

3.1.4 Kick Plates

Kick plates shall be installed on the push side of single-acting doors and on both sides of double-acting doors.

3.1.5 Auxiliary Hardware

Lever extension flush bolts shall be installed at the top and bottom of the inactive leaf of pairs of doors. The bottom bolt shall operate into a dust-proof floor strike or threshold.

3.1.6 Thresholds

Thresholds shall be secured with a minimum of three fasteners per single door width and six fasteners per double door width with a maximum spacing of 300 mm. Exterior thresholds shall be installed in a bed of sealant with expansion anchors and stainless steel screws, except that bronze or anodized bronze thresholds shall be installed with expansion anchors with brass screws. Minimum screw size shall be No. 10 length, dependent on job conditions, with a minimum of 19 mm thread engagement into the floor or anchoring device used.

3.1.7 Rain Drips

Door sill rain drips shall align with the bottom edge of the door. Overhead rain drips shall align with bottom edge of door frame rabbet. Drips shall be set in sealant and fastened with stainless steel screws.

3.1.8 Weatherseals

Weatherseals shall be located as indicated, snug to door face and fastened in place with color matched metal screws after door and frames have been finish painted. Screw spacing shall be as recommended by manufacturer.

3.1.9 Gasketing

Gasketing shall be installed at the inside edge of the hinge and head and latch sides of door frame. Frames shall be toleranced for a 3 mm clearance between door and frame. Frames shall be treated with tape primer prior to installation.

3.2 OPERATIONAL TESTS

Prior to acceptance of any electrical hardware system, an operational test shall be performed to determine if devices are operating as intended by the specifications. Wiring shall be tested for correct voltage, current carrying capacity, and proper grounding. Stray voltages in lock wiring shall be eliminated to prevent locking devices from releasing in critical situations.

3.3 HARDWARE SETS

SET NO. 1

6 - Ea. Hinges A8111 - 114mm x 114mm x 641 x NRP
1 - Exit Device Type 6 x 12 x DK BRZ
1 - Cylinder (Type Required) x 613 Best Keyway
1 - Exit Device Type 6 x 01 x DK BRZ
2 - Pulls J402 x 613
2 - Closers C02062~~2~~1 x PT4G x 690
2 - Drop Plates (Type Required) x 690
2 - Stops L02121 x 613
2 - Door Bottoms 315DN x D.W. x S.M.S. Pemko
1 - Threshold J32130 x D.W.

Note: Weatherstrip by door supplier

SET NO. 2

6 - Ea. Hinges A8111 - 114mm x 114mm x 641
2 - Push/Pull Bars J402 x J501 x 613
2 - Closers C02062~~2~~1 x PT4G x 690
2 - Drop Plates (Type Required) x 690
2 - Stops L02121 x 613

SET NO. 3

3 - Ea. Hinges A8112 - 114mm x 114mm x 652
1 - Lockset F81~~04~~ x 626
1 - Cylinder 1E74 x 626 Best Keyway
1 - Stop L02141 x 626
3 - Silencers L03011

SET NO. 4

3 - Ea. Hinges A8112 - 114mm x 114mm x 652
1 - Lockset F86~~07~~ x 626
1 - Cylinder 1E74 x 626 Best Keyway
1 - Stop L02141 x 626
3 - Silencers L03011

SET NO. 5

3 - Ea. Hinges A8112 - 114mm x 114mm x 652
1 - Push Plate J301 x 626
1 - Pull Plate J401 x J301 x 626
1 - Closer C02062~~2~~1 x 689
1 - Kick Plate J102 - (254mm x D.W. -50mm) x 630
1 - Stop L02141 x 626
3 - Silencers L03011

SET NO. 6

6	-	Ea. Hinges A8111 - 114mm x 114mm x 652 x NRP	
2	-	Flush Bolts L04081 x 626	
1	-	Dust Proof Strike L04011 x 626	
1	-	Lockset F812 x 626	
1	-	Cylinder 1E74 x 626	Best Keyway
2	-	Closers C02061 x PT4G x 689	
2	-	Stops L02121 x 626	
1	-	Set Weatherstrip 306AV - (Head & Jamb)	Pemko
2	-	Door Bottoms 315CN x D.W. x S.M.S.	Pemko
1	-	Threshold J32130 x D.W. x E.S.	
1	-	Astragal Seal S88 x Jamb	Pemko

Note: Astragal by door supplier.

SET NO. 7

3	-	Ea. Hinges A8111 - 114mm x 114mm x 652 x NRP	
1	-	Exit Device Type 1 x 09 x 626	
1	-	Cylinder (Type Required) x 626	Best Keyway
1	-	Closer C02062 1 x PT4G x 689	
1	-	Kick Plate J102 - (254mm x D.W. -50mm) x 630	
1	-	Stop L02121 x 626	
1	-	Set Weatherstrip 306AV - (Head & Jamb) x S.M.S.	Pemko
1	-	Door Bottom 3452AV x D.W. x S.M.S.	Pemko
1	-	Threshold J32130 x D.W. x E.S.	
1	-	Overhead Rain Drip 346C x D.W. + 101mm x S.M.S.	Pemko

SET NO. 8

6	-	Ea. Hinges A8111 - 114mm x 114mm x 652 x NRP	
1	-	Removable Mullion Type 22	
1	-	Exit Device Type 1 x 08 x 626	
1	-	Cylinder (Type Required) x 626	Best Keyway
1	-	Exit Device Type 1 x 02 x 626	
2	-	Closers C02062 1 x PT4G x 689	
2	-	Kick Plates J102 - (254mm x D.W. -50mm) x 630	
2	-	Stops L02121 x 626	
2	-	Sets Weatherstrip 306AV - (Head & Jamb) x S.M.S.	Pemko
2	-	Door Bottoms 3452AV x D.W. x S.M.S.	Pemko
1	-	Threshold J32130 x D.W. x E.S.	
1	-	Overhead Rain Drip 346C x D.W. + 101mm x S.M.S.	Pemko

(Omit door 140A)

SET NO. 9

No hardware required.

SET NO. 10

3 - Ea. Hinges A8112 - 114mm x 114mm x 652
1 - Lockset F84~~05~~ x 626
1 - Cylinder 1E74 x 626 Best Keyway
1 - Closer C02062~~2~~1 x 689
1 - Kick Plate J102 - (254mm x D.W. -50mm) x 630
1 - Stop L02141 x 626
3 - Silencers L03011

SET NO. 11

6 - Ea. Hinges A8111 - 114mm x 114mm x 652
2 - Push Plates J301 x 626
2 - Pull Plates J401 x J301 x 626
2 - Closers C02062~~2~~1 x PT4G x 689
2 - Kick Plates J102 - (254mm x D.W. -50mm) x 630
2 - Stops L02021 x 626
4 - Silencers L03011

SET NO. 12

6 - Ea. Hinges A8112 - 114mm x 114mm x 652
2 - Flush Bolts L04081 x 626
1 - Dust Proof Strike L04011 x 626
1 - Lockset F84~~05~~ x 626
1 - Cylinder 1E74 x 626 Best Keyway
2 - Closers C02061 x PT4G x 689
2 - Kick Plates J102 - (254mm x D.W. -50mm) x 630
2 - Stops L02021 x 626
4 - Silencers L03011
1 - Cipher lock (Dr #139 only) L1021 x 26D w/ 1 cylinder core
1 - Astragal (Dr #142A & 142B)

SET NO. 13

6 - Ea. Hinges A8112 - 114mm x 114mm x 652
2 - Push Plates J301 x 626
2 - Closers C02062~~2~~1 x PT4G x 689
2 - Kick Plates J102 - (254mm x D.W. -50mm) x 630
2 - Stops L02021 x 626
4 - Silencers L03011

SET NO. 14

6 - Ea. Hinges A8111 - 114mm x 114mm x 652
2 - Fire Rated Exit Devices Type 2 x 01 x 626
2 - Closers C02021 x 689
2 - Kick Plates J102 - (254mm x D.W. -50mm) x 630
2 - Wall Magnets
4 - Silencers L03011

Note: Wall magnets tied into fire system.

SET NO. 15

3 - Ea. Hinges A8112 - 114mm x 114mm x 652
1 - Privacy F76~~19~~ x 626
1 - Closer C02062~~2~~1 x 689
1 - Kick Plate J102 - (254mm x D.W. -50mm) x 630
1 - Stop L02021 x 626
3 - Silencers L03011

END OF SECTION

SECTION 08810

GLASS AND GLAZING
05/97

PART 1 GENERAL

1.1 REFERENCES

The publications listed below form a part of this specification to the extent referenced. The publications are referred to in the text by basic designation only.

AMERICAN NATIONAL STANDARDS INSTITUTE (ANSI)

ANSI Z97.1	(1984; R 1994) Safety Performance Specifications and Methods of Test for Safety Glazing Materials Used in Buildings

AMERICAN SOCIETY FOR TESTING AND MATERIALS (ASTM)

ASTM C 509	(1994) Elastomeric Cellular Preformed Gasket and Sealing Material
ASTM C 864	(1993) Dense Elastomeric Compression Seal Gaskets, Setting Blocks, and Spacers
ASTM C 920	(1995) Elastomeric Joint Sealants
ASTM C 1036	(1991) Flat Glass
ASTM C 1048	(1992) Heat-Treated Flat Glass - Kind HS, Kind FT Coated and Uncoated Glass
ASTM D 395	(1989; R 1994) Rubber Property - Compression Set
ASTM E 773	(1988) Seal Durability of Sealed Insulating Glass Units
ASTM E 774	(1992) Sealed Insulating Glass Units
ASTM E 1300	(1994) Determining the Minimum Thickness and Type of Glass Required to Resist a Specified Load

GLASS ASSOCIATION OF NORTH AMERICA (GANA)

GANA-01	(1990) Glazing Manual
GANA-04	(1995) Engineering Standards Manual

1.2 SUBMITTALS

Government approval is required for submittals with a "GA" designation; submittals having an "FIO" designation are for information only. The following shall be submitted in accordance with Section 01300 SUBMITTAL PROCEDURES:

SD-01 Data

Glass; FIO. Glazing Accessories; FIO.

Manufacturer's descriptive product data, handling and storage recommendations, installation instructions, and cleaning instructions.

SD-04 Drawings

Glazing Materials and Accessories; FIO.

Drawings showing complete details of the proposed setting methods, mullion details, edge blocking, size of openings, frame details, materials, and types and thickness of glass.

SD-13 Certificates

Glass; FIO.

Certificates stating that the glass meets the specified requirements. Labels or manufacturers marking affixed to the glass will be accepted in lieu of certificates.

SD-14 Samples

Glass; FIO.

Two 203 x 254 mm samples of each of the following: tinted glass, and insulating glass units.

1.3 SYSTEM DESCRIPTION

Glazing systems shall be fabricated and installed watertight and airtight to withstand thermal movement and wind loading without glass breakage, gasket failure, deterioration of glazing accessories, and defects in the work. Glazed panels shall comply with the safety standards, as indicated in accordance with ANSI Z97.1. Glazed panels shall comply with indicated wind/snow loading in accordance with ASTM E 1300.

1.4 DELIVERY, STORAGE AND HANDLING

Glazing compounds shall be delivered to the site in the manufacturer's unopened containers. Glass shall be stored indoors in a safe, well ventilated dry location in accordance with manufacturer's instructions, and shall not be unpacked until needed for installation. Glass shall not be stored on site over 1 month.

1.5 PROJECT/SITE CONDITIONS

Glazing work shall not be started until outdoor temperature is above 5 degrees C and rising, unless procedures recommended by glass manufacturer and approved by Contracting Officer are made to warm the glass and rabbet

surfaces. Ventilation shall be provided to prevent condensation of moisture on glazing work during installation. Glazing work shall not be performed during damp or raining weather.

1.6 WARRANTY

1.6.1 Insulating Glass

Manufacturer shall warrant the insulating glass to be free of fogging or film formation on the internal glass surfaces caused by failure of the hermetic seal for a period of 10 years from Date of Substantial Completion. Warranty shall be signed by manufacturer.

PART 2 PRODUCTS

2.1 INSULATING GLASS

Insulating glass shall be Class A preassembled units of dual-seal construction consisting of lites of glass separated by an aluminum spacer and dehydrated space conforming to ASTM E 773 and ASTM E 774. Aluminum spacer shall be roll-formed, with bent or tightly soldered joints to completely seal the spacer periphery and eliminate moisture and hydrocarbon vapor transmission into airspace through the corners. Primary seal shall be compressed polyisobutylene and the secondary seal shall be a specially formulated silicone. Insulated glazing shall have a maximum "U" value of 3.123 W/s.m./K. Glass types shall be as follows:

2.1.1 Tinted Insulating Glass

Outer pane of glass for two-pane insulating units shall be kind FT fully tempered transparent flat type, Class 2-tinted, Quality q3 - glazing select, conforming with ASTM C 1036. Tint shall be solar bronze.
Inner pane of glass shall be kind FT fully tempered transparent flat type, Class 1 - clear, Quality q3 - glazing select, conforming to ASTM C 1036.

2.1.2 Clear Insulating Glass

Outer pane of glass for two-pane insulating units shall be kind FT fully tempered transparent flat type, Class 1-clear, Quality q3 - glazing select, conforming with ASTM C 1036. Inner pane of glass shall be kind FT fully tempered transparent flat type, Class 1 - clear, Quality q3 - glazing select, conforming to ASTM C 1036.

2.2 HEAT-TREATED GLASS

Heat-treated glass shall conform to the following requirements.

2.2.1 Tinted Tempered Glass

Tempered glass shall be kind FT fully tempered transparent flat type, Class 1-clear and Class 2-tinted as indicated on the Drawings, Condition A uncoated surface, Quality q3 - glazing select, conforming to ASTM C 1048 and GANA-04. Color shall be solar bronze.

2.3 GLAZING ACCESSORIES

2.3.1 Preformed Tape

Preformed tape shall be elastomeric rubber extruded into a ribbon of a width and thickness suitable for specific application. Tape shall be of type which will remain resilient, have excellent adhesion, and be chemically compatible to glass, metal, or wood.

2.3.2 Sealant

Sealant shall be elastomeric conforming to ASTM C 920, Type S or M, Grade NS, Class 12.5, Use G, of type chemically compatible with setting blocks, preformed sealing tape and sealants used in manufacturing insulating glass. Color of sealant shall be as selected.

2.3.3 Glazing Gaskets

Glazing gaskets shall be extruded with continuous integral locking projection designed to engage into metal glass holding members to provide a watertight seal during dynamic loading, building movements and thermal movements. Glazing gaskets for a single glazed opening shall be continuous one-piece units with factory-fabricated injection-molded corners free of flashing and burrs. Glazing gaskets shall be in lengths or units recommended by manufacturer to ensure against pull-back at corners. Glazing gasket profiles shall be as indicated on drawings.

2.3.3.1 Fixed Glazing Gaskets

Fixed glazing gaskets shall be closed-cell (sponge) smooth extruded compression gaskets of cured elastomeric virgin neoprene compounds conforming to ASTM C 509, Type 2, Option 1.

2.3.3.2 Wedge Glazing Gaskets

Wedge glazing gaskets shall be high-quality extrusions of cured elastomeric virgin neoprene compounds, ozone resistant, conforming to ASTM C 864, Option 1, Shore A durometer between 65 and 75.

2.3.4 Setting and Edge Blocking

Neoprene setting blocks shall be dense extruded type conforming to ASTM D 395, Method B, Shore A durometer between 70 and 90. Edge blocking shall be Shore A durometer of 50 (+ or - 5). Silicone setting blocks shall be required when blocks are in contact with silicone sealant. Profiles, lengths and locations shall be as required and recommended in writing by glass manufacturer.

PART 3 EXECUTION

3.1 PREPARATION

Openings and framing systems scheduled to receive glass shall be examined for compliance with approved shop drawings, GANA-01 and glass manufacturer's recommendations including size, squareness, offsets at corners, presence and function of weep system, face and edge clearance requirements and effective sealing between joints of glass-framing members. Detrimental materials shall

be removed from glazing rabbet and glass surfaces and wiped dry with solvent. Glazing surfaces shall be dry and free of frost.

3.2 INSTALLATION

Glass and glazing work shall be performed in accordance with approved shop drawings, GANA-01, glass manufacturer's instructions and warranty requirements. Glass shall be installed with factory labels intact and removed only when instructed. Edges and corners shall not be ground, nipped or cut after leaving factory. Springing, forcing or twisting of units during installation will not be permitted.

3.3 CLEANING

Upon completion of project, outside surfaces of glass shall be washed clean and the inside surfaces of glass shall be washed and polished in accordance with glass manufacturer's recommendations.

3.4 PROTECTION

Glass work shall be protected immediately after installation. Glazed openings shall be identified with suitable warning tapes, cloth or paper flags, attached with non-staining adhesives. Reflective glass shall be protected with a protective material to eliminate any contamination of the reflective coating. Protective material shall be placed far enough away from the coated glass to allow air to circulate to reduce heat buildup and moisture accumulation on the glass. Glass units which are broken, chipped, cracked, abraded, or otherwise damaged during construction activities shall be removed and replaced with new units.

End of Section

SECTION 09250

GYPSUM WALLBOARD
06/97

PART 1 GENERAL

1.1 REFERENCES

The publications listed below form a part of this specification to the extent referenced. The publications are referred to in the text by basic designation only.

AMERICAN SOCIETY FOR TESTING AND MATERIALS (ASTM)

ASTM A 580	(1995a) Stainless and Heat Resisting Steel Wire
ASTM A 853	(1993) Steel Wire, Carbon, for General Use
ASTM B 164	(1993) Nickel-Copper Alloy Rod, Bar, and Wire
ASTM C 36	(1995) Gypsum Wallboard
ASTM C 79	(1994) Gypsum Sheathing Board
ASTM C 475	(1994) Joint Compound and Joint Tape for Finishing Gypsum Board
ASTM C 630	(1996a) Water-Resistant Gypsum Backing Board
ASTM C 645	(1995) Non-Load (Axial) Bearing Steel Studs, Runners (Track), and Rigid Furring Channels for Screw Application of Gypsum Board
ASTM C 754	(1996) Installation of Steel Framing Members to Receive Screw-Attached Gypsum Board
ASTM C 840	(1996) Application and Finishing of Gypsum Board
ASTM C 1002	(1996a) Steel Drill Screws for the Application of Gypsum Board or Metal Plaster Bases
ASTM C 1047	(1994) Accessories for Gypsum Wallboard and Gypsum Veneer Base

GYPSUM ASSOCIATION (GA)

GA 216	(1996) Application and Finishing of Gypsum Board
GA 600	(1994) Fire Resistance Design Manual

UNDERWRITERS LABORATORIES (UL)

UL-05 (1997) Fire Resistance Directory

1.2 SYSTEM DESCRIPTION

1.2.1 Fire-Rated Construction

Joints of fire-rated gypsum board enclosures shall be closed and sealed in accordance with UL test requirements or GA requirements, and as required to meet pressurization requirements. Penetrations through rated partitions and ceilings shall be sealed tight in accordance with tested systems. Fire ratings shall be as indicated.

1.3 SUBMITTALS

Government approval is required for submittals with a "GA" designation; submittals having an "FIO" designation are for information only. The following shall be submitted in accordance with Section 01300 SUBMITTAL PROCEDURES:

SD-04 Drawings

Steel Framing; FIO. Control Joints; FIO. Fire-Resistant Assemblies; FIO.

Drawings and installation details for ceiling framing, furring, special wall framing, and framed openings in walls and ceilings.

SD-13 Certificates

Gypsum Wallboard; FIO. Steel Framing; FIO. Fire-Rated Gypsum Board; FIO.

Certificates stating that the steel framing and gypsum wallboard meet the specified requirements.

1.4 QUALIFICATIONS

Manufacturer shall specialize in manufacturing the types of material specified and shall have a minimum of 5 years of documented successful experience. Installer shall specialize in the type of gypsum board work required and shall have a minimum of 3 years of documented successful experience.

1.5 DELIVERY, STORAGE AND HANDLING

Materials shall be delivered in original containers bearing the name of manufacturer, contents, and brand name. Materials shall be stored off the ground in a weathertight structure for protection. Gypsum boards shall be stacked flat, off floor and supported to prevent sagging and warpage. Adhesives and joint materials shall be stored in accordance with manufacturer's printed instructions. Damaged or deteriorated materials shall be removed from jobsite.

1.6 ENVIRONMENTAL CONDITIONS

Environmental conditions for application and finishing of gypsum board shall be in accordance with ASTM C 840. During the application of gypsum board

without adhesive, a room temperature of not less than 4 degrees C shall be maintained. During the application of gypsum board with adhesive, a room temperature of not less than 10 degrees C shall be maintained for 48 hours prior to application and continuously afterwards until completely dry. Building spaces shall be ventilated to remove water not required for drying joint treatment materials. Drafts shall be avoided during dry hot weather to prevent materials from drying too rapidly.

PART 2 MATERIALS

2.1 NON-LOADBEARING STUD WALLS

2.1.1 Studs

Studs for non-loadbearing walls shall conform to ASTM C 645. Studs shall be C-shaped, roll formed steel with minimum uncoated design thickness of 0.084 mm (0.0329 in) made from G40 hot-dip galvanized coated sheet.

2.1.2 Runner Tracks

Floor and ceiling runner tracks shall conform to ASTM C 645. Tracks shall be prefabricated, U-shaped with minimum 25 mm flanges, unpunched web, thickness to match studs, made from G40 hot-dip galvanized coated sheet.

2.2 SUSPENDED CEILING FRAMING

Carrying channels shall be formed from 1.40 mm thick cold-rolled steel, 38 x 19 mm. Furring members shall be formed from cold-rolled steel, 22 x 65 mm. Carrying channels and furring members shall be made from hot-dip galvanized coated sheet.

2.3 GYPSUM BOARD

Gypsum board shall have square-cut ends, tapered or beveled edges and shall be maximum possible length. Gypsum board thickness shall be as shown.

2.3.1 Standard Gypsum Board

Regular gypsum board shall conform to ASTM C 36, and shall be 1200 mm wide.

2.3.2 Fire-Rated Gypsum Board

Fire-rated gypsum board shall conform to ASTM C 36, and shall be Type X or Type C as required, 1200 mm wide.

2.3.3 Water-Resistant Gypsum Board

Water-resistant gypsum board shall conform to ASTM C 630, regular or Type X as required, with water-resistant paper faces, paintable surfaces, and shall be 1200 mm width and maximum permissible length. Water-resistant gypsum board shall not be used on ceilings.

2.3.4 Exterior Sheathing Board

Exterior sheathing board shall conform to ASTM C 79, Type X, shall have water-resistant core, water-repellant paper faces each side, with tongue-and-groove edges, and be 600 mm wide, or square edges and 1200 mm wide.

2.4 TRIM, MOLDINGS, AND ACCESSORIES

2.4.1 Taping and Embedding Compound

Taping and embedding compound shall conform to ASTM C 475. Compound shall be specifically formulated and manufactured for use in embedding tape at gypsum wallboard joints and fastener heads, and shall be compatible with tape and substrate.

2.4.2 Finishing or Topping Compound

Finishing or topping compound shall conform to ASTM C 475. Compound shall be specifically formulated and manufactured for use as a finishing compound for gypsum board.

2.4.3 All-Purpose Compound

All-purpose compound shall be specifically formulated and manufactured to use as a taping and finishing compound, and shall be compatible with tape and substrate.

2.4.4 Joint Tape

Joint tape shall conform to ASTM C 475 and shall be as recommended by gypsum board manufacturer.

2.4.5 Trim, Control Joints, Beads, Stops and Nosings

Items used to protect edges, corners, and to provide architectural features shall be in accordance with ASTM C 1047.

2.5 FASTENINGS AND ADHESIVES

2.5.1 Screws

Screws shall conform to ASTM C 1002. Screws shall be self-drilling and self-tapping steel, Type G for gypsum board to gypsum board Type S for wood or light-gauge steel framing Type W for wood framing.

2.5.2 Hangers

Suspended ceiling runner channel hangers shall be soft, annealed steel wire not less than No. 8 SWG, conforming to ASTM A 853 or flat iron or steel straps, at least 2 x 22 mm size, coated with zinc, cadmium, or rust-inhibiting paint.

2.5.3 Wire and Clip Type Fastenings

Tie wire, clips, rings, and other fastenings shall be corrosion-resisting steel conforming to ASTM A 580, composition 302, 304, or 316, Condition A, or nickel-copper alloy conforming to ASTM B 164, annealed condition except that walls, partitions, and other vertical surfaces not incorporated in ceiling construction may be erected with soft, annealed steel conforming to ASTM A 853.

2.5.3.1 Tie Wire

Tie wire for constructing partitions and vertical furring, for securing metal lath to supports, and for lacing shall be not less than No. 18 SWG. Tie wire for other applications shall be not less than No. 16 SWG.

2.5.3.2 Clips

Clips used in lieu of tie wire for securing the furring channels to the runner channels in ceiling construction shall be made from strip not less than 3 mm thick or shall be hairpin clip, formed of wire not less than 0.4 mm nominal diameter. Other clips and rings or fastenings of similar materials shall be equivalent in holding power to that provided by tie wire for the specific application.

PART 3 EXECUTION

3.1 INTERIOR WALL FRAMING

Steel framing and furring members shall be installed in accordance with ASTM C 754. Members shall be in alignment with spacings not to exceed the maximum spacings indicated on drawings. Runners shall be aligned accurately at the floor and ceiling and securely anchored.

3.1.1 Wall Openings

The framing system shall provide for the installation and anchorage of the required subframes or finish frames for wall openings at doors, pass-through openings, and access panels. Partitions abutting continuous suspended ceilings shall be strengthened for rigidity at rough openings of more than 750 mm wide. Studs at openings shall be 0.84 mm (0.0329 in) minimum bare metal thickness and spot grouted at jamb anchor inserts. Double studs shall be fastened together with screws and secured to floor and overhead runners. Two studs placed back-to-back shall be used for framing solid-core doors, doors over 900 mm wide and extra-heavy doors such as X-ray room doors.

3.1.2 Wall Control Joints

Control joints for expansion and contraction in the walls shall be constructed with double studs installed 13 mm apart in interior walls or wall furrings where indicated on drawings. Control joint spacing shall not exceed 9 m. Ceiling-height door frames may be used as vertical control joints. Door frames of less than ceiling height may be used as control joints only if standard control joints extend to ceiling from both corners of top of door frame. Control joints between studs shall be filled with firesafing insulation in fire rated partitions.

3.2 SUSPENDED CEILING FRAMING

Suspended ceiling system framing shall be installed in accordance with ASTM C 754.

3.2.1 Hangers

Hangers shall be spaced not more than 1200 mm along runner channels and 900 mm in the other direction or 1050 mm in both directions unless otherwise indicated. Locations of hanger wires shall be coordinated with other work.

Hangers at ends of runner channels shall be located not more than 150 mm from wall. Hanger wire shall be looped around bottom chord of open-web steel joists, or secured to structural elements with suitable fasteners. Sags or twists which develop in the suspended system shall be adjusted. Damaged or faulty parts shall be replaced.

3.2.2 Main Runners

Main runner channels shall be installed in accordance with ASTM C 754. Hanger wires shall be double strand saddle-tied to runner channels and the ends of hanger wire shall be twisted three times around itself. Main runners shall be located to within 150 mm of the paralleling wall to support the ends of cross furring. Main runners shall not come in contact with abutting masonry or concrete walls. Where main runners are spliced, ends shall be overlapped 300 mm with flanges of channels interlocked, and shall be securely tied at each end of splice with wire looped twice around the channels.

3.2.3 Furring Channels

Furring channels shall be spaced in accordance with ASTM C 754. Furring channels shall be secured to the runner channels and to structural supports at each crossing with tie wire, hairpin clips, or equivalent fastenings. Furring channels shall be located within 50 mm of parallel walls and beams, and shall be cut 13 mm short of abutting walls.

3.2.4 Ceiling Openings

Support members shall be provided as required at ceiling openings for access panels, recessed light fixtures, and air supply or exhaust. Support members shall be not less than 38 mm main runner channels and vertically installed suspension wires or straps shall be located to provide at least the minimum support specified herein for furring and wallboard attachment. Intermediate structural members not a part of the structural system, shall be provided for attachment or suspension of support members.

3.2.5 Light Fixtures

Light fixtures shall not be supported directly from suspended ceiling runners. Hanger wires for recessed or surface mounted light fixtures shall be anchored to structure at four corners of light fixtures, and additional wires shall be provided at appropriate locations to carry the weight of light fixtures.

3.2.6 Control Joints

Ceiling control joints for expansion and contraction shall be located where indicated on drawings. A control joint or intermediate blocking shall be installed where ceiling framing members change direction.

3.2.6.1 Interior Ceilings With Perimeter Relief

Control joints shall be installed so that linear dimensions between control joints shall not exceed 15 m in either direction nor more than 230 square meters.

3.2.6.2 Interior Ceilings Without Perimeter Relief

Control joints shall be installed so that linear dimensions between control joints shall not exceed 9 m in either direction nor more than 84 square meters.

3.3 APPLICATION OF GYPSUM BOARD

Gypsum board shall be installed in accordance with ASTM C 840 and GA 216 and as specified. Edges and ends of gypsum boards shall be cut to obtain neat fitting joints. End joints of adjoining boards shall be staggered, and shall be staggered on opposite sides of wall. Boards shall be applied with moderate contact without forcing in place. Holes for pipes, fixtures or other small openings shall be cut with a tool which will provide a neat fit. Screws shall be driven so that the heads are slightly below the plane of paper face. Fracturing the paper face or damaging the core shall be avoided. Trim shall be installed at external and internal angles formed by the intersecting gypsum board surfaces with other surfaces. Corner beads shall be installed to vertical and horizontal corners in accordance with manufacturer's published instructions.

3.3.1 Backing Board

Gypsum board and water-resistant gypsum backing board used as a substrate to receive ceramic tile and wall panels shall be in accordance with ASTM C 840, System X.

3.3.2 Exterior Gypsum Sheathing

Exterior gypsum sheathing shall be flashed at openings so that water intrusion will not contact the sheathing. Vertical end and edge joints shall abut over the centers of framing members and shall be offset a minimum of one framing space between adjacent rows of gypsum sheathing. Sheathing shall be installed in accordance with manufacturer's instructions.

3.4 TRIM, MOLDINGS, AND ACCESSORIES INSTALLATION

Trim, moldings and accessories shall be installed in accordance with GA 216.

3.5 TAPING AND FINISHING

Gypsum board taping and finishing shall be performed in accordance with ASTM C 840. Boards shall be kept free of dirt, oil and other foreign matter that could cause a lack of bond. Screw heads, dents, gouges, and cut-outs shall be filled with joint compound and sanded. Accessories at exposed joints, edges, corners, openings, and similar locations shall be taped, floated with joint compound, and sanded to produce surfaces ready for gypsum board finishes.

3.6 FIRE-RESISTANT ASSEMBLIES

Gypsum wallboard construction for fire-rated assemblies shall be in accordance with UL-05, or GA 600 for the design number indicated on drawings.

3.7 PATCHING

Surface defects and damage shall be corrected as required to leave gypsum board smooth, uniform in appearance, and ready to receive finish as specified.

End of Section

SECTION 09310

CERAMIC TILE
10/94

PART 1 GENERAL

1.1 REFERENCES

The publications listed below form a part of this specification to the extent referenced. The publications are referred to in the text by basic designation only.

AMERICAN NATIONAL STANDARDS INSTITUTE (ANSI)

ANSI A108.1A	(1992) Installation of Ceramic Tile in the Wet-Set Method, with Portland Cement Mortar
ANSI A108.1B	(1992) Installation of Ceramic Tile on a Cured Portland Cement Mortar Setting Bed with Dry-Set or Latex Portland Cement Mortar
ANSI A108.5	(1992) Installation of Ceramic Tile with Dry-Set Portland Cement Mortar or Latex-Portland Cement Mortar
ANSI A108.6	(1992) Installation of Ceramic Tile with Chemical Resistant, Water Cleanable Tile-Setting and Grouting Epoxy
ANSI A108.8	(1992) Installation of Ceramic Tile with Chemical Resistant Furan Mortar and Grout
ANSI A108.10	(1992) Installation of Grout in Tilework
ANSI A118.1	(1992) Dry-Set Portland Cement Mortar
ANSI A118.3	(1992) Chemical Resistant, Water Cleanable Tile Setting and Grouting Epoxy and Water Cleanable Tile Setting Epoxy Adhesive
ANSI A118.4	(1992) Latex-Portland Cement Mortar
ANSI A137.1	(1988) Ceramic Tile

AMERICAN SOCIETY FOR TESTING AND MATERIALS (ASTM)

ASTM C 241	(1990) Abrasion Resistance of Stone Subjected to Foot Traffic
ASTM C 373	(1988; R 1994) Water Absorption, Bulk Density, Apparent Porosity, and Apparent Specific Gravity of Fired Whiteware Products

ASTM C 648	(1984; R 1994) Breaking Strength of Ceramic Tile
ASTM C 1026	(1987; R 1992) Measuring the Resistance of Ceramic Tile to Freeze-Thaw Cycling

MARBLE INSTITUTE OF AMERICA (MIA)

MIA-01	(1991) Design Manual IV Dimensional Stone

TILE COUNCIL OF AMERICA (TCA)

TCA-01	(1995) Handbook for Ceramic Tile Installation

1.2 SUBMITTALS

Government approval is required for submittals with a "GA" designation; submittals having an "FIO" designation are for information only. The following shall be submitted in accordance with Section 01300 SUBMITTAL PROCEDURES:

SD-01 Data

Tile; FIO. Setting-Bed; FIO. Mortar, Grout, and Adhesive; FIO.

Manufacturer's catalog data.

SD-06 Instructions

Tile; FIO. Mortar and Grout; FIO.

Manufacturers preprinted installation and cleaning instructions.

SD-09 Reports

Testing; FIO.

Copy of results for electrical resistance tests.

SD-13 Certificates

Tile; FIO. Mortar, Grout, and Adhesive; FIO.

Certificates indicating conformance with specified requirements. A master grade certificate shall be furnished for tile.

SD-14 Samples

Tile; FIO. Accent Strips; FIO. Marble Thresholds; FIO.

Samples of sufficient size to show color range, pattern, type and joints.

1.3 DELIVERY AND STORAGE

Materials shall be delivered to the project site in manufacturer's original unopened containers with seals unbroken and labels and hallmarks intact. Materials shall be kept dry, protected from weather, and stored under cover.

1.4 ENVIRONMENTAL REQUIREMENTS

Ceramic tile work shall not be performed unless the substrate and ambient temperature is at least 10 degrees C and rising. Temperature shall be maintained above 10 degrees C while the work is being performed and for at least 7 days after completion of the work. When temporary heaters are used they shall be vented to the outside to avoid carbon dioxide damage to new tilework.

1.5 WARRANTY

Manufacturer's standard performance guarantees or warranties that extend beyond a 1-year period shall be provided.

PART 2 PRODUCTS

2.1 TILE

Tile shall be standard grade conforming to ANSI A137.1. Containers shall be grade sealed. Seals shall be marked to correspond with the marks on the signed master grade certificate. Tile shall be impact resistant with a minimum breaking strength for wall tile of 41 kg and 113 kg for floor tile in accordance with ASTM C 648. Tile for cold climate projects shall be rated frost resistant by the manufacturer as determined by ASTM C 1026. Water absorption shall be 0.5 maximum percent in accordance with ASTM C 373.

2.1.1 Floor Tile

Floor mosaic tile and trim shall be glazed natural clay with cushion edges. Tile size shall be 200 x 200 mm. Color shall be as indicated on the Drawings.

2.1.2 Glazed Wall Tile

Glazed wall tile and trim shall be cushion edged with bright glaze. Tile shall be 25 x 25 mm. Color shall be as indicated on the Drawings.

2.1.2.1 Accent Strips

150 x 12.5 mm (6 x 1/2 inch) high gloss accent strips.

2.1.3 Exterior Glazed Tile

Tile shall be Chroma 2 as manufactured by Buchtal Corporation or equivalent. Tile shall be 100 mm x 100 mm x 6 mm. Each tile shall have 2 adjacent glazed edges. Color shall be as indicated on the Drawings.

a. Bond Strength (ASTM C 482): 565 psi.
b. Water Absorption (ASTM C 373): 1.6 percent
c. Freeze Thaw (ASTM C 1026): Pass
d. Color Measurement (ASTM C 609): 0.73 judds
e. Acid and Alkali Resistance (EN 106): Pass

2.2 WATER

Water shall be potable.

2.3 MORTAR, GROUT, AND ADHESIVE

Mortar, grout, and adhesive shall conform to the following:

2.3.1 Dry-Set Portland Cement Mortar

ANSI A118.1.

2.3.2 Latex-Portland Cement Mortar

ANSI A118.4.

2.3.3 Epoxy Resin Grout

ANSI A118.3.

2.4 MARBLE THRESHOLDS

Marble thresholds shall be of size required by drawings or conditions. Marble shall be Group A as classified by MIA-01. Marble shall have a fine sand-rubbed finish and shall be gray in color as approved by the Contracting Officer. Marble abrasion shall be not less than 12.0 when tested in accordance with ASTM C 241.

PART 3 EXECUTION

3.1 PREPARATORY WORK AND WORKMANSHIP

Surface to receive tile shall be inspected and shall conform to the requirements of ANSI A108.1A or ANSI A108.1B for surface conditions for the type setting bed specified and for workmanship. Variations of surface to be tiled shall fall within maximum values shown below:

TYPE	WALLS	FLOORS
Epoxy	3 mm in 2.4 meters	3.0 mm in 3 meters

3.2 GENERAL INSTALLATION REQUIREMENTS

Tile work shall not be started until roughing in for mechanical and electrical work has been completed and tested, and built-in items requiring membrane waterproofing have been installed and tested. Floor tile installation shall not be started in spaces requiring wall tile until after wall tile has been installed. Tile in colors and patterns indicated shall be applied in the area shown on the drawings. Tile shall be installed with the respective surfaces in true even planes to the elevations and grades shown. Special shapes shall be provided as required for sills, jambs, recesses, offsets, external corners, and other conditions to provide a complete and neatly finished installation. Tile bases and coves shall be solidly backed with mortar.

3.3 INSTALLATION OF WALL TILE

Wall tile shall be installed in accordance with the TCA-01, method W-242. Exterior glazed tile shall be installed in accordance with manufacturer's recommendations.

3.3.1 Furan Mortar and Grout

Furan mortar and grout installation shall conform to ANSI A108.8.

3.4 INSTALLATION OF FLOOR TILE

Floor tile shall be installed in accordance with TCA-01, method F-115. Shower receptors shall be installed in accordance with TCA-01, method B415.

3.4.1 Dry-Set and Latex-Portland Cement

Dry-set or Latex-portland cement mortar shall be used to install tile directly over properly cured, plane, clean concrete slabs in accordance with ANSI A108.5. Latex portland cement shall be used when installing porcelain ceramic tile.

3.4.2 Resinous Grout

Joints shall be raked and cleaned to the full depth of the tile and neutralized when recommended by the resinEpoxy resin grout shall be installed in conformance with ANSI A108.6. Recommended temperature shall be maintained in the area and on the surface to be grouted. After grouting, tile shall be left free of grout stain.

3.4.3 Ceramic Tile Grout

Ceramic Tile grout shall be prepared and installed in accordance with ANSI A108.10.

3.4.4 Waterproofing

Waterproofing under concrete fill shall conform to the requirements of Section 07112 BITUMINOUS WATERPROOFING.

3.5 INSTALLATION OF MARBLE THRESHOLDS

Thresholds shall be installed where indicated in a manner similar to that of the ceramic tile floor. Thresholds shall be the full width of the opening. Head joints at ends shall not exceed 6 mm in width and shall be grouted full as specified for ceramic tile.

3.6 CONTROL JOINTS

Joints shall be formed as indicated and sealed as specified in Section 07900 JOINT SEALING.

3.6.1 Walls

Control joints shall be provided at control joints in backing material. Wherever backing material changes, a control joint shall be formed to separate the different materials.

3.6.2 Floors

Control joints shall be provided over construction joints, control joints, and expansion joints in concrete slabs. Control joints shall also be provided where tile abuts restraining surfaces such as perimeter walls, curbs and columns and at intervals of 7.2 to 10.8 m each way in large interior floor areas and 3.6 to 4.8 m each way in large exterior areas or areas exposed to direct sunlight or moisture. Expansion joints shall extend through setting-beds and fill.

3.7 CLEANING AND PROTECTING

Upon completion, tile surfaces shall be thoroughly cleaned in accordance with manufacturer's approved cleaning instructions. Acid shall not be used for cleaning glazed tile. Floor tile with resinous grout or with factory mixed grout shall be cleaned in accordance with instructions of the grout manufacturer. After the grout has set, tile wall surfaces shall be given a protective coat of a noncorrosive soap or other approved method of protection. Tiled floor areas shall be covered with building paper before foot traffic is permitted over the finished tile floors. Board walkways shall be laid on tiled floors that are to be continuously used as passageways by workmen. Damaged or defective tiles shall be replaced.

End of Section

This page intentionally blank

SECTION 09510

ACOUSTICAL CEILINGS
08/96

PART 1 GENERAL

1.1 REFERENCES

The publications listed below form a part of this specification to the extent referenced. The publications are referred to in the text by basic designation only.

AMERICAN SOCIETY FOR TESTING AND MATERIALS (ASTM)

ASTM C 635	(1995) Manufacture, Performance, and Testing of Metal Suspension Systems for Acoustical Tile and Lay-In Panel Ceilings
ASTM C 636	(1992) Installation of Metal Ceiling Suspension Systems for Acoustical Tile and Lay-In Panel Ceilings
ASTM E 1264	(1990) Standard Classification for Acoustical Ceiling Products

1.2 GENERAL REQUIREMENTS

Acoustical treatment shall consist of sound controlling units mechanically mounted on a ceiling suspension system. The unit size, texture, finish, and color shall be as specified. The location and extent of acoustical treatment shall be as shown on the drawings.

1.3 SUBMITTALS

Government approval is required for submittals with a "GA" designation; submittals having an "FIO" designation are for information only. The following shall be submitted in accordance with Section 01300 SUBMITTAL PROCEDURES:

SD-01 Data

Acoustical Ceiling System; FIO.

Manufacturer's descriptive data, catalog cuts, and installation instructions.

SD-04 Drawings

Acoustical Ceiling System; FIO.

Drawings showing suspension system, method of anchoring and fastening, details, and reflected ceiling plan.

SD-13 Certificates

Acoustical Units; FIO.

Certificate attesting that the mineral based acoustical units furnished for the project contains recycled material and showing an estimated percent of such material.

SD-14 Samples

Acoustical Units; FIO.

Two samples of each type of acoustical unit and each type of suspension grid tee section showing texture, finish, and color.

1.4 DELIVERY AND STORAGE

Materials shall be delivered to the site in the manufacturer's original unopened containers with brand name and type clearly marked. Materials shall be carefully handled and stored in dry, watertight enclosures. Immediately before installation, acoustical units shall be stored for not less than 24 hours at the same temperature and relative humidity as the space where they will be installed in order to assure proper temperature and moisture acclimation.

1.5 ENVIRONMENTAL REQUIREMENTS

A uniform temperature of not less than 16 degrees C nor more than 29 degrees C and a relative humidity of not more than 70 percent shall be maintained before, during, and after installation of acoustical units.

1.6 SCHEDULING

Interior finish work such as plastering, concrete and terrazzo work shall be complete and dry before installation. Mechanical, electrical, and other work above the ceiling line shall be completed and heating, ventilating, and air conditioning systems shall be installed and operating in order to maintain temperature and humidity requirements.

1.7 WARRANTY

Manufacturer's standard performance guarantees or warranties that extend beyond a one year period shall be provided.

PART 2 PRODUCTS

2.1 ACOUSTICAL UNITS

Acoustical units shall conform to ASTM E 1264, Class A, and the following requirements:

2.1.1 Units for Exposed-Grid System, Type I

Type: III (mineral fiber with painted finish). Type III acoustical units shall have a minimum recycled material content of 18 percent.
Minimum NRC: 0.55 when tested on mounting No. E-400
Pattern: C and E.
Nominal size: 600 by 600 mm.

Edge detail: Square cut.
Finish: Factory-applied standard finish (Humaguard Plus).
Minimum LR coefficient: 0.80.
Minimum CAC: 35.

2.1.2 Units for Exposed-Grid System, Type II

Type: III (mineral fiber with painted finish). Type III acoustical units shall have a minimum recycled material content of 18 percent.
Minimum NRC: 0.70 when tested on mounting No. E-400
Pattern: G.
Nominal size: 600 by 600 mm.
Edge detail: Beveled tegular.
Finish: Factory-applied standard finish (Humaguard Plus).
Minimum LR coefficient: 0.89.
Minimum CAC: 35.

2.2 SUSPENSION SYSTEM

Suspension system shall be standard exposed-grid, and shall conform to ASTM C 635 for intermediate-duty systems. Surfaces exposed to view shall be aluminum or steel with a factory-applied white baked-enamel finish. Wall molding shall have a flange of not less than 23 mm. Mitered corners shall be provided.

2.3 HANGERS

Hangers shall be galvanized steel wire. Hangers and attachment shall support a minimum 1330 N ultimate vertical load without failure of supporting material or attachment.

2.4 FINISHES

Acoustical units and suspension system members shall have manufacturer's standard textures, patterns and finishes as specified. Ceiling suspension system components shall be treated to inhibit corrosion.

2.5 COLORS AND PATTERNS

Colors and patterns for acoustical units and suspension system components shall be as indicated on the Drawings.

PART 3 EXECUTION

3.1 INSTALLATION

Acoustical work shall be provided complete with necessary fastenings, clips, and other accessories required for a complete installation. Mechanical fastenings shall not be exposed in the finished work. Hangers shall be laid out for each individual room or space. Hangers shall be placed to support framing around beams, ducts, columns, grilles, and other penetrations through ceilings. Main runners and carrying channels shall be kept clear of abutting walls and partitions. At least two main runners shall be provided for each ceiling span. Wherever required to bypass an object with the hanger wires, a subsuspension system shall be installed, so that all hanger wires will be plumb.

3.1.1 Suspension System

Suspension system shall be installed in accordance with ASTM C 636 and as specified herein. There shall be no hanger wires or other loads suspended from underside of steel decking.

3.1.1.1 Plumb Hangers

Hangers shall be plumb and shall not press against insulation covering ducts and pipes.

3.1.1.2 Splayed Hangers

Where hangers must be splayed (sloped or slanted) around obstructions, the resulting horizontal force shall be offset by bracing, countersplaying, or other acceptable means.

3.1.2 Wall Molding

Wall molding shall be provided where ceilings abut vertical surfaces. Wall molding shall be secured not more than 75 mm from ends of each length and not more than 400 mm on centers between end fastenings. Wall molding springs shall be provided at each acoustical unit in semi-exposed or concealed systems.

3.1.3 Acoustical Units

Acoustical units shall be installed in accordance with the approved installation instructions of the manufacturer. Edges of acoustical units shall be in close contact with metal supports, with each other, and in true alignment. Acoustical units shall be arranged so that units less than one-half width are minimized. Units in exposed-grid system shall be held in place with manufacturer's standard hold-down clips, if units weigh less than 5 kg per square m or if required for fire resistance rating.

3.2 CLEANING

Following installation, dirty or discolored surfaces of acoustical units shall be cleaned and left free from defects. Units that are damaged or improperly installed shall be removed and new units provided as directed.

End of Section

SECTION 09650

RESILIENT FLOORING
07/96

PART 1 GENERAL

1.1 REFERENCES

The publications listed below form a part of this specification to the extent referenced. The publications are referred to in the text by basic designation only.

AMERICAN SOCIETY FOR TESTING AND MATERIALS (ASTM)

ASTM D 4078	(1992; R 1996) Water Emulsion Floor Polish
ASTM E 648	(1996a) Critical Radiant Flux of floor-Covering Systems Using a Radiant Heat Energy Source
ASTM E 662	(1994a) Specific Optical Density of Smoke Generated by Solid Materials
ASTM F 1066	(1995a) Vinyl Composition Floor Tile

1.2 FIRE RESISTANCE REQUIREMENTS

Flooring in corridors and exits shall have a minimum average critical radiant flux of 0.45 watts per square centimeter when tested in accordance with ASTM E 648. The smoke density rating shall be less than 450 when tested in accordance with ASTM E 662.

1.3 SUBMITTALS

Government approval is required for submittals with a "GA" designation; submittals having an "FIO" designation are for information only. The following shall be submitted in accordance with Section 01300 SUBMITTAL PROCEDURES:

SD-01 Data

Resilient Flooring and Accessories; FIO.

Manufacturer's descriptive data and installation instructions including cleaning and maintenance instructions.

SD-09 Reports

Resilient Flooring and Accessories; FIO.

Copies of test reports showing that representative product samples of the flooring proposed for use have been tested by an independent testing laboratory within the past three years or when formulation change occurred and conforms to the requirements specified.

SD-14 Samples

Resilient Flooring and Accessories; FIO.

Three samples of each indicated color and type of flooring and base. Sample size shall be minimum 60 by 100 mm.

1.4 DELIVERY AND STORAGE

Materials shall be delivered to the building site in original unopened containers bearing the manufacturer's name, project identification, and handling instructions. Materials shall be stored in a clean dry area with temperature maintained above 21 degrees C for 2 days prior to installation, and shall be stacked according to manufacturer's recommendations. Materials shall be protected from the direct flow of heat from hot-air registers, radiators and other heating fixtures and appliances.

1.5 ENVIRONMENTAL REQUIREMENTS

Areas to receive resilient flooring shall be maintained at a temperature above 21 degrees C and below 38 degrees C for 2 days before application, during application and 2 days after application. A minimum temperature of 13 degrees C shall be maintained thereafter.

1.6 SCHEDULING

Resilient flooring application shall be scheduled after the completion of other work which would damage the finished surface of the flooring.

1.7 WARRANTY

Manufacturer's standard performance guarantees or warranties that extend beyond a one year period shall be provided.

PART 2 PRODUCTS

2.1 VINYL-COMPOSITION TILE

Vinyl-composition tile shall conform to ASTM F 1066, Class 2,(through pattern tile), Composition 1, asbestos-free, and shall be 300 mm square and 3.2 mm thick. Tile shall have the color and pattern uniformly distributed throughout the thickness of the tile. Flooring in any one continuous area shall be from the same lot and shall have the same shade and pattern.

2.2 SHEET VINYL FLOORING

Sheet vinyl flooring shall be composed of a homogeneous floor covering shall be of primarily natural materials consisting of linseed oil, wood flour and rosin binders, mixed and calendered onto natural jute backing. Flooring shall be not less than 2 meters wide. Sheet vinyl flooring with backing shall conform to FS LF-475A and minimum overall thickness of 2.5 mm. Provide sheet vinyl flooring with a graphic pattern and colors as indicated on the Drawings.

2.3 RESILIENT BASE

Base shall be manufacturers standard rubber, coved style (installed with resilient flooring). Base shall be 100 mm high and a minimum 3 mm thick and continuous coil length. Preformed outside corners shall be furnished.

2.4 TRANSITION STRIP

A rubber transition strip tapered to meet abutting material shall be provided.

2.5 ADHESIVE

Adhesive for flooring and wall base shall be as recommended by the flooring manufacturer.

2.6 POLISH

Polish shall conform to ASTM D 4078.

2.7 CAULKING AND SEALANTS

Caulking and sealants shall be in accordance with Section 07900JOINT SEALING.

2.8 MANUFACTURER'S COLOR AND TEXTURE

Color and texture shall be as indicated on the Drawings.

PART 3 EXECUTION

3.1 EXAMINATION/VERIFICATION OF CONDITIONS

The Contractor shall examine and verify that site conditions are in agreement with the design package and shall report all conditions that will prevent a proper installation. The Contractor shall not take any corrective action without written permission from the Government.

3.2 SURFACE PREPARATION

Flooring shall be in a smooth, true, level plane, except where indicated as sloped. Before any work under this section is begun, all defects such as rough or scaling concrete, low spots, high spots, and uneven surfaces shall have been corrected, and all damaged portions of concrete slabs shall have been repaired as recommended by the flooring manufacturer. Concrete curing compounds, other than the type that does not adversely affect adhesion, shall be entirely removed from the slabs. Paint, varnish, oils, release agents, sealers, waxers, and adhesives shall be removed, as recommended by the flooring manufacturer.

3.3 MOISTURE TEST

The suitability of the concrete subfloor for receiving the resilient flooring with regard to moisture content shall be determined by a moisture test as recommended by the flooring manufacturer.

3.4 INSTALLATION OF VINYL-COMPOSITION TILE

Tile flooring shall be installed with adhesive in accordance with the manufacturer's installation instructions. Tile lines and joints shall be kept square, symmetrical, tight, and even. Edge width shall vary as necessary to maintain full-size tiles in the field, but no edge tile shall be less than one-half the field tile size, except where irregular shaped rooms make it impossible. Flooring shall be cut to, and fitted around, all permanent fixtures, built-in furniture and cabinets, pipes, and outlets. Edge tile shall be cut, fitted, and scribed to walls and partitions after field flooring has been applied.

3.5 INSTALLATION OF SHEET VINYL FLOORING

Sheet vinyl flooring shall be installed with adhesive in accordance with the manufacturer's written installation instructions. Flooring shall be fitted to the room by hand cutting, straight scribing, or pattern scribing as necessary to suit job conditions. Flooring shall be cut to, and fitted around, all permanent fixtures, built-in furniture and cabinets, pipes, and outlets. Seams shall be cut by overlapping or underscribing as recommended by the manufacturer. Seams and edges of sheet vinyl flooring in room areas shown on the drawings shall be bonded or welded as recommended by the manufacturer. Flooring shall be installed with an integral coved base.

3.6 INSTALLATION OF RESILIENT BASE

Wall base shall be installed with adhesive in accordance with the manufacturer's written instructions. Base joints shall be tight and base shall be even with adjacent resilient flooring. Voids along the top edge of base at masonry walls shall be filled with caulk.

3.7 CLEANING

Immediately upon completion of installation of tile in a room or an area, flooring and adjacent surfaces shall be cleaned to remove all surplus adhesive. After installation, flooring shall be washed with a cleaning solution, rinsed thoroughly with clear cold water. After each polish coat, floors shall be buffed to an even luster with an electric polishing machine.

3.8 PROTECTION

From the time of laying until acceptance, flooring shall be protected from damage as recommended by the flooring manufacturer. Flooring which becomes damaged, loose, broken, or curled shall be removed and replaced.

End of Section

SECTION 09680

CARPET
09/96

PART 1 GENERAL

1.1 REFERENCES

The publications listed below form a part of this specification to the extent referenced. The publications are referred to in the text by basic designation only.

AMERICAN ASSOCIATION OF TEXTILE CHEMISTS AND COLORISTS (AATCC)

AATCC TM-16	(1993) Test Method: Colorfastness to Light
AATCC TM-134	(1991) Test Method: Electrostatic Propensity of Carpets
AATCC TM-165	(1993) Test Method: Colorfastness to Crocking: Carpets - AATCC Crockmeter Method
AATCC TM-174	(1993) Test Method: Antimicrobial Activity Assessment of Carpet

AMERICAN SOCIETY FOR TESTING AND MATERIALS (ASTM)

ASTM D 418	(1993) Pile Yarn Floor Covering Construction
ASTM D 3278	(1989) Test Methods for Flash Point of Liquids by Setaflash Closed-Cup Apparatus
ASTM E 648	(1996a) Critical Radiant Flux of Floor-Covering Systems Using a Radiant Heat Energy Source

CARPET AND RUG INSTITUTE (CRI)

CRI 104	(1994) Commercial Carpet Installation Standard

CODE OF FEDERAL REGULATIONS (CFR)

16 CFR 1630	Standard for the Surface Flammability of Carpet and Rugs

1.2 SUBMITTALS

Government approval is required for submittals with a "GA" designation; submittals having an "FIO" designation are for information only. The following shall be submitted in accordance with Section 01300 SUBMITTAL PROCEDURES:

SD-01 Data

Carpet and Accessories; FIO.

Manufacturer's catalog data and printed documentation stating physical characteristics, durability, resistance to fading, and flame resistance characteristics for each type of carpet material and installation accessory.

SD-04 Drawings

Installation; FIO.

Three copies of drawings indicating areas receiving carpet, carpet types, textures and patterns, direction of pile, location of seams, and locations of edge molding.

SD-06 Instructions

Carpet and Accessories; FIO.

Three copies of the manufacturer's printed installation instructions for the carpet, including preparation of substrate, seaming techniques, and recommended adhesives and tapes.

SD-09 Reports

Moisture and Alkalinity Tests; FIO.

Three copies of test reports of moisture and alkalinity content of concrete slab stating date of test, person conducting the test, and the area tested.

SD-13 Certificates

Carpet and Accessories; FIO.

Certificates of compliance from a laboratory accredited by the National Laboratory Accreditation Program of the National Institute of Standards and Technology attesting that each type of carpet and carpet with cushion material conforms to the standards specified.

SD-14 Samples

Carpet and Accessories; FIO.

a. Carpet: Two "Production Quality" samples 675 x 450 mm of each carpet proposed for use, showing quality, pattern, and color specified.

SD-19 Operation and Maintenance Manuals

Carpet and Accessories; FIO.

Three copies of carpet manufacturer's maintenance instructions describing recommended type of cleaning equipment and material, spotting and cleaning methods, and cleaning cycles.

1.3 REGULATORY REQUIREMENTS

Carpet and adhesives shall bear the Carpet and Rug Institute (CRI) Indoor Air Quality (IAQ) label. Carpet type bearing the label will indicate that the carpet has been tested and meets the criteria of the CRI IAQ Carpet Testing Program, and minimizes the impact on indoor air quality.

1.4 DELIVERY AND STORAGE

Materials shall be delivered to the site in the manufacturer's original wrappings and packages clearly labeled with the manufacturer's name, brand name, size, dye lot number, and related information. Materials shall be stored in a clean, dry, well ventilated area, protected from damage and soiling, and shall be maintained at a temperature above 16 degrees C for 2 days prior to installation.

1.5 ENVIRONMENTAL REQUIREMENTS

Areas in which carpeting is to be installed shall be maintained at a temperature above 16 degrees C for 2 days before installation, during installation, and for 2 days after installation. A minimum temperature of 13 degrees C shall be maintained thereafter for the duration of the contract. Traffic or movement of furniture or equipment in carpeted area shall not be permitted for 24 hours after installation. Other work which would damage the carpet shall be completed prior to installation of carpet.

1.6 WARRANTY

Manufacturer's standard performance guarantees or warranties that extend beyond a one-year period shall be provided.

PART 2 PRODUCTS

2.1 CARPET

Carpet shall be first quality; free of visual blemishes, streaks, poorly dyed areas, fuzzing of pile yarn, spots or stains, and other physical and manufacturing defects. Carpet materials and treatments shall be reasonably nonallergenic and free of other recognized health hazards. All grade carpets shall have a static control construction which gives adequate durability and performance.

2.1.1 Physical Characteristics

Carpet shall comply with the following:

a. Carpet Construction: Tufted.

b. Type: Broadloom 3.6 m minimum usable carpet width.

c. Pile Type: Graphic loop.

d. Pile Fiber: Commercial branded nylon continuous filament.

f. Gauge or Pitch: Minimum 1/10 in accordance with ASTM D 418.

g. Stitches or Rows/Wires: Minimum 11.0 stitches per 25 mm.

h. Finished Pile Yarn Weight: Minimum 949.2 kg per square meter (28 ounces per square yard). This does not include weight of backings. Weight shall be determined in accordance with ASTM D 418.

i. Pile Density: Minimum 191,996.

j. Dye Method:

Yarn (or Skein) dyed.

k. Backing Materials: Primary backing materials shall be polypropylene. Secondary backing to suit project requirements shall be those customarily used and accepted by the trade for each type of carpet, except when a special unitary back designed for gluedown is provided.

2.1.2 Performance Requirements

a. Static Control: Static control shall be provided to permanently control static buildup to less than 3.5 kV when tested at 20 percent relative humidity and 21 degrees C in accordance with AATCC TM-134.

b. Flammability and Critical Radiant Flux Requirements: Carpet shall comply with 16 CFR 1630. Carpet in corridors and exits shall have a minimum average critical radiant flux of 0.45 watts per square centimeter when tested in accordance with ASTM E 648.

c. Tuft Bind: Tuft bind force required to pull a tuft or loop free from carpet backing shall be a minimum 40 N average force for loop pile.

d. Additional Performance Characteristics:

(1) Antimicrobial: Nontoxic antimicrobial treatment in accordance with AATCC TM-174, Part I (qualitative), guaranteed by the carpet manufacturer to last the life of the carpet.

e. Colorfastness to Crocking: Dry and wet crocking shall comply with AATCC TM-165 and shall have a minimum rating of step 4 on the AATCC Color Transference Chart for all colors.

f. Colorfastness to Light: Colorfastness to light shall comply with AATCC TM-16 and shall have a minimum 4 grey scale rating after 40 hours.

g. Delamination Strength: Delamination strength for tufted carpet with a secondary back shall be minimum of 440 N/m

2.2 ADHESIVES AND CONCRETE PRIMER

Adhesives and concrete primers for installation of carpet shall be waterproof, nonflammable, meet local air-quality standards, and shall be as recommended by the carpet manufacturer. Seam adhesive shall be waterproof, nonflammable, and nonstaining as recommended by the carpet manufacturer. Release adhesive for modular tile carpet shall be as recommended by the

carpet manufacturer. Adhesives flashpoint shall be minimum 60 degrees C in accordance with ASTM D 3278.

2.3 TAPE

Tape for seams shall be as recommended by the carpet manufacturer for the type of seam used in installation.

2.4 COLOR, TEXTURE, AND PATTERN

Color, texture, and pattern shall be as indicated on the Drawings.

PART 3 EXECUTION

3.1 SURFACE PREPARATION

Carpet shall not be installed on surfaces that are unsuitable and will prevent a proper installation. Holes, cracks, depressions, or rough areas shall be repaired using material recommended by the carpet or adhesive manufacturer. Floor shall be free of any foreign materials and swept broom clean. Before beginning work, subfloor shall be tested with glue and carpet to determine "open time" and bond.

3.2 MOISTURE AND ALKALINITY TEST

Concrete slab shall be tested for moisture content and excessive alkalinity in accordance with CRI 104. The moisture content shall not exceed a hygrometer reading of 65 percent.

3.3 PREPARATION OF CONCRETE SUBFLOOR

Installation of the carpeting shall not commence until concrete substrate is at least 90 days old. The concrete surfaces shall be prepared in accordance with instructions of the carpet manufacturer. Type of concrete sealer, when required, shall be compatible with the carpet.

3.4 INSTALLATION

Installation shall be in accordance with the manufacturer's instructions and CRI 104. Edges of carpet meeting hard surface flooring shall be protected with molding. Installation shall be in accordance with the molding manufacturer's instructions.

3.4.1 Broadloom Installation

Broadloom carpet shall be installed direct glue down and shall be smooth, uniform, and secure, with a minimum of seams. Seams shall be uniform, unnoticeable, and treated with a seam adhesive. Side seams shall be run toward the light where practical and where such layout does not increase the number of seams. Breadths shall be installed parallel, with carpet pile in the same direction. Patterns shall be accurately matched. Cutouts, as at door jambs, columns and ducts shall be neatly cut and fitted securely. Seams at doorways shall be located parallel to and centered directly under doors. Seams shall not be made perpendicular to doors or at pivot points. Seams at changes in directions of corridors shall follow the wall line parallel to the carpet direction. Corridors with widths less than 1.8 m shall have the carpet laid lengthwise down the corridors.

3.5 CLEANING AND PROTECTION

3.5.1 Cleaning

After installation of the carpet, debris, scraps, and other foreign matter shall be removed. Soiled spots and adhesive shall be removed from the face of the carpet with appropriate spot remover. Protruding face yarn shall be cut off and removed. Carpet shall be vacuumed clean.

3.5.2 Protection

The installed carpet shall be protected from soiling and damage with heavy, reinforced, nonstaining kraft paper, plywood, or hardboard sheets. Edges of kraft paper protection shall be lapped and secured to provide a continuous cover. Traffic shall be restricted for at least 45 hours. Protective covering shall be removed when directed by the Contracting Officer.

3.6 REMNANTS

Remnants remaining from the installation, consisting of scrap pieces more than 600 mm in dimension with more than 0.6 square meters total, shall be provided. Non-retained scraps shall be removed from site.

End of Section

SECTION 09836

MULTI-COLOR COATING
07/94

PART 1 GENERAL

1.1 REFERENCES

The publications listed below form a part of this specification to the extent referenced. The publications are referred to in the text by the basic designation only.

AMERICAN SOCIETY FOR TESTING AND MATERIALS (ASTM)

ASTM E 84	Surface Burning Characteristics of Building Materials

1.2 SUBMITTALS

Government approval is required for submittals with a "GA" designation; submittals having an "FIO" designation are for information only. The following shall be submitted in accordance with Section 01300 SUBMITTAL PROCEDURES.

SD-06 Instructions

Application Instructions; FIO.

Insulation manufacturer's recommendations for the application and installation of insulation.

Manufacturer's Material Safety Data Sheets (MSDS); GA.

Submit Manufacturer's material safety data sheets for coatings, solvents, and other potentially hazardous materials, as defined in FED-STD-313.

SD-08, Statements

Applicator's qualifications; FIO. Evidence of acceptable variation; FIO.
Applicator's Qualifications; FIO.

Letter of certification from the manufacturer stating that the applicator is an approved applicator for the multi-color coating material furnished. Letter of certification stating the technicians to be utilized for the application of the multi-color coating material have been trained by the coating manufacturer. Certification shall include statement that specialized equipment as required by the coating manufacturer will be used in the application of the multi-color coating.

Evidence of Acceptable Variation; FIO

If a product proposed for use does not conform to requirements of the referenced specification, submit for approval to the Contracting Officer, evidence that the proposed product is either equal to or better than the product specified. The submittal shall include the following:

a. Identification of the proposed substitute;

b. Reason why the substitution is necessary;

c. A comparative analysis of the specified product and the proposed substitute, including tabulations of the composition of pigment and vehicle;

d. The differences between the specified product and the proposed substitute; and

e. Other information necessary for an accurate comparison of the proposed substitute and the specified product.

SD-13, Certificates

Coating; FIO.

For each type of coating, or other product furnished:

a. Submit a certificate from the manufacturer stating that the product conforms to requirements of the referenced specification.

b. If the referenced specification has a Qualified Products List (QPL), certify that the product has been tested and approved for inclusion in the QPL.

SD-14, Samples

Multi-color coating; FIO.

Submit for each color and pattern of each item. Material samples, six inches square, showing the number of coats of coating material on each substrate to which the material is to be applied. Apply coating to the samples in a setback procedure, leaving exposed a portion of the substrate and subsequent portions of each coat.

1.3 QUALITY ASSURANCE

Use only qualified trained applicators for mixing and application of coating. Coverage and hide shall be complete. When color, stain, dirt, or undercoats show through final coat of multi-color coating, the surface shall be covered by additional coats until the coating film is of uniform finish, color appearance, and coverage.

1.4 REGULATORY REQUIREMENTS

1.4.1 Lead Content

Do not use coatings having a lead content over 0.06 percent by weight of nonvolatile content.

1.4.2 Chromate Content

Do not use coatings containing zinc-chromate or strontium-chromate.

1.4.3 Asbestos Content

Materials shall not contain asbestos.

1.4.4 Mercury Content

Materials shall not contain mercury or mercury compounds.

1.5 DELIVERY AND STORAGE

Deliver materials in sealed, labeled containers bearing the manufacturer's name, brand designation, specification number, batch number, color, and date of manufacture. Restrict storage and mixing of materials to locations designated by the Contracting Officer.

1.6 SAFETY METHODS

Apply coating materials using safety methods and equipment in accordance with the following:

1.6.1 Safety Methods Used During Coating Application

Comply with the requirements of SSPC PA 3.

1.6.2 Toxic Materials

To protect personnel from overexposure to toxic materials, conform to the most stringent guidance of:

a. The chemical manufacturer when using mineral spirits, or other chemicals. Use impermeable gloves, chemical goggles or faceshield, and other recommended protective clothing and equipment to avoid exposure of skin, eyes, and respiratory system. Conduct work in a manner to minimize exposure of building occupants and the general public.

b. 29 CFR 1910.1000.

c. Threshold Limit Values (R) of the American Conference of Governmental Industrial Hygienists.

d. Manufacturer's Material Safety Data Sheets (MSDS).

1.7 ENVIRONMENTAL CONDITIONS

1.7.1 Interior Coatings

Apply coatings when surfaces to be painted are dry and the following surface temperatures can be maintained:

a. Between 50 and 95 degrees F during the application of other coatings.

1.8 COLOR SELECTION

Colors of multi-color coatings shall be as indicated or specified. Manufacturers' names and color identification are used for the purpose of color identification only. Named products are acceptable for use only if

they conform to specified requirements. Products of other manufacturers are acceptable if the colors approximate colors indicated and the product conforms to specified requirements.

PART 2 PRODUCTS

2.1 MULTI-COLORED COATING

Low odor, Class A Fire rated and listed per ASTM E 84, plastic terpolymer coating, incorporating a high resistance to fungas, mildew, alkalinity, soil and abrasion. All materials shall be used only as specified by manufacturer's direction label on the container or other technical publications. All multi-color coating materials and primers shall be pure and of the highest grade quality. They shall bear identifying labels on the containers. Thinners, if necessary, shall only be those as recommended by the manufacturer for the material being thinned. All coating materials and equipment shall be comptible in use; finish coats shall be comptaible with foundation coatings, overcoatings and the surfaces to be coated; all tools and equipment shall be comptaible with the coating to be applied. Provide ready mixed multi-color coating materials. Job tinting and mixing is not acceptable. Multi-color coatings shall be Zolatone as manuafactured by Zolatone or Polomyx as manufactured by Polomyx or equal.

PART 3 EXECUTION

3.1 INSPECTION AND ACCEPTANCE OF SURFACES

Follow manufacturer's instructions carefully so as to apply materials only to surfaces which are acceptable. Before starting any work, surfaces to receive multi-color coatings shall be examined carefully for defects which cannot be corrected by the procedures specified under Article, PREPARATION OF SURFACES and which might prevent satisfactory results. Work shall not proceed until defects are corrected. Application of coating materials shall constitute acceptance of the surface, and shall obligate Contractor for such repair as are necessary to repair any unsatisfactory finish resulting.

3.2 PREPARATION OF SURFACES

Prior to surface preparation and application operations, completely mask, remove, or otherwise adequately protect hardware, accessories, machined surfaces, plates, lighting fixtures, and similar items in contact with coated surfaces but not scheduled to receive multi-color coating. Before applying multi-color coating, thoroughly clean all surfaces involved. Schedule cleaning so that dust and other contaminants from the cleaning process do not fall on wet, newly coated surfaces. All surfaces shall be clean, dry and adequately protected from dampness. Surfaces shall be smooth, even, and true to place, and free of any foreign material which will adversely affect adhesion or appearance of applied coating. Mildew shall be removed and neutralized. Before coating is applied, surfaces shall be tested with moisture-testing device. No coating shall be applied when moisture content exceeds 12 percent except as may be required by the manufacturer of the coating materials used. Test sufficient area in each space, and as often as necessary to determine the proper moisture content for application. Prime surfaces to receive multi-color coating with primer recommended by coating manufacturer. Use stark white primer. No top coating will be allowed if primer is any other color than stark white.

Sand and reprime all abrasions and damaged spots in the surface of the prime coat before proceeding with subsequent finish coat.

3.3 APPLICATION

Follow manufacturer's printed recommendations and instructions in application of multi-color coating materials. Apply multi-color coating material by using high velocity, pressure differential spray technique, with variable control to assure uniform distribution and 100 percent full coat (continuous) coverage. Equipment shall be kept clean and in proper condition to provide best quality work. Evenly spread and smoothly apply materials free of runs, sags, holidays, lap marks, air bubbles, and pin holes to assure a smooth finish. Suction or hot spots shall be touched up. Finish material shall be applied in one coat over properly primed surfaces according to manufacturer's instructions and as required to meet specified requirements for sheen, texture and color. Should any coat of coating be adjudged unsatisfactory, it shall be sandpapered or removed and additional coats applied as necessary until satisfactory finish is achieved. Top coating shall consist of applying a background and pattern step.

3.4 PROTECTION AND CLEAN UP

Protect the adjacent work and materials by suitable covering or other method, during application of the textured coating. Upon completion of the work, remove all coating material spots from the floors, glass and other surfaces. Remove from the premises all rubbish and accumulated materials and leave the work in clean, orderly and acceptable condition. Contractor shall repair and recoat damaged surfaces. Repair and recoat damaged surfaces at no additional expense to the Government.

End of Section

SECTION 09900

PAINTING, GENERAL
07/92

PART 1 GENERAL

1.1 REFERENCES

The publications listed below form a part of this specification to the extent referenced. The publications are referred to in the text by basic designation only.

AMERICAN CONFERENCE OF GOVERNMENTAL INDUSTRIAL HYGIENISTS (ACGIH)

ACGIH-02	(1996) Threshold Limit Values for Chemical Substances and Physical Agents and Biological Exposure Indices

AMERICAN SOCIETY FOR TESTING AND MATERIALS (ASTM)

ASTM D 3273	(1994) Resistance to Growth of Mold on the Surface of Interior Coating in an Environmental Chamber
ASTM D 3274	(1995) Evaluating Degree of Surface Disfigurement of Paint Films by Microbial (Fungal or Algal) Growth or Soil and Dirt Accumulation
ASTM D 4258	(1988; R 1992) Surface Cleaning Concrete for Coating

COMMERCIAL ITEM DESCRIPTIONS (CID)

CID A-A-1500	(Rev A) Sealer, Surface (Latex Block Filler)
CID A-A-1788	(Basic) Varnish, Oil: Interior
CID A-A-2246	(Rev A) Paint, Latex (Gloss, Interior)
CID A-A-2247	(Basic) Paint, Latex (Semigloss, Interior)
CID A-A-2248	(Basic) Paint, Latex, (Flat, Interior)
CID A-A-2962	(Basic) Enamel, Alkyd
CID A-A-2994	(Basic) Primer Coating, Interior, for Walls and Wood

FEDERAL SPECIFICATIONS (FS)

FS TT-C-555	(Rev B; Am 1) Coating, Textured (for Interior and Exterior Masonry Surfaces)

FS TT-E-2784	(Rev A) Enamel (Acrylic-Emulsion, Exterior Gloss and Semigloss) (Metric)

STEEL STRUCTURES PAINTING COUNCIL (SSPC)

SSPC Paint 23	(1982) Latex Primer for Steel surfaces
SSPC Paint 25	(1991) Red Iron Oxide, Zinc Oxide, Raw Linseed Oil and Alkyd Primer (Without Lead and Chromate Pigments)
SSPC SP 1	(1982) Solvent Cleaning
SSPC SP 2	(1995) Hand Tool Cleaning
SSPC SP 3	(1995) Power Tool Cleaning
SSPC SP 7	(1994) Brush-Off Blast Cleaning

1.2 SUBMITTALS

Government approval is required for submittals with a "GA" designation; submittals having an "FIO" designation are for information only. The following shall be submitted in accordance with Section 01300 SUBMITTAL PROCEDURES:

SD-01 Data

Paint; FIO.

The names, quantity represented, and intended use for the proprietary brands of materials proposed to be substituted for the specified materials when the required quantity of a particular batch is 200 L or less. regardless of quantities in states where VOC content limitations apply.

SD-06 Instructions

Mixing and Thinning; FIO. Application; FIO.

Manufacturer's current printed product description, material safety data sheets (MSDS) and technical data sheets for each coating system. Detailed mixing, thinning and application instructions, minimum and maximum application temperature, and curing and drying times between coats for epoxy. Detailed application instructions for textured coatings shall be provided.

SD-09 Reports

Paint; FIO.

A statement as to the quantity represented and the intended use, plus the following test report for batches in excess of 200 L:

a. A test report showing that the proposed batch to be used meets specified requirements:

b. A test report showing that a previous batch of the same formulation as the batch to be used met specified requirements, plus, on the proposed batch to be used, a report of test results for properties of weight per liter, viscosity, fineness of grind, drying time, color, and gloss.

SD-13 Certificates

Lead; FIO. Mildewcide and Insecticide; FIO. Volatile Organic Compound (VOC) Content; FIO.

Certificate stating that paints for interior use contain no mercurial mildewcide or insecticide. Certificate stating that paints proposed for use contain not more than 0.06 percent lead by weight of the total nonvolatile. Certificate stating that paints proposed for use meet Federal VOC regulations and those of the of the local Air Pollution Control Districts having jurisdiction over the geographical area in which the project is located.

SD-14 Samples

Paint; FIO.

While the material is at the site or source of supply, and at a time agreeable to the Contractor and the Contracting Officer, a 1 liter sample of each color and batch, except for quantities of 200 liters or less, shall be taken by random selection from the sealed containers by the Contractor in the presence of a representative of the Contracting Officer. The contents of the containers to be sampled shall be thoroughly mixed to ensure that the sample is representative. Samples shall be identified by designated name, specification number, manufacturer name and address, batch number, project contract number, intended use, and quantity involved.

1.3 PACKAGING, LABELING, AND STORING

Paints shall be in sealed containers that legibly show the designated name, formula or specification number, batch number, color, quantity, date of manufacture, manufacturer's formulation number, manufacturer's directions including any warnings and special precautions, and name of manufacturer. Pigmented paints shall be furnished in containers not larger than 20 liters.Paints and thinner shall be stored in accordance with the manufacturer's written directions and as a minimum stored off the ground, under cover, with sufficient ventilation to prevent the buildup of flammable vapors and at temperatures between 4 and 35 degrees C. Paints shall be stored on the project site or segregated at the source of supply sufficiently in advance of need to allow 30 days for testing.

1.4 APPROVAL OF MATERIALS

When samples are tested, approval of materials will be based on tests of the samples; otherwise, materials will be approved based on test reports furnished with them. If materials are approved based on test reports furnished, samples will be retained by the Government for testing should the materials appear defective during or after application. In addition to any other remedies under the contract the cost of retesting defective materials will be at the Contractor's expense.

1.5 ENVIRONMENTAL CONDITIONS

Unless otherwise recommended by the paint manufacturer, the ambient temperature shall be between 7 and 35 degrees C when applying coatings other than water-thinned, epoxy, and moisture-curing polyurethane coatings. Water-thinned coatings shall be applied only when ambient temperature is between 10 and 32 degrees C. Epoxy coatings shall be applied only within the minimum and maximum temperatures recommended by the coating manufacturer.

1.6 SAFETY AND HEALTH

Work shall comply with applicable Federal, State, and local laws and regulations, and with the ACCIDENT PREVENTION PLAN, including the Activity Hazard Analysis as specified in the CONTRACT CLAUSES. The Activity Hazard Analysis shall include analyses of the potential impact of painting operations on painting personnel and on others involved in and adjacent to the work zone.

1.6.1 Worker Exposures

Exposure of workers to hazardous chemical substances shall not exceed limits established by ACGIH-02, or as required by a more stringent applicable regulation.

1.6.2 Toxic Compounds

Toxic products having ineffective physiological warning properties, such as no or low odor or irritation levels, shall not be used unless approved by the Contracting Officer.

1.6.3 Training

Workers having access to an affected work area shall be informed of the contents of the applicable material data safety sheets (MDSS) and shall be informed of potential health and safety hazard and protective controls associated with materials used on the project. An affected work area is one which may receive mists and odors from the painting operations. Workers involved in preparation, painting and clean-up shall be trained in the safe handling and application, and the exposure limit, for each material which the worker will use in the project. Personnel having a need to use respirators and masks shall be instructed in the use and maintenance of such equipment.

1.6.4 Coordination

Work shall be coordinated to minimize exposure of building occupants, other Contractor personnel, and visitors to mists and odors from preparation, painting and clean-up operations.

PART 2 PRODUCTS

2.1 PAINT

The term "paint" as used herein includes emulsions, enamels, paints, stains, varnishes, sealers, cement-emulsion filler, and other coatings, whether used as prime, intermediate, or finish coat. Paint shall conform to the

requirements listed in the painting schedules at the end of this section, except when the required amount of a material of a particular batch is 200 liters or less, an approved first-line proprietary paint material with similar intended formulation, usage and color to that specified may be used. Additional requirements are as follows:

2.1.1 Colors and Tints

Colors shall be as selected from manufacturer's standard colors, as indicated. Manufacturer's standard color is for identification of color only. Tinting of epoxy and urethane paints shall be done by the manufacturer. Stains shall conform in shade to manufacturer's standard color. The color of the undercoats shall vary slightly from the color of the next coat.

2.1.2 Mildewcide and Insecticide

Paint specified for all coats applied to fabrics and vapor barrier jackets over insulation shall contain a mildewcide that will not adversely affect the color, texture, or durability of the coating. The mildewcide shall be incorporated into the paint by the manufacturer and shall attain a surface disfigurement rating of 8 or greater when tested in accordance with ASTM D 3273 and evaluated in accordance with ASTM D 3274. Mercurial mildewcide shall not be used in interior paint. Insecticides shall not be used in paint.

2.1.3 Lead

Paints containing lead in excess of 0.06 percent by weight of the total nonvolatile content (calculated as lead metal) shall not be used.

2.1.4 Chromium

Paints containing zinc chromate or strontium chromate pigments shall not be used.

2.1.5 Volatile Organic Compound (VOC) Content

Paints shall comply with applicable federal, state and local laws enacted to insure compliance with Federal Clean Air Standards and shall conform to the restrictions of the local air pollution control authority.

PART 3 EXECUTION

3.1 PROTECTION OF AREAS NOT TO BE PAINTED

Items not to be painted which are in contact with or adjacent to painted surfaces shall be removed or protected prior to surface preparation and painting operations. Items removed prior to painting shall be replaced when painting is completed. Following completion of painting, workmen skilled in the trades involved shall reinstall removed items. Surfaces contaminated by coating materials shall be restored to original condition.

3.2 SURFACE PREPARATION

Surfaces to be painted shall be clean and free of foreign matter before application of paint or surface treatments. Oil and grease shall be removed

prior to mechanical cleaning. Cleaning shall be programmed so that dust and other contaminants will not fall on wet, newly painted surfaces. Exposed ferrous metals such as nail heads on or in contact with surfaces to be painted with water-thinned paints, shall be spot-primmed with a suitable corrosion-inhibitive primer capable of preventing flash rusting and compatible with the coating specified for the adjacent areas.

3.2.1 Concrete, and Masonry Surfaces

Concrete, stucco and masonry surfaces shall be allowed to dry at least 30 days before painting, except concrete slab on grade which shall be allowed to cure 90 days before painting. Surfaces shall be cleaned in accordance with ASTM D 4258. Glaze, efflorescence, laitance, dirt, grease, oil, asphalt, surface deposits of free iron and other foreign matter shall be removed prior to painting. Surfaces to receive epoxy coatings shall be acid-etched or mechanically abraded as specified by the coating manufacturer, rinsed with water, allowed to dry, and treated with the manufacturer's recommended conditioner prior to application of the first coat.

3.2.2 Ferrous Surfaces

Ferrous surfaces including those that have been shop-coated, shall be solvent-cleaned or detergent-washed in accordance with SSPC SP 1. Surfaces that contain loose rust, loose mill scale, and other foreign substances shall be cleaned mechanically with hand tools according to SSPC SP 2, power tools according to SSPC SP 3 or by sandblasting according to SSPC SP 7. Shop-coated ferrous surfaces shall be protected from corrosion by treating and touching up corroded areas immediately upon detection.

3.2.3 Nonferrous Metallic Surfaces

Galvanized, aluminum and aluminum-alloy, lead, copper, and other nonferrous metal surfaces shall be solvent-cleaned or detergent-washed in accordance with SSPC SP 1.

3.2.4 Gypsum Board Surfaces

Gypsum board surfaces shall be dry and shall have all loose dirt and dust removed by brushing with a soft brush, rubbing with a cloth, or vacuum-cleaning prior to application of the first-coat material. A damp cloth or sponge may be used if paint will be water-based.

3.2.5 Mastic-Type Surfaces

Mastic-type surfaces shall be prepared by removing foreign material.

3.2.6 Wood Surfaces

Wood surfaces shall be cleaned of foreign matter. Moisture content of the wood shall not exceed 12 percent as measured by a moisture meter, unless otherwise authorized. Wood surfaces adjacent to surfaces to receive water-thinned paints shall be primed and/or touched up before applying water-thinned paints. Small, dry seasoned knots shall be scraped, cleaned, and given a thin coat of commercial knot sealer, before application of the priming coat. Pitch on large, open, unseasoned knots and all other beads or streaks of pitch shall be scraped off, or, if it is still soft, removed with

mineral spirits or turpentine, and the resinous area shall be thinly coated with knot sealer. Finishing nails shall be set, and all holes and surface imperfections shall be primed. After priming, holes and imperfections in finish surfaces shall be filled with putty or plastic wood filler, colored to match the finish coat if natural finish is required, allowed to dry, and sanded smooth. Putty or wood filler shall be compatible with subsequent coatings.

3.2.6.1 Interior Wood Stain

Interior wood surfaces to receive stain shall be sanded. Oak and other open-grain wood to receive stain shall be given a coat of wood filler not less than 8 hours before the application of stain; excess filler shall be removed and the surface sanded smooth.

3.3 MIXING AND THINNING

When thinning is approved as necessary to suit surface, temperature, weather conditions, or application methods, paints may be thinned in accordance with the manufacturer's directions. When thinning is allowed, paints shall be thinned immediately prior to application with not more than 0.125 L of suitable thinner per liter. The use of thinner shall not relieve the Contractor from obtaining complete hiding, full film thickness, or required gloss. Thinning shall not cause the paint to exceed limits on volatile organic compounds. Paints of different manufacturers shall not be mixed.

3.4 APPLICATION

Painting practices shall comply with applicable federal, state and local laws enacted to insure compliance with Federal Clean Air Standards. Unless otherwise specified or recommended by the paint manufacturer, paint may be applied by brush, roller, or spray. At the time of application, paint shall show no signs of deterioration. Uniform suspension of pigments shall be maintained during application. Each coat of paint shall be applied so dry film shall be of uniform thickness and free from runs, drops, ridges, waves, pinholes or other voids, laps, brush marks, and variations in color, texture, and finish. Hiding shall be complete. Rollers for applying paints and enamels shall be of a type designed for the coating to be applied and the surface to be coated. Special attention shall be given to insure that all edges, corners, crevices, welds, and rivets receive a film thickness equal to that of adjacent painted surfaces. Paints, except water-thinned types, shall be applied only to surfaces that are completely free of moisture as determined by sight or touch.

3.4.1 Ventilation

Affected areas shall be ventilated during paint application so that workers exposure to chemical substances shall not exceed limits as established by ACGIH-02, or as required by a more stringent applicable regulation. Interior work zones having a volume of 280 cubic meters or less shall be ventilated at a minimum of 2 air exchanges per hour. Ventilation in larger work zones shall be maintained by means of mechanical exhaust. Solvent vapors shall be exhausted outdoors, away from air intakes and workers. Return air inlets in the work zone shall be temporarily sealed before start of work until the coatings have dried.

3.4.2 Respirators

Operators and personnel in the vicinity of operating paint sprayers shall wear respirators.

3.4.3 First Coat

The first coat on gypsum wallboard, and other surfaces shall include repeated touching up of suction spots or overall application of primer or sealer to produce uniform color and gloss. Excess sealer shall be wiped off after each application. The first coat on both faces of wood doors shall be applied at essentially the same time. Each varnish coat shall be sanded lightly prior to application of subsequent coats.

3.4.4 Timing

Surfaces that have been cleaned, pretreated, and otherwise prepared for painting shall be given a coat of the specified first coat as soon as practical after such pretreatment has been completed, but prior to any deterioration of the prepared surface. Sufficient time shall elapse between successive coats to permit proper drying. This period shall be modified as necessary to suit weather conditions. Oil-based or oleoresinous solvent-type paints shall be considered dry for recoating when the paint feels firm, does not deform or feel sticky under moderate pressure of the thumb, and the application of another coat of paint does not cause the undercoat to lift or lose adhesion. Manufacturer's instructions for application, curing and drying time between coats of two-component systems shall be followed.

3.4.5 Stains

Stain shall be applied at the rate specified in the manufacturer's printed directions. Oil-type stain shall be applied by brushing with the grain for the full length of the board or course of siding.

3.4.6 Fillers

Concrete and masonry surface voids shall be filled; however, surface irregularities need not be completely filled. The dried filler shall be uniform and free of pinholes. Filler shall not be applied over caulking compound.

3.4.6.1 Latex Filler

Latex filler, CID A-A-1500, shall be applied according to the manufacturer's instructions. Surface voids shall be filled and excess filler shall be removed from the surface with a rubber squeegee. The filler shall be allowed to dry the length of time specified by the manufacturer prior to applying successive coats of paint.

3.4.7 Textured Coating

Application of textured coating, FS TT-C-555, shall be as specified in the manufacturer's printed directions.

3.4.8 Ferrous-Metal Primer

Primer for ferrous-metal shall be applied to ferrous surfaces to receive paint other than asphalt varnish prior to deterioration of the prepared surface. The semitransparent film applied to some pipes and tubing at the mill is not to be considered a shop coat, but shall be overcoated with the specified ferrous-metal primer prior to application of finish coats.

3.5 PIPE COLOR CODE MARKING

Pipes in exposed areas and in accessible pipe spaces shall be provided with color band and titles adjacent to all valves, except those provided at plumbing fixtures, at not more than 12 meter spacing on straight pipe runs, adjacent to change in direction, and on both sides where pipes pass through walls or floors. Color code marking shall be of the color listed in TABLE I and the size listed in TABLE II. The arrows shall be installed adjacent to each band to indicate the direction of flow in the pipe. The legends shall be printed in upper-case black letters as listed in TABLE I. Letter sizes shall be as listed in TABLE II. Marking shall be painted or applied using colored, pressure-sensitive adhesive markers of standard manufacture. Paint shall be as specified for insulated and uninsulated piping.

TABLE I. COLOR CODES FOR MARKING PIPE

Material	Band	Letters and Arrow*	Legend
Cold water (potable)	Green	White	POTABLE WATER
Fire protection water	Red	White	FIRE PR. WATER
Hot water (domestic)	Green	White	H.W.
Hot water recirculating (domestic)	Green	White	H.W.R.
High temp. water supply	Yellow	Black	H.T.W.S.
High temp. water return	Yellow	Black	H.T.W.R.
Boiler feed water	Yellow	Black	B.F.
Low temp. water supply (heating)	Yellow	Black	L.T.W.S.
Low temp. water return (heating)	Yellow	Black	L.T.W.R.
Condenser water supply	Green	White	COND. W.S.
Condenser water return	Green	White	COND. W.R.
Chilled water supply	Green	White	C.H.W.S.
Chilled water return	Green	White	C.H.W.R.
Treated water	Yellow	Black	TR. WATER
Chemical feed	Yellow	Black	CH. FEED
Compressed air	Yellow	Black	COMP. AIR
Natural gas	Blue	White	NAT. GAS
Freon	Blue	White	FREON
Fuel oil	Yellow	Black	FUEL OIL
Steam	Yellow	Black	STM.
Condensate	Yellow	Black	COND.

TABLE II. COLOR CODE MARKING SIZES

Outside Diameter of Pipe Covering (mm)	Width of Color Band (mm)	Arrow Length x Width (mm)	Size of Legend Letters and Numerals (mm)

Less than 38	200	200 x 57	13
38 to 60	200	200 x 57	19
60 to 150	300	200 x 57	31
200 to 225	600	300 x 110	63
Over 250	800	300 x 115	88

3.6 MISCELLANEOUS PAINTING

3.6.1 Lettering

Lettering shall be provided as scheduled on the drawings, shall be block type, and shall be black enamel. Samples shall be approved before application.

3.7 SURFACES TO BE PAINTED

Surfaces listed in the painting schedules at the end of this section, other than those listed in paragraph SURFACES NOT TO BE PAINTED, shall be painted as scheduled.

3.8 SURFACES NOT TO BE PAINTED

Surfaces of hardware, fittings, and other factory finished items shall not be painted.

3.9 CLEANING

Cloths, cotton waste and other debris that might constitute a fire hazard shall be placed in closed metal containers and removed at the end of each day. Upon completion of the work, staging, scaffolding, and containers shall be removed from the site or destroyed in an approved manner. Paint and other deposits on adjacent surfaces shall be removed and the entire job left clean and acceptable.

3.10 PAINTING SCHEDULES

The following painting schedules identify the surfaces to be painted and prescribe the paint to be used and the number of coats of paint to be applied. Contractor options are indicated by ------or------ between optional systems or coats.

EXTERIOR PAINTING SCHEDULE

Surface	First Coat	Second Coat	Third Coat
Galvanized metal.	FS TT-E-2784 Type III	FS TT-E-2784	FS TT-E-2784

INTERIOR PAINTING SCHEDULE

Surface	First Coat	Second Coat	Third Coat
Concrete masonry units requiring a smooth finish	CID A-A-1500	CID A-A-2994 Type II	CID A-A-2246 -----or----- CID A-A-2247 -----or----- CID A-A-2248
Concrete masonry units: in, shower areas.	CID A-A-1500	CID A-A-2994 Type II	FS TT-E-2784 Type _____
Plaster and gypsum board: in shower areas.	CID A-A-2994 Type II	FS TT-E-2784 Type _____	None
Ferrous Metal Structural exposed to view, and other as specified	SSPC Paint 25	CID A-A-2962 Type I Grade C	CID A-A-2962 Type I Grade C
Ferrous metal factory-primed mechanical and electrical equipment.	Two coats of paint as recommended by the equipment manufacturer		None
Galvanized metal:	FS TT-E-2784 Type III	FS TT-E-2784	None
Wood: unless otherwise - specified.	CID A-A-2994 Type I	CID A-A-2246 ----------or----------	None

		CID A-A-2247	None
		----------or----------	
-		CID A-A-2248	None
Wood: stain and varnish finishes as follows: Doors and Cabinets	Commercially available stain	CID A-A-1788 Class I In addition a fourth coat of CID A-A-1788	CID A-A-1788 Class I
Ferrous Metal: Convector enclosures, electrical conduit runs: metallic tubing uninsulated ducts and pipes, pipe hangers, louvers, grilles, and air outlets, in areas having painted adjacent surfaces.	SSPC Paint 23	None	None
Aluminum and Galvanized Surface Metal: Convector enclosures, electrical conduit runs metallic tubing uninsulated ducts and pipes, pipe hangers, louvers, grilles, and air outlets, in areas having painted adjacent surfaces.	FS TT-E-2784	CID A-A-2246 ----------or---------- CID A-A-2247 ----------or---------- CID A-A-2248	CID A-A-2246 CID A-A-2247 CID A-A-2248
Facing of vapor barrier jackets of presized or adhesive finished cloth cover insulation on pipes, ducts, and equipment.	Two coats of paint to match adjacent areas		None

End of Section

SECTION 09950

WALLCOVERINGS
12/96

PART 1 GENERAL

1.1 REFERENCES

The publications listed below form a part of this specification to the extent referenced. The publications are referred to in the text by basic designation only.

AMERICAN SOCIETY FOR TESTING AND MATERIALS (ASTM)

ASTM E 84	(1996a) Surface Burning Characteristics of Building Materials
ASTM F 793	(1993) Standard Classification of Wallcovering by Durability Characteristics

1.2 SUBMITTALS

Government approval is required for submittals with a "GA" designation; submittals having an "FIO" designation are for information only. The following shall be submitted in accordance with Section 01300 SUBMITTAL PROCEDURES:

SD-01 Data

Wallcovering and Accessories; FIO.

Manufacturer's descriptive data, documentation stating physical characteristics, flame resistance, mildew and germicidal characteristics.

SD-06 Instructions

Installation; FIO.

Preprinted installation instructions for wallcovering and accessories.

Maintenance; FIO.

Preprinted cleaning and maintenance instructions for wallcovering and accessories.

SD-13 Certificates

Wallcovering; FIO.

Manufacturer's statement attesting that the product furnished meets or exceeds specification requirements. The statement must; be dated after the award of the contract, state Contractor's name and address, name the project and location, and list the requirements being certified.

SD-14 Samples

Wallcovering and Accessories; FIO.

Three samples of each indicated type, pattern, and color of wallcovering. Samples of wall covering shall be minimum 125 x 175 mm and of sufficient size to show pattern repeat. Three samples of each indicated type corner guard and wainscot cap.

1.3 DELIVERY AND STORAGE

Materials shall be delivered to the site in manufacturers original unopened containers labeled with manufacturers name, pattern, texture, size and related information. Materials shall be stored in accordance with the manufacturer's instructions in a clean dry ventilated area with temperature maintained above 16 degrees C for two days prior to installation.

1.4 ENVIRONMENTAL REQUIREMENTS

Areas to receive wallcovering shall be maintained at a temperature above 16 degrees C for 7 days before, during, and 7 days after application.

1.5 WARRANTY

Manufacturer's standard performance guarantees or warranties that extend beyond a one-year period shall be provided.

PART 2 PRODUCTS

2.1 WALLCOVERINGS

Wallcoverings shall be material designed specifically for the specified use. The wallcovering shall contain a non-mercury based mildewcide. The wallcovering shall be type made without the use of cadmium based stabilizers. Wallcovering shall have a Class A flame spread rating of 0-25 and smoke development rating of 0-50 when tested in accordance with ASTM E 84.

2.1.1 Vinyl Wallcovering

Vinyl wallcovering shall be a vinyl coated woven or nonwoven fabric with germicidal additives and shall conform to ASTM F 793, Category V Type II, (0.445 to 0.815 kg) total weight per square meter and width of 1350 mm (54 inches).

2.2 PRIMER AND ADHESIVE

Primer and adhesive shall be of a type recommended by the wallcovering manufacturer and shall contain a non-mercury based mildewcide. Adhesive shall be strippable type. Adhesive to install cap shall be of a type recommended by the manufacturer of the wainscot cap.

2.3 COLOR, TEXTURE, AND PATTERN

Color, texture, and pattern shall be as indicated on the Drawings.

PART 3 EXECUTION

3.1 EXAMINATION

Contractor shall inspect all areas and conditions under which wallcoverings are to be installed. Contractor shall notify in writing of any conditions detrimental to the proper and timely completion of the installation. Work will proceed only when conditions have been corrected and accepted by the installer.

3.2 SURFACE PREPARATION

Wallcovering shall not be applied to surfaces that are rough, that contain stains that will bleed through the wallcovering, or that are otherwise unsuitable for proper installation. Cracks and holes shall be filled and rough spots shall be sanded smooth. Surfaces to receive wallcovering shall be thoroughly dry. Interior surfaces of exterior masonry walls shall be sealed to prevent moisture penetration, then primed with a wallcovering primer in accordance with the manufacturer's instructions. Surface of walls shall be primed as required by manufacturer's instructions to permit ultimate removal of wallcovering from the wall surface. Primer shall be allowed to completely dry before adhesive application.

3.3 INSTALLATION

3.3.1 Vinyl Wallcovering

Wallcovering shall be installed in accordance with the manufacturer's installation instructions. Glue and adhesive spillage shall be immediately removed from wallcovering face and seams with a remover recommended by the manufacturer. After the installation is complete, the fabric wallcovering shall be vacuumed with a ceiling to floor motion.

3.4 CLEAN-UP

Upon completion of the work, wallcovering shall be left clean and free of dirt or soiling. Surplus materials, rubbish, and debris resulting from the wallcovering installation shall be removed and area shall be left clean.

End of Section

SECTION 10100

MISCELLANEOUS ITEMS

PART 1 GENERAL

1.1 GENERAL REQUIREMENTS

Supplementary parts necessary to complete each item shall be included even though such work is not shown definitely or specified. The Contractor shall furnish to the proper trades, all anchors, sockets, or fastenings required for securing items to other construction. Details and specifications of items for which standard products are available, are representative guides of requirements for such items. Standard products, generally meeting such requirements, will be accepted, if details of construction and installation are approved by the Contracting Officer. Gages of sheet iron and steel specified are U.S. Standard for sheet and plate. Extruded section shall be at least 1/8-inch thick, unless otherwise specified or shown on the drawings.

1.2 SUBMITTALS

Government approval is required for submittals with a "GA" designation; submittals having an "FIO" designation are for information only. The following shall be submitted in accordance with Section 01300 SUBMITTAL PROCEDURES:

SD-01 Data

Presentation Units; FIO. Fire Extinguisher Cabinets and Wall Brackets; FIO. Fire Extinguishers; FIO. Foot Scraper/Brush; FIO. Projection Screen; FIO. Mail Drop; FIO.

Manufacturer's technical data and catalog cuts including installation and cleaning instructions.

SD-04, Drawings

Presentation Units; FIO. Fire Extinguisher Cabinets and Wall Brackets; FIO. Foot Scraper/Brush; FIO. Projection Screen; FIO.

Shop drawings showing sizes, details of construction, method of construction, method of assembling, hardware materials (where applicable), colors, method of mounting, location of each item, and other details shall be submitted for approval for all items specified herein. Materials fabricated or delivered to the job site before approval of the shop drawings shall be subject to rejection.

SD-14, Samples

Presentaton Units; FIO. Projection Screen; FIO. 2 Prong Hook; FIO.

One complete sample of each presentation surface to be used on the project. One sample of projection screen material.

PART 2 MATERIALS

2.1 PRESENTATION UNITS

2.1.1 Acceptable Manufacturer's

a. Egan Visual Inc,. Woodbridge, Ontario Canada.

b. Claridge Products, Harrison, Arkansas.

c. Hart Visual, Madison, Wisconsin.

d. The use of a trade name and supplier's name and address in the specification is to indicate possible source of the product. The same type of product from other sources shall not be excluded provided they possess like physical characteristics, color and texture. If the product is from a foreign supplier it shall be subject to the Buy American Act.

2.1.2 Description

a. White marker board in wood cabinets.

b. Interior door panels with fabric covered tackboard in color as indicated on the Drawings.

c. Cabinet doors and trim in mahogany wood veneer.

d. Equal to Model #612-4MS 4'-0" x 4'-0" x 4-1/2" as manufactured by Claridge Products or equal.

2.2 FIRE EXTINGUISHER CABINETS

2.2.1 Fire Extinguisher Cabinets

Metal fire extinguisher cabinets shall be furnished and installed where shown on the drawings or specified. Cabinets shall be of the recessed type suitable for 2-1/2 gallon extinguishers. Box and trim shall be of heavy gage rolled steel. Door shall be a rigid frame with full length piano type hinge and double strength (DSA) glass panel. Door and box shall be prime-coated inside and out, with a enamel finish coat.

2.2.2 Fire Extinguisher Wall Brackets

Provide manufacturer's standard wall brackets in locations other than where cabinets are located as indicated on the Drawings.

2.3 FOOT SCRAPER/BRUSH

2.3.1 Construction

Cast aluminum housing with manufacturer's standard brush on bottom and sides. Housing shall be black anodized. Provide for mounting to floor. Foot scraper/brush shall be model number 549 as manufactured by Par Aide Products Company (612-779-9851) or equal.

2.4 PROJECTION SCREEN

BoardRoom type custom designed projection screen as manufactured by Da-Lite Screen Company, Inc. or Envoy type custom designed projection screen as manufactured by Draper Shade & Screen Co., Inc. or equal.

2.4.1 Operation

Electrically operated 115 volt (60 Hz) 1.13 amp. A specially designed motor with noise silencer, mounted inside roller, to be three wire quick reversal type, self lubricating, with automatic thermal overload cutout, integral gears, capacitor and an electric brake to prevent coasting. Motor to have pre-set, adjustable limit switches to automatically stop screen in the "up" and "down" positions. Roller to be of rigid metal, 75 mm in diameter, mounted on two vibration and noise absorbing supports.

2.4.2 Screen Fabric

Seamless, flame retardant and mildew resistant with glass-beaded picture surface and black masking borders. Bottom of fabric to be formed into pocket holding a 9 mm metal rod, with ends protected by heavy duty plastic caps.

2.4.3 Case

Flush mounted, constructed of wood with metal-lined wiring compartment. A section of the bottom of the case to be an aluminum door equipped with hinges so that it opens and closes automatically with the lowering and raising of the screen. Balance of the bottom of the case shall be a second hinged aluminum door with manual opening to provide access.

2.4.4 Screen Size

2700 mm high x 3600 mm wide.

2.4.5 Quantity and Location

As shown on the Drawings.

2.5 HOOK

Provide a 2 prong hook, chrome plated steel. Provide with 2 chrome plated screws for attachment.

2.6 MAIL DROP

Provide a mail drop with a liner. Liner shall be fabricated of not less than 0.078 inch extruded aluminum with mitered and staked corners. Finish shall be brushed aluminum with overall dimensions of 12 17/32 inches wide x 5 5/16 inches high x 1 5/8 inch deep.

PART 3 EXECUTION

3.1 INSTALLATION

3.1.1 Presentation Units

Install presentation units in accordance with manufacturer's recommendations.

3.1.2 Fire Extinguisher Cabinets

Install fire extinguisher cabinets in accordance with manufacturer's recommendations.

3.1.3 Foot Scraper/Brush

Install foot scraper/brush in accordance with manufacturer's recommendations.

3.1.4 Projection Screen

Install screen in accordance with manufacturer's recommendations to provide a complete, finished installation.

3.1.5 Hook

Install hooks in locations as indicated on the Drawings.

3.1.6 Mail Drop

Install mail drop in locations as indicated on the Drawings.

End of Section

SECTION 10160

TOILET PARTITIONS
08/94

PART 1 GENERAL

1.1 REFERENCES

The publications listed below form a part of this specification to the extent referenced. The publications are referred to in the text by basic designation only.

CODE OF FEDERAL REGULATIONS (CFR)

36 CFR 1191	Americans with Disabilities Act (ADA) Accessibility Guidelines for Buildings and Facilities

FEDERAL SPECIFICATIONS (FS)

FS RR-P-1352	(Rev C) Partitions, Toilet, Complete

FEDERAL STANDARDS (FED-STD)

FED-STD 795	(Basic) Uniform Federal Accessibility Standards

1.2 SYSTEM DESCRIPTION

Toilet partition system, including toilet enclosures, and urinal screens, shall be a complete and usable system of panels, hardware, and support components. The partition system shall be provided by a single manufacturer and shall be a standard product as shown in the most recent catalog data. The partition system shall comply with FED-STD 795 and 36 CFR 1191 for areas as shown.

1.3 SUBMITTALS

Government approval is required for submittals with a "GA" designation; submittals having an "FIO" designation are for information only. The following shall be submitted in accordance with Section 01300 SUBMITTAL PROCEDURES:

SD-01 Data

Toilet Partition System; FIO.

Manufacturer's technical data and catalog cuts including installation and cleaning instructions.

SD-04 Drawings

Toilet Partition System; FIO.

Drawings showing plans, elevations, details of construction, hardware, reinforcing, fittings, mountings, and anchorings.

SD-14 Samples

Toilet Partition System; FIO.

Manufacturer's standard color charts and color samples.

1.4 DELIVERY, STORAGE, AND HANDLING

Components shall be delivered to the jobsite in the manufacturer's original packaging with the brand, item identification, and project reference clearly marked. Components shall be stored in a dry location that is adequately ventilated and free from dust, water, or other contaminants and shall have easy access for inspection and handling.

1.5 WARRANTY

Manufacturer's standard performance guarantees or warranties that extend beyond a 1 year period shall be provided.

PART 2 PRODUCTS

2.1 TOILET ENCLOSURES

Toilet enclosures shall conform to FS RR-P-1352, Type I, Style C. Width, length and height of toilet enclosures shall be as shown. Finish surface of panels shall be laminated plastic finish 4. Panels indicated to receive toilet paper holders or grab bars as specified in Section 10800 TOILET ACCESSORIES shall be reinforced for the reception of the items required. Grab bars shall comply with FED-STD 795 and 36 CFR 1191.

2.2 URINAL SCREENS

Urinal screens shall conform to FS RR-P-1352, Type III, Style A. Finish surface of screens shall be laminated plastic finish 4. Width and height of urinal screens shall be as shown.

2.3 HARDWARE

Hardware for the toilet partition system shall conform to FS RR-P-1352for the specified type and style of partitions. Hardware finish shall be highly resistant to alkalies, urine, and other common toilet room acids.

2.4 COLORS

Color of finishes for toilet partition system components shall be as indicated on the Drawings.

PART 3 EXECUTION

3.1 INSTALLATION

Toilet partitions shall be installed straight and plumb in accordance with approved manufacturer's instructions with horizontal lines level and rigidly anchored to the supporting construction. Where indicated, anchorage to

walls shall be by through-bolting or toggle-bolting. Drilling and cutting for installation of anchors shall be at locations that will be concealed in the finished work.

3.2 ADJUSTING AND CLEANING

Doors shall have a uniform vertical edge clearance of approximately 5 mm and shall rest open at approximately 30 degrees when unlatched. Baked enamel finish shall be touched up with the same color of paint that was used for the finish. Toilet partitions shall be cleaned in accordance with approved manufacturer's instructions and shall be protected from damage until accepted.

End of Section

SECTION 10201

METAL WALL LOUVERS
09/96

PART 1 GENERAL

1.1 REFERENCES

The publications listed below form a part of this specification to the extent referenced. The publications are referred to in the text by the basic designation only.

AIR MOVEMENT AND CONTROL ASSOCIATION, INC. (AMCA)

AMCA 500	(1991) Louvers, Dampers and Shutters
AMCA 511	(1986) Certified Ratings Program for Air Control Devices

AMERICAN SOCIETY FOR TESTING AND MATERIALS (ASTM)

ASTM A 653/A 653M	(1995) Steel Sheet, Zinc-Coated (Galvanized) or Zinc-Iron Alloy-Coated (Galvannealed) by the Hot-Dip Process

1.2 SUBMITTALS

Government approval is required for submittals with a "GA" designation; submittals having an "FIO" designation are for information only. The following shall be submitted in accordance with Section 01300 SUBMITTAL PROCEDURES:

SD-01 Data

Wall Louvers; GA.

Manufacturer's standard color charts, Colors of finishes shall closely approximate colors indicated. Where color is not indicated, submit the manufacturer's standard colors to the Contracting Officer for selection.

SD-04 Drawings

Wall Louvers; GA.

Show all information necessary for fabrication and installation of louvers. Indicate materials, sizes, thicknesses, fastenings, and profiles.

1.3 DELIVERY, STORAGE, AND PROTECTION

Deliver materials to the site in an undamaged condition. Carefully store materials off the ground to provide proper ventilation, drainage, and

protection against dampness. Louvers shall be free from nicks, scratches, and blemishes. Replace defective or damaged materials with new.

1.4 PROJECT CONDITIONS

1.4.1 Field Measurements

Check actual louver openings by accurate field measurements before fabrication; show recorded measurements on final shop drawings. Coordinate fabrication schedule with construction progress to avoid delay of the Work. Where field measurements cannot be made without delaying the Work, guarantee opening dimensions and proceed with fabrication of louvers and vents without field measurements. Coordinate wall construction to ensure that actual opening dimensions correspond to guaranteed dimensions.

PART 2 PRODUCTS

2.1 MATERIALS

2.1.1 Galvanized Steel Sheet

ASTM A 653/A 653M, coating designation Z275.

2.1.2 Bituminous Paint

SSPC-Paint 12 (cold-applied asphalt mastic).

2.1.3 Galvanizing Repair Paint

High zinc dust content paint for regalvanizing welds in galvanized steel, complying with SSPC-Paint-20.

2.2 METAL WALL LOUVERS

Weather resistant type, with bird screens. Wall louvers shall bear the AMCA certified ratings program seal for air performance and water penetration in accordance with AMCA 500 and AMCA 511.

2.2.1 Formed Metal Louvers

a. Frame: Extuded aluminum, Alloy 6063-T5.
   1) Wall thickness: 2.1 mm nominal.
   2) Depth: 152 mm.
   3) Downspouts and caulking surfaces.
b. Blades:
   1) Style: Drainable.
   2) Material: Extruded aluminum, Alloy 6063-T5.
   3) Wall Thickness: 2.1 mm, nominal.
   4) Angle: 37.5 degrees.
   5) Centers: 150 mm, nominal.
c. Bird Screen:
   1) Material: Aluminum, 13 mm mesh x 1.6 mm, intercrimp.
   2) Frame: Removable, rewireable.
d. Gutters: Drain gutter in head frame and each blade.
e. Downspouts: Downspouts in jambs to drain water from louver for minimum water cascade from blade to blade.

f. Vertical Supports: Hidden vertical supports to allow continuous line appearance up to 3,048 mm.
g. Sill: Steeply angled integral sill eliminating areas of standing or trapped moisture where mold or mildew may thrive and effect indoor air quality.
h. Assembly: Factory assemble louver components. All welded construction.
i. Performance Data:
1) Based on testing 1,219 mm x 1,219 mm size unit in accordance with AMCA 500.
2) Free Area: 55 percent, nominal.
3) Free Area Size: 0.82 meters squared.
4) Maximum Recommended Air Flow Thru Free Area: 5.1 m/s
5) Air Flow: 4200 L/s
6) Maximum Pressure Drop: 0.04 kPa.
7) Water Penetration: Maximum 3.1 g/m squared of free area at an air flow of 5.1 m/s free area velocity when tested for 15 minutes.
j. Design Load: Incorporate structural supports required to withstand wind load of 0.96 kPa.

2.3 FASTENERS

Provide stainless steel screws and fasteners for aluminum louvers and zinc-coated or stainless steel screws and fasteners for steel louvers. Provide other accessories as required for complete and proper installation.

2.4 ACCESSORIES

2.4.1 Extended Sills

Extruded aluminum, Alloy 6063-T5. Minimum nominal wall thickness 1.5 mm.

2.4.2 Counterbalanced Backdraft Dampers

Frame: 3.2 mm wall thickness of 6063-T5 alloy extruded aluminum, galvanized steel structural brace at each corner. Blades of 1.8 mm wall thickness, 6063-T5 alloy extruded aluminum with extruded vinyl blade edge seals mechanically locked into blade edge. Adhesive or clip-on type seals are unacceptable. Bearings: corrosion resistant, long life synthetic type for quite operation. Linkage: 13 mm wide tiebar connected to stainless steel pivot pins. Dampers shall be designed for maximum 3500 fpm spot velocities and up to 1000 Pa backpressure.

2.5 FINISHES

2.5.1 Aluminum

Provide factory-applied organic coating.

2.5.1.1 Organic Coating

Kynar 500 Fluoropolymer Coating:

a. Conform to AAMA 605.2.
b. Apply coating following cleaning and pretreatment
c. Cleaning: AA-C12C42R1X.
d. Dry louvers before final finish application.

e. Total Dry Film Thickness: Approximately 0.03 mm when baked at 232 degrees C for 10 minutes.

2.6 INSULATED BLANK-OFF PANELS

2.6.1 Insulated Blank-Off Panels

Provide insulated blank-off panels of the same metal as louvers at inactive portions of louvers and complying with the following requirements:

1. Exterior Finish: Match finish applied to louver with respect to coating type and gloss, except for color which shall be black.
2. Interior Finish: Natural mill.
3. Attach blank-off panels to back of louver frames with stainless steel sheet metal screws.

2.7 FABRICATION

a. Fabricate louvers and vents to comply with requirements indicated for design, dimensions, materials, joinery, and performance.

b. Preassemble louvers in shop to minimize field splicing and assembly. Disassemble units as necessary for shipping and handling limitations. Clearly mark units for reassembly and coordinate installation.

c. Maintain equal louver blade spacing, including separation between blades and frames at head and sill, to produce uniform appearance.

d. Fabricate frames, including integral sills, to fit in openings of size indicated with allowances made for fabrication and installation tolerances of louvers, adjoining construction, and perimeter sealant joints.

1. Include supports, anchorages, and accessories required for complete assembly.

e. Provide vertical mullions of type and at spacings indicated but not further apart than recommended by manufacturer, or 3600 mm (144 inches) on center, whichever is less. At horizontal joints between louver units provide horizontal mullions except where continuous vertical assemblies are indicated.

f. Provide sill extensions and loose sills made of same material as louvers, where indicated, or required for drainage to exterior and to prevent water penetrating to interior.

g. Louvers shall be assembled entirely by welding.

1. Stationary louver blades shall be joined to each jamb frame with two 25 mm (one inch) long x 3.13 mm (0.125") throat fillet welds concealed from view from the exterior and produced with the Pulsed Gas Metal Arc Welding Process (GMAW/MIG).
2. Frames shall be joined at each corner with full-length x 3.13 mm (0.125") throat fillet welds concealed from view and produced with the Pulsed Gas Metal Arc Welding Process (GMAW/MIG).

PART 3 EXECUTION

3.1 INSTALLATION

3.1.1 Wall Louvers

Install using stops or moldings, flanges, strap anchors, or jamb fasteners as appropriate for the wall construction and in accordance with manufacturer's recommendations.

3.1.2 Backdraft Dampers

Provide backdraft dampers where relief louver is indicated.

3.1.3 Screens and Frames

Attach frames to louvers with screws or bolts.

3.2 PROTECTION FROM CONTACT OF DISSIMILAR MATERIALS

3.2.1 Copper or Copper-Bearing Alloys

Paint copper or copper-bearing alloys in contact with dissimilar metal with heavy-bodied bituminous paint or separate with inert membrane.

3.2.2 Aluminum

Where aluminum contacts metal other than zinc, paint the dissimilar metal with a primer and two coats of aluminum paint.

3.2.3 Metal

Paint metal in contact with mortar, concrete, or other masonry materials with alkali-resistant coatings such as heavy-bodied bituminous paint.

End of Section

SECTION 10430

EXTERIOR SIGNAGE
05/95

PART 1 GENERAL

1.1 REFERENCES

The publications listed below form a part of this specification to the extent referenced. The publications are referred to in the text by basic designation only.

AMERICAN SOCIETY FOR TESTING AND MATERIALS (ASTM)

ASTM A 36	(1996) Carbon Structural Steel
ASTM A 123	(1989a) Zinc (Hot-Dip Galvanized) Coatings on Iron and Steel Products
ASTM A 570	(1996) Steel, Sheet and Strip, Carbon, Hot-Rolled, Structural Quality
ASTM A 653	(1996) Steel Sheet, Zinc-Coated (Galvanized) or Zinc-Iron Alloy-Coated (Galvannealed) by the Hot-Dip Process
ASTM A 653M	(1995) Steel Sheet, Zinc-Coated (Galvanized) or Zinc-Iron Alloy-Coated (Galvannealed) by the Hot-Dip Process (Metric)
ASTM A 924	(1996) Steel Sheet, Metallic-Coated by the Hot-Dip Process
ASTM A 924M	(1995) Steel Sheet, Metallic-Coated by the Hot-Dip Process (Metric)
ASTM B 209	(1996) Aluminum and Aluminum-Alloy Sheet and Plate
ASTM B 221	(1996) Aluminum and Aluminum-Alloy Extruded Bars, Rods, Wire, Shapes, and Tubes
ASTM E 84	(1996a) Surface Burning Characteristics of Building Materials

AMERICAN WELDING SOCIETY (AWS)

AWS D1.1	(1994) Structural Welding Code - Steel

NATIONAL ASSOCIATION OF ARCHITECTURAL METAL MANUFACTURERS (NAAMM)

NAAMM AMP 505	(1988) Metal Finishes Manual for Architectural and Metal Products; Section: Applied Coatings

1.2 GENERAL

Exterior signage shall be of the size and type shown on the drawings, shall conform to the requirements specified herein, and shall be provided at the locations indicated. Signs shall be complete with lettering, framing as detailed, and related components for a complete installation. Materials and equipment shall be the standard product of a manufacturer regularly engaged in the manufacture of the products. Items of equipment shall essentially duplicate equipment that has been in satisfactory use at least 2 years prior to bid opening.

1.3 SUBMITTALS

Government approval is required for submittals with a "GA" designation; submittals having an "FIO" designation are for information only. The following shall be submitted in accordance with Section 01300 SUBMITTAL PROCEDURES:

SD-01 Data

Exterior Signs; FIO.

Manufacturer's descriptive data, catalog cuts, and installation instructions.

SD-04 Drawings

Exterior Signs; FIO.

Drawings showing elevations of each type of sign; dimensions, details, and methods of mounting or anchoring; shape and thickness of materials; and details of construction. A schedule showing the location of each sign type shall be included.

SD-06 Instructions

Exterior Signs; FIO.

Manufacturer's installation instructions and cleaning instructions.

SD-14 Samples

Exterior Signs; FIO.

One sample of each type of sign. Each sample shall consist of a complete sign panel with letters and symbols. Samples may be installed in the work, provided each sample is identified and location recorded. Two samples of manufacturer's standard color chips for each material requiring color selection.

1.4 DELIVERY AND STORAGE

Materials shall be wrapped for shipment and storage, delivered to the jobsite in manufacturer's original packaging, and stored in a clean, dry area.

PART 2 PRODUCTS

2.1 COLOR, FINISH, AND CONTRAST

Color of products shall be as indicated on the Drawings. For buildings required to be handicapped-accessible, the characters and background of signs shall be eggshell, matte, or other non-glare finish. Characters and symbols shall contrast with their background - either light characters on a dark background or dark characters on a light background.

2.2 CHARACTER PROPORTIONS AND HEIGHTS

Letters and numbers on signs for handicapped-accessible buildings shall have a width-to-height ratio between 3:5 and 1:1 and a stroke-width-to-height ratio between 1:5 and 1:10. Characters and numbers on signs shall be sized according to the viewing distance from which they are to be read. The minimum height is measured using an upper case letter X. Lower case characters are permitted.

2.3 ALUMINUM ALLOY PRODUCTS

Aluminum alloy products shall conform to ASTM B 209 for sheet or plate, ASTM B 221 for extrusions. Aluminum extrusions shall be provided at least 3 mm thick and aluminum plate or sheet at least 1.3 mm thick.

2.4 ORGANIC COATING

Surfaces shall be cleaned, primed, and given a semi-gloss baked enamel or two-component acrylic polyurethane finish in accordance with NAAMM AMP 505 with total dry film thickness not less than 0.030 mm.

2.5 STEEL PRODUCTS

Structural steel products shall conform to ASTM A 36. Sheet and strip steel products shall conform to ASTM A 570.

2.6 VINYL SHEETING FOR GRAPHICS

Vinyl sheeting shall be in accordance with the flammability requirements of ASTM E 84 and shall be a minimum 0.08 mm film thickness. Film shall include a precoated pressure sensitive adhesive backing, Class 1, or positionable pressure sensitive adhesive backing, Class 3.

2.7 ANCHORS AND FASTENERS

Exposed anchor and fastener materials shall be compatible with metal to which applied and shall match in color and finish.

2.8 SHOP FABRICATION AND MANUFACTURE

2.8.1 Workmanship

Work shall be assembled in the shop, insofar as practicable, ready for installation at the site. Work that cannot be shop assembled shall be given a trial fit in the shop to ensure proper field assembly. Holes for bolts and screws shall be drilled or punched. Drilling and punching shall produce clean, true lines and surfaces. Welding to or on structural steel shall be

in accordance with AWS D1.1. Welding shall be continuous along the entire area of contact. Exposed welds shall be ground smooth. Exposed surfaces of work shall have a smooth finish and exposed riveting shall be flush. Fastenings shall be concealed where practicable. Items specified to be galvanized shall be by hot-dip process after fabrication if practicable. Galvanization shall be in accordance with ASTM A 123 and ASTM A 653 or ASTM A 653M, as applicable. Other metallic coatings of steel sheet shall be in accordance with ASTM A 924 or ASTM A 924M. Joints exposed to the weather shall be formed to exclude water. Drainage and weep holes shall be included as required to prevent condensation buildup.

2.8.2 Dissimilar Materials

Where dissimilar metals are in contact, or where aluminum is in contact with concrete, mortar, masonry, wet or pressure-treated wood, or absorptive materials subject to wetting, the surfaces shall be protected with a coat of asphalt varnish or a coat of zinc-molybdate primer to prevent galvanic or corrosive action.

2.8.3 Shop Painting

Surfaces of miscellaneous metal work, except nonferrous metal, corrosion resisting steel, and zinc-coated work, shall be given one coat of zinc-molybdate primer or an approved rust-resisting treatment and metallic primer in accordance with manufacturer's standard practice. Surfaces of items to be embedded in concrete shall not be painted. Upon completion of work, damaged surfaces shall be recoated.

2.9 PANEL TYPE SIGNS

2.9.1 Panels

Modular message panels shall be provided in sizes shown on drawings. Panels shall be fabricated a minimum of 2.3 mm aluminum. Panels with metal return sheeting shall have welded corners, ground smooth.

2.9.2 Finishes

Post finish shall be semi-gloss baked enamel or two-component acrylic polyurethane. Metal panel framing system finish shall be baked enamel or two-component acrylic polyurethane.

2.10 GRAPHICS FOR PANEL TYPE SIGNS

2.10.1 Graphics

Signage graphics shall conform to the following:

a. Pressure sensitive precision cut vinyl letters with reflecting surface shall be provided.

b. Message shall be applied to panel using the silkscreen process. Silkscreened images shall be executed with photo screens prepared from original art. No handcut screens will be accepted. Original art shall be defined as artwork that is a first generation stencil of the original specified art. Edges and corners shall be clean.

Rounded corners, cut or ragged edges, edge buildup, bleeding or surfaces pinholes will not be accepted.

2.11 PRESSURE SENSITIVE LETTERS

Precision cut vinyl letters shall be provided. Edges and corners of finished letter forms and graphics shall be true and clean.

2.11.1 Typeface

Typeface shall be as indicated on the Drawings.

2.11.2 Size

Letter size shall be as indicated.

PART 3 EXECUTION

3.1 INSTALLATION

Signs shall be installed in accordance with approved manufacturer's instructions at locations shown on the drawings. Signs shall be installed plumb and true at mounting heights indicated, and by method shown or specified. Signs mounted on other surfaces shall not be installed until finishes on such surfaces have been completed.

3.1.1 Anchorage

Anchorage shall be in accordance with approved manufacturer's instructions. Anchorage not otherwise specified or indicated shall include slotted inserts, expansion shields, and power-driven fasteners when approved for concrete; toggle bolts and through bolts for masonry; machine carriage bolts for steel; lag bolts and screws for wood.

3.1.2 Protection and Cleaning

The work shall be protected against damage during construction. Hardware shall be adjusted for proper operation. Glass, frames, and other sign surfaces shall be cleaned in accordance with manufacturer's instructions.

End of Section

SECTION 10440

INTERIOR SIGNAGE
05/95

PART 1 GENERAL

1.1 REFERENCES

The publications listed below form a part of this specification to the extent referenced. The publications are referred to in the text by basic designation only.

ALUMINUM ASSOCIATION (AA)

AA DAF-45	(1980) Designation System for Aluminum Finishes
AA PK-1	(1989) Registration Record of Aluminum Association Alloy Designations and Chemical Composition Limits for Aluminum Alloys in the Form of Castings and Ingot
AA SAA-46	(1978) Standards for Anodized Architectural Aluminum

AMERICAN ARCHITECTURAL MANUFACTURERS ASSOCIATION (AAMA)

AAMA 605.2	(1992; Addenda Jan 1995) Voluntary Specification for High Performance Organic Coatings on Architectural Extrusions and Panels

AMERICAN NATIONAL STANDARDS INSTITUTE (ANSI)

ANSI Z97.1	(1984; Rev 1994) Safety Performance Specifications and Methods of Test for Safety Glazing Materials Used in Buildings

AMERICAN SOCIETY FOR TESTING AND MATERIALS (ASTM)

ASTM B 209	(1996) Aluminum and Aluminum-Alloy Sheet and Plate
ASTM B 221	(1996) Aluminum and Aluminum-Alloy Extruded Bars, Rods, Wire, Shapes, and Tubes
ASTM C 1036	(1991) Flat Glass

1.2 GENERAL

Interior signage shall be of the sizes and types shown on the drawings, shall conform to the requirements specified herein, and shall be provided at the locations indicated. Signs shall be complete with lettering, framing as

detailed, and related components for a complete installation. Signs shall be the standard product of a manufacturer regularly engaged in the manufacture of such products and shall essentially duplicate signs that have been in satisfactory use at least 2 years prior to bid opening.

1.3 SUBMITTALS

Government approval is required for submittals with a "GA" designation; submittals having an "FIO" designation are for information only. The following shall be submitted in accordance with Section 01300 SUBMITTAL PROCEDURES:

SD-01 Data

Interior Signage; FIO.

Manufacturer's descriptive data, catalogs cuts, installation and cleaning instructions.

SD-04 Drawings

Interior Signage; FIO.

Drawings showing elevations of each type of sign, dimensions, details and methods of mounting or anchoring, shape and thickness of materials, and details of construction. A schedule showing the location of each sign type shall be included.

SD-14 Samples

Interior Signage; FIO.

One sample of each of the following sign types showing typical quality and workmanship. The samples may be installed in the work, provided each sample is identified and location recorded.

a. Door sign.

b. Building directory.

Two samples of manufacturer's standard color chips for each material requiring color selection.

1.4 DELIVERY AND STORAGE

Materials shall be delivered to the jobsite in manufacturer's original packaging and stored in a clean, dry area.

PART 2 PRODUCTS

2.1 COLOR, FINISH, AND CONTRAST

Color shall be as indicated on the Drawings. In buildings required to be handicapped-accessible, the characters and background of signs shall be eggshell, matte, or other non-glare finish. Characters and symbols shall contrast with their background - either light characters on a dark background or dark characters on a light background.

2.2 CHARACTER PROPORTIONS AND HEIGHTS

Letters and numbers on signs in handicapped-accessible buildings, which do not designate permanent rooms or spaces, shall have a width-to-height ratio between 3:5 and 1:1 and a stroke-width-to-height ratio between 1:5 and 1:10. Characters and numbers on signs shall be sized according to the viewing distance from which they are to be read. The minimum height is measured using an upper case letter X. Lower case characters are permitted. Suspended or projected overhead signs shall have a minimum character height of 75 mm.

2.3 ALUMINUM ALLOY PRODUCTS

Aluminum extrusions shall be at least 3 mm thick, and aluminum plate or sheet shall be at least 1.3 mm thick. Extrusions shall conform to ASTM B 221; plate and sheet shall conform to ASTM B 209. Where anodic coatings are specified, alloy shall conform to AA PK-1 alloy designation 514.0. Exposed anodized aluminum finishes shall be as shown and shall conform to AA SAA-46.

2.3.1 Anodic Coating

Anodized finish shall conform to AA DAF-45 as follows:

a. Integral color anodized designation AA-M10-C22-A32, Architectural Class 0.010 to 0.018 mm.

b. Electrolytically deposited color-anodized designation AA-M10-C22-A34, Architectural Class II 0.010 to 0.018 mm.

2.3.2 Organic Coating

Organic coating shall conform to AAMA 605.2, with total dry film thickness not less than 0.030 mm.

2.4 VINYL SHEETING FOR GRAPHICS

Vinyl sheeting for graphics shall be a minimum 0.08 mm film thickness. Film shall include a precoated pressure sensitive adhesive backing.

2.5 PLAQUE SIGNS

Plaque signs shall be a modular type signage system. Signs shall be fabricated of Type ES laminated thermosetting plastic suitable for engraving or acrylic plastic conforming to ANSI Z97.1.

2.5.1 Standard Modular Plaque Signs

Plaque signs shall consist of matte finish acrylic plastic, laminated thermosetting Type ES plastic, thickness and size as shown. Frames shall be molded acrylic. Corners of signs shall be 13 mm radius.

2.5.2 Modular Changeable Message Strip Plaque Signs

Changeable message strip plaque signs shall consist of cast acrylic back laminated to matte finish laminated thermosetting Type ES plastic face with message slots, as detailed, for insertion of changeable message strips.

Thickness and size of signs shall be as shown on the drawings. Individual 1.6 mm thick message strips to permit removal, change, and reinsertion shall be provided as detailed. Corners of signs shall be 13 mm radius.

2.5.3 Type of Mounting For Plaque Signs

Extruded aluminum brackets, in finish as shown, shall be furnished for hanging, projecting, and double-sided signs. Mounting for framed, hanging, and projecting signs shall be by holes and screws. Surface mounted signs shall be provided with 1.6 mm thick vinyl foam tape. Sign inserts shall be provided with 1.6 mm thick foam tape.

2.6 GRAPHICS

2.6.1 Raised and Brailled Characters and Pictorial Symbol S

Letters and numbers on signs which designate permanent rooms and spaces in handicapped-accessible buildings (administration offices) shall be raised 0.8 mm upper case, sans serif or simple serif type and shall be accompanied with Grade 2 Braille. Raised characters shall be at least 16 mm height, but no higher than 50 mm.Pictograms shall be accompanied by the equivalent verbal description placed directly below the pictogram. The border dimension of the pictogram shall be 152 mm minimum in height. Accessible facilities shall use the international

2.6.2 Graphics Application

Signage graphics shall conform to the following:

a. Pressure sensitive precision cut vinyl letters shall be provided. Edges and corners of finished letter forms and graphics shall be true and clean.

b. Message shall be applied to panel using the silkscreen process. Silkscreened images shall be executed with photo screens prepared from original art. No handcut screens will be accepted. Original art shall be defined as artwork that is a first generation reproduction of the specified art. Edges and corners shall be clean.

c. Tactile characters and symbols shall be raised 0.8 mm minimum from the sign face. Signs shall be of one piece construction. Add-on characters are not acceptable.

2.6.3 Messages

See drawings for message content, Typeface: as indicated. Type size as indicated.

2.7 CHANGEABLE LETTER BUILDING DIRECTORIES

2.7.1 Changeable Letter Directories

Changeable letter building directories shall be provided with a changeable directory listing consisting of the areas, offices and personnel located within the facility. The changeable directory board shall be 800 mm high and have a width in 600 mm increments, and shall have a 265 mm high

continuous header. Width of sign shall be as shown on the drawings. Colors shall be white letters and numbers on a black felt or vinyl grooved background, unless otherwise indicated on the Drawings. Message content shall be as shown.

2.7.1.1 Header Lettering

Building or military unit name letters shall be upper and lower case Helvetica Medium 50 mm high capital letter, flush left. Service name letters shall be upper and lower case Helvetica Regular 50 mmhigh capital letter, flush left. Building numbers shall be 100 mm high, flush left.

2.7.1.2 Changeable Directory Letters

Assortment of letters shall include three entire sets of the alphabet with emphasis on the most used characters and three sets of numbers.

2.7.1.3 Header Panel

Header panel shall be acrylic with raised acrylic letters.

2.7.1.4 Doors

2.7.1.5 Door Glazing

Door glazing shall be in accordance with ASTM C 1036, Type 1, Class 1, Quality 3, minimum 3 mm thick.

2.7.1.6 Door Construction

Extruded aluminum door frame shall be of same finish as surrounding frame. Corners shall be mitered, reinforced, welded, and assembled with concealed fasteners. Hinges shall be standard with the manufacturer, in finish to match frames and trim. Glazing shall be set in frame with resilient glazing channels.

2.7.1.7 Door Locks

Door locks shall be manufacturer's standard, and shall be keyed alike. Lock finish shall match the door finish.

2.7.1.8 Fabrication

Extruded aluminum frames and trim shall be assembled with corners welded and mitered to a hairline fit, with no exposed fastners. Removable changeable directory panel shall consist of fiberboard back with wool felt covering backgrooved 6 mm on centers to receive flanged letters.

2.8 ANCHORS AND FASTENERS

Exposed anchor and fastener materials shall be compatible with metal to which applied and shall have matching color and finish. Anchorage system shall be of the type recommended by the manufacturer of the indicated substrate. Where recommended by signage manufacturer, foam tape pads may be used for anchorage. Foam tape pads shall be minimum 2 mm thick closed cell vinyl foam with adhesive backing. Adhesive shall be transparent, long aging, high tech formulation on two sides of the vinyl foam. Adhesive

surfaces shall be protected with a 0.13 mm green flatstock treated with silicone. Foam pads shall be sized for the signage as per signage manufacturer's recommendations.

2.9 OFFICE IDENTIFICATION SIGNS

2.9.1 Type BB2

Type BB2 (Wall Mounted) shall onsist of a permanent header panel with the room number and an insert panel which identifies the tenant. The insert panel shall be a clear sleeve which will accept a paper or plastic insert with the name of the tenant. Sign design shall be as follows:

a. Colors:

Header panel - White number on standard blue background.

Insert panel - Blue letters on white background.

b. Dimensions: 9" x 9".

c. Message:

Room number - Helvetica medium, 1-1/2" numbers, flush left.

Tenant name - Upper and lower case helvetica medium, 1/2" capital letter height, flush left.

Secondary information - Upper and lower case helvetica regular, 1/2" capital letter height, flush left.

The insert area shall accommodate four lines with a maximum line length of 21 characters.

2.9.2 Type BB7

Service Identification Sign (Type BB7) identifies restrooms, telephones, and other services. Sign design shall be as follows:

a. Colors:

Symbols - Red symbol on white background.

b. Dimensions: 9" x 6".

c. Message:

Service name - Helvetica medium upper and lower case, 1" capital letter height, centered.

The message line will accommodate a maximum of 7 tiles.

Service name - Helvetica medium upper and lower case, 3/4" capital letter height, centered.

The message line will accommodate a maximum of 9 tiles.

2.9.3 Regulatory Signs

Symbols, such as for "No Smoking", shall be black with a standard red circle and bar on a white background. Written messages are not required.

2.9.3.1 Type DD2

a. Dimensions: 6" x 6".

b. Symbol: 5" x 5" square.

2.10 FABRICATION AND MANUFACTURE

2.10.1 Workmanship

Holes for bolts and screws shall be drilled or punched. Drilling and punching shall produce clean, true lines and surfaces. Exposed surfaces of work shall have a smooth finish and exposed riveting shall be flush. Fastenings shall be concealed where practicable.

2.10.2 Dissimilar Materials

Where dissimilar metals are in contact, the surfaces will be protected to prevent galvanic or corrosive action.

PART 3 EXECUTION

3.1 INSTALLATION

Signs shall be installed in accordance with approved manufacturer's instructions at locations shown on the drawings. Signs shall be installed plumb and true at mounting heights indicated, and by method shown or specified. Signs which designate permanent rooms and spaces in handicapped-accessible buildings shall be installed on the wall adjacent to the latch side of the door. Where there is no wall space to the latch side of the door, including at double leaf doors, signs shall be placed on the nearest adjacent wall. Mounting height shall be 1525 mm above the finish floor to the centerline of the sign. Mounting location for such signage shall be so that a person may approach within 75 mm of signage without encountering protruding objects or standing within the swing of a door. Signs on doors or other surfaces shall not be installed until finishes on such surfaces have been installed.

3.1.1 Anchorage

Anchorage shall be in accordance with approved manufacturer's instructions. Anchorage not otherwise specified or indicated shall include slotted inserts, expansion shields, and power-driven fasteners when approved for concrete; toggle bolts and through bolts for masonry; machine carriage bolts for steel; lag bolts and screws for wood.

3.1.2 Protection and Cleaning

The work shall be protected against damage during construction. Hardware shall be adjusted for proper operation. Glass, frames, and other sign surfaces shall be cleaned in accordance with the manufacturer's approved instructions.

End of Section

SECTION 10800

TOILET ACCESSORIES
10/94

PART 1 GENERAL

1.1 REFERENCES

The publications listed below form a part of this specification to the extent referenced. The publications are referred to in the text by basic designation only.

AMERICAN SOCIETY FOR TESTING AND MATERIALS (ASTM)

ASTM C 1036 (1991) Flat Glass

1.2 SUBMITTALS

Government approval is required for submittals with a "GA" designation, submittals having an "FIO" designation are for information only. The following shall be submitted in accordance with Section 01300 SUBMITTAL PROCEDURES:

SD-01 Data

Finishes; FIO. Accessory Items; FIO.

Manufacturer's descriptive data and catalog cuts indicating materials of construction, fasteners proposed for use for each type of wall construction, mounting instructions, and operation instructions.

SD-14 Samples

Finishes; FIO. Accessory Items; FIO.

One sample of each accessory proposed for use. Approved samples may be incorporated into the finished work, provided they are identified and their locations noted.

1.3 DELIVERY, STORAGE, AND HANDLING

Toilet accessories shall be wrapped for shipment and storage, delivered to the jobsite in manufacturer's original packaging and stored in a clean, dry area protected from construction damage and vandalism.

PART 2 PRODUCTS

2.1 MANUFACTURED UNITS

Toilet accessories shall be provided where indicated in accordance with paragraph SCHEDULE. Each accessory item shall be complete with the necessary mounting plates, shall be of sturdy construction with corrosion resistant surface.

2.1.1 Anchors and Fasteners

Anchors and fasteners shall be capable of developing a restraining force commensurate with the strength of the accessory to be mounted and shall be suited for use with the supporting construction. Exposed fasteners shall be of tamperproof design and shall be finished to match the accessory.

2.1.2 Finishes

Except where noted otherwise, finishes on metal shall be provided as follows:

Metal	Finish
Stainless steel	No. 4 satin finish
Carbon steel, copper alloy, and brass	Chromium plated, bright

2.2 ACCESSORY ITEMS

Accessory items shall conform to the requirements specified below.

2.2.1 Grab Bar (GB)

Grab bar shall be 1.3 mm (18 gauge), 32 mm OD Type 304 stainless steel. Grab bar shall be form and length as indicated. Concealed mounting flange shall have set screw mounting holes concealed on the lip of the flange. Grab bar shall have satin finish with a peened non-slip surface. Installed bars shall be capable of withstanding a 2.225 kN vertical load without coming loose from the fastenings and without obvious permanent deformation. Space between wall and grab bar shall be 38 mm.

2.2.2 Mirror, Tilt (MT)

Tilt mirror shall be surface mounted and shall provide full visibility for person in a wheelchair. Mirror shall have fixed tilt, extending at least 100 mm from the wall at the top and tapering to 25 mm at the bottom. Size shall be in accordance with 600 x 900 mm (24 x 36 inches). Glass for mirrors shall conform to ASTM C 1036 and paragraph Glass Mirrors.

2.2.3 Mirror

Mirror shall be surface mounted. Size shall be in accordance with paragraph SCHEDULE the drawings 900 x 600 mm (36 x 24 inches). Glass for mirrors shall conform to ASTM C 1036 and paragraph Glass Mirrors.

2.2.4 Combination Paper Towel Dispenser/Waste Receptacle Units (PTDWR)

Dispenser/receptacle shall be surface mounted and shall have a capacity of 400 sheets of C-fold, single-fold, or quarter-fold towel. Waste receptacle shall be designed to be locked in unit and removable for service. Locking mechanism shall be tumbler key lock. Waste receptacle shall have a capacity of 45 68 14 L. (3.75 gallons) Unit shall be fabricated of not less than 0.8 mm stainless steel welded construction with all exposed surfaces having a

satin finish. Waste receptacle that accepts reusable liner standard for unit manufacturer shall be provided.

2.2.5 Sanitary Napkin Disposer (SND)

Sanitary napkin disposal shall be constructed of Type 304 stainless steel with removable leak-proof receptacle for disposable liners. Fifty disposable liners of the type standard with the manufacturer shall be provided. Receptacle shall be retained in cabinet by tumbler lock. Disposer shall be provided with a door for inserting disposed napkins, and shall be partition mounted, double access.

2.2.6 Sanitary Napkin and Tampon Dispenser (SNTD)

Sanitary napkin and tampon dispenser shall be surface mounted. Dispenser, including door shall be Type 304 stainless steel and shall dispense both napkins and tampons with a minimum capacity of 20 each. Dispensing mechanism shall be for coin operation. Coin mechanisms shall be field changeable by adjusting pins for new coin designation. Coin mechanisms shall have minimum denominations of 10 cents, 25 cents, and free. Doors shall be hung with a full-length corrosion-resistant steel piano hinge and secured with a tumbler lock. Keys for coin box shall be different from the door keys.

2.2.7 Soap Dispenser (SD)

Soap dispenser shall be recessed, liquid type consisting of a horizontal Type 304 stainless steel tank with holding capacity of 1.6 L (53 oz) with a corrosion-resistant all-purpose valve that dispenses liquid soaps, lotions, detergents and antiseptic soaps.

2.2.8 Towel Bar (TB)

Towel bar shall be stainless steel with a minimum thickness of 0.38 mm. Bar shall be minimum 19 mm diameter, or 16 mm square. Finish shall be bright polish.

2.2.9 Toilet Tissue Dispenser (TTD)

Toilet tissue holder shall be Type II - surface mounted with two rolls of tissue mounted horizontally. Cabinet shall be carbon steel, bright chromium plated finish or stainless steel, satin finish.

2.2.10 Mop and Broom Holder/Utility Shelf

Combination unit with 0.05 inch (1.3 mm), Type 304, stainless steel shelf with 1/2 inch (13 mm) returns, 0.062 inch (1.6 mm) support brackets for wall mounting. Provide 0.062 inch (1.6 mm) stainless steel hooks for wiping rags on front of shelf, together with spring-loaded, rubber hat, cam-type mop/broom holders; 1/4 inch (6 mm) diameter stainless steel drying rod suspended beneath shelf. Provide unit 36 inches (900 mm) long and complete with four mop/broom holders and three hooks.

2.2.11 Shower Seat

Folding teakwood shower seat shall be fabricated of 12.5 mm (1/2 inch) thick handrubbed teakwood slats secured to a stainless steel frame of 25 mm (1

inch) diameter, 18 gauge tubing. Support leg locks into 11 gauge retaining bracket with bullet-type catch. Overall dimensions: 809.27 mm (32-3/8 inches wide x 264.5 mm (21-1/2 inches) deeep x 37.5 mm (1-1/2 inches) thick.

2.2.12 Robe Hook

Surface mounted robe hook shall be type 304 stainless steel with satin finish. Flange shall be 22 gauge (0.8 mm) and equipped with concealed, 16 gauge (1.6 mm) mounting bracket that is secured to concealed, 16 gauge (1.6 mm) wall plate with locking setscrew. Cap shall be 10 gauge (3.6 mm), welded to suport arm.

PART 3 EXECUTION

3.1 INSTALLATION

Toilet accessories shall be securely fastened to the supporting construction in accordance with the manufacturer's approved instructions. Accessories shall be protected from damage from the time of installation until acceptance.

End of Section

SECTION 12520

WINDOW TREATMENT
12/96

PART 1 GENERAL

1.1 REFERENCES

The publications listed below form a part of this specification to the extent referenced. The publications are referred to in the text by basic designation only.

FEDERAL SPECIFICATIONS (FS)

FS AA-V-00200 (Rev B) Venetian Blinds

1.2 GENERAL

Window treatment shall be provided, complete with necessary brackets, fittings, and hardware. Each window treatment type shall be a complete unit provided as indicated on the Drawings. Equipment shall be mounted and operated as indicated. Windows to receive a treatment shall be completely covered. The Contractor shall take measurements at the building and shall be responsible for the proper fitting and hanging of the equipment.

1.3 SUBMITTALS

Government approval is required for submittals with a "GA" designation; submittals having an "FIO" designation are for information only. The following shall be submitted in accordance with Section 01300 SUBMITTAL PROCEDURES:

SD-01 Data

Window Treatments and Hardware; FIO.

Manufacturer's data composed of catalog cuts, brochures, product information, and maintenance instructions.

SD-04 Drawings

Window Treatments and Hardware; FIO.

Drawings showing fabrication and installation details. Drawings shall show layout and locations of track, direction of draw, mounting heights, and details.

SD-14 Samples

Window Treatments and Hardware; FIO.

Three samples of each type and color of window treatment. Blind slats or louvers shall be 150 mm in length for each color. Track shall be 150 mm in length. Shade material shall be minimum 150 by 150 mm in size.

1.4 DELIVERY, STORAGE, AND HANDLING

Components shall be delivered to the jobsite in the manufacturer's original packaging with the brand or company name, item identification, and project reference clearly marked. Components shall be stored in a dry location that is adequately ventilated and free from dust, water, or other contaminants and shall have easy access for inspection and handling. Materials shall be stored flat in a clean dry area with temperature maintained above 10 degrees C.

1.5 FIELD MEASUREMENTS

The Contractor shall become familiar with details of the work, verify dimensions in the field, and shall advise the Contracting Officer of any discrepancy before performing the work.

1.6 WARRANTY

Manufacturer's standard performance guarantees or warranties that extend beyond a 1 year period shall be provided.

PART 2 PRODUCTS

2.1 WINDOW BLINDS

Each blind, including hardware, accessory items, mounting brackets and fastenings, shall be provided as a complete unit produced by one manufacturer. All parts shall be one color unless otherwise shown, and match the color of the blind slat. Steel features shall be treated for corrosion resistance.

2.1.1 Horizontal Blinds

Horizontal blinds shall conform to FS AA-V-00200, Type II (25.4 mm (1 inch) slats), except as modified below. Blind units shall be capable of nominally 180 degree partial tilting operation and full-height raising. Blinds shall be inside mount as shown.

2.1.1.1 Head Channel and Slats

Head channel shall be steel or aluminum nominal 0.61 mm for Type II. Slats shall be aluminum, not less than 0.203 mm thick, and of sufficient strength to prevent sag or bow in the finished blind. A sufficient amount of slats shall be provided to assure proper control, uniform spacing, and adequate overlap.

2.1.1.2 Controls

The slats shall be tilted by a transparent tilting wand, hung vertically by its own weight, and shall swivel for easy operation. The tilter control shall be of enclosed construction. Moving parts and mechanical drive shall be made of compatible materials which do not require lubrication during normal expected life. The tilter shall tilt the slats to any desired angle and hold them at that angle so that any vibration or movement of ladders and slats will not drive the tilter and change the angle of slats. A mechanism

shall be included to prevent over tightening. The wand shall be of sufficient length to reach to within 1500 mm of the floor.

2.1.1.3 Intermediate Brackets

Intermediate brackets shall be provided for installation of blinds over 1200 mm wide and shall be installed as recommended by the manufacturer.

2.2 COLOR

Color shall be as indicated on the Drawings.

PART 3 EXECUTION

3.1 WINDOW TREATMENT PLACEMENT SCHEDULE

Window covering shall be provided as indicated on the Drawings.

3.2 INSTALLATION

Installation shall be in accordance with the approved detail drawings and manufacturer's installation instructions. Units shall be level, plumb, secure, and at proper height and location relative to window units. The Contractor shall furnish and install supplementary or miscellaneous items in total, including clips, brackets, or anchorages incidental to or necessary for a sound, secure, and complete installation. Installation shall not be initiated until completion of room painting and finishing operations. Upon completion of the installation, window treatments shall be adjusted for form and appearance, shall be in proper operating condition, and shall be free from damage or blemishes. Damaged units shall be repaired or replaced by the Contractor as directed by the Contracting Officer.

End of Section

SECTION 12690

ENTRY FLOOR MAT

PART 1 GENERAL

1.1 SUBMITTALS

Government approval is required for submittals with a "GA" designation; submittals having an "FIO" designation are for information only. The following shall be submitted in accordance with Section 01300 SUBMITTAL PROCEDURES:

SD-01 Data

Entry Mats; FIO.

Manufacturer's standard printed instructions for installation of the system.

SD-04 Drawings

Entry Mats and Frames; FIO.

Shop drawings showing sizes, details of construction, method of construction, method of assembling, hardware materials, colors, method of mounting, location of each item, installation of items, and other details shall be submitted for approval for all items specified herein. Materials fabricated or delivered to the job site before approval of the shop drawings shall be subject to rejection.

SD-14 Samples

Entry Mats; FIO.

A 300 x 300 mm size sample of the specified mat shall be submitted to indicate pattern, color and style of mat. A 12-inch long sample of the recessed mat frame shall be submitted indicating configuration and method of anchorage.

PART 2 PRODUCTS

2.1 ENTRY MAT

Entry mat shall be 100% Antron nylon carpet; weight 28 oz. per square yard, with 1/4 inch pile height and fusion bonded to the backing. Carpet shall be mechanically secured in aluminum tread rails. Color of carpet shall be as indicted on the Drawings.

2.1.1 Tread Rails

6063 T-5 aluminum tread rails shall be "I" shaped, 42.8 mm (1-11/16 inches) deep and 37.7 mm (1-1/2 inches) on center with a 4.8 mm (3/16 inch) spacing between rails.

2.1.2 Recessed Frame

Frame shall be heavy gauge 6063 T-5 aluminum, factory preassembled with mitered corners complete with integral concrete strap anchors, fabricated to the size indicated.

PART 3 EXECUTION

3.1 INSTALLATION

The frame recess shall be verified prior to fabricating the mat. The frame and mat shall be installed in the recess in accordance with the manufacturers instructions and shall be placed after final cleaning of finish floor.

End of Section

SECTION 13083

SEISMIC PROTECTION FOR ARCHITECTURAL, MECHANICAL AND ELECTRICAL SYSTEMS AND EQUIPMENT (ZONE 3)

PART 1 - GENERAL

1.1 APPLICABLE PUBLICATIONS

The publications listed below form a part of this specification to the extent referenced. The publications are referred to in the text by the basic designation only.

FEDERAL SPECIFICATION (Fed. Spec.)

FS RR-W-410	Wire Rope and Strand

AMERICAN NATIONAL STANDARDS INSTITUTE, INC. (ANSI)

ANSI B18.2.1	(1981) Square and Hex Bolts and Screws Inch Series Including Hex Cap Screws and Lag Screws
ANSI B18.2.2	(1972; R 1938) Square and Hex Nuts

AMERICAN SOCIETY FOR TESTING AND MATERIALS (ATSM)

ASTM A 36	(1984a) Structural Steel
ASTM A 307	(1984) Carbon Steel Externally Threaded Standard Fasteners
ASTM A 325	(1984) High-Strength Bolts for Structural Steel Joints
ASTM A 501	(1984) Hot-Formed Welded and Seamless Carbon Steel Structural Tubing
ASTM A 576	(1981) Steel Bars, Carbon, Hot-Wrought, Special Quality
ASTM E 580	(1978, R 1984) Application of Ceiling Suspension Systems for Acoustical Tile and Lay-In Panels in Areas Requiring Seismic Restraint

NATIONAL FIRE PROTECTION ASSOCIATION (NFPA)

NFPA 13	(1985) Installation of Sprinkler Systems

1.2 GENERAL

The requirements for seismic protection measures to be applied to architectural/mechanical/electrical equipment and systems specified herein

are in addition to any other items called for in other sections of these specifications.

1.2.1 Architectural/Mechanical/Electrical Equipment

Architectural/mechanical/electrical equipment to be provided seismic protection shall include:

Boilers	Storage Tanks for Water
Water Heaters	Water and Gas Piping
Drain, Waste and Vent Piping	
Exchangers	Elevators
Water Chiller Units	Control Panels
Engine-Driven Generators	Air Compressors
Air Handling Units	
Pumps with Motors	Switchgear
Light Fixtures	Unit Substations
Motor Control Centers	Transformers
Switchboards (Floor Mounted)	Storage Racks
Suspended Ceiling Assemblies	

1.2.2 Mechanical Systems

Mechanical systems to be provided seismic protection shall include the following:

Chilled Water Distribution Systems
Gas Distribution Systems
Water Supply Systems
Sanitary Sewer Systems
Air Distribution and Return Duct Systems

1.2.3 Electrical Systems

Electrical systems to be provided seismic protection shall include the following:

Conduit
Cable Trays
Bus Bar Systems

1.2.4 Zone

This facility is located in seismic zone 3.

1.2.5 Piping in Buildings:

1.2.5.1 Fire Protection System

Seismic protection of water pipes for fire protection systems will be installed in strict accordance with the provisions of NFPA 13 and appendix A, thereto as specified in SECTION: SPRINKLER SYSTEMS, FIRE PROTECTION.

1.2.5.2 Pipes and Ducts Not Requiring Special Seismic Restraints

Seismic restraints may be omitted from the following installations: (Exception: Critical piping will be installed in accordance with paragraph 1.2.5.3 below.)

a. Gas piping less than 25 mm inside diameter.

b. Piping in boiler and mechanical equipment rooms less than 31.25 mm inside diameter.

c. All other piping less than 62.5 mm inside diameter.

d. All electrical conduit less than 62.6 mm inside diameter.

e. All rectangular air handling ducts less than 0.56 square meters in cross sectional area.

f. All round air handling ducts less than 700 mm diameter.

g. All piping suspended by individual hangers 300 mm or less in length from the top of pipe to the bottom of the support for the hanger.

h. All ducts suspended by hangers 300 mm or less in length from the top of the duct to the bottom of the support for the hanger.

1.2.5.3 Service Pipes Not Related to Fire Protection

Piping not governed by paragraphs 1.2.5.1 and 1.2.5.2 will be installed in accordance with the provisions specified hereinafter.

1.3 SUBMITTALS

Government approval is required for submittals with a "GA" designation; submittals having an "FIO" designation are for information only. The following shall be submitted in accordance with Section 01300 SUBMITTAL PROCEDURES:

SD-01 Data

Bracing and Coupling; GA. Lighting Fixtures in Buildings; GA. Miscellaneous Equipment; GA.

Copies of the design calculations with the detail drawings. Calculations shall be stamped by a registered engineer and shall verify the capability of structural members to which bracing is attached for carrying the load from the brace.

SD-04 Drawings

Bracing and Coupling; GA. Flexible Couplings or Joints; GA. Resilient Vibration Isolation Devices; GA. Lighting Fixtures in Buildings; GA. Miscellaneous Equipment; GA.

Shop Drawings along with catalog cuts, templates, and erection and installation details, as appropriate, for the items specified herein shall be submitted in accordance with the SPECIAL CLAUSES. Submittals shall be

complete in detail; shall indicate thickness, type, grade, class of metal, and dimensions; and shall show construction details, reinforcement, anchorage, and installation with relation to the building construction.

SD-13 Certificates

Flexible Ball Joints; GA.

Flexible ball joints shall be certified to be suitable for the service intended by the manufacturer, based on not less than 2 years' satisfactory operation in a similar application.

PART 2 - PRODUCTS

2.1 MATERIALS AND EQUIPMENT

Materials and equipment shall conform to the respective specifications and other requirements specified below:

2.1.1 Bolts and Nuts

2.1.1.1 Squarehead bolts and heavy hexagon nuts

ANSI B18.2.1 and B18.2.2, and ASTM A\307 or A\576.

2.1.1.2 Bolts, underground

ASTM A\325.

2.1.2 Sway Brace

Materials used for members listed in tables I through III of this specification, except for pipes, shall be structural steel conforming with ASTM A\36. Steel pipes shall conform to ASTM A\501.

2.1.3 Flexible Couplings

Flexible couplings shall have same pressure ratings as adjoining pipe.

2.1.3.1 Flexible Ball Joints

Flexible ball joints conforming to the following requirements may be employed on aboveground piping. Joints shall have cast or wrought steel casing and ball parts capable of 360-degree rotation plus not less than 15-degree angular movement. Joints shall be certified to be suitable for the service intended by the manufacturer, based on not less than 2 years' satisfactory operation in a similar application.

2.1.3.2 Flexible Couplings and Joints of the Mechanical Joint Types may be Used for Aboveground or Underground Piping

a. Mechanical couplings for steel or cast iron pipe shall be of the sleeve type and shall provide a tight flexible joint under all reasonable conditions, such as pipe movement caused by expansion, contraction, slight settling or shifting of the ground, minor variations in trench gradients, and traffic vibrations. Where

permitted in other sections of these specifications, joints utilizing split-half couplings with grooved or shoulder pipe ends may be used.

b. Sleeve-type couplings shall be used for joining plain end pipe sections. The couplings shall consist of one steel middle ring, two steel followers, two gaskets, and necessary steel bolts and nuts to compress the gaskets. Underground bolts shall be high strength type as specified hereinbefore.

2.1.4 Guy Wires

Guy wires shall conform to Fed. Spec. RR-W-410 as follows:

3.9 mm diameter	Type V, Class 1
4.7 mm to 7.8 mm diameter	Type V, Class 2
6.25 mm to 15.6 mm diameter	Type I, Class 2

PART 3 - EXECUTION

3.1 SWAY BRACES

Sway braces shall be installed on piping and duct not otherwise rigidly anchored to preclude damage during seismic activity. Bracing shall conform to approved arrangements. Provisions of this paragraph apply to all piping within a 1500 mm line around outside of building unless buried in the ground. Piping grouped for support on trapeze-type hangers shall be braced at the same intervals as determined by the smallest diameter pipe of the group. Hanger rods shall be increased in cross sectional area proportionate to the increased weight per linear 300 mm of pipe and contents supported at each trapeze hanger. No trapeze-type hanger shall be secured with less than two 50 mm bolts. Bracing rigidly attached to pipe flanges, or similar, shall not be used where it would interfere with thermal expansion of piping.

3.2 SWAY BRACES FOR PIPING

3.2.1 Transverse Sway Bracing

Transverse sway bracing shall be provided at intervals not to exceed those given in table I, except for cast iron soil pipe, which shall be braced at not more than 3000 mm intervals.

TABLE I

MAXIMUM SPAN FOR TRANSVERSE SWAY BRACES

Pipe Diameter	Standard Weight Steel Pipe - 40S		Ex. Strong Steel Pipe - 80S		Copper Tube Type L	
(mm)	L (m)	F (kg)	L (m)	F (kg)	L (m)	F (kg)
25	7.3	24.95	7.3	29.48	3.65	6.8
37.5	8.53	49.9	8.34	63.5	3.96	13.6
50	9.75	81.65	10.06	104.33	4.57	24.95
62.5	10.67	190.51	10.97	167.83	5.18	40.82
75	11.28	199.58	11.88	258.55	5.79	54.43
87.5	12.19	263.09	12.8	335.66	6.09	81.65

100	13.11	349.27	13.41	435.46	6.4	108.86
125	13.72	521.64	14.63	689.47	6.7	172.37
150	15.24	771.12	15.54	997.92	7.32	263.09
200	16.46	1356.26	17.98	1868.83	8.84	562.46
250	17.98	2204.5	19.81	2785.10	9.45	952.56
300	19.51	3107.16	20.42	3755.81	10.36	1433.38

3.2.2 Longitudinal Sway Bracing

Longitudinal sway bracing shall be provided at 12.12 m intervals.

3.2.3 Vertical Runs

Vertical runs of piping shall be braced at not more than 3000 mm vertical intervals. For smaller tubing, bracing shall be provided at no more than 1200 mm spacing.

3.2.4 Anchor Rods, Angles, and Bars

Anchor rods, angles, and bars shall be bolted to either pipe clamps or pipe flanges at one end and cast-in-place concrete or masonry insert or clip angles bolted to the steel structure on the other end. Rods shall be solid metal or pipe as specified hereinafter. Anchor rods, angles, and bars shall not exceed lengths given in table II.

TABLE II

MAXIMUM LENGTH FOR ANCHOR BRACES

Allowable Loads*

Type	Size (mm)	Maximum Length*	(kips)
Angles	37.5 x 37.5 x 6.25	1450 mm	5.7
	50 x 50 x 6.25	1950 mm	7.8
	62.5 x 37.5 x 6.25	2400 mm	9.8
	75 x 62.5 x 6.25	2650 mm	10.8
	75 x 75 x 6.25	2950 mm	11.9
Rods	18.75	925 mm	3.7
	21.88	1100 mm	5.0
Flat Bars	37.5 x 6.25	350 mm	3.1
	50 x 6.25	350 mm	4.1
	50 x 9.38	525 mm	6.2
Pipes (40S)	25	2100 mm	4.1
	31.25	2700 mm	5.5
	37.5	3100 mm	6.6
	50	3925 mm	8.9

*Based on the slenderness ratio of l/r = 200 and ASTM A 36 steel.

3.2.5 Clamps

Clamps on uninsulated pipes shall be applied directly to pipe. Insulated piping shall have clamps applied over insulation vapor barrier with high density inserts and metal protection shields under each clamp.

3.2.6 Bolts

Bolts used for attachment of anchors to pipe and structure shall be not less than 50 mm diameter.

3.3 SWAY BRACES FOR DUCTS

3.3.1 Transverse Sway Bracing

Transverse sway bracing shall be provided at each horizontal turn of 45 degrees or more at the end of each duct run and otherwise at each 9.1 m interval. Walls which ducts penetrate may be considered transverse braces.

3.3.2 Longitudinal Sway Bracing

Longitudinal sway bracing shall be provided at 18.29 m intervals. Transverse bracing for one duct section may also act as longitudinal bracing for a duct section connected perpendicular to it, if the bracing is installed within 1200 mm of the intersection, and it is sized for the larger duct.

3.3.3 Bracing Angles:

Bracing angles for rectangular ducts shall be in accordance with table III.

TABLE III

SCHEDULE OF BRACING FOR RECTANGULAR DUCTS

Vertical Duct Size*	Longitudinal Angles	Diagonal Angles	Horizontal Angles	Bolt Size
750 mm sq	50 x 50 x 16 gage	50 x 50 x 16 gage	50 x 50 x 16 gage	6.25 mm
1050 mm sq	62.5 x 62.5 x 16 gage	62.5 x 62.5 x 16 gage	62.5 x 62.5 x 16 gage	6.25 mm
1350 mm sq	62.5 x 62.5 x 16 gage	62.5 x 62.5 x 14 gage	62.5 x 62.5 x 16 gage	9.38 mm
1500 mm sq	75 x 75 x 16 gage	75 x 75 x 14 gage	75 x 75 x 16 gage	9.38 mm

*The duct's maximum dimension shall govern what bracing is required. Example: A 900 mm by 1500 mm duct shall be braced as a 1500 mm (60-inch) square duct.

3.4 SPREADERS

Spreaders shall be provided between racked or adjacent piping runs to prevent contact during seismic activity whenever pipe or insulated pipe surfaces are less than 100 mm apart or four times the maximum displacement due to seismic force. Spreaders to be applied at same interval as sway

braces. Spreaders shall be applied to surface of bare or insulated hot pipe and over insulation utilizing high density inserts and pipe protection shields where vapor barrier-type insulation is employed.

3.5 FLEXIBLE COUPLINGS OR JOINTS

3.5.1 Building Piping

Flexible couplings or joints in building piping shall be provided at bottom of all pipe risers 87.5 mm size and larger. Cast iron waste and vent piping need only comply with these provisions when calked joints are used. Flexible bell and spigot pipe joints using rubber gaskets or no-hub fittings may be used at each branch adjacent to tees and elbows for underground waste piping inside of building to comply with these requirements.

3.5.2 Underground Piping

All underground piping and 100 mm or larger conduit, except heat distribution system, shall have flexible couplings installed. Additional flexible couplings shall be provided as follows:

a. On each side of the joints of demarkation between soils having widely differing degrees of consolidation.

b. At all points that can be considered to act as anchors.

c. On every branch of a tee and each side of an elbow.

3.6 EMERGENCY GAS SUPPLY CONNECTIONS

Facilities which are to be connected to natural gas distribution systems shall be provided with an above ground, locked, valved, and capped emergency gas supply connection. Provisions shall be made for attachment of a portable, commercial sized gas cylinder system to this connection. Connection shall be located within 300 mm of the exterior wall and clearly marked with an appropriate metal sign mounted on wall above. Provide an automatic device to safely interrupt the flow of gas to the building in case of an earthquake.

3.7 ANCHOR BOLTS

All rigidly mounted equipment will have a minimum of four anchor bolts securely fastened through bases. Two nuts shall be provided on each bolt. Anchor bolts must conform to ASTM A\307. Anchor bolts shall have an embedded straight length equal to at least ten times the nominal diameter of the bolt and shall conform to the following table of sizes for various equipment weights:

Maximum Equipment Weight (Kg)	Minimum Bolt Sizes (mm)* Zone 3
225	13
450	13
2250	13
4500	13
9000	13
13500	13

22500	16
45000	**

*Based on four bolts per item, use equivalent total cross sectional areas when more than four bolts per item are provided. Anchor bolts that exceed normal depth of equipment foundation piers or pads shall either extend into concrete floor or the foundation shall be increased in depth to accommodate bolt lengths.

When height-to-width ratio of the equipment exceeds 4.4, overturning must be investigated.

3.8 MULTIDIRECTIONAL SEISMIC SNUBBERS

Selection of anchor bolts securing multidirectional seismic snubbers to equipment base and foundations shall follow the same procedure as in paragraph ANCHOR BOLTS, except that an equipment weight equal to five times the actual equipment weight shall be used. Snubbers employing elastomeric pads shall be installed on all floor-or slab-mounted equipment. These snubbers shall provide 6.25 mm free vertical and horizontal movement from the static deflection point. Snubber medium shall consist of multiple pads of cotton duct and neoprene or other suitable materials arranged around a flanged steel trunnion so both horizontal and vertical forces are resisted by the snubber medium.

3.9 EQUIPMENT SWAY BRACING

Equipment sway bracing shall be provided for all items supported from overhead floor or roof structures. Braces shall consist of angles, rods, bars, or pipes run at a 45 degree angle from the equipment frame to the building structure secured at both ends with not less than 1/2-inch bolts. Braces shall conform to table II. Bracing shall be provided in two planes of directions, 90 degrees apart, for each item of equipment. Sufficient braces shall be provided for equipment to resist a horizontal force equal to 113 percent of the weight of equipment without exceeding safe working stress of bracing components. Details of all equipment bracing shall be submitted for approval. In lieu of bracing with vertical supports, these items may be supported with hangers inclined at 45 degrees, provided that supporting members are properly sized to support operating weight of equipment when inclined at a 45 degree angle.

3.10 LIGHTING FIXTURES IN BUILDINGS

In addition to the requirements of the preceeding paragraphs, lighting fixtures and supports will conform to the following:

3.10.1 Materials and Construction

a. Fixture supports shall be malleable iron.

b. Loop and hook or swivel hanger assemblies for pendant fixtures shall be fitted with a restraining device to hold the stem in the support position during earthquake motions. The motion of swivels or hinged joints shall not cause sharp bends in conductors or damage to insulation.

c. Recessed fluorescent individual or continuous row fixtures shall be supported by a seismic resistant suspended ceiling support system and shall be bolted thereto at each corner of the fixture; or shall be provided with fixture support wires attached to the building structural members using two wires for individual fixtures and one wire per unit of continuous row fixtures.

d. A supporting assembly that is intended to be mounted on an outlet box shall be designed to accommodate mounting features on 4-inch boxes, 3-inch plaster rings, and fixture studs.

e. Surface mounted fluorescent individual or continuous row fixtures shall be attached to a seismic resistant ceiling support system. Fixture support devices for attaching to suspended ceilings shall be a locking-type scissor clamp or a full loop band that will securely attach to the ceiling support.

f. Each wall mounted emergency light unit shall be secured in a manner to hold the unit inplace during a seismic disturbance.

3.10.2 Tests

In lieu of the requirements for equipment supports, lighting fixtures and the complete fixture supporting assembly may be tested as specified hereinafter. Such tests shall be conducted by an approved and independent testing laboratory, and the results of such tests shall specifically state whether or not the lighting fixture supports satisfy the requirements given herein.

a. Test Equipment: To simulate earthquake motion, fixtures and supports shall be attached to a carriage suspended on rollers from an overhead track. A gear motor and crank assembly shall be used to provide oscillatory motion of approximately one cycle per second. The exact number of cycles per second and the actual dimensions of the crank apparatus shall be adjusted to produce a minimum carriage acceleration of 0.28g. The actual fixture mounting surface shall be on the underside of the carriage and shall provide capacity for orienting the fixture in a horizontal plane in various positions ranging from parallel to perpendicular to the line of traverse.

b. Test Requirements: All tests shall be conducted with the maximum fixture weight so as to produce the most severe loading conditions. Fixtures having stems shall be tested with the actual stem lengths to be used. Tests shall be of 1 minute duration with the mounting surface in the line of traverse, at 45 degrees to the line of traverse, and at 90 degrees to the line of traverse. A total of two fixtures shall be tested in each of the above positions. After each of the six tests, the complete stem assemblies from fixtures having stem assemblies shall be subjected to a tensile strength test. The sample shall withstand, without failure, a force of not less than four times the weight it is intended to support.

c. Acceptance: No component of a fixture nor its supports shall be accepted individually. For acceptance, the fixture and its supports shall exhibit no undue damage, and no component of the fixture shall fail or fall from the fixture during testing.

3.10.3 Design Criteria

In lieu of the above test requirements, lighting fixtures shall be designed to resist a lateral force of 113 percent of the fixture weight.

3.11 SUSPENDED ACOUSTICAL CEILING ASSEMBLIES

The structural members of ceiling systems used primarily to support acoustical tile panels or acoustical panel lay-in tiles, with or without lighting fixtures, ceiling-mounted air terminals, and ceiling-mounted services, shall conform to the following:

3.11.1 Design Criteria

The main runners and cross runners and their splices and intersection connections shall be designed for two times the design load or ultimate axial tension or compression (minimum 54.43 kg). The connections at the splices and intersections shall be of a mechanical interlocking type that cannot easily be disengaged. All ceiling structural systems shall be designed to withstand required vertical load as well as a lateral force of 23 percent of the ceiling weight. The ceiling weight shall include all lighting fixtures and other equipment that are laterally supported by the ceiling and shall not be less than 19.53 kg per square meter. Ceiling areas of 13.38 square meters or less surrounded by walls that connect directly to the structure above shall be exempt from the lateral load standards of this specification.

3.11.2 Minimum Installation Requirements

Minimum installation requirements shall be in accordance with ASTM E 580 as follows:

a. Vertical Support: Hanger wires supporting a maximum tributary ceiling area of 1.49 square meters shall be a minimum of 12 gage in diameter. The size of wires supporting a tributary ceiling area of greater than 1.49 square meters shall be substantiated by design calculations. Hanger attachment devices used in ceiling systems not exceeding 19.53 kg per square meter shall be capable of supporting a minimum allowable load of 45.36 kg. Hanger attachement devices used in ceiling systems exceeding 19.53 kg per square meter shall be capable of supporting the design load and shal be substantiated by design calculations. Hangers shall be plumb and shall not attach to or bend around interfacing duct pipes or similar obstructions. If hangers must be splayed more than one horizontal to six vertical, the resulting horizontal force shall be offset by bracing, counter splaying, or other acceptable means and substantiated by design calculations. The terminal end of each cross runner or main runner shall be supported independently and within 200 mmof a wall.

b. Lateral Support: In lieu of the design criteria stated above, where ceiling loads do not exceed 19.53 kg per square meter, lateral support for the ceiling system may be provided by four wires of minimum No. 12 gage, splayed in four directions, 90 degrees apart, and connected to the main runner within 50 mm of the cross runner and to the structure above at an angle not exceeding 45 degrees from the plane of the ceiling. These lateral support points shall be placed 3600 mm

on center in each direction with the first point within 1200 mm of each wall. Allowances shall be made for lateral movement of the system. Main runners and cross runners may be attached at two adjacent walls with clearance between the wall and the runners maintained at the other two walls.

3.11.3 Lighting Fixture and Air Diffuser Supports

Lighting fixtures and air diffuser supports shall be designed and installed to meet the requirements of equipment supports in the preceeding paragraphs of this specification with the following exceptions:

a. Recessed lighting fixtures not over 25.4 kg in weight and suspended and pendant hung fixtures not over 9 kg in weight may be supported and attached directly to the ceiling system runners by a positive attachement such as screws or bolts.

b. Air diffusers that weigh not more than 9 kg and that receive no tributary loading from ductwork may be positively attached to and supported by the ceiling runners.

3.12 MISCELLANEOUS EQUIPMENT

The following specific items of equipment to be furnished under this contract shall be constructed and assembled so as to be capable of withstanding the horizontal equivalent static force of 0.23 times the operating weight of the equipment, at vertical center of gravity of the equipment without causing permanent deformation, dislocations, separation of components, or other damage, which would render the equipment inoperative for significant periods of time following an earthquake.

Miscellaneous Equipment:

Boilers
Chillers
Air Handling Units
Engine-Generators
Substations
Transformers
Switch Boards and Switch Gears
Motor Control Centers
Free Standing Electric Motors

END OF SECTION

SECTION 15250

THERMAL INSULATION FOR MECHANICAL SYSTEMS
11/96

PART 1 GENERAL

1.1 REFERENCES

The publications listed below form a part of this specification to the extent referenced. The publications are referred to in the text by basic designation only. At the discretion of the government, the manufacturer of any material supplied will be required to furnish test reports pertaining to any of the tests necessary to assure compliance with the standard or standards referenced in this specification.

AMERICAN SOCIETY FOR TESTING AND MATERIALS (ASTM)

ASTM A 580	(1995a) Stainless and Heat-Resisting Steel Wire
ASTM B 209	(1996) Aluminum and Aluminum-Alloy Sheet and Plate
ASTM C 195	(1990) Mineral Fiber Thermal Insulating Cement
ASTM C 449	(1995) Mineral Fiber Hydraulic-Setting Thermal Insulating and Finishing Cement
ASTM C 533	(1985; R 1990) Calcium Silicate Block and Pipe Thermal Insulation
ASTM C 534	(1994) Preformed Flexible Elastomeric Cellular Thermal Insulation in Sheet and Tubular Form
ASTM C 547	(1995) Mineral Fiber Pipe Insulation
ASTM C 552	(1991) Cellular Glass Thermal Insulation
ASTM C 553	(1992) Mineral Fiber Blanket Thermal Insulation for Commercial and Industrial Applications
ASTM C 612	(1993) Mineral Fiber Block and Board Thermal Insulation
ASTM C 647	(1995) Properties and Tests of Mastics and Coating Finishes for Thermal Insulation
ASTM C 795	(1992) Thermal Insulation for Use in Contact With Austenitic Stainless Steel

ASTM C 871	(1995) Test Methods for Chemical Analysis of Thermal Insulation Materials for Leachable Chloride, Fluoride, Silicate, and Sodium Ions
ASTM C 916	(1985; Rev 1990) Adhesives for Duct Thermal Insulation
ASTM C 920	(1994) Elastomeric Joint Sealants
ASTM C 921	(1989 R; 1996) Determining the Properties of Jacketing Materials for Thermal Insulation
ASTM C 1126	(1989; R 1994) Specification for faced or Unfaced Rigid Cellular Phenolic Thermal Insulation
ASTM D 3278	(1989) Test Methods for Flash Point of Liquids by Setaflash Closed-Cup Apparatus
ASTM E 84	(1996a) Surface Burning Characteristics of Building Materials
ASTM E 96	(1995) Water Vapor Transmission of Materials

MANUFACTURERS STANDARDIZATION SOCIETY OF THE VALVE AND FITTINGS INDUSTRY (MSS)

MSS SP-69	(1996) Pipe Hangers and Supports - Selection and Application

MIDWEST INSULATION CONTRACTORS ASSOCIATION (MICA)

MICA-01	(1993) National Commercial & Industrial Insulation Standards

1.2 SYSTEM DESCRIPTION

Field-applied insulation and accessories on mechanical systems shall be as specified herein; factory-applied insulation is specified under the piping, duct or equipment to be insulated. Insulation of chilled water systems outside of buildings shall be as specified in Section 15651 PREFABRICATED UNDERGROUND COOLING DISTRIBUTION SYSTEM. Field applied insulation materials required for use on Government-furnished items as listed in the SPECIAL CONTRACT REQUIREMENTS shall be furnished and installed by the Contractor.

1.3 GENERAL QUALITY CONTROL

1.3.1 Standard Products

Materials shall be the standard products of manufacturers regularly engaged in the manufacture of such products and shall essentially duplicate items that have been in satisfactory use for at least 2 years prior to bid opening.

1.3.2 Installer's Qualifications

Qualified installers shall have successfully completed three or more similar type jobs within the last 5 years.

1.3.3 Surface Burning Characteristics

Unless otherwise specified, insulation not covered with a jacket shall have a flame spread rating no higher than 75 and a smoke developed rating no higher than 150. The outside surface of insulation systems which are located in air plenums, in ceiling spaces, and in attic spaces shall have a flame spread rating no higher than 25 and a smoke developed rating no higher than 50. Insulation materials located exterior to the building perimeter are not required to be fire-rated. Flame spread and smoke developed ratings shall be determined by ASTM E 84. Insulation shall be tested in the same density and installed thickness as the material that shall be used in the actual construction. Jackets shall comply with the flame spread and smoke developed ratings of 25/50 as determined by ASTM E 84.

1.3.4 Identification of Materials

Packages or standard containers of insulation, jacket material, cements, adhesives, and coatings delivered for use, and samples required for approval shall have manufacturer's stamp or label attached giving the name of the manufacturer and brand, and a description of the material.

1.4 SUBMITTALS

Government approval is required for submittals with a "GA" designation; submittals having an "FIO" designation are for information only. The following shall be submitted in accordance with Section 01300 SUBMITTAL PROCEDURES:

SD-14 Samples

Thermal Insulation Materials; FIO.

A complete list of materials, including manufacturer's descriptive technical literature, performance data, catalog cuts, and installation instructions. The product number, k-value, thickness and furnished accessories for each mechanical system requiring insulation shall be included. Materials furnished under this section of the specification shall be submitted at one time.

After approval of materials and prior to applying insulation a booklet shall be prepared and submitted for approval. The booklet shall contain marked-up MICA-01 plates (or detail drawings showing the insulation material and insulating system) for each pipe, duct, or piece of equipment which is/are required to be insulated per this specification. The MICA plates shall be marked-up showing the materials to be installed in accordance with the requirements of this specification for the specific insulation application. The Contractor shall submit all MICA Plates required to show the entire insulating system, including Plates required to show insulation penetrations, vessel bottom and top heads, legs, and skirt insulation as applicable. If the Contractor elects to submit detailed drawings instead of marked-up MICA Plates, the detail drawings shall show cut-away, section views, and details indicating each component of the insulation system and

showing provisions for insulating jacketing, and sealing portions of the equipment. For each type of insulation installation on the drawings, provide a label which identifies each component in the installation (i.e., the duct, insulation, adhesive, vapor retarder, jacketing, tape, mechanical fasteners, etc.) Indicate insulation by type and manufacturer. Three copies of the booklet shall be submitted at the jobsite to the Contracting Officer. One copy of the approved booklet shall remain with the insulation Contractor's display sample and two copies shall be provided for Government use.

1.5 STORAGE

Materials shall be delivered in the manufacturer's unopened containers. Materials delivered and placed in storage shall be provided with protection from weather, humidity, dirt, dust and other contaminants by the Contractor. Insulation material and supplies that become dirty, dusty, wet, or otherwise contaminated may be rejected by the Contracting Officer.

PART 2 PRODUCTS

2.1 GENERAL MATERIALS

Materials shall be compatible and shall not contribute to corrosion, soften, or otherwise attack surfaces to which applied in either the wet or dry state. Materials to be used on stainless steel surfaces shall meet ASTM C 795 requirements. Materials shall be asbestos free and conform to the following:

2.1.1 Adhesives

2.1.1.1 Acoustical Lining Insulation Adhesive

Insulation shall be applied in cut-to-size pieces attached to the interior of the duct with a nonflammable, fire-resistant adhesive conforming to ASTM C 916, Type I. Exposed edges of the liner at the duct ends and at other joints where the lining will be subject to erosion shall be coated with a heavy brush coat of the nonflammable, fire-resistant adhesive to prevent delamination of glass fibers.

2.1.1.2 Mineral Fiber Insulation Cement

Cement shall be in accordance with ASTM C 195.

2.1.1.3 Lagging Adhesive

Lagging adhesives shall be nonflammable and fire-resistant and shall have flame spread and smoke developed ratings of 25/50 when measured in accordance with ASTM E 84. Adhesives shall be either the Class 1 or Class 2 type as defined here. Class 1 adhesive shall be pigmented red and be suitable for bonding fibrous glass cloth to faced and unfaced fibrous glass insulation board; for bonding cotton brattice cloth to faced and unfaced fibrous glass insulation board; for sealing edges of and bounding fibrous glass tape to joints of fibrous glass board; or for bonding lagging cloth to thermal insulation. Class 2 adhesive shall be pigmented white and be suitable for attaching fibrous glass insulation to metal surfaces. Lagging adhesives shall be applied in strict accordance with the manufacturer's recommendations.

2.1.2 Contact Adhesive

Adhesive may be dispersed in a nonhalogenated organic solvent with a low flash point (flash point less than minus 3.9 degrees C when tested in accordance with ASTM D 3278) or, dispersed in a nonflammable organic solvent which shall not have a fire point below 94 degrees C. The adhesive shall not adversely affect, initially or in service, the insulation to which it is applied, nor shall it cause any corrosive effect on metal to which it is applied. Any solvent dispersing medium or volatile component of the adhesive shall have no objectionable odor and shall not contain any benzene or carbon tetrachloride. The dried adhesive shall not omit nauseous, irritating, or toxic volatile matters or aerosols when the adhesive is heated to any temperature up to 100 degrees C. The adhesive shall be nonflammable and fire resistant.

2.1.3 Caulking

ASTM C 920, Type S, Grade NS, Class 25, Use A.

2.1.4 Corner Angles

Nominal 0.4060 mm aluminum 25 x 25 mm with factory applied kraft backing. Aluminum shall be ASTM B 209, Alloy 3003, 3105, or 5005.

2.1.5 Finishing Cement

Mineral fiber hydraulic-setting thermal insulating cement ASTM C 449.

2.1.6 Fibrous Glass Cloth and Glass Tape

Fibrous glass cloth and glass tape shall have flame spread and smoke developed ratings of no greater than 25/50 when measured in accordance with ASTM E 84. Fibrous glass cloth and tape; 20 x 20 maximum size mesh. Tape shall be 100 mm wide rolls. Class 3 tape shall be 0.15 kg per square meter.

2.1.7 Staples

Outward clinching type monel.

2.1.8 Jackets

ASTM C 921, Type I, maximum moisture vapor transmission 0.02 perms, minimum puncture resistance 50 Beach units on all surfaces except concealed ductwork, where a minimum puncture resistance of 25 Beach units is acceptable. Minimum tensile strength, 6.1 N/mm width. ASTM C 921, Type II, minimum puncture resistance 25 Beach units, tensile strength minimum 3.5 N/mm width. Jackets used on insulation exposed in finished areas shall have white finish suitable for painting without sizing.

2.1.8.1 White Vapor Retarder ASJ (All Service Jacket)

For use on hot/cold pipes, ducts, or equipment. Vapor retarder jackets used on insulation exposed in finished areas shall have white finish suitable for painting without sizing.

2.1.8.2 Aluminum Jackets

Aluminum jackets shall be corrugated, embossed or smooth sheet, 0.4060 mm nominal thickness; ASTM B 209, Temper H14, Temper H16, Alloy 3003, 5005, or 3105 with factory applied moisture retarder. Corrugated aluminum jacket shall not be used outdoors. Aluminum jacket securing bands shall be Type 304 stainless steel, 0.3960 mm thick, 12.7 mm wide for pipe under 300 mm diameter and 19.1 mm wide for pipe over 300 mm diameter. Aluminum jacket circumferential seam bands shall be 50.8 x 0.4060 mm aluminum matching jacket material. Bands for insulation below ground shall be 19.1 x 0.5080 mm thick stainless steel, or fiberglass reinforced tape. The jacket may, at the option of the Contractor, be provided with a factory fabricated Pittsburg or "Z" type longitudinal joint. When the "Z" joint is used, the bands at the circumferential joints shall be designed by the manufacturer to seal the joints and hold the jacket in place.

2.1.8.3 Polyvinyl Chloride (PVC) Jackets

Polyvinyl chloride (PVC) jacket and fitting covers shall have high impact strength, UV resistant rating or treatment and moderate chemical resistance with minimum thickness 0.7620 mm. Insulation under PVC jacket shall meet jacket manufacturer's written recommendations.

2.1.9 Vapor Retarder Coating

The vapor retarder coating shall be fire and water resistant and appropriately selected for either outdoor or indoor service. Color shall be white. The water vapor permeance of the compound shall not exceed 0.05 perm and shall be determined according to procedure B of ASTM E 96 utilizing apparatus described in ASTM E 96. The coating shall be a nonflammable, fire resistant type. The flash point of the compound shall not be less than 26.7 degrees C and shall be determined in accordance with ASTM D 3278. All other application and service properties shall be in accordance with ASTM C 647.

2.1.10 Wire

Soft annealed ASTM A 580 Type 302, 304 or 316 stainless steel, 16 or 18 gauge.

2.2 PIPE INSULATION MATERIALS

Pipe insulation materials shall be as follows:

2.2.1 Aboveground Cold Pipeline

Insulation for minus 34 degrees C to plus 16 degrees C shall be as follows:

2.2.1.1 Cellular Glass

ASTM C 552, Type II, and Type III.

2.2.1.2 Flexible Cellular Insulation

ASTM C 534, Type I or II. Type II shall have vapor retarder skin on both sides of the insulation.

2.2.1.3 Phenolic Insulation

ASTM C 1126, Type III. A maximum allowable leachable chloride content shall comply with ASTM C 795 when tested in accordance with ASTM C 871.

2.2.2 Aboveground Hot Pipeline

For aboveground hot pipeline above 16 degrees C insulation the following requirements shall be met.

2.2.2.1 Mineral Fiber

ASTM C 547, Class 1 or Class 2 as required for the operating temperature range.

2.2.2.2 Calcium Silicate

ASTM C 533, Type I indoor only, or outdoors above 121 degrees C pipe temperature.

2.2.2.3 Cellular Glass

ASTM C 552, Type II and Type III.

2.2.2.4 Flexible Cellular Insulation

ASTM C 534, Type I or II to 93 degrees C service.

2.2.2.5 Phenolic Insulation

ASTM C 1126 Type III to 121 C service. A maximum allowable leachable chloride content shall comply with ASTM C 795 when tested in accordance with ASTM C 871.

2.2.3 Below ground Pipeline Insulation

ASTM C 552, Type II.

2.3 DUCT INSULATION MATERIALS

Duct insulation materials shall be as follows:

2.3.1 Rigid Mineral Fiber

ASTM C 612, Class 1.

2.3.2 Flexible Mineral Fiber

ASTM C 553, Type I, Class B-2.

2.3.3 Cellular Glass

ASTM C 552, Type I.

2.3.4 Phenolic Foam

ASTM C 1126 Type II. A maximum allowable leachable chloride content shall comply with ASTM C 795 when tested in accordance with ASTM C 871.

2.3.5 Flexible Cellular

ASTM C 534 Type II.

2.4 EQUIPMENT INSULATION MATERIALS

Equipment insulation materials shall be as follows:

2.4.1 Cold Equipment Insulation

For temperatures below 16 degrees C.

2.4.1.1 Cellular Glass

ASTM C 552, Type I, Type III, or Type IV as required.

2.4.1.2 Flexible Cellular Insulation

ASTM C 534, Type II.

2.4.1.3 Phenolic Foam

ASTM C 1126 Type II. A maximum allowable leachable chloride content shall comply with ASTM C 795 when tested in accordance with ASTM C 871.

2.4.2 Hot Equipment Insulation

For temperatures above 16 degrees C.

2.4.2.1 Rigid Mineral Fiber

ASTM C 612, Type 2, 3, 4 or 5 as required for temperature encountered to 982 degrees C.

2.4.2.2 Flexible Mineral Fiber

ASTM C 553, Type 1, 2, 3, 4, 5, 6, or 7 as required for temperature encountered to 649 degrees C.

2.4.2.3 Calcium Silicate

ASTM C 533, Type I, indoors only, or outdoors above 121 degrees C. Pipe shape may be used on diesel engine exhaust piping and mufflers to 649 degrees C.

2.4.2.4 Cellular Glass

ASTM C 552, Type I, Type III, or Type IV as required.

2.4.2.5 Flexible Cellular Insulation

ASTM C 534, Type II, to 93 degrees C.

2.4.2.6 Phenolic Foam

ASTM C 1126 Type II to 121 degrees C. A maximum allowable leachable chloride content shall comply with ASTM C 795 when tested in accordance with ASTM C 871.

PART 3 EXECUTION

3.1 APPLICATION - GENERAL

3.1.1 Installation

Except as otherwise specified, material shall be installed in accordance with the manufacturer's written instructions. Insulation materials shall not be applied until tests and heat tracing specified in other sections of this specification are completed. Material such as rust, scale, dirt and moisture shall be removed from surfaces to receive insulation. Insulation shall be kept clean and dry. Insulation shall not be removed from its shipping containers until the day it is ready to use and shall be returned to like containers or equally protected from dirt and moisture at the end of each workday. Insulation that becomes dirty shall be thoroughly cleaned prior to use. If insulation becomes wet or if aforementioned cleaning does not restore the surfaces to like new condition, the insulation will be rejected, and shall be immediately removed from the jobsite. Joints shall be staggered on multi layer insulation. Mineral fiber thermal insulating cement shall be mixed with demineralized water when used on stainless steel surfaces. Insulation, jacketing and accessories shall be installed in accordance with MICA-01 standard plates except where modified herein or on the drawings.

3.1.2 Fire stopping

Where pipes and ducts pass through fire walls, fire partitions, above grade floors, and fire rated chase walls, the penetration shall be sealed with Fire stopping materials as specified in Section 07270 FIRE STOPPING.

3.1.3 Painting and Finishing

Painting shall be as specified in Section 09900 PAINTING, GENERAL.

3.1.4 Flexible Cellular Insulation

Flexible cellular insulation shall be installed with seams and joints sealed with a contact adhesive. Flexible cellular insulation shall not be used on surfaces greater than 93 degrees C. Seams shall be staggered when applying multiple layers of insulation. Insulation exposed to weather and not shown to have jacketing shall be protected with two coats of UV resistant finish as recommended by the manufacturer after the adhesive is dry.

3.1.5 Welding

No welding shall be done on piping, duct or equipment without written approval of the Contracting Officer. The capacitor discharge welding process may be used for securing metal fasteners to duct.

3.1.6 Pipes/Ducts/Equipment which Require Insulation

Insulation is required, unless stated otherwise, on all pipes, ducts, or equipment, which operate at or below 15.6 C and at or above 26.7 C.

3.2 PIPE INSULATION INSTALLATION

3.2.1 Pipe Insulation

3.2.1.1 General

Pipe insulation shall be installed on aboveground hot and cold pipeline systems as specified below to form a continuous thermal retarder, including straight runs, fittings and appurtenances unless specified otherwise. Installation shall be with full length units of insulation and using a single cut piece to complete a run. Cut pieces or scraps abutting each other shall not be used. Pipe insulation shall be omitted on the following:

a. Pipe used solely for fire protection.

b. Chromium plated pipe to plumbing fixtures. However, fixtures for use by the physically handicapped shall have the hot water supply and drain, including the trap, insulated where exposed.

c. Sanitary drain lines.

d. Unions in pipe above 16 degrees C.

e. Strainers in pipe above 16 degrees C.

f. Check valves in pipe above 16 degrees C.

g. Air chambers.

3.2.1.2 Pipes Passing Through Sleeves

a. Pipe insulation shall be continuous through the sleeve.

b. An aluminum jacket with factory applied moisture retarder shall be provided over the insulation wherever penetrations require sealing.

c. Where penetrating interior walls, the aluminum jacket shall extend 50 mm beyond either side of the wall and shall be secured on each end with a band.

d. Where penetrating floors, the aluminum jacket shall extend from a point below the backup material to a point 250 mm above the floor with one band at the floor and one not more than 25 mm from the end of the aluminum jacket.

e. Where penetrating waterproofed floors, the aluminum jacket shall extend from below the backup material to a point 50 mm above the flashing with a band 25 mm from the end of the aluminum jacket.

f. Where penetrating exterior walls, the aluminum jacket required for pipe exposed to weather shall continue through the sleeve to a point 50 mm beyond the interior surface of the wall.

g. Where penetrating roofs, pipe shall be insulated as required for interior service to a point flush with the top of the flashing and sealed with vapor retarder coating. The insulations for exterior application shall butt tightly to the top of flashing and interior insulation. The exterior aluminum jacket shall extend 50 mm down beyond the end of the insulation to form a counter flashing. The flashing and counter flashing shall be sealed underneath with caulking.

h. In high abuse areas such as janitor closets and traffic areas in equipment rooms, kitchens, and mechanical rooms, aluminum jackets shall be utilized. Pipe insulation to the 1.5 m level shall be protected.

3.2.1.3 Pipes Passing Through Hangers

a. Insulation, whether hot or cold application, shall be continuous through hangers. All horizontal pipes 50 mm and smaller shall be supported on hangers with the addition of a Type 40 protection shield to protect the insulation in accordance with MSS SP-69. Whenever insulation shows signs of being compressed, or when the insulation or jacket shows visible signs of distortion at or near the support shield, insulation inserts as specified below for piping larger than 50 mm shall be installed.

b. Horizontal pipes larger than 50 mm at 16 degrees C and above shall be supported on hangers in accordance with MSS SP-69, and Section 15400 PLUMBING, GENERAL PURPOSE.

c. Horizontal pipes larger than 50 mm below 16 degrees C shall be supported on hangers with the addition of a Type 40 protection shield in accordance with MSS SP-69. An insulation insert of cellular glass or calcium silicate shall be installed above each shield. The insert shall cover not less than the bottom 180 degree arc of the pipe. Inserts shall be the same thickness as the insulation, and shall extend 50 mm on each end beyond the protection shield. When insulation inserts are required per the above, and the insulation thickness is less than 25 mm, wooden or cork dowels or blocks may be installed between the pipe and the shield to prevent the weight of the pipe from crushing the insulation as an option to installing insulation inserts. The insulation jacket shall be continuous over the wooden dowel, wooden block, or insulation insert.

d. Vertical pipes shall be supported with either Type 8 or Type 42 riser clamps with the addition of two Type 40 protection shields in accordance with MSS SP-69 covering the 360 degree arc of the insulation. An insulation insert of cellular glass or calcium silicate shall be installed between each shield and the pipe. The insert shall cover the 360 degree arc of the pipe. Inserts shall be the same thickness as the insulation, and shall extend 50 mm on each end beyond the protection shield. When insulation inserts are required per the above, and the insulation thickness is less than 25 mm, wooden or cork dowels or blocks may be installed between the pipe and the shield to prevent the hanger from crushing the insulation as an option instead of installing insulation inserts.

The insulation jacket shall be continuous over the wooden dowel, wooden block, or insulation insert. The vertical weight of the pipe shall be supported with hangers located in a horizontal section of the pipe. When the pipe riser is longer than 9 m, the weight of the pipe shall be additionally supported with hangers in the vertical run of the pipe which are directly clamped to the pipe, penetrating the pipe insulation. These hangers shall be insulated and the insulation jacket sealed as indicated herein for anchors in a similar service.

e. Inserts shall be covered with a jacket material of the same appearance and quality as the adjoining pipe insulation jacket, shall overlap the adjoining pipe jacket 38 mm, and shall be sealed as required for the pipe jacket. The jacket material used to cover inserts in flexible cellular insulation shall conform to ASTM C 921, Type 1, and is allowed to be of a different material than the adjoining insulation material.

3.2.1.4 Pipes Passing Through Walls

a. For hot water pipes supplying lavatories or other similar heated service which requires insulation, the insulation shall be terminated on the backside of the finished wall. The insulation termination shall be protected with two coats of vapor barrier coating with a minimum total thickness of 2.0 mm applied with glass tape embedded between coats (if applicable). The coating shall extend out onto the insulation 51.0 mm and shall seal the end of the insulation. Glass tape seams shall overlap 25 mm. Caulk the annular space between the pipe and wall penetration. Cover the pipe and wall penetration with a properly sized (well fitting) escutcheon plate. The escutcheon plate shall overlap the wall penetration at least 10 mm.

b. For domestic cold water pipes requiring insulation, the insulation shall be terminated on the finished side of the wall (i.e. insulation must cover the pipe throughout the wall penetration). The insulation shall be protected with two coats of vapor barrier coating with a minimum total thickness of 2.0 mm. The coating shall extend out onto the insulation 51.0 mm and shall seal the end of the insulation. Caulk the annular space between the pipe and wall penetration. Cover the pipe and wall penetration with a properly sized (well fitting) escutcheon plate. The escutcheon plate shall overlap the wall penetration by at least 10 mm.

3.2.1.5 Flexible Cellular Pipe Insulation

Flexible cellular pipe insulation shall be tubular form for pipe sizes 150 mm and less. Type II sheet insulation used on pipes larger than 150 mm shall not be stretched around the pipe. On pipes larger than 300 mm, adhere insulation directly to the pipe on the lower 1/3 of the pipe. Seams shall be staggered when applying multiple layers of insulation. Sweat fittings shall be insulated with miter-cut pieces the same size as on adjacent piping. Screwed fittings shall be insulated with sleeved fitting covers fabricated from miter-cut pieces and shall be overlapped and sealed to the adjacent pipe insulation.

3.2.2 Aboveground Cold Pipelines

The following shall be included for aboveground cold pipelines minus 34 degrees C to plus 16 degrees C:

a. Domestic cold.

b. Make-up water.

c. Chilled water.

d. Air conditioner condensate drains.

3.2.2.1 Insulation Thickness

Insulation thickness for cold pipelines shall be determined using Table I.

Table I - Cold Piping Insulation Thickness
Pipe Size (mm)

Type of Service	Material	Runouts up to 51 mm*	25 mm & less	32 - 51 mm	64 - 102 mm	127 - 152 mm	203 mm & larger
Chilled water supply & return piping	CG	38	38	38	51	51	51
	FC	13	25	25	25	25	25
	PF	13	25	25	25	25	25
Cold domestic water, above and below ceilings	CG	38	38	38	38	38	38
	FC	10	10	10	10	10	10
	PF	10	10	10	10	10	10
Exposed lavatory drains exposed domestic water piping & drains to areas for handicap personnel	FC	13	13	13	13	19	19
	MF	13	25	25	38	38	38
Air conditioning condensate drain located inside building	FC		10	13	13	N/A	N/A
	PF		10	10	10	N/A	N/A

*When runouts to terminal units exceed 3.66 m the entire length of runout shall be insulated like the main feed pipe.

LEGEND:

PF - Phenolic Foam
CG - Cellular Glass
CS - Calcium Silicate
MF - Mineral Fiber
FC - Flexible Cellular

3.2.2.2 Jacket for Fibrous, Cellular Glass, and Phenolic Foam Insulated Pipe

Insulation shall be covered with a factory applied vapor retarder jacket or field applied seal welded PVC jacket. Insulation inside the building shown to be protected with an aluminum jacket shall have the insulation and vapor retarder jacket installed as specified herein. The aluminum jacket shall be installed as specified for piping exposed to weather, except sealing of the laps of the aluminum jacket is not required. In high abuse areas such as janitor closets and traffic areas in equipment rooms, kitchens, and mechanical rooms, aluminum jackets shall be utilized. Pipe insulation to the 1.5 m level will be protected.

3.2.2.3 Insulation for Straight Runs (Fibrous, Cellular Glass and Phenolic Foam)

a. Insulation shall be applied to the pipe with joints tightly butted. The ends of fibrous insulation shall be sealed off with vapor retarder coating at intervals not to exceed 4.5 m.

b. Longitudinal laps of the jacket material shall overlap not less than 38 mm. Butt strips 75 mm wide shall be provided for circumferential joints.

c. Laps and butt strips shall be secured with adhesive and stapled on 100 mm centers if not factory self-sealing.

d. Factory self-sealing lap systems may be used when the ambient temperature is between 4 degrees C and 50 degrees C during installation. The lap system shall be installed in accordance with manufacturer's recommendations. Stapler shall be used only if specifically recommended by the manufacturer. Where gaps occur, the section shall be replaced or the gap repaired by applying adhesive under the lap and then stapling.

e. All Staples, including those used to repair factory self-seal lap systems, shall be coated with a vapor retarder coating. All seams, except those on factory self-seal systems shall be coated with vapor retarder coating.

f. Breaks and punctures in the jacket material shall be patched by wrapping a strip of jacket material around the pipe and securing it with adhesive, stapling, and coating with vapor retarder coating. The patch shall extend not less than 38 mm past the break.

g. At penetrations such as thermometers, the voids in the insulation shall be filled and sealed with vapor retarder coating.

3.2.2.4 Insulation for Fittings and Accessories

a. Pipe insulation shall have ends thoroughly coated with a vapor retarder coating not less than 150 mm from each flange, union, valve, anchor, or fitting in all directions.

b. Precut, preformed insulation for placement over fittings, flanges, unions, valves, anchors, and mechanical couplings shall be used. Precut, preformed insulation shall exhibit the same properties as the adjoining pipe insulation. Where precut/preformed is unavailable, rigid preformed pipe insulation sections may be segmented into the shape required. Insulation of the same thickness and conductivity as the adjoining pipe insulation shall be used. If nesting size insulation is used, the insulation should be overlapped 50 mm or one pipe diameter. Loose fill mineral fiber or insulating cement shall be used to fill the voids. Elbows insulated using segments shall not have less than 3 segments per elbow.

c. Upon completion of installation of insulation on flanges, unions, valves, anchors, fittings and accessories, terminations and insulation not protected by factory vapor retarder jackets or PVC fitting covers shall be protected with two coats of vapor retarder coating with a minimum total thickness of 2.0 mm, applied with glass tape embedded between coats. Tape seams shall overlap 25 mm.The coating shall extend out onto the adjoining pipe insulation 50 mm.

d. Anchors attached directly to the pipe shall be insulated for a sufficient distance to prevent condensation but not less than 150 mm from the insulation surface.

e. Flexible connections at pumps and other equipment shall be insulated with 15 mm flexible cellular insulation, unless otherwise indicated.

f. Insulation shall be marked showing the location of unions, strainers, and check valves.

3.2.2.5 Optional PVC Fitting Covers

At the option of the Contractor, premolded, one or two piece PVC fitting covers may be used in lieu of the vapor retarder and embedded glass tape. Factory premolded insulation segments shall be used under the fitting covers for elbows. Insulation segments shall be the same thickness as adjoining pipe insulation and the insulation shall be protected with one coat of vapor retarder coating under the PVC cover. The covers shall be secured by PVC vapor retarder tape, adhesive, seal-welding or with tacks made for securing PVC covers. Seams in the cover, and tacks and laps to adjoining pipe insulation jacket, shall be sealed with vapor retarder tape to ensure that the assembly has a continuous vapor seal.

3.2.3 Aboveground Hot Pipelines

For hot pipelines above 16 degrees C the following shall be included:

a. Domestic hot water.

b. Hot water heating.

3.2.3.1 Insulation Thickness

Insulation thickness for hot pipelines shall be determined using Table II.

LEGEND:

PF - Phenolic Foam
CG - Cellular Glass
CS - Calcium Silicate
MF - Mineral Fiber
FC - Flexible Cellular

Table II - Hot Piping Insulation Thickness
Pipe Size (mm)

Type of Service (degrees C)	Material	Runouts up to 51 mm	25 mm & less	32 - 51 mm	64 - 102 mm	127 - 152 mm	203 mm & larger
Hot domestic water supply & recirculating system (93.3 C max)	CG	38	38	38	38	38	38
	FC	13	25	25	38	38	38
	PF	13	25	25	25	25	25
	MF	13	25	25	38	38	38
Steam, Steam Condensate, Heating hot water, supply & return (121.1 C max)	CG	38	38	51	51	51	64
	PF	13	25	25	25	25	38
	MF	13	38	38	51	64	76
	CS	25	38	51	64	64	64

*When runouts to terminal units exceed 3.66 m, the entire length of runout shall be insulated like the main feed pipe.

3.2.3.2 Jacket for Insulated Pipe

Insulation shall be covered, in accordance with manufacturer's recommendations, with a factory applied Type II jacket or field applied aluminum where required or seal welded PVC.

3.2.3.3 Insulation for Straight Runs

a. Insulation shall be applied to the pipe with joints tightly butted.

b. Longitudinal laps of the jacket material shall overlap not less than 38 mm, and butt strips 75 mm wide shall be provided for circumferential joints.

c. Laps and butt strips shall be secured with adhesive and stapled on 100 mm centers if not factory self-sealing. Adhesive may be omitted where pipe is concealed.

d. Factory self-sealing lap systems may be used when the ambient temperature is between 4 degrees C and 49 degrees C and shall be installed in accordance with manufacturer's instructions. Laps and butt strips shall be stapled whenever there is nonadhesion of the system. Where gaps occur, the section shall be replaced or the gap repaired by applying adhesive under the lap and then stapling.

e. Breaks and punctures in the jacket material shall be patched by wrapping a strip of jacket material around the pipe and be secured with adhesive and stapled on 100 mm centers if not factory self-sealing. Adhesive may be omitted where pipe is concealed. Patch shall extend not less than 38 mm past the break.

f. Install flexible cellular pipe insulation by slitting tubular sections and applying onto piping or tubing. Alternately, whenever possible, slide unslit sections over the open ends of piping or tubing. All seams and butt joints shall be secured and sealed with adhesive. When using self seal products only the butt joints shall be secured with adhesive. Insulation shall be pushed on the pipe, never pulled. Stretching of insulation may result in open seams and joints. All edges shall be clean cut. Rough or jagged edges of the insulation shall not be permitted. Proper tools such as sharp knives must be used. Type II sheet insulation when used on pipe larger than 150 mm shall not be stretched around the pipe. On pipes larger than 300 mm, adhere sheet insulation directly to the pipe on the lower 1/3 of the pipe.

3.2.3.4 Insulation for Fittings and Accessories

a. The run of the line pipe insulation shall have the ends brought up to the item.

b. Insulation of the same thickness and conductivity as the adjoining pipe insulation, either premolded or segmented, shall be placed around the item abutting the adjoining pipe insulation, or if nesting size insulation is used, overlapping 50 mm or one pipe diameter. Loose fill mineral fiber or insulating cement shall be used to fill the voids. Insulation for elbows less than 80 mm size shall be premolded. Insulation for elbows 80 mm size and larger shall be either premolded or segmented. Elbows insulated using segments shall have not less than 3 segments per elbow. Insulation may be wired or taped on until finish is applied.

c. Upon completion of installation of insulation on flanges, unions, valves, anchors, fittings and accessories, terminations and insulation not protected by factory vapor retarder jackets or PVC fitting covers shall be protected with two coats of Class 1 adhesive applied with glass tape embedded between coats. Tape seams shall overlap 25 mm. Adhesive shall extend onto the adjoining insulation not less than 50 mm. The total dry film thickness shall be not less than 2.0 mm.

d. Insulation terminations shall be tapered to unions at a 45-degree angle.

e. At the option of the Contractor, factory premolded one- or two-piece PVC fitting covers may be used in lieu of the adhesive and embedded glass tape. Factory premolded segments or factory or field cut blanket insert insulation segments shall be used under the cover and shall be the same thickness as adjoining pipe insulation. The covers shall be secured by PVC vapor retarder tape, adhesive, seal-welding or with tacks made for securing PVC covers.

3.2.4 Piping Exposed to Weather

Piping exposed to weather shall be insulated and jacketed as specified for the applicable service inside the building. After this procedure, an aluminum jacket shall be applied.

3.2.4.1 Aluminum Jacket

The jacket for hot piping may be factory applied. The jacket shall overlap not less than 50 mm at longitudinal and circumferential joints and shall be secured with bands at not more than 300 mm centers. Longitudinal joints shall be overlapped down to shed water and located at 4 or 8 o'clock positions. Joints on piping 16 degrees C and below shall be sealed with caulking while overlapping to prevent moisture penetration. Where jacketing on piping 16 degrees C and below abuts an uninsulated surface, joints shall be caulked to prevent moisture penetration. Joints on piping above 16 degrees C shall be sealed with a moisture retarder.

3.2.4.2 Insulation for Fittings

Flanges, unions, valves, fittings, and accessories shall be insulated and finished as specified for the applicable service. Two coats of an emulsion type weatherproof mastic recommended by the insulation manufacturer shall be applied with glass tape embedded between coats. Tape overlaps shall be not less than 25 mm and the adjoining aluminum jacket not less than 50 mm. Factory preformed aluminum jackets may be used in lieu of the above. Molded PVC fitting covers shall be used with PVC lagging and adhesive welded moisture tight.

3.2.4.3 PVC Lagging

PVC lagging shall be ultraviolet resistant and adhesive welded vapor tight with manufacturer's recommended adhesive. Installation shall include provision for thermal expansion.

3.3 DUCT INSULATION INSTALLATION

Except for oven hood exhaust duct insulation, corner angles shall be installed on external corners of insulation on ductwork in exposed finished spaces before covering with jacket.

3.3.1 Duct Insulation Thickness

Duct insulation thickness shall be in accordance with Table III.

Table III - Minimum Duct Insulation (mm)

Cold Air Ducts	50
Relief Ducts	38
Fresh Air Intake Ducts	38
Warm Air Ducts	50
Relief Ducts	38
Fresh Air Intake Ducts	38

3.3.2 Insulation and Vapor Retarder for Cold Air Duct

Insulation and vapor retarder for cold air duct below 16 degrees C: Ducts and associated equipment shall be insulated to a thickness which is in accordance with Table III. The following shall be insulated:

a. Supply ducts.

b. Return air ducts.

c. Relief ducts.

d. Flexible runouts (field-insulated).

e. Plenums.

f. Duct-mounted coil casings.

g. Coil headers and return bends.

h. Coil casings.

i. Fresh air intake ducts.

j. Filter boxes.

k. Mixing boxes (field-insulated).

l. Supply fans (field-insulated).

m. Combustion air intake ducts.

Insulation for rectangular ducts shall be flexible type where concealed, minimum density 12 kg per cubic meter and rigid type where exposed, minimum density 48 kg per cubic meter. Insulation for round/oval ducts shall be flexible type, minimum density 12 kg per cubic meter with a factory Type I jacket; or, a semi rigid board, minimum density 48 kg per cubic meter, formed or fabricated to a tight fit, edges beveled and joints tightly butted and staggered, with a factory applied Type I all service jacket. Insulation for exposed ducts shall be provided with either a white, paintable, factory-applied Type I jacket or a vapor retarder jacket coating finish as specified. Fibrous and cellular glass insulation on concealed duct shall be provided with a factory-applied Type I vapor retarder jacket. The total dry film thickness shall be approximately 2.0 mm. Duct insulation shall be continuous through sleeves and prepared openings except fire wall penetrations. Duct insulation terminating at fire dampers, shall be

continuous over the damper collar and retaining angle of fire dampers, which are exposed to unconditioned air and which may be prone to condensate formation. Duct insulation and vapor retarder shall cover the collar, neck, and any uninsulated surfaces of diffusers, registers and grills. Vapor retarder materials shall be applied to form a complete unbroken vapor seal over the insulation.

3.3.2.1 Installation on Concealed Duct

a. For rectangular, oval or round ducts, insulation shall be attached by applying Class 2 adhesive around the entire perimeter of the duct in 150 mm wide strips on 300 mm centers.

b. For rectangular and oval ducts, 600 mm and larger insulation shall be additionally secured to bottom of ducts by the use of mechanical fasteners. Fasteners shall be spaced on 450 mm centers and not more than 450 mm from duct corners.

c. For rectangular, oval and round ducts, mechanical fasteners shall be provided on sides of duct risers for all duct sizes. Fasteners shall be spaced on 450 mm centers and not more than 450 mm from duct corners.

d. Insulation shall be impaled on the mechanical fasteners where used and shall be pressed thoroughly into the adhesive. Care shall be taken to ensure vapor retarder jacket joints overlap 50 mm. The insulation shall not be compressed to a thickness less than that specified. Insulation shall be carried over standing seams and trapeze-type duct hangers.

e. Self-locking washers shall be installed where mechanical fasteners are used. The pin shall be trimmed back and bent over.

f. Jacket overlaps shall be secured under the overlap with Class 2 adhesive and stapled on 100 mm centers. Staples and seams shall be coated with a brush coat of vapor retarder coating.

g. Breaks in the jacket material shall be covered with patches of the same material as the vapor retarder. The patches shall extend not less than 50 mm beyond the break or penetration in all directions and shall be secured with Class 2 adhesive and staples. Staples and joints shall be sealed with a brush coat of vapor retarder coating.

h. At jacket penetrations such as hangers thermometers and damper operating rods, voids in the insulation shall be filled and the penetration sealed with a brush coat of vapor retarder coating.

i. Insulation terminations and pin punctures shall be sealed and flashed with a reinforced vapor retarder coating finish. The coating shall overlap the adjoining insulation and uninsulated surface 50 mm. Pin puncture coatings shall extend 50 mm from the puncture in all directions.

j. Where insulation standoff brackets occur, insulation shall be extended under the bracket and the jacket terminated at the bracket.

3.3.2.2 Installation on Exposed Duct Work

a. For rectangular ducts, rigid insulation shall be secured to the duct by mechanical fasteners on all four sides of the duct, spaced not more than 300 mm apart and not more than 75 mm from the edges of the insulation joints. A minimum of two rows of fasteners shall be provided for each side of duct 300 mm and larger. One row shall be provided for each side of duct less than 300 mm.

b. Duct insulation shall be formed with minimum jacket seams. Each piece of rigid insulation shall be fastened to the duct using mechanical fasteners. When the height of projections is less than the insulation thickness, insulation shall be brought up to standing seams, reinforcing, and other vertical projections and shall not be carried over. Vapor retarder jacket shall be continuous across seams, reinforcing, and projections. When height of projections is greater than the insulation thickness, insulation and jacket shall be carried over.

c. Insulation shall be impaled on the fasteners; self-locking washers shall be installed and the pin trimmed and bent over.

d. Joints in the insulation jacket shall be sealed with a 100 mm wide strip of the same material as the vapor retarder jacket. The strip shall be secured with Class 2 adhesive and stapled. Staples and seams shall be sealed with a brush coat of vapor retarder coating.

e. Breaks and ribs or standing seam penetrations in the jacket material shall be covered with a patch of the same material as the jacket. Patches shall extend not less than 50 mm beyond the break or penetration and shall be secured with Class 2 adhesive and stapled. Staples and joints shall be sealed with a brush coat of vapor retarder coating.

f. At jacket penetrations such as hangers, thermometers, and damper operating rods, the voids in the insulation shall be filled and the penetrations sealed with a brush coat of vapor retarder coating.

g. Insulation terminations and pin punctures shall be sealed and flashed with a reinforced vapor retarder coating finish. The coating shall overlap the adjoining insulation and uninsulated surface 50 mm. Pin puncture coatings shall extend 50 mm from the puncture in all directions.

h. Oval and round ducts, flexible type, shall be insulated with factory Type I jacket insulation with minimum density of 12 kg per cubic meter attached by applying Class 2 adhesive around the entire perimeter of the duct in 150 mm wide stripe on 300 mm centers.

3.3.3 Insulation for Warm Air Duct

For warm air ducts above 16 degrees C, ducts and associated equipment shall be insulated to a thickness which is in accordance with Table III. The following shall be insulated:

a. Supply ducts.

b. Return air ducts.

c. Relief air ducts.

d. Flexible runouts (field insulated).

e. Plenums.

f. Duct-mounted coil casings.

g. Coil-headers and return bends.

h. Coil casings.

i. Fresh air intake ducts.

j. Filter boxes.

k. Mixing boxes.

l. Supply fans.

m. Ducts exposed to weather.

Insulation for rectangular ducts shall be flexible type where concealed, minimum density 12 kg per cubic meter; and rigid type where exposed, minimum density 48 kg per cubic meter. Insulation on exposed ducts shall be provided with a white, paintable, factory-applied Type II jacket, or finished with Class 1 adhesive finish. Flexible type insulation shall be used for round ducts, minimum density 12 kg per cubic meter with a factory-applied Type II jacket. Insulation on concealed duct shall be provided with a factory-applied Type II jacket. Class 1 adhesive finish where indicated to be used shall be accomplished by applying two coats of Class 1 adhesive with a layer of glass cloth embedded between the coats. The total dry film thickness shall be approximately 2.0 mm. Duct insulation shall be continuous through sleeves and prepared openings. Duct insulation shall terminate at fire dampers and flexible connections.

3.3.3.1 Installation on Concealed Duct

a. For rectangular, oval and round ducts, insulation shall be attached by applying Class 2 adhesive around the entire perimeter of the duct in 150 mm wide strips on 300 mm centers.

b. For rectangular and oval ducts 600 mm and larger, insulation shall be secured to the bottom of ducts by the use of mechanical fasteners. Fasteners shall be spaced on 450 mm centers and not more than 450 mm from duct corner.

c. For rectangular, oval and round ducts, mechanical fasteners shall be provided on sides of duct risers for all duct sizes. Fasteners shall be spaced on 450 mm centers and not more than 450 mm from duct corners.

d. The insulation shall be impaled on the mechanical fasteners where used and shall be pressed thoroughly into the adhesive. The

insulation shall not be compressed to a thickness less than that specified. Insulation shall be carried over standing seams and trapeze-type hangers.

e. Self-locking washers shall be installed where mechanical fasteners are used and the pin trimmed and bent over.

f. Insulation jacket shall overlap not less than 50 mm at joints and the lap shall be secured with Class 2 adhesive under the lap and stapled on 100 mm centers.

3.3.3.2 Installation on Exposed Duct

a. For rectangular ducts, the rigid insulation shall be secured to the duct by the use of mechanical fasteners on all four sides of the duct, spaced not more than 300 mm apart and not more than 75 mmfrom the edges of the insulation joints. A minimum of two rows of fasteners shall be provided for each side of duct 300 mm and larger and a minimum of one row for each side of duct less than 300 mm.

b. Duct insulation with factory-applied jacket shall be formed with minimum jacket seams, and each piece of rigid insulation shall be fastened to the duct using mechanical fasteners. When the height of projection is less than the insulation thickness, insulation shall be brought up to standing seams, reinforcing, and other vertical projections and shall not be carried over the projection. Jacket shall be continuous across seams, reinforcing, and projections. Where the height of projections is greater than the insulation thickness, insulation and jacket shall be carried over the projection.

c. Insulation shall be impaled on the fasteners; self-locking washers shall be installed and pin excess clipped and bent over.

d. Joints on jacketed insulation shall be sealed with a 100 mm wide strip of the same material as the jacket. The strip shall be secured with Class 2 adhesive and stapled.

e. Breaks and penetrations in the jacket material shall be covered with a patch of the same material as the jacket. Patches shall extend not less than 50 mm beyond the break or penetration and shall be secured with Class 2 adhesive and stapled.

f. Insulation terminations and pin punctures shall be sealed and flashed with a Class 1 adhesive. Two coats of Class 1 adhesive coating shall be applied with glass cloth embedded between coats. The total coating shall have a dry film thickness of approximately 2.0 mm and shall overlap the adjoining insulation and uninsulated surface 50 mm.

g. Oval and round ducts, flexible type, shall be insulated with factory Type I jacket insulation, minimum density of 12 kg per cubic meter attached by applying Class 2 adhesive around the entire perimeter of the duct in 150 mm wide stripe on 300 mm center. Joints shall be sealed with a 100 mm wide strip of the same material as the jacket. The strip shall be secured with Class 2 adhesive and stapled.

3.3.4 Ducts Handling Air for Dual Purpose

For air handling ducts for dual purpose below and above 16 degrees C, ducts shall be insulated as specified for cold air duct.

3.3.5 Insulation for Evaporative Cooling Duct

Evaporative cooling supply duct located in spaces not evaporatively cooled, shall be insulated. Material and installation requirements shall be as specified for duct insulation for warm air duct.

3.3.6 Duct Test Holes

After duct systems have been tested, adjusted, and balanced, breaks in the insulation and jacket shall be repaired in accordance with the applicable section of this specification for the type of duct insulation to be repaired.

3.4 EQUIPMENT INSULATION INSTALLATION

3.4.1 General

Removable insulation sections shall be provided to cover parts of equipment which must be opened periodically for maintenance including vessel covers, fasteners, flanges and accessories. Equipment insulation shall be omitted on the following:

a. Handholes.

b. Boiler manholes.

c. Cleanouts.

d. ASME stamps.

e. Manufacturer's nameplates.

3.4.2 Insulation for Cold Equipment

Cold equipment below 16 degrees C: Insulation shall be furnished on equipment handling media below 16 degrees C including the following:

a. Pumps.

b. Refrigeration equipment parts that are not factory insulated.

c. Drip pans under chilled equipment.

d. Chilled water pumps.

e. Air handling equipment parts that are not factory insulated.

f. Expansion and air separation tanks.

3.4.2.1 Insulation Type

Insulation shall be suitable for the temperature encountered. Thicknesses shall be as follows:

a. Equipment Handling Media Between 2 and 16 degrees C: 50 mm thick cellular glass, 38 mm thick flexible cellular, or 25 mm thick phenolic foam.

b. Equipment Handling Media Between minus 18 degrees C and plus 1 degrees C: 90 mm thick cellular glass, 63.5 mm flexible cellular, or 38 mm thick phenolic foam.

c. Equipment Handling Media Between minus 34 degrees C and minus 18 degrees C: 100 mm thick cellular glass 75 mm (3 inch) thick flexible cellular, or 38 mm thick phenolic foam.

3.4.2.2 Pump Insulation

a. Pumps shall be insulated by forming a box around the pump housing. The box shall be constructed by forming the bottom and sides using joints which do not leave raw ends of insulation exposed. Joints between sides and between sides and bottom shall be joined by adhesive with lap strips for rigid mineral fiber and contact adhesive for flexible cellular insulation. The box shall conform to the requirements of MICA-01 plate No. 49 when using flexible cellular insulation. Joints between top cover and sides shall fit tightly forming a female shiplap joint on the side pieces and a male joint on the top cover, thus making the top cover removable.

b. Exposed insulation corners shall be protected with corner angles.

c. Upon completion of installation of the insulation, including removable sections, two coats of vapor retarder coating shall be applied with a layer of glass cloth embedded between the coats. The total dry thickness of the finish shall be 2.0 mm. A parting line shall be provided between the box and the removable sections allowing the removable sections to be removed without disturbing the insulation coating. Caulking shall be applied to parting line, between equipment and removable section insulation, and at all penetrations.

3.4.2.3 Other Equipment

a. Insulation shall be formed or fabricated to fit the equipment. To ensure a tight fit on round equipment, edges shall be beveled and joints shall be tightly butted and staggered.

b. Insulation shall be secured in place with bands or wires at intervals as recommended by the manufacturer but not more than 300 mm centers except flexible cellular which shall be adhered. Insulation corners shall be protected under wires and bands with suitable corner angles.

c. Cellular glass and phenolic foam insulation shall be set in a coating of bedding compound, and joints shall be sealed with

bedding compound as recommended by the manufacturer. Mineral fiber insulation joints shall be filled with finishing cement.

d. Insulation on heads of heat exchangers shall be removable. Removable section joints shall be fabricated using a male-female shiplap type joint. The entire surface of the removable section shall be finished by applying two coats of vapor retarder coating with a layer of glass cloth embedded between the coats. The total dry thickness of the finish shall be 2.0 mm.

e. Exposed insulation corners shall be protected with corner angles.

f. Insulation on equipment with ribs shall be applied over 150 x 150 mm by 12 gauge welded wire fabric which has been cinched in place, or if approved by the Contracting Officer, spot welded to the equipment over the ribs. Insulation shall be secured to the fabric with J-hooks and 50 x 50 mm washers or shall be securely banded or wired in place on 300 mm centers.

3.4.2.4 Vapor Retarder

Upon completion of installation of insulation, penetrations shall be caulked. Two coats of vapor retarder coating shall be applied over insulation, including removable sections, with a layer of glass cloth embedded between the coats. The total dry thickness of the finish shall be 2.0 mm. Caulking shall be applied to parting line between equipment and removable section insulation.

3.4.3 Insulation for Hot Equipment

Hot equipment above 16 degrees C: Insulation shall be furnished on equipment handling media above 16 degrees C including the following:

a. Pumps handling media above 54 degrees C.

b. Air separation tanks.

c. Unjacketed boilers or parts of boilers.

d. Boiler flue gas connection from boiler to stack (if inside).

3.4.3.1 Insulation

Insulation shall be suitable for the temperature encountered. Shell and tube-type heat exchangers shall be insulated for the temperature of the shell medium. Insulation thicknesses shall be as follows:

a. Equipment handling steam to 103.4 kPa or other media to 121 degrees C: 50 mm thick rigid mineral fiber, 50 mm thick flexible mineral fiber, 50 mm thick calcium silicate, 38 mm cellular glass, 38 mm thick phenolic foam, to 93.3 degrees C 25 mm Flexible Cellular.

b. Equipment handling steam to 1379.0 kPa or other media to 204 degrees C: 75 mm thick rigid mineral fiber, 75 mm thick flexible mineral fiber, 75 mm thick calcium silicate, 75 mm thick cellular glass.

c. Equipment handling media to 316 degrees C: 127 mm thick rigid mineral fiber, 150 mm thick flexible mineral fiber, 150 mm thick calcium silicate, 150 mm thick cellular glass.

d. Equipment handling media above 316 degrees C: Insulate with a thickness of material required to limit the external temperature of the insulation to 50 degrees C except that diesel engine exhaust piping and mufflers shall be covered with 150 mm thick material suitable for 650 degrees C service. Heat transfer calculations shall be submitted to substantiate insulation and thickness selection.

3.4.3.2 Insulation of Pumps

Pumps shall be insulated by forming a box around the pump housing. The box shall be constructed by forming the bottom and sides using joints which do not leave raw ends of insulation exposed. Bottom and sides shall be banded to form a rigid housing which does not rest on the pump. Joints between top cover and sides shall fit tightly. The top cover shall have a joint forming a female shiplap joint on the side pieces and a male joint on the top cover, thus making the top cover removable. Two coats of Class I adhesive shall be applied over insulation, including removable sections, with a layer of glass cloth embedded between the coats. A parting line shall be provided between the box and the removable sections allowing the removable sections to be removed without disturbing the insulation coating. The total dry thickness of the finish shall be 2.0 mm.Caulking shall be applied to parting line of the removable sections and penetrations.

3.4.3.3 Other Equipment

a. Insulation shall be formed or fabricated to fit the equipment. To ensure a tight fit on round equipment, edges shall be beveled and joints shall be tightly butted and staggered.

b. Insulation shall be secured in place with bands or wires at intervals as recommended by the manufacturer but not greater than 300 mm centers except flexible cellular which shall be adhered. Insulation corners shall be protected under wires and bands with suitable corner angles.

c. On high vibration equipment, cellular glass insulation shall be set in a coating of bedding compound as recommended by the manufacturer, and joints shall be sealed with bedding compound. Mineral fiber joints shall be filled with finishing cement.

d. Insulation on heads of heat exchangers shall be removable. The removable section joint shall be fabricated using a male-female shiplap type joint. Entire surface of the removable section shall be finished as specified.

e. Exposed insulation corners shall be protected with corner angles.

f. On equipment with ribs such as boiler flue gas connection, draft fans, and fly ash or soot collectors, insulation shall be applied over 150 x 150 mm by 12 gauge welded wire fabric which has been cinched in place, or if approved by the Contracting Officer, spot welded to the equipment over the ribs. Insulation shall be secured

to the fabric with J-hooks and 50 x 50 mm washers or shall be securely banded or wired in place on 300 mm (maximum) centers.

g. On equipment handling media above 316 degrees C, insulation shall be applied in two or more layers with joints staggered.

h. Upon completion of installation of insulation, penetrations shall be caulked. Two coats of Class I adhesive shall be applied over insulation, including removable sections, with a layer of glass cloth embedded between the coats. The total dry thickness of the finish shall be 2.0 mm. Caulking shall be applied to parting line between equipment and removable section insulation.

3.4.4 Equipment Handling Dual Temperature Media

Below and above 16 degrees C: Equipment handling dual temperature media shall be insulated as specified for cold equipment.

3.4.5 Equipment Exposed to Weather

3.4.5.1 Installation

Equipment exposed to weather shall be insulated and finished in accordance with the requirements for ducts exposed to weather in paragraph DUCT INSULATION INSTALLATION.

3.4.5.2 Optional Panels

At the option of the Contractor, prefabricated metal insulation panels may be used in lieu of the insulation and finish previously specified. Thermal performance shall be equal to or better than that specified for field applied insulation. Panels shall be the standard catalog product of a manufacturer of metal insulation panels. Fastenings, flashing, and support system shall conform to published recommendations of the manufacturer for weatherproof installation that shall prevent moisture from entering the insulation. Panels shall be designed to accommodate thermal expansion and to support a 1112 N walking load without permanent deformation or permanent damage to the insulation. Exterior metal cover sheet shall be aluminum and exposed fastenings shall be stainless steel or aluminum.

End of Section

SECTION 15330

WET PIPE SPRINKLER SYSTEM, FIRE PROTECTION

PART 1 GENERAL

1.1 REFERENCES

The publications listed below form a part of this specification to the extent referenced. The publications are referred to in the text by basic designation only.

AMERICAN SOCIETY FOR TESTING AND MATERIALS (ASTM)

ASTM A 47	(1990) Ferritic Malleable Iron Castings
ASTM A 53	(1995a) Pipe, Steel, Black and Hot-Dipped, Zinc-Coated Welded and Seamless
ASTM A 135	(1993) Electric-Resistance-Welded Steel Pipe
ASTM A 183	(1983; R 1990) Carbon Steel Tract Bolts and Nuts
ASTM A 536	(1984; R 1993) Ductile Iron Castings
ASTM A 795	(1995) Black and Hot-Dipped Zinc-Coated (Galvanized) Welded and Seamless Steel Pipe for Fire Protection Use

AMERICAN SOCIETY OF MECHANICAL ENGINEERS (ASME)

ASME B16.1	(1989) Cast Iron Pipe Flanges and Flanged Fittings
ASME B16.3	(1992) Malleable Iron Threaded Fittings
ASME B16.4	(1992) Cast Iron Threaded Fittings
ASME B16.9	(1993) Factory-Made Wrought Steel Buttwelding Fittings
ASME B16.11	(1991) Forged Fittings, Socket-Welding and Threaded
ASME B16.21	(1992) Nonmetallic Flat Gaskets for Pipe Flanges
ASME B18.2.1	(1981; Supple 1991; R 1992) Square and Hex Bolts and Screws (Inch Series)

ASME B18.2.2	(1987; R 1993) Square and Hex Nuts (Inch Series)

AMERICAN SOCIETY OF SANITARY ENGINEERING (ASSE)

ASSE 1015	(1993) Reduced Pressure Principle Backflow Prevention Assembly

AMERICAN WATER WORKS ASSOCIATION (AWWA)

AWWA C104	(1990) Cement-Mortar Lining for Ductile-Iron Pipe and Fittings for Water
AWWA C110	(1993) Ductile-Iron and Gray-Iron Fittings, 3 In. Through 48 In. (75 mm through 1200 mm), for Water and Other Liquids
AWWA C111	(1990) Rubber-Gasket Joints for Ductile-Iron Pressure Pipe and Fittings
AWWA C151	(1991) Ductile-Iron Pipe, Centrifugally Cast, for Water or Other Liquids

FACTORY MUTUAL ENGINEERING AND RESEARCH (FM)

FM P7825	(1998; Supple I; Supple II; Supple III) Approval Guide

MANUFACTURERS STANDARDIZATION SOCIETY OF THE VALVE AND FITTINGS INDUSTRY (MSS)

MSS SP-71	(1990) Cast Iron Swing Check Valves, Flanges and Threaded Ends

NATIONAL FIRE PROTECTION ASSOCIATION (NFPA)

NFPA 13	(1996) Installation of Sprinkler Systems
NFPA 24	(1995) Installation of Private Fire Service Mains and Their Appurtenances

NATIONAL INSTITUTE FOR CERTIFICATION IN ENGINEERING TECHNOLOGIES (NICET)

NICET 1014	(1995) Program Detail Manual for Certification in the Field of Fire Protection Engineering Technology (Field Code 003) Automatic Sprinkler System Layout

UNDERWRITERS LABORATORIES (UL)

UL-01	(1998) Building Materials Directory

UL-04 (1998; Supple) Fire Protection Equipment Directory

1.2 GENERAL REQUIREMENTS

Wet pipe sprinkler system shall be provided in all areas of the building except those areas protected by a preaction system, as indicated on the drawings. The sprinkler system shall provide fire sprinkler protection for the entire area. Except as modified herein, the system shall be designed and installed in accordance with NFPA 13. Pipe sizes which are not indicated on drawings shall be determined by hydraulic calculation.

1.2.1 Hydraulic Design

The system shall be hydraulically designed to discharge the densities shown on the drawings over the hydraulically most demanding 279 square meters of floor area. Hydraulic calculations shall be in accordance with the Area/Density Method of NFPA 13.

1.2.1.1 Hose Demand

An allowance for exterior hose streams of 1893 L/min shall be added to the sprinkler system demand at the fire hydrant shown on the drawings closest to the point where the water service enters the building

1.2.1.2 Basis for Calculations

The design of the system shall be based upon a water supply data as shown on the drawings. Water supply shall be presumed available at the point of connection to existing. Hydraulic calculations shall be based upon the Hazen-Williams formula with a "C" value of 120 for steel piping, , 140 for new cement-lined ductile-iron piping, and.

1.2.2 Sprinkler Spacing

Sprinklers shall be uniformly spaced on branch lines. Maximum spacing per sprinkler shall not exceed limits specified in NFPA 13 for the occupancies as shown on the drawings. The exception to NFPA 13, Section 4-6.3.2, commonly known as “the small room rule,” shall not apply.

1.3 SUBMITTALS

Government approval is required for submittals with a "GA" designation; submittals having an "FIO" designation are for information only. Submittals related to system configuration, hydraulic calculations, and equipment selection, including manufacturer's catalog data, working drawings, connection drawings, control diagrams and certificates shall be submitted concurrently as a complete package. The package will be reviewed by the U.S. Army Engineer District Fire Protection Engineer. The following shall be submitted in accordance with Section 01300 SUBMITTAL PROCEDURES:

SD-01 Data

Load Calculations for Sizing Sway Bracing; GA.

For systems that are required to be protected against damage from earthquakes, load calculations shall be provided for sizing of sway bracing.

Sprinkler System Equipment; GA.

Manufacturer's Catalog Data for each separate piece of equipment proposed for use in the system. Data shall indicate the name of the manufacturer of each item of equipment, with data highlighted to indicate model, size, options, etc. proposed for installation. In addition, a complete equipment list which includes equipment description, model number and quantity shall be provided.

Hydraulic Calculations; GA.

Hydraulic calculations, including a drawing showing hydraulic reference points.

Spare Parts; FIO.

Spare parts data shall be included for each different item of material and equipment specified. The data shall include a complete list of parts and supplies, with current unit prices and source of supply, and a list of parts recommended by the manufacturer to be replaced after 1 year and 3 years of service. A list of special tools and test equipment required for maintenance and testing of the products supplied by the Contractor shall be included.

SD-04 Drawings

Sprinkler System Shop Drawings; GA.

Detail drawings conforming to the requirements established for working plans as prescribed in NFPA 13. Drawings shall include plan and elevation views which establish that the equipment will fit the allotted spaces with clearance for installation and maintenance. Each set of drawings shall include the following:

a. Descriptive index of drawings in the submittal with drawings listed in sequence by drawing number. A legend identifying device symbols, nomenclature, and conventions used.

b. Floor plans drawn to a scale not less than 1/8" = 1'-0" which clearly show locations of sprinklers, risers, pipe hangers, seismic separation assemblies, sway bracing, inspector's test connections, drains, and other applicable details necessary to clearly describe the proposed arrangement. Each type of fitting used and the locations of bushings, reducing couplings, and welded joints shall be indicated.

c. Actual center-to-center dimensions between sprinklers on branch lines and between branch lines; from end sprinklers to adjacent walls; from walls to branch lines; from sprinkler feed mains, cross-mains and branch lines to finished floor and roof or ceiling. A detail shall show the dimension from the sprinkler and sprinkler deflector to the ceiling in finished areas.

d. Longitudinal and transverse building sections showing typical branch line and cross-main pipe routing as well as elevation of each typical sprinkler above finished floor.

e. Details of each type of riser assembly; pipe hanger; sway bracing for earthquake protection, and restraint of underground water main at point-of-entry into the building, and electrical devices and interconnecting wiring.

As-Built Drawings; FIO.

As-built drawings, no later than 14 working days after completion of the Final Tests. The sprinkler system shop drawings shall be updated to reflect as-built conditions after work is completed and shall be on reproducible full-size mylar film.

SD-06 Instructions

Test Procedures; GA.

Proposed test procedures for piping hydrostatic test, testing of alarms, at least 14 days prior to the start of related testing.

SD-07 Schedules

Preliminary Tests; GA.

A schedule of preliminary tests, at least 14 days prior to the proposed start of the tests.

Final Test; GA.

Upon successful completion of tests specified under PRELIMINARY TESTS, written notification shall be given to the Contracting Officer of the date for the final acceptance test. Notification shall be provided at least 14 days prior to the proposed start of the test. Notification shall include a copy of the Contractor's Material & Test Certificates.

SD-08 Statements

Installer Qualifications; GA.

Qualifications of the sprinkler installer.

Submittal Preparer's Qualifications; GA.

The name and documentation of certification of the individual who will prepare the submittals, prior to the submittal of the drawings and hydraulic calculations.

SD-13 Certificates

Contractor's Material & Test Certificates; GA.

Certificates, as specified in NFPA 13, shall be completed and signed by the Contractor's Representative performing required tests for both underground and aboveground piping.

SD-19 Operation and Maintenance Manuals

Sprinkler System; GA.

Manuals shall be in loose-leaf binder format and grouped by technical sections consisting of manufacturer's standard brochures, schematics, printed instructions, general operating procedures, and safety precautions. The manuals shall list routine maintenance procedures possible breakdowns, and repairs, and troubleshooting guide. This shall include procedures and instructions pertaining to frequency of preventive maintenance, inspection, adjustment, lubrication and cleaning necessary to minimize corrective maintenance and repair.

1.4 HYDRAULIC CALCULATIONS

Hydraulic calculations shall be as outlined in NFPA 13 except that calculations shall be performed by computer using software specifically designed for fire protection system design. Software which uses k-factors for typical branch lines is not acceptable. Calculations shall be taken back to the water supply source unless water supply data is otherwise indicated. Calculations shall substantiate that the design area indicated is the hydraulically most demanding. Water supply curves and system requirements shall be plotted on semi-logarithmic graph paper so as to present a summary of the complete hydraulic calculation. A summary sheet listing sprinklers in the design area and their respective hydraulic reference points, elevations, actual discharge pressures and actual flows shall be provided. Elevations of hydraulic reference points (nodes) shall be indicated. Documentation shall identify each pipe individually and the nodes connected thereto. The diameter, length, flow, velocity, friction loss, number and type fittings, total friction loss in the pipe, equivalent pipe length and Hazen-Williams coefficient shall be indicated for each pipe. For gridded systems, calculations shall show peaking of demand area friction loss to verify that the hydraulically most demanding area is being used. A drawing showing hydraulic reference points (nodes) used in the calculations shall be included on the shop drawings.

1.5 SUBMITTAL PREPARER'S QUALIFICATIONS

The sprinkler system submittals, including as-built drawings, shall be prepared by an individual who is either a registered professional engineer or who is certified as a Level IIITechnician by National Institute for Certification in Engineering Technologies (NICET) in the Automatic Sprinkler System Layout subfield of Fire Protection Engineering Technology in accordance with NICET 1014.

1.6 INSTALLER QUALIFICATIONS

The installer shall be experienced and regularly engaged in the installation of the type and complexity of system included in this project. A statement prior to submittal of any other data or drawings, that the proposed sprinkler system installer is regularly engaged in the installation of the type and complexity of system included in this project shall be provided. In addition, data identifying the location of at least three systems recently installed by the proposed installer which are comparable to the system specified shall be submitted. Contractor shall certify that each

system has performed satisfactorily, in the manner intended, for a period of not less than 6 months.

1.7 REGULATORY REQUIREMENTS

Compliance with referenced NFPA standards is mandatory. This includes advisory provisions listed in the appendices of such standards, as though the word "shall" had been substituted for the word "should" wherever it appears. Applicable material and installation standards referenced in Appendix A of NFPA 13 and NFPA 24 shall be considered mandatory the same as if such referenced standards were specifically listed in this specification. In the event of a conflict between specific provisions of this specification and applicable NFPA standards, this specification shall govern. All requirements that exceed the minimum requirements of NFPA 13 shall be incorporated into the design. Reference to "authority having jurisdiction" shall be interpreted to mean the Contracting Officer.

1.8 DELIVERY AND STORAGE

Equipment placed in storage shall be stored with protection from the weather, humidity and temperature variations, dirt and dust or other contaminants.

PART 2 PRODUCTS

2.1 GENERAL EQUIPMENT REQUIREMENTS

2.1.1 Standard Products

Materials and equipment shall be standard products of a manufacturer regularly engaged in the manufacture of such products and shall essentially duplicate items that have been in satisfactory use for at least 2 years prior to bid opening.

2.1.2 Requirements for Fire Protection Service

Equipment and materials shall have been tested by Underwriters Laboratories, Inc. and listed in UL-04 or approved by Factory Mutual and listed in FM P7825. Where the terms "listed" or "approved" appear in this specification, such shall mean listed in UL-04 or FM P7825.

2.1.3 Nameplates

Major components of equipment shall have the manufacturer's name, address, type or style, model or serial number, and catalog number on a plate permanently affixed to the item of equipment.

2.2 UNDERGROUND PIPING SYSTEMS

2.2.1 Pipe

Piping from a point 150 mm (6 inches) above the floor to a point 1500 mm (5 feet) outside the building wall shall be ductile iron with a rated working pressure of 1034 KPa (150 psi) conforming to AWWA C151, with cement mortar lining conforming to AWWA C104. Piping more than 5 feet outside the building walls shall comply with Section 02660 WATER LINES.

2.2.2 Fittings and Gaskets

Fittings shall be ductile iron conforming to AWWA C110. Gaskets shall be suitable in design and size for the pipe with which such gaskets are to be used. Gaskets for ductile iron pipe joints shall conform to AWWA C111.

2.3 ABOVEGROUND PIPING SYSTEMS

Aboveground piping shall be steel

2.3.1 Steel Piping System

2.3.1.1 Steel Pipe

Except as modified herein, steel pipe shall be black and shall conform to applicable provisions of ASTM A 795, ASTM A 53, or ASTM A 135. Pipe in which threads or grooves are cut shall be Schedule 40 Pipe shall be marked with the name of the manufacturer, kind of pipe, and ASTM designation. Pipe sizes 2-inch and smaller shall be Schedule 40 with threaded fittings. Pipe sizes 2-1/2-inch and larger shall be either Schedule 40 or Schedule 10.

2.3.1.2 Fittings for Non-Grooved Steel Pipe

Fittings shall be cast iron conforming to ASME B16.4, steel conforming to ASME B16.9 or ASME B16.11, or malleable iron conforming to ASME B16.3. Fittings into which sprinklers, drop nipples or riser nipples (sprigs) are screwed shall be threaded type. Plain-end fittings with mechanical couplings, fittings which use steel gripping devices to bite into the pipe and segmented welded fittings shall not be used.

2.3.1.3 Grooved Mechanical Joints and Fittings

Joints and fittings shall be designed for not less than 1200 Kpa (175 psi) service and shall be the product of the same manufacturer. Fitting and coupling houses shall be malleable iron conforming to ASTM A 47, Grade 32510; ductile iron conforming to ASTM A 536, Grade 65-45-12. Gasket shall be the flush type that fills the entire cavity between the fitting and the pipe. Nuts and bolts shall be heat-treated steel conforming to ASTM A 183 and shall be cadmium plated or zinc electroplated.

2.3.1.4 Flanges

Flanges shall conform to NFPA 13 and ASME B16.1. Gaskets shall be non-asbestos compressed material in accordance with ASME B16.21, 1.6 mm (1/16 inch) thick, and full face or self-centering flat ring type. Bolts shall be squarehead conforming to ASME B18.2.1 and nuts shall be hexagon type conforming to ASME B18.2.2.

2.3.4 Pipe Hangers

Hangers shall be listed in UL-04 or FM P7825 and of the type suitable for the application, construction, and pipe type and sized involved. Where building steel members (purlins) are concealed by metal liner panels, self taping screws may be used if all requirements of NFPA 13, Section 2.6 are

met, including detailed calculations certified by a registered professional engineer.

2.3.5 Valves

2.3.5.1 Control Valve and Gate Valve

Manually operated sprinkler control valve and gate valve shall be outside stem and yoke (OS&Y) type and shall be listed in UL-01 or FM P7825.

2.3.5.2 Check Valve

Check valve 2 inches and larger shall be listed in UL-01 or FM P7825. Check valves 4 inches and larger shall be of the swing type with flanged cast iron body and flanged inspection plates, shall have a clear waterway and shall meet the requirements of MSS SP-71, for Type 3 or 4.

2.4 ALARM CHECK VALVE ASSEMBLY

Assembly shall include an alarm check valve, standard trim piping, pressure gauges, bypass, retarding chamber, testing valves, main drain, and other components as required for a fully operational system.

2.6 ALARM INITIATING AND SUPERVISORY DEVICES

2.6.2 Sprinkler Pressure (Waterflow) Alarm Switch

Pressure switch shall include a metal housing with a neoprene diaphragm, SPDT snap action switches and a 15 mm (1/2 inch) NPT male pipe thread. The switch shall have a maximum service pressure rating of 1207 Kpa (175 psi). There shall be two SPDT (Form C) contacts factory adjusted to operate at 28 to 55 KPa (4 to 8 psi). The switch shall be capable of being mounted in any position in the alarm line trim piping of the alarm check valve.

2.6.3 Valve Supervisory (Tamper) Switch

Switches shall be suitable for mounting to the type of control valve to be supervised open. The switch shall be tamper resistant and contain one set of SPDT (Form C) contacts arranged to transfer upon removal of the housing cover or closure of the valve of more than two rotations of the valve stem.

2.7 FIRE DEPARTMENT CONNECTION

Fire department connection shall be projecting type with cast brass body, matching wall escutcheon lettered "Auto Spkr" with a polished brass finish. The connection shall have two inlets with individual self-closing clappers, caps with drip drains and chains. Female inlets shall have 65 mm (2-1/2 inch) diameter American National Fire Hose Connection Screw Threads (NH) per NFPA 1963.

2.8 SPRINKLERS

Sprinklers shall be used in accordance with their listed spacing limitations. Temperature classification shall be ordinary. Sprinklers in high heat areas including attic spaces or in close proximity to unit heaters shall have temperature classification in accordance with NFPA 13.

2.8.1 Upright Sprinkler

Upright sprinkler shall be brass and shall have a nominal 1/2 inch or 17/32 inch orifice.

2.8.2 Pendent Sprinkler

Pendent sprinkler shall be of the fusible strut or glass bulb type, semi-recessed type with nominal 1/2 inch or 17/32 inch orifice. Pendent sprinklers shall have a white enamel finish.

2.10 ACCESSORIES

2.10.1 Sprinkler Cabinet

Spare sprinklers shall be provided in accordance with NFPA 13 and shall be packed in a suitable metal or plastic cabinet. Spare sprinklers shall be representative of, and in proportion to, the number of each type and temperature rating of the sprinklers installed. At least one wrench of each type required shall be provided.

2.10.2 Pendent Sprinkler Escutcheon

Escutcheon shall be two-piece, adjustable metallic type suitable for installation on pendent sprinklers. The escutcheon shall have a factory finish that matches the pendent sprinkler heads.

2.10.3 Pipe Escutcheon

Escutcheon shall be polished chromium-plated zinc alloy, or polished chromium-plated copper alloy. Escutcheons shall be either one-piece or split-pattern, held in place by internal spring tension or set screw.

2.10.5 Identification Sign

Valve identification sign shall be minimum 150 mm (6 inches) wide x 50 mm (2 inches) high with enamel baked finish on minimum 1.214 mm (18 gauge) steel or 0.024 inch aluminum with red letters on a white background or white letters on red background. Wording of sign shall include, but not be limited to "main drain," "auxiliary drain," "inspector's test," "alarm test," "alarm line," and similar wording as required to identify operational components.

2.12 REDUCED PRESSURE ZONE BACKFLOW PREVENTION ASSEMBLY

Reduced Pressure Zone backflow prevention assembly shall comply with ASSE 1015. The assembly shall have a bronze, cast-iron or stainless steel body with flanged ends. The assembly shall include OS&Y shutoff valves on the inlet and outlet, 2-positive-seating check valve for continuous pressure application, and four test cocks. Assemblies shall be rated for working pressure of 1207 KPa (175 psi). The maximum pressure loss shall be 11 psi at a flow rate equal to the sprinkler water demand, at the location of the assembly.

PART 3 EXECUTION

3.1 INSTALLATION REQUIREMENTS

The installation shall be in accordance with the applicable provisions of NFPA 13, NFPA 24 and publications referenced therein.

3.2 ABOVEGROUND PIPING INSTALLATION

Piping shall be run straight and bear evenly on hangers and supports.

3.2.1 Protection of Piping Against Earthquake Damage

The system piping shall be protected against damage from earthquakes. Seismic protection of the piping system shall be provided in accordance with NFPA 13 and Appendix A, with the exception that the "Earthquake Zones" map of Appendix A shall not apply to this project. Seismic protection shall include flexible couplings, sway bracing, seismic separation assemblies where piping crosses building seismic separation joints, and other features as required in NFPA 13 for protection of piping against damage from earthquakes. Branch lines shall be equipped with sway braces at the end sprinkler head and at intervals not exceeding 30 ft.

3.2.2 Piping in Exposed Areas

Exposed piping shall be installed so as not to diminish exit access widths, corridors or equipment access. Exposed horizontal piping, including drain piping, shall be installed to provide maximum headroom.

3.2.3 Piping in Finished Areas

In areas with suspended or dropped ceilings and in areas with concealed spaces above the ceiling, piping shall be concealed above ceilings. Piping shall be inspected, tested and approved before being concealed. Risers and similar vertical runs of piping in finished areas shall be concealed.

3.2.4 Pendent Sprinklers

Drop nipples to pendent sprinklers shall consist of minimum 25 mm (1 inch) pipe with a reducing coupling into which the sprinkler shall be threaded. Hangers shall be provided on arm-overs to drop nipples supplying pendent sprinklers when the arm-over exceeds 12 inches. Recessed pendent sprinklers shall be installed such that the distance from the sprinkler deflector to the underside of the ceiling shall not exceed the manufacturer's listed range and shall be of uniform depth throughout the finished area.

3.2.4.1 Pendent Sprinkler Locations

Pendent sprinklers in suspended ceilings shall be a minimum of 6 inches from ceiling grid.

3.2.5 Upright Sprinklers

Riser nipples or "sprigs" to upright sprinklers shall contain no fittings between the branch line tee and the reducing coupling at the sprinkler. Riser nipples exceeding 30 inches in length shall be individually supported.

3.2.6 Pipe Joints

Pipe joints shall conform to NFPA 13, except as modified herein. Not more than four threads shall show after joint is made up. Welded joints will be permitted, only if welding operations are performed as required by NFPA 13 at the Contractor's fabrication shop, not at the project construction site. Flanged joints shall be provided where indicated or required by NFPA 13. Grooved pipe and fittings shall be prepared in accordance with the manufacturer's latest published specification according to pipe material, wall thickness and size. Grooved couplings and fittings shall be from the same manufacturer.

3.2.7 Reducers

Reductions in pipe sizes shall be made with one-piece tapered reducing fittings. The use of grooved-end or rubber-gasketed reducing couplings will not be permitted.

3.2.8 Pipe Penetrations

Cutting structural members for passage of pipes or for pipe-hanger fastenings will not be permitted. Pipes that must penetrate concrete or masonry walls or concrete floors shall be core-drilled and provided with pipe sleeves. Each sleeve shall be Schedule 40 galvanized steel, ductile iron or cast iron pipe and shall extend through its respective wall or floor and be cut flush with each wall surface. Sleeves shall provide required clearance between the pipe and the sleeve per NFPA 13. The space between the sleeve and the pipe shall be firmly packed with mineral wool insulation. Where pipes pass through fire walls, fire partitions, or floors, a fire seal shall be placed between the pipe and sleeve in accordance with Section 07270 FIRESTOPPING. In penetrations which are not fire-rated or not a floor penetration, the space between the sleeve and the pipe shall be sealed at both ends with plastic waterproof cement which will dry to a firm but pliable mass or with a mechanically adjustable segmented elastomer seal.

3.2.9 Escutcheons

Escutcheons shall be provided for pipe penetration of ceilings and walls. Escutcheons shall be securely fastened to the pipe at surfaces through which piping passes.

3.2.10 Inspector's Test Connection

Unless otherwise indicated, test connection shall consist of 1 inch pipe connected to the remote branch line; a test valve located approximately 7 feet above the floor; a smooth bore brass outlet equivalent to the smallest

orifice sprinkler used in the system; and a painted metal identification sign affixed to the valve with the words "Inspector's Test." The discharge orifice shall be located outside the building wall directed so as not to cause damage to adjacent construction or landscaping during full flow discharge.

3.2.11 Drains

Main drain piping shall be provided to discharge at the location indicated. Auxiliary drains shall be provided as required by NFPA 13 except that drain valves shall be used where drain plugs are otherwise permitted. Where branch lines terminate at low points and form trapped sections, such branch lines shall be manifolded to a common drain line.

3.2.12 Installation of Fire Department Connection

Connection shall be mounted as shown. The piping between the connection and the check valve shall be provided with an automatic drip in accordance with NFPA 13 and arranged to drain to the outside.

3.2.13 Identification Signs

Signs shall be affixed to each control valve, inspector test valve, main drain, auxiliary drain, test valve, and similar valves as appropriate or as required by NFPA 13. Hydraulic design data nameplates shall be permanently affixed to each sprinkler riser as specified in NFPA 13.

3.3 UNDERGROUND PIPING INSTALLATION

The fire protection water main shall be laid, and joints anchored, in accordance with NFPA 24. Minimum depth of cover shall be 3 feet. The supply line shall terminate inside the building with a flanged piece, the bottom of which shall be set not less than 6 inches above the finished floor. A blind flange shall be installed temporarily on top of the flanged piece to prevent the entrance of foreign matter into the supply line. A concrete thrust block shall be provided at the elbow where the pipe turns up toward the floor. In addition, joints shall be anchored in accordance with NFPA 24 using pipe clamps and steel rods from the elbow to the flange above the floor and from the elbow to a pipe clamp in the horizontal run of pipe. Buried steel components shall be provided with a corrosion protective coating in accordance with AWWA C203. Piping more than 5 feet outside the building walls shall meet the requirements of Section 02660 WATER LINES.

3.4 EARTHWORK

Earthwork shall be performed in accordance with applicable provisions of Section 02221 EXCAVATION, FILLING AND BACKFILLING FOR BUILDINGS.

3.5 ELECTRICAL WORK

Alarm signal wiring connected to the building fire alarm control system shall be in accordance with Section 16721 FIRE DETECTION AND ALARM SYSTEM.

3.7 FIELD PAINTING AND FINISHING

Field painting and finishing are specified in Section 09900 PAINTING, GENERAL.

3.8 PRELIMINARY TESTS

The system, including the underground water mains, and the aboveground piping and system components, shall be tested to assure that equipment and components function as intended. The underground and aboveground interior piping systems and attached appurtenances subjected to system working pressure shall be tested in accordance with NFPA 13 and NFPA 24. Upon completion of specified tests, the Contractor shall complete certificates as specified in paragraph SUBMITTALS.

3.8.1 Underground Piping

3.8.1.1 Flushing

Underground piping shall be flushed in accordance with NFPA 24. This includes the requirement to flush the lead-in connection to the fire protection system at a flow rate not less that the calculated maximum water demand rate of the system.

3.8.1.2 Hydrostatic Testing

New underground piping shall be hydrostatically tested in accordance with NFPA 24. The allowable leakage shall be measured at the specified test pressure by pumping from a calibrated container. The amount of leakage at the joints shall not exceed 2 quarts per hour per 100 gaskets or joints, regardless of pipe diameter.

3.8.2 Aboveground Piping

3.8.2.1 Hydrostatic Testing

Aboveground piping shall be hydrostatically tested in accordance with NFPA 13 at not less than 200 psi or 50 psi in excess of maximum system operating pressure and shall maintain that pressure without loss for 2 hours. There shall be no drop in gauge pressure or visible leakage when the system is subjected to the hydrostatic test. The test pressure shall be read from a gauge located at the low elevation point of the system or portion being tested.

3.8.3 Testing of Alarm Devices

Each alarm switch shall be tested by flowing water through the inspector's test connection. Each water-operated alarm devices shall be tested to verify proper operation.

3.8.4 Main Drain Flow Test

Following flushing of the underground piping, a main drain test shall be made to verify the adequacy of the water supply. Static and residual pressures shall be recorded on the certificate specified in paragraph SUBMITTALS. In addition, a main drain test shall be conducted each time after a main control valve is shut and opened.

3.9 FINAL ACCEPTANCE TEST

A technician employed by the installing Contractor shall be present for the final tests and shall provide a complete demonstration of the operation of the system. This shall include operation of control valves and flowing of inspector's test connections to verify operation of associated waterflow alarm switches. After operation of control valves has been completed, the main drain test shall be repeated to assure that control valves are in the open position. In addition, the representative shall have available copies of as-built drawings and certificates of tests previously conducted. The installation shall not be considered accepted until identified discrepancies have been corrected and test documentation is properly completed and received.

END OF SECTION

SECTION 15332

PREACTION AND DELUGE SPRINKLER SYSTEMS, FIRE PROTECTION

PART 1 GENERAL

1.1 REFERENCES

The publications listed below form a part of this specification to the extent referenced. The publications are referred to in the text by basic designation only.

AMERICAN SOCIETY FOR TESTING AND MATERIALS (ASTM)

ASTM A 47	(1990) Ferritic Malleable Iron Castings
ASTM A 53	(1995a) Pipe, Steel, Black and Hot-Dipped, Zinc-Coated Welded and Seamless
ASTM A 135	(1993) Electric-Resistance-Welded Steel Pipe
ASTM A 183	(1983; R 1990) Carbon Steel Track Bolts and Nuts
ASTM A 536	(1984; R 1993) Ductile Iron Castings
ASTM A 795	(1995) Black and Hot-Dipped Zinc-Coated (Galvanized) Welded and Seamless Steel Pipe for Fire Protection Use

AMERICAN SOCIETY OF MECHANICAL ENGINEERS (ASME)

ASME B16.1	(1989) Cast Iron Pipe Flanges and Flanged Fittings
ASME B16.3	(1992) Malleable Iron Threaded Fittings
ASME B16.4	(1992) Cast Iron Threaded Fittings
ASME B16.9	(1993) Factory-Made Wrought Steel Buttwelding Fittings
ASME B16.11	(1991) Forged Fittings, Socket-Welding and Threaded
ASME B16.21	(1992) Nonmetallic Flat Gaskets for Pipe Flanges
ASME B18.2.1	(1981; Supple 1991; R 1992) Square and Hex Bolts and Screws (Inch Series)
ASME B18.2.2	(1987; R 1993) Square and Hex Nuts (Inch Series)

FACTORY MUTUAL ENGINEERING AND RESEARCH (FM)

FM P7825	(1998; Supple 1; Supple II; Supple III) Approval Guide

INSTITUTE OF ELECTRICAL AND ELECTRONICS ENGINEERS (IEEE)

IEEE C62.41	(1991) Surge Voltages in Low-Voltage AC Power Circuits

MANUFACTURERS STANDARDIZATION SOCIETY OF THE VALVE AND FITTINGS INDUSTRY (MSS)

MSS SP-71	(1990) Cast Iron Swing Check Valves, Flanges and Threaded Ends

NATIONAL FIRE PROTECTION ASSOCIATION (NFPA)

NFPA 13	(1996) Installation of Sprinkler Systems
NFPA 70	(1996) National Electrical Code
NFPA 72	(1993) National Fire Alarm Code

NATIONAL INSTITUTE FOR CERTIFICATION IN ENGINEERING TECHNOLOGIES (NICET)

NICET 1014	(1995) Program Detail Manual for Certification in the Field of Fire Protection Engineering Technology (Field Code 003) automatic Sprinkler System Layout

UNDERWRITERS LABORATORIES (UL)

UL-01	(1998) Building Materials Directory
UL-04	(1998; Supple) Fire Protection Equipment Directory

1.2 GENERAL REQUIREMENTS

The system shall consist of an automatic preaction sprinkler system and shall be provided in areas indicated on the drawings. The sprinkler system shall provide fire sprinkler protection for the entire area. Except as modified herein, the system shall meet the requirements of NFPA 13 and NFPA 72. The sprinkler system shall be a single interlocked system that requires the actuation of two cross zoned alarm initiating devices (a heat detector and a smoke detector) to open the water control (deluge) valve. Pipe sizes which are not indicated on the drawings shall be determined by hydraulic calculations.

1.2.1 Hydraulic Design

The system shall be hydraulically designed to discharge a minimum density of as shown over the hydraulically most demanding 279 square meters 3,000square

feet of floor area. Hydraulic calculations shall be provided in accordance with the Area/Density Method of NFPA 13.

1.2.1.1 Hose Demand

An allowance for exterior hose streams of 1893 L/min (500 gpm) shall be added to the sprinkler system demand at the fire hydrant shown on the drawings closest to the point where the water service enters the building.

1.2.1.2 Basis for Calculations

The design of the system shall be based on a water supply which has data as shown on the drawings. Water supply shall be presumed available at the point of connection to existing piping. Hydraulic calculations shall be based upon the Hazen-Williams formula with a "C" value of 100 for steel piping, and 140 for new cement-lined ductile-iron piping

1.2.2 Sprinkler Spacing

Sprinklers shall be uniformly spaced on branch lines. Maximum spacing per sprinkler shall not exceedlimits specified in NFPA 13 forordinary hazard occupancy.

1.2.3 Control System

The control system shall be the Fire Alarm Panel as specified in Section 16721, Fire Detection and Alarm System. The solenoid valve which activates the water control (delude) valve shall be compatible with, and cross listed with the Fire Alarm Panel.

1.3 SYSTEM OPERATIONAL FEATURES

Preaction sprinkler system piping shall be provided with supervisory air pressure not to exceed 210 KPa (30 psig).

1.3.1 System Actuation

Activation of any single smoke detector and any single heat detector shall actuate alarm zone circuits of the Fire Alarm panel which, in turn, shall actuate the respective automatic water control valve. Actuation of the automatic water control valve shall cause water to fill the preaction system piping and be discharged from fused sprinklers.

1.3.2 Alarm Functions shall be as specified in Section 16721.

1.4 SUBMITTALS

Government approval is required for submittals with a "GA" designation; submittals having an "FIO" designation are for information only. Submittals related to system configuration, hydraulic calculations, and equipment selection, including manufacturer's catalog data, working drawings, connection drawings, control diagrams and certificates shall be submitted concurrently as a complete package. The package will be reviewed by the U.S. Army Engineer District Fire Protection Engineer. The following shall be submitted in accordance with Section 01300 SUBMITTAL PROCEDURES:

SD-01 Data

Load Calculations for Sizing Sway Bracing

For systems that are required to be protected against damage from earthquakes, load calculations shall be provided for sizing of sway bracing.

Sprinkler System Equipment; GA.

Manufacturer's Catalog Data for each piece of equipment proposed for use in the system. Data shall indicate the name of the manufacturer of each item of equipment, with data highlighted to indicate model, size, options, etc. proposed for installation. In addition, a complete equipment list which includes equipment description, model number and quantity shall be provided.

Hydraulic Calculations; GA.

Hydraulic calculations, including a drawing showing hydraulic reference points.

Spare Parts;.

Spare parts data shall be included for each different item of material and equipment specified. The data shall include a complete list of parts and supplies, with current unit prices and source of supply, and a list of parts recommended by the manufacturer to be replaced after 1 year and 3 years of service. A list of special tools and test equipment required for maintenance and testing of the products supplied by the Contractor shall be included.

SD-04 Drawings

Sprinkler System Shop Drawings; GA.

Detail drawings conforming to the requirements established for working plans as prescribed in NFPA 13. Drawings shall include plan and elevation views which establish that the equipment will fit the allotted spaces with clearance for installation and maintenance. Each set of drawings shall include the following:

a. Descriptive index of drawings in the submittal with drawings listed in sequence by drawing number. A legend identifying device symbols, nomenclature, and conventions used.

b. Floor plans drawn to a scale not less than 1/8"= 1'-0" which clearly show locations of sprinklers, risers, pipe hangers, seismic separation assemblies, sway bracing, drains, and other applicable details necessary to clearly describe the proposed arrangement. Each type of fitting used and the locations of bushings, reducing couplings, and welded joints shall be indicated.

c. Actual center-to-center dimensions between sprinklers on branch lines and between branch lines; from end sprinklers to adjacent walls; from walls to branch lines; from sprinkler feed mains, cross-mains and branch lines to finished floor and roof or ceiling. A detail shall show the dimension from the sprinkler and sprinkler deflector to the ceiling in finished areas.

d. Longitudinal and transverse building sections showing typical branch line and cross-main pipe routing as well as elevation of each typical sprinkler above finished floor.

e. Details of each type of riser assembly; pipe hanger; sway bracing for earthquake protection, and restraint of underground water main at point-of-entry into the building.

As-Built Drawings

As-built drawings, no later than 14 days after completion of the Final Tests. The sprinkler system shop drawings shall be updated to reflect as-built conditions after all associated work is completed and shall be submitted on reproducible full-size mylar film.

SD-06 Instructions

Test Procedures; GA.

Proposed test procedures for piping hydrostatic test, and trip-tests of automatic water control valve, at least 14 days prior to the start of related testing.

SD-07 Schedules

Preliminary Tests; GA.

A schedule of preliminary tests, at least 14 days prior to the proposed start of tests.

Final Test; GA.

Upon successful completion of tests specified in paragraph PRELIMINARY TESTS, written notification shall be given to the Contracting Officer of the date for the final acceptance test. Notification shall be provided at least 14 days prior to the proposed start of the final test. Notification shall include a copy of the Contractor's Material & Test Certificates.

SD-08 Statements

Installer Qualifications; GA.

Qualifications of the sprinkler installer.

Submittal Preparer's Qualifications; GA.

The name and documentation of certification of the individual who will prepare the submittals, prior to the submittal of the drawings and hydraulic calculations.

SD-13 Certificates

Contractor's Material & Test Certificates; GA.

Certificates, as specified in NFPA 13, shall be completed and signed by the Contractor's representative performing required tests for both underground and aboveground piping.

SD-19 Operation and Maintenance Manuals

Sprinkler System; GA.

Manuals shall be in loose-leaf binder format and grouped by technical sections consisting of manufacturer's standard brochures, schematics, printed instructions, general operating procedures, and safety precautions. The manuals shall list routine maintenance procedures, possible breakdowns, and repairs, and troubleshooting guide. This shall include procedures and instructions pertaining to frequency of preventive maintenance, inspection, adjustment, lubrication and cleaning necessary to minimize corrective maintenance and repair.

1.5 HYDRAULIC CALCULATIONS

Hydraulic calculations shall be as outlined in NFPA 13 except that calculations shall be performed by computer using software specifically designed for fire protection system design. Software which uses k-factors for typical branch lines is not acceptable. Calculations shall be taken back to the water supply source or to the point where flow test data was measured. Calculations shall substantiate that the design area indicated is the hydraulically most demanding. Water supply curves and system requirements shall be plotted on semi-logarithmic graph paper so as to present a summary of the complete hydraulic calculations. A summary sheet listing all sprinklers in the design area and their respective hydraulic reference points, elevations, actual discharge pressures and actual flows shall be provided. Elevations of hydraulic reference points (nodes) shall be indicated. Documentation shall identify each pipe individually and the nodes connected thereto. The diameter, length, flow, velocity, friction loss, number and type fittings, total friction loss in the pipe, equivalent pipe length and Hazen-Williams coefficient shall be indicated for each pipe. For grid systems, calculations shall show peaking of demand area friction loss to verify that the hydraulically most demanding area is being used. Hydraulic reference points (nodes) and pipe designations used in the calculations shall be includedon the shop drawings.

1.6 SUBMITTAL PREPARER'S QUALIFICATIONS

The sprinkler system submittals, including as-built drawings, shall be prepared by an individual who is either a registered professional engineer or who is certified as a Level IV Technician by National Institute for Certification in Engineering Technologies (NICET) in the Automatic Sprinkler System Layout subfield of Fire Protection Engineering Technology in accordance with NICET 1014.

1.7 INSTALLER QUALIFICATIONS

The installer shall be experienced and regularly engaged in the installation of the type and complexity of system included in this project. A statement prior to submittal of any other data or drawings, that the proposed sprinkler system installer is regularly engaged in the installation of the type and complexity of system included in this project shall be provided. In addition, data identifying the location of at least three systems recently installed by the proposed installer which are comparable to the system specified shall be submitted. Contractor shall certify that each system has performed satisfactorily, in the manner intended, for a period of not less than 6 months.

1.8 REGULATORY REQUIREMENTS

Compliance with referenced NFPA standards is mandatory. This includes advisory provisions listed in the appendices of such standards, as though the word "shall" had been substituted for the word "should" wherever it appears. Applicable material and installation standards referenced in

Appendix A of NFPA 13 and NFPA 24 shall be considered mandatory the same as if such referenced standards were specifically listed in this specification. In the event of a conflict between specific provisions of this specification and applicable NFPA standards, this specification shall govern. All requirements that exceed the minimum requirements of NFPA 13 shall be incorporated into the design. Reference to "authority having jurisdiction" shall be interpreted to mean the Contracting Officer.

1.9 DELIVERY AND STORAGE

Equipment placed in storage shall be stored with protection from the weather, humidity and temperature variations, dirt and dust or other contaminants.

PART 2 PRODUCTS

2.1 GENERAL EQUIPMENT REQUIREMENTS

2.1.1 Standard Products

Material and equipment shall be standard products of a manufacturer regularly engaged in the manufacture of such products and shall essentially duplicate items that have been in satisfactory use for at least 2 years prior to bid opening.

2.1.2 Requirements for Fire Protection Service

Unless otherwise specified, equipment and materials shall have been tested by Underwriters' Laboratories, Inc. and listed in UL-04 or approved by Factory Mutual and listed in FM P7825. Where the terms "listed" or "approved" appear in this specification, such shall mean listed in UL-04 or FM P7825.

2.1.3 Nameplates

Major components of equipment shall have the manufacturer's name, address, type or style, model or serial number, voltage and current rating and catalog number on a metal plate permanently affixed to the equipment.

2.2 UNDERGROUND PIPING SYSTEMS - SPECIFIED IN SECTION 15330.

2.3 ABOVEGROUND PIPING SYSTEMS

2.3.1 Piping Systems shall be as specified in Section 15330.

2.3.2 Fittings for Non-Grooved Piping shall be as specified in Section 15330.

2.3.3 Grooved Mechanical Joints and Fittings shall be as specified in Section 15330.

2.3.4 Flanges shall be as specified in Section 15330.

2.3.5 Pipe Hangers shall be as specified in Section 15330.

2.3.6 Valves

2.3.6.1 Control Valve and Gate Valve

Manually operated sprinkler control valve and gate valve shall be outside stem and yoke (OS&Y) gate valves and shall be listed in UL-01 or FM P7825.

2.3.6.2 Check Valves

Check valves 2 inches and larger shall be listed in UL-01 or FM P7825. Check valves 4 inches and larger shall be of the swing type with flanged cast iron body and flanged inspection plates, shall have a clear waterway and shall meet the requirements of MSS SP-71, for Type 3 or 4.

2.4 AUTOMATIC WATER CONTROL VALVE (DELUGE VALVE)

Automatic water control valve (deluge valve) shall be electrically-actuated and rated for a working pressure of 175 psi.Valve shall be capable of being reset without opening the valve. Electrical solenoid valve used to actuate the water control valve shall be an integral component of the valve or shall be approved for use by the water control valve manufacturer. Solenoid valve shall be rated at 24 volts direct current, and shall be normally closed type which operates when energized. Solenoid valves shall be rated for a maximum pressure differential of 175 psi. Water control valve shall be equipped with a means to prevent the valve from returning to the closed position until being manually reset. Assembly shall be complete with the valve manufacturer's standard trim piping, drain and test valves, pressure gauges, and other required appurtenances. Each assembly shall include an emergency release device for manually tripping the water control valve in the event of a power or other system failure. Device shall be a standard accessory component of the valve manufacturer and shall be labeled as to its function and method of operation.

2.5 SUPERVISORY AIR SYSTEM

2.5.1 Air Compressor

Air compressor shall be single stage, riser mounted type, air cooled, electric-motor driven, equipped with a check valve, centrifugal pressure and moisture unloader, pressure switch for automatic starting and stopping. Pressure switch shall be set to start the compressor at 20psi and stop it at 30 psi. A safety relief valve, set to operate at 65 psi, shall be provided. The compressor shall be sized to pressurize the system to 30psi within 30 minutes.

2.5.2 Air Pressure Maintenance Device

Device shall be a pressure regulator which automatically reduces supply air pressure to the minimum pressure required to be maintained in the piping system. The device shall have a cast bronze body and valve housing complete with diaphragm assembly, spring, filter, ball check to prevent backflow, 1/16 inch restriction to prevent rapid pressurization of the system, and adjustment screw.

2.5.3 Air Supply Piping System

System shall be configured so that each preaction system is equipped with a separate pressure maintenance device, shutoff valve, bypass valve and pressure gauge. Piping shall be steel in accordance with ASTM A 795 or ASTM A 53.

2.5.4 Low Air Pressure Switch

Each preaction system shall be provided with an air pressure switch connected to the control panel. Upon reduction of supervisory air pressure to approximately 10 psig, the pressure switch shall actuate the trouble alarm device and low-air alarm light on the control panel annunciator.

2.7 FIRE DEPARTMENT CONNECTION – SPECIFIED IN SECTION 15330.

2.8 SPRINKLERS

Sprinklers for preaction systems shall be automatic, fusible solder or glass bulb type, with a temperature classification of ordinary. Closed-head sprinklers in high heat areas including attic spaces or in close proximity to unit heaters shall have temperature classification in accordance with NFPA 13. Sprinklers shall be used in accordance with their listed spacing limitations.

2.8.1 Upright Sprinkler

Upright sprinkler shall be brass. Closed-head sprinklers shall be standard response type. Sprinkler shall have an orifice of 1/2 inch or 17/32 inch in diameter.

2.11 ACCESSORIES

2.11.1 Sprinkler Cabinet

Spare sprinklers shall be provided in accordance with NFPA 13 and shall be packed in a suitable metal or plastic cabinet. Spare sprinklers shall be representative of, and in proportion to, the number of each type and temperature rating of the sprinklers installed. At least one wrench of each type required, shall be provided.

2.11.3 Pipe Escutcheon

Escutcheon shall be polished chromium-plated zinc alloy, or polished chromium-plated copper alloy. Escutcheons shall be either one-piece or split-pattern, held in place by internal spring tension or set-screw.

2.11.5 Identification Sign

Valve identification sign shall be minimum 6 inches wide x 2 inches high with enamel baked finish on minimum 18 gauge steel or 0.024 inch aluminum

with red letters on a white background or white letters on red background. Wording of sign shall include, but not be limited to "main drain," "auxiliary drain," "alarm test," "alarm line," and similar wording as required to identify operational components.

2.13 ALARM INITIATING DEVICES – SPECIFIED IN SECTION 16721.

2.13.3 Sprinkler Pressure Alarm Switch (Waterflow Alarm)

Pressure switch shall include a metal housing with a neoprene diaphragm, SPDT snap action switches. The switch shall have a service pressure rating of 175 psi. There shall be two SPDT (Form C) contacts factory adjusted to operate at 4 to 8 psi.It shall be possible to mount the switch in any position in the alarm line trim piping of the automatic water control.

2.13.4 Valve Supervisory (Tamper) Switch

Switch shall be suitable for mounting to the type of control valve to be supervised open. The switch shall be tamper resistant and contain one set of SPDT (Form C) contacts arranged to transfer upon removal of the housing cover or closure of the valve of more than two rotations of the valve stem.

2.15 WIRING – SPECIFIED IN SECTION 17621

PART 3 EXECUTION

3.1 INSTALLATION REQUIREMENTS

The installation shall be in accordance with the applicable provisions of publications referenced herein.

3.2 ABOVEGROUND PIPING INSTALLATION

Piping shall be installed straight and bear evenly on hangers and supports.

3.2.1 Protection of Piping Against Earthquake Damage

The system piping shall be protected against damage from earthquakes. Seismic protection of the piping system shall be provided in accordance with NFPA 13 and Appendix A, with the exception that the "Earthquake Zones" map of Appendix A shall not apply to this project. Seismic protection shall include flexible couplings, sway bracing, seismic separation assemblies where piping crosses building seismic separation joints, and other features as required by NFPA 13 for protection of piping against damage from earthquakes. Branch lines shall be equipped with sway braces at the end sprinkler head and at intervals not exceeding 30 ft.

3.2.2 Piping in Exposed Areas

Exposed piping shall be installed so as not to diminish exit access widths, corridors or equipment access. Exposed horizontal piping, including drain piping, shall be installed to provide maximum headroom.

3.2.3 Piping in Finished Areas

In areas with suspended or dropped ceilings and in areas with concealed spaces above in the ceiling, piping shall be concealed above ceilings. Piping shall be inspected, tested and approved before being concealed. Risers and similar vertical runs of piping in finished areas shall be concealed.

3.2.5 Upright Sprinklers

Riser nipples or "sprigs" to upright sprinklers shall contain no fittings between the branch line tee and the reducing coupling at the sprinkler. Riser nipples exceeding 30 inches in length shall be individually supported.

3.2.6 Pipe Joints

Pipe joints shall conform to NFPA 13. Not more than four threads shall show after joint is made up. Welded joints will be permitted, only if welding operations are performed at the contractor's fabrication shop, not at the project construction site. Flanged joints shall be provided where indicated or required by NFPA 13. Grooved pipe and fittings shall be prepared in accordance with the manufacturer's latest published specification according to pipe material, wall thickness and size. Grooved couplings and fittings shall be from the same manufacturer.

3.2.7 Reducers

Reductions in pipe sizes shall be made with one-piece tapered reducing fittings. The use of grooved end or rubber-gasket reducing couplings will not be permitted.

3.2.8 Pipe Penetrations

Cutting structural members for passage of pipes or for pipe-hanger fastenings will not be permitted. Pipes that must penetrate concrete or masonry walls or concrete floors shall be core drilled and provided with pipe sleeves. Each sleeve shall be of Schedule 40 galvanized steel pipe, ductile iron or cast iron pipe and shall extend through its respective wall or floor and be cut flush with each wall surface. Sleeves shall provide the required clearance between the pipe and the sleeve per NFPA 13. The space between the sleeve and the pipe shall be firmly packed with mineral wool insulation. Where pipes pass through fire walls, fire partitions, or floors, a fire seal shall be placed between the pipe and sleeve in accordance with Section 07270 FIRESTOPPING. In penetrations which are not fire-rated or are not a floor penetration, the space between the sleeve and the pipe shall be sealed at both ends with plastic waterproof cement which will dry to a firm but pliable mass or with a mechanically adjustable segmented elastomer seal.

3.2.9 Escutcheons

Escutcheons shall be provided for pipe penetrations of ceilings and walls in exposed areas. Escutcheons shall be securely fastened to the pipe at surfaces through which piping passes.

3.2.10 Drains

Main drain piping shall be provided to discharge at a safe point outside the building. Auxiliary drains shall be provided as required by NFPA 13 except that drain valves shall be used where drain plugs are otherwise permitted. Velocity drip from fire department connection check valve shall drain to the outside. Where branch lines terminate at low points and form trapped sections, such branch lines shall be manifolded to a common drain line.

3.2.12 Identification Signs

Signs shall be affixed to each control valve, main drain, auxiliary drain, test valve, and similar valves. Hydraulic design data nameplates shall be permanently affixed to each sprinkler riser as specified in NFPA 13.

3.3 UNDERGROUND PIPING INSTALLATION - SPECIFIED IN SECTION 15330

3.5 ELECTRICAL WORK

Unless otherwise specified herein, power supply equipment and wiring shall be in accordance with Section 16721 Fire Detection and Alarm System.

3.7 FIELD PAINTING AND FINISHING

Field painting and finishing are specified in Section 09900 PAINTING, GENERAL.

3.8 PRELIMINARY TESTS

The system including the underground water mains, the aboveground piping, detectors and control system and system components shall be tested to assure that equipment and components function as intended. Upon completion of specified tests, the contractor shall complete certificates as specified in paragraph SUBMITTALS.

3.8.1 Flushing

Underground water mains shall be flushed in accordance with NFPA 13 and NFPA 24. This includes the requirement to flush the lead-in connection to the fire protection system at a flow rate not less than the calculated maximum water demand rate of the system.

3.8.2 Hydrostatic Tests

The underground and aboveground interior piping systems and attached appurtenances subjected to system working pressure shall be hydrostatically tested in accordance with NFPA 13 at not less than 200 psi or 50 psi in excess of maximum system operating pressure and shall maintain that pressure without loss for 2 hours. There shall be no drop in gauge pressure or visible leakage when the system is subjected to the hydrostatic test. The test pressure shall be read from a gauge located at the low elevation point of the system or portion being tested.

3.8.4 Automatic Water Control Valve Test

Each water control valve shall be independently trip-tested in accordance with the manufacturer's published instructions. Each valve shall be electrically trip-tested by actuating a respective heat detector and a manual actuation station connected to the control panel and a manual actuation device which is part of the valve trim. A full-flow main drain test shall be made. For preaction systems with supervisory air, the air pressure shall be reduced to verify proper operation of the air supply system and associated supervisory alarm devices.

3.9 FINAL TEST

A complete test of the system shall be conducted to demonstrate that the system is completely functional, that required supervisory and back-up features are provided, and that the system is correctly wired. A technician employed by the installing Contractor shall be present for tests and shall provide a complete demonstration of the operation of the system. The representative shall have available copies of as-built drawings and certificates of tests previously conducted. The installation shall not be considered accepted until all identified discrepancies have been corrected and all test documentation is properly completed and received.

3.9.1 Control System Test

Testing shall be in accordance with NFPA 72. The test shall include the following:

a. Visual inspection of wiring connections.

b. Opening the circuit at each alarm initiating device, solenoid valve, and notification appliance to test the wiring and supervisory features.

c. Test of each function of the control panel.

d. Test of each circuit in the normal, open and ground fault modes.

e. Test of each initiating device in both normal and trouble conditions.

f. Test of each control circuit and device.

g. Test of each alarm notification appliance.

3.9.2 Trip-tests of Automatic Water Control Valves

Each water control valve shall be independently trip-tested in accordance with the manufacturer's published instructions. Each valve shall be electrically trip-tested by actuating a respective heat detector, a smoke detector connected to the fire alarm panel and the manual release which is part of the valve trim. Each valve shall be returned to normal condition after each test. Control valves on preaction systems shall remain open until piping is filled with water.

3.9.3 Tests of Supervisory Air System

Preaction system supervisory air pressure shall be reduced from the normal system pressure to the point at which a low-pressure alarm is sounded. Air pressure shall be restored to verify trouble signal restoration. Automatic start/stop features of air compressor shall be tested.

END OF SECTION

SECTION 15400

PLUMBING, GENERAL PURPOSE
08/94

PART 1 GENERAL

1.1 REFERENCES

The publications listed below form a part of this specification to the extent referenced. The publications are referred to in the text by basic designation only.

AIR CONDITIONING AND REFRIGERATION INSTITUTE (ARI)

ARI 1010	(1994) Self-Contained, Mechanically-Refrigerated Drinking-Water Coolers

AMERICAN NATIONAL STANDARDS INSTITUTE (ANSI)

ANSI Z21.10.1	(1993; Z21.10.1a; Z21.10.1b; Z21.10.1c) Gas Water Heaters Vol. I Storage Water Heaters with Input Ratings of 75,000 Btu Per Hour or Less
ANSI Z21.10.3	(1993; Z21.10.3a; Z21.10.3b) Gas Water Heaters Vol. III Storage, With Input Ratings Above 75,000 Btu Per Hour, Circulating and Instantaneous Water Heaters
ANSI Z21.22	(1986; Z21.22a) Relief Valves and Automatic Gas Shutoff Devices for Hot Water Supply Systems

AMERICAN SOCIETY FOR TESTING AND MATERIALS (ASTM)

ASTM A 47	(1990) Ferritic Malleable Iron Castings
ASTM A 53	(1996) Pipe, Steel, Black and Hot-Dipped, Zinc-Coated Welded and Seamless
ASTM A 74	(1996) Cast Iron Soil Pipe and Fittings
ASTM A 105	(1996) Forgings, Carbon Steel, for Piping Components
ASTM A 193	(1996) Alloy-Steel and Stainless Steel Bolting Materials for High-Temperature Service
ASTM A 515	(1992) Pressure Vessel Plates, Carbon Steel, for Intermediate- and Higher-Temperature Service
ASTM A 516	(1990) Pressure Vessel Plates, Carbon Steel, for Moderate- and Lower-Temperature Service

ASTM A 536	(1984; R 1993) Ductile Iron Castings
ASTM A 733	(1993) Welded and Seamless Carbon Steel and Austenitic Stainless Steel Pipe Nipples
ASTM A 888	(1994) Hubless Cast Iron Soil Pipe and Fittings for Sanitary and Storm Drain, Waste, and Vent Piping Applications
ASTM B 32	(1995b) Solder Metal
ASTM B 42	(1993) Seamless Copper Pipe, Standard Sizes
ASTM B 43	(1994) Seamless Red Brass Pipe, Standard Sizes
ASTM B 75	(1993) Seamless Copper Tube
ASTM B 88	(1996) Seamless Copper Water Tube
ASTM B 152	(1994) Copper Sheet, Strip, Plate, and Rolled Bar
ASTM B 306	(1996) Copper Drainage Tube (DWV)
ASTM B 370	(1992) Copper Sheet and Strip for Building Construction
ASTM B 584	(1996) Copper Alloy Sand Castings for General Applications
ASTM B 641	(1993) Seamless and Welded Copper Distribution Tube (Type D)
ASTM B 813	(1993) Liquid and Paste Fluxes for Soldering Applications of Copper and Copper Alloy Tube
ASTM B 828	(1992) Making Capillary Joints by Soldering of Copper and Copper-Alloy Tube and Fittings
ASTM C 564	(1995) Rubber Gaskets for Cast Iron Soil Pipe and Fittings
ASTM C 920	(1994) Elastomeric Joint Sealants
ASTM D 638	(1996) Tensile Properties of Plastics
ASTM D 1004	(1994a) Initial Tear Resistance of Plastic Film and Sheeting
ASTM D 1248	(1984; R 1989) Polyethylene Plastics Molding and Extrusion Materials
ASTM D 2822	(1991) Asphalt Roof Cement

ASTM D 3139	(1989; R 1995) Joints for Plastic Pressure Pipes Using Flexible Elastomeric Seals
ASTM D 3212	(1992) Joints for Drain and Sewer Plastic Pipes Using Flexible Elastomeric Seals
ASTM D 3308	(1991a) PTFE Resin Skived Tape
ASTM D 3311	(1994) Drain, Waste, and Vent (DWV) Plastic Fittings Patterns
ASTM D 4551	(1991) Poly(Vinyl Chloride) (PVC) Plastic Flexible Concealed Water-Containment Membrane
ASTM E 1	(1995) ASTM Thermometers
ASTM E 96	(1995) Water Vapor Transmission of Materials
ASTM F 409	(1995) Thermoplastic Accessible and Replaceable Plastic Tube and Tubular Fittings
ASTM F 477	(1995) Elastomeric Seals (Gaskets) for Joining Plastic Pipe

AMERICAN SOCIETY OF MECHANICAL ENGINEERS (ASME)

ASME A112.1.2	(1991) Air Gaps in Plumbing Systems
ASME A112.6.1M	(1988) Supports for Off-the-Floor Plumbing Fixtures for Public Use
ASME A112.18.1M	(1996) Plumbing Fixture Fittings
ASME A112.19.2M	(1995; Errata) Vitreous China Plumbing Fixtures
ASME A112.19.3M	(1987; R 1996) Stainless Steel Plumbing fixtures (Designed for Residential Use)
ASME A112.21.1M	(1991) Floor Drains
ASME A112.36.2M	(1991) Cleanouts
ASME B1.20.1	(1983; R 1992) Pipe Threads, General Purpose (Inch)
ASME B16.3	(1992) Malleable Iron Threaded Fittings
ASME B16.4	(1992) Gray Iron Threaded Fittings
ASME B16.5	(1988; Errata Oct 88; B16.5a) Pipe Flanges and Flanged Fittings
ASME B16.12	(1991) Cast Iron Threaded Drainage Fittings
ASME B16.15	(1985; R 1994) Cast Bronze Threaded Fittings Classes 125 and 250

ASME B16.18	(1984; R 1994) Cast Copper Alloy Solder Joint Pressure Fittings
ASME B16.21	(1992) Nonmetallic Flat Gaskets for Pipe Flanges
ASME B16.22	(1995) Wrought Copper and Copper Alloy Solder Joint Pressure Fittings
ASME B16.23	(1992; Errata Jan 1994) Cast Copper Alloy Solder Joint Drainage Fittings - DWV
ASME B16.24	(1991; Errata) Cast Copper Alloy Pipe Flanges, Class 150, 300, 400, 600, 900, 1500 and 2500, and Flanged Fittings, Class 150 and 300
ASME B16.29	(1994) Wrought Copper and Wrought Copper Alloy Solder Joint Drainage Fittings - DWV
ASME B16.34	(1988) Valves - Flanged, Threaded, and Welding End
ASME B16.39	(1986; R 1994) Malleable Iron Threaded Pipe Unions Classes 150, 250, and 300
ASME B31.1	(1995) Power Piping
ASME B31.5	(1992; B31.5a) Refrigeration Piping
ASME B40.1	(1991) Gauges - Pressure Indicating Dial Type - Elastic Element
ASME BPV IX	(1995; Addenda Dec 1995) Boiler and Pressure Vessel Code; Section IX, Welding and Brazing Qualifications
ASME CSD-1	(1995) Controls and Safety Devices for Automatically Fired Boilers

AMERICAN SOCIETY OF SANITARY ENGINEERING (ASSE)

ASSE 1001	(1990) Pipe Applied Atmospheric Type Vacuum Breakers
ASSE 1003	(1964; Rev thru Oct 1993; Errata Dec 1993) Water Pressure Reducing Valves for Domestic Water Supply Systems
ASSE 1005	(1993) Water Heater Drain Valves - 3/4-Inch Iron Pipe Size
ASSE 1011	(1995) Hose Connection Vacuum Breakers
ASSE 1012	(1995) Backflow Preventers with Intermediate Atmospheric Vent

ASSE 1013	(1971; Rev thru Oct 1993) Reduced Pressure Principle Backflow Preventers
ASSE 1018	(1977; Rev Jan 1986) Trap Seal Primer Valves Water Supply Fed
ASSE 1037	(1986; Rev thru Mar 1990) Pressurized Flushing Devices (Flushometers) for Plumbing Fixtures/F

AMERICAN WATER WORKS ASSOCIATION (AWWA)

AWWA-01	(1995) Standard Methods for the Examination of Water and Wastewater
AWWA B300	(1992) Hypochlorites
AWWA B301	(1992) Liquid Chlorine
AWWA C105	(1993) Polyethylene Encasement for Ductile-Iron Pipe Systems
AWWA C203	(1991) Coal-Tar Protective Coatings and Linings for Steel Water Pipelines - Enamel and Tape - Hot-Applied
AWWA C606	(1987) Grooved and Shouldered Joints
AWWA M20	(1973) Manual: Water Chlorination Principles and Practices

AMERICAN WELDING SOCIETY (AWS)

AWS A5.8	(1992) Filler Metals for Brazing and Braze Welding
AWS B2.2	(1991) Brazing Procedure and Performance Qualification

CAST IRON SOIL PIPE INSTITUTE (CISPI)

CISPI 301	(1995) Hubless Cast Iron Soil Pipe and Fittings for Sanitary and Storm Drain, Waste, and Vent Piping Applications
CISPI HSN-85	(1985) Neoprene Rubber Gaskets for Hub and Spigot Cast Iron Soil Pipe and Fittings

CODE OF FEDERAL REGULATIONS (CFR)

10 CFR 430	Energy Conservation Program for Consumer Products

COMMERCIAL ITEM DESCRIPTIONS (CID)

CID A-A-238	(Rev B) Seat, Water Closet

CID A-A-240	(Basic) Shower Head, Ball Joint

COPPER DEVELOPMENT ASSOCIATION (CDA)

CDA-02	(1995) Copper Tube Handbook

COUNCIL OF AMERICAN BUILDING OFFICIALS (CABO)

CABO A117.1	(1992; Errata Jun 1993) Accessible and Usable Buildings and Facilities

FOUNDATION FOR CROSS-CONNECTION CONTROL AND HYDRAULIC RESEARCH (FCCHR)

FCCCHR-01	(1993) Manual of Cross-Connection Control

HYDRAULIC INSTITUTE (HI)

HI 1.1-1.5	(1994) Centrifugal Pumps

MANUFACTURERS STANDARDIZATION SOCIETY OF THE VALVE AND FITTINGS INDUSTRY (MSS)

MSS SP-25	(1993) Standard Marking System for Valves, Fittings, Flanges and Unions
MSS SP-44	(1996) Steel Pipe Line Flanges
MSS SP-58	(1993) Pipe Hangers and Supports - Materials, Design and Manufacture
MSS SP-67	(1995) Butterfly Valves
MSS SP-69	(1996) Pipe Hangers and Supports - Selection and Application
MSS SP-70	(1990) Cast Iron Gate Valves, Flanged and Threaded Ends
MSS SP-71	(1990) Cast Iron Swing Check Valves, Flanges and Threaded Ends
MSS SP-72	(1992) Ball Valves with Flanged or Butt-welding Ends for General Service
MSS SP-73	(1991) Brazing Joints for Copper and Copper Alloy Pressure Fittings
MSS SP-78	(1987; R 1992) Cast Iron Plug Valves, Flanged and Threaded Ends
MSS SP-80	(1997) Bronze Gate, Globe, Angle and Check Valves
MSS SP-83	(1995) Class 3000 Steel Pipe Unions Socket-Welding and Threaded

MSS SP-85	(1994) Cast Iron Globe & Angle Valves, Flanged and Threaded Ends
MSS SP-110	(1996) Ball Valves Threaded, Socket-Welding, Solder Joint, Grooved and Flared Ends

NATIONAL ASSOCIATION OF PLUMBING-HEATING-COOLING CONTRACTORS (NAPHCC)

NAPHCC-01	(1996) National Standard Plumbing Code

NATIONAL ELECTRICAL MANUFACTURERS ASSOCIATION (NEMA)

NEMA 250	(1991) Enclosures for Electrical Equipment (1000 Volts Maximum)

NATIONAL FIRE PROTECTION ASSOCIATION (NFPA)

NFPA 31	(1992) Installation of Oil Burning Equipment
NFPA 54	(1992) National Fuel Gas Code
NFPA 90A	(1993) Installation of Air Conditioning and Ventilating Systems

PLASTIC PIPE AND FITTINGS ASSOCIATION (PPFA)

PPFA-01	(1991) Plastic Pipe in Fire Resistive Construction

PLUMBING AND DRAINAGE INSTITUTE (PDI)

PDI WH 201	(1992) Water Hammer Arresters

SOCIETY OF AUTOMOTIVE ENGINEERS (SAE)

SAE J1508	(1993) Hose Clamps

1.2 STANDARD PRODUCTS

Specified materials and equipment shall be standard products of a manufacturer regularly engaged in the manufacture of such products. Specified equipment shall essentially duplicate equipment that has performed satisfactorily at least two years prior to bid opening.

1.3 PERFORMANCE REQUIREMENTS

1.3.1 Welding

Piping shall be welded in accordance with qualified procedures using performance-qualified welders and welding operators. Procedures and welders shall be qualified in accordance with ASME BPV IX. Welding procedures qualified by others, and welders and welding operators qualified by another employer, may be accepted as permitted by ASME B31.1. The Contracting Officer shall be notified 24 hours in advance of tests, and the tests shall be performed at the work site if practicable. Welders or welding operators

shall apply their assigned symbols near each weld they make as a permanent record. Structural members shall be welded in accordance with Section 05055 WELDING, STRUCTURAL.

1.3.2 Cathodic Protection and Pipe Joint Bonding

Cathodic protection and pipe joint bonding systems shall be in accordance with Section 16640 CATHODIC PROTECTION SYSTEM (SACRIFICIAL ANODE) and Section 16642 CATHODIC PROTECTION SYSTEM (IMPRESSED CURRENT).

1.4 ELECTRICAL WORK

Motors, motor controllers and motor efficiencies shall conform to the requirements of Section 16415 ELECTRICAL WORK, INTERIOR. Electrical motor-driven equipment specified herein shall be provided complete with motors. Equipment shall be rated at 60 Hz, single phase, ac unless otherwise indicated. Where a motor controller is not provided in a motor-control center on the electrical drawings, a motor controller shall be as indicated. Motor controllers shall be provided complete with properly sized thermal-overload protection in each ungrounded conductor, auxiliary contact, and other equipment, at the specified capacity, and including an allowable service factor.

1.5 SUBMITTALS

Government approval is required for submittals with a "GA" designation; submittals having an "FIO" designation are for information only. The following shall be submitted in accordance with Section 01300 SUBMITTAL PROCEDURES:

SD-01 Data

Welding; FIO.

A copy of qualified procedures and a list of names and identification symbols of qualified welders and welding operators.

Vibration-Absorbing Features; FIO.

Details of vibration-absorbing features, including arrangement, foundation plan, dimensions and specifications.

SD-04 Drawings

Plumbing System; FIO.

Detail drawings consisting of illustrations, schedules, performance charts, instructions, brochures, diagrams, and other information to illustrate the requirements and operations of each system. Detail drawings for the complete plumbing system including piping layouts and locations of connections; dimensions for roughing-in, foundation, and support points; schematic diagrams and wiring diagrams or connection and interconnection diagrams. Detail drawings shall indicate clearances required for maintenance and operation. Where piping and equipment are to be supported other than as indicated, details shall include loadings and proposed support methods. Mechanical drawing plans, elevations, views, and details, shall be drawn to scale.

Electrical Schematics; FIO.

Complete electrical schematic lineless or full line interconnection and connection diagram for each piece of mechanical equipment having more than one automatic or manual electrical control device.

SD-06 Instructions

Plumbing System; FIO.

Diagrams, instructions, and other sheets proposed for posting. Manufacturer's recommendations for the installation of bell and spigot and hubless joints for cast iron soil pipe.

SD-09 Reports

Tests, Flushing and Sterilization; FIO.

Test reports in booklet form showing all field tests performed to adjust each component and all field tests performed to prove compliance with the specified performance criteria, completion and testing of the installed system. Each test report shall indicate the final position of controls.

Backflow Prevention Assembly Tests; FIO.

Certification of proper operation shall be as accomplished in accordance with state regulations by an individual certified by the state to perform such tests. If no state requirement exists, the Contractor shall have the manufacturer's representative test the device, to ensure the unit is properly installed and performing as intended. The Contractor shall provide written documentation of the tests performed and signed by the individual performing the tests.

SD-13 Certificates

Materials and Equipment; FIO.

Where materials or equipment are specified to comply with requirements of AGA, or ASME, proof of such compliance. The label or listing of the specified agency will be acceptable evidence. In lieu of the label or listing, a written certificate may be submitted from an approved, nationally recognized testing organization equipped to perform such services, stating that the items have been tested and conform to the requirements and testing methods of the specified agency. Where equipment is specified to conform to requirements of the ASME Boiler and Pressure Vessel Code, the design, fabrication, and installation shall conform to the code.

Bolts; FIO.

Written certification by the bolt manufacturer that the bolts furnished comply with the specified requirements. The certification shall include illustrations of product-required markings, the date of manufacture, and the number of each type of bolt to be furnished based on this certification.

SD-19 Operation and Maintenance Manuals

Plumbing System; FIO.

Six copies of the operation manual outlining the step-by-step procedures required for system startup, operation and shutdown. The manual shall include the manufacturer's name, model number, service manual, parts list, and brief description of all equipment and their basic operating features. Six copies of the maintenance manual listing routine maintenance procedures, possible breakdowns and repairs. The manual shall include piping and equipment layout and simplified wiring and control diagrams of the system as installed.

1.6 REGULATORY REQUIREMENTS

1.6.1 Plumbing

Plumbing work shall be in accordance with NAPHCC-01.

1.7 PROJECT/SITE CONDITIONS

The Contractor shall become familiar with details of the work, verify dimensions in the field, and advise the Contracting Officer of any discrepancy before performing any work.

PART 2 PRODUCTS

2.1 MATERIALS

Materials for various services shall be in accordance with TABLES I and II. Pipe schedules shall be selected based on service requirements. Pipe fittings shall be compatible with the applicable pipe materials. Grooved pipe couplings and fittings shall be from the same manufacturer. Material or equipment containing lead shall not be used in any potable water system. Hubless cast-iron soil pipe shall not be installed under concrete floor slabs or in crawl spaces below kitchen floors.

2.1.1 Pipe Joint Materials

Joints and gasket materials shall conform to the following:

a. Coupling for Cast-Iron Pipe: ASTM A 74, AWWA C606.

b. Flange Gaskets: Gaskets shall be made of non-asbestos material in accordance with ASME B16.21. Gaskets shall be flat, 1.6 mm thick, and contain Aramid fibers bonded with Styrene Butadiene Rubber (SBR) or Nitro Butadiene Rubber (NBR). Gaskets shall be the full face or self centering flat ring type. Gaskets used for hydrocarbon service shall be bonded with NBR.

c. Neoprene Gaskets for Hub and Cast-Iron Pipe and Fittings: CISPI HSN-85.

d. Brazing Material: Brazing material shall conform to AWS A5.8, BCuP-5.

e. Brazing Flux: Flux shall be in paste or liquid form appropriate for use with brazing material. Flux shall be as follows: lead-free; have a 100 percent flushable residue; contain slightly acidic

reagents; contain potassium borides; and contain fluorides. Silver brazing materials shall be in accordance with AWS A5.8.

f. Solder Material: Solder metal shall conform to ASTM B 32 95-5 tin-antimony.

g. Solder Flux: Flux shall be liquid form, non-corrosive, and conform to ASTM B 813, Standard Test 1.

h. PTFE Tape: PTFE Tape, for use with Threaded Metal, ASTM D 3308.

i. Rubber Gaskets for Cast-Iron Soil-Pipe and Fittings: ASTM C 564.

j. Flexible Elastomeric Seals: ASTM D 3139, ASTM D 3212 or ASTM F 477.

k. Flanged fittings including flanges, bolts, nuts, bolt patterns, etc. shall be in accordance with ASME B16.5 class 150 and shall have the manufacturer's trademark affixed in accordance with MSS SP-25. Flange material shall conform to ASTM A 105. Blind flange material shall conform to ASTM A 516 cold service and ASTM A 515 for hot service. Bolts shall be high strength or intermediate strength with material conforming to ASTM A 193.

2.1.2 Miscellaneous Materials

Miscellaneous materials shall conform to the following:

a. Water Hammer Arrester: PDI WH 201.

b. Copper, Sheet and Strip for Building Construction: ASTM B 370.

c. Asphalt Roof Cement: ASTM D 2822.

d. Hose Clamps: SAE J1508.

e. Supports for Off-The-Floor Plumbing Fixtures: ASME A112.6.1M.

f. Metallic Cleanouts: ASME A112.36.2M.

g. Plumbing Fixture Setting Compound: A preformed flexible ring seal molded from hydrocarbon wax material. The seal material shall be nonvolatile nonasphaltic and contain germicide and provide watertight, gastight, odorproof and verminproof properties.

h. Coal-Tar Protective Coatings and Linings for Steel Water Pipelines: AWWA C203.

i. Hypochlorites: AWWA B300.

j. Liquid Chlorine: AWWA B301.

k. Polyethylene Encasement for Ductile-Iron Piping: AWWA C105.

l. Gauges - Pressure and Vacuum Indicating Dial Type - Elastic Element: ASME B40.1.

m. Thermometers: ASTM E 1.

2.1.3 Pipe Insulation Material

Insulation shall be as specified in Section 15250 THERMAL INSULATION FOR MECHANICAL SYSTEMS.

2.2 PIPE HANGERS, INSERTS, AND SUPPORTS

Pipe hangers, inserts, and supports shall conform to MSS SP-58 and MSS SP-69.

2.3 VALVES

Valves shall be provided on supplies to equipment and fixtures. Valves 65 mm and smaller shall be bronze with threaded bodies for pipe and solder-type connections for tubing. Valves 80 mm and larger shall have flanged iron bodies and bronze trim. Pressure ratings shall be based upon the application. Grooved end valves may be provided if the manufacturer certifies that the valves meet the performance requirements of applicable MSS standard. Valves shall conform to the following standards:

Description	Standard
Butterfly Valves	MSS SP-67
Cast-Iron Gate Valves, Flanged and Threaded Ends	MSS SP-70
Cast-Iron Swing Check Valves, Flanged and Threaded Ends	MSS SP-71
Ball Valves with Flanged Butt-Welding Ends for General Service	MSS SP-72
Ball Valves Threaded, Socket-Welding, Solder Joint, Grooved and Flared Ends	MSS SP-110
Cast-Iron Plug Valves, Flanged and Threaded Ends	MSS SP-78
Bronze Gate, Globe, Angle, and Check Valves	MSS SP-80
Steel Valves, Socket Welding and Threaded Ends	ASME B16.34
Cast-Iron Globe and Angle Valves, Flanged and Threaded Ends	MSS SP-85
Vacuum Relief Valves	ASSE 1001
Water Pressure Reducing Valves	ASSE 1003
Water Heater Drain Valves	ASSE 1005
Trap Seal Primer Valves	ASSE 1018

Temperature and Pressure Relief Valves for Hot Water Supply Systems	ANSI Z21.22
Temperature and Pressure Relief Valves for Automatically Fired Hot Water Boilers	ASME CSD-1 Safety Code No., Part CW, Article 5

2.3.1 Wall Faucets

Wall faucets with vacuum-breaker backflow preventer shall be brass with 20 mm male inlet threads, hexagon shoulder, and 20 mm hose connection. Faucet handle shall be securely attached to stem.

2.3.2 Wall Hydrants

Wall hydrants with vacuum-breaker backflow preventer shall have a nickle-brass or nickel-bronze wall plate or flange with nozzle and detachable key handle. A brass or bronze operating rod shall be provided within a galvanized iron casing of sufficient length to extend through the wall so that the valve is inside the building, and the portion of the hydrant between the outlet and valve is self-draining. A brass or bronze valve with coupling and union elbow having metal-to-metal seat shall be provided. Valve rod and seat washer shall be removable through the face of the hydrant. The hydrant shall have 20 mm exposed hose thread on spout and 20 mm male pipe thread on inlet.

2.3.3 Relief Valves

Water heaters and hot water storage tanks shall have a combination pressure and temperature (P&T) relief valve. The pressure relief element of a P&T relief valve shall have adequate capacity to prevent excessive pressure buildup in the system when the system is operating at the maximum rate of heat input. The temperature element of a P&T relief valve shall have a relieving capacity which is at least equal to the total input of the heaters when operating at their maximum capacity. Relief valves shall be rated according to ANSI Z21.22. Relief valves for systems where the maximum rate of heat input is less than 59 kW shall have 20 minimum inlets, and 20 mm outlets. Relief valves for systems where the maximum rate of heat input is greater than 59 kW shall have 25 mm minimum inlets, and 25 mm outlets. The discharge pipe from the relief valve shall be the size of the valve outlet.

2.4 FIXTURES

Fixtures shall be water conservation type, in accordance with NAPHCC-01. Fixtures for use by the physically handicapped shall be in accordance with CABO A117.1. Vitreous china, nonabsorbent, hard-burned, and vitrified throughout the body shall be provided. Porcelain enameled ware shall have specially selected, clear white, acid-resisting enamel coating evenly applied on surfaces. No fixture will be accepted that shows cracks, crazes, blisters, thin spots, or other flaws. Fixtures shall be equipped with appurtenances such as traps, faucets, stop valves, and drain fittings. Each fixture and piece of equipment requiring connections to the drainage system, except grease interceptors, shall be equipped with a trap. Brass expansion or toggle bolts capped with acorn nuts shall be provided for supports, and polished chromium-plated pipe, valves, and fittings shall be provided where exposed to view. Fixtures with the supply discharge below the rim shall be equipped with backflow preventers. Internal parts of flush and/or

flushometer valves, shower mixing valves, shower head face plates, pop-up stoppers of lavatory waste drains, and pop-up stoppers and overflow tees and shoes of bathtub waste drains may contain acetal resin, fluorocarbon, nylon, acrylonitrile-butadiene-styrene (ABS) or other plastic material, if the material has provided satisfactory service under actual commercial or industrial operating conditions for not less than 2 years. Plastic in contact with hot water shall be suitable for 82 degrees C water temperature. Plumbing fixtures shall be as indicated in paragraph PLUMBING FIXTURE SCHEDULE.

2.4.1 Lavatories

Vitreous china lavatories shall be provided for counter top mounting.

2.5 BACKFLOW PREVENTERS

Backflow preventers shall be approves and listed by the Foundation For Cross-Connection Control & Hydraulic Research. Reduced pressure principle assemblies, double check valve assemblies, atmospheric (nonpressure) type vacuum breakers, and pressure type vacuum breakers shall be tested, approved, and listed in accordance with FCCCHR-01. Backflow preventers with intermediate atmospheric vent shall conform to ASSE 1012. Reduced pressure principle backflow preventers shall conform to ASSE 1013. Hose connection vacuum breakers shall conform to ASSE 1011. Pipe applied atmospheric type vacuum breakers shall conform to ASSE 1001. Air gaps in plumbing systems shall conform to ASME A112.1.2.

2.6 DRAINS

2.6.1 Floor Drain "A" and Shower Drains

Floor Drain "A" and shower drains shall consist of a galvanized body, integral seepage pan, and adjustable perforated or slotted chromium-plated bronze, nickel-bronze, or nickel-brass strainer, consisting of grate and threaded collar. Floor drains shall be cast iron except where metallic waterproofing membrane is installed. Drains shall be of double drainage pattern for embedding in the floor construction. The seepage pan shall have weep holes or channels for drainage to the drainpipe. The strainer shall be adjustable to floor thickness. A clamping device for attaching flashing or waterproofing membrane to the seepage pan without damaging the flashing or waterproofing membrane shall be provided when required. Drains shall be provided with threaded or caulked connection. In lieu of a caulked joint between the drain outlet and waste pipe, a neoprene rubber gasket conforming to ASTM C 564 may be installed, provided that the drain is specifically designed for the rubber gasket compression type joint. Floor and shower drains shall conform to ASME A112.21.1M.

2.6.2 Floor Drain "B"

Floor Drain "B" shall be the same as Floor Drain 'A" above, except drain shall have a recessed strainer inside extended rim.

2.6.2.1 Metallic Shower Pan Drains

Where metallic shower pan membrane is installed, polyethylene drain with corrosion-resistant screws securing the clamping device shall be provided. Polyethylene drains shall have fittings to adapt drain to waste piping.

Polyethylene for floor drains shall conform to ASTM D 1248. Drains shall have separate cast-iron "P" trap, circular body, seepage pan, and strainer, unless otherwise indicated.

2.6.2.2 Drains and Backwater Valves

Drains and backwater valves installed in connection with waterproofed floors or shower pans shall be equipped with bolted-type device to securely clamp flashing.

2.7 SHOWER PAN

Shower pan may be copper, or nonmetallic material.

2.7.1 Sheet Copper

Sheet copper shall be 4.9 kg per square meter weight.

2.7.2 Plasticized Polyvinyl Chloride Shower Pan Material

Material shall be sheet form. The material shall be 1.016 mm minimum thickness of plasticized polyvinyl chloride or chlorinated polyethylene and shall be in accordance with ASTM D 4551.

2.7.3 Nonplasticized Polyvinyl Chloride (PVC) Shower Pan Material

Material shall consist of a plastic waterproofing membrane in sheet form. The material shall be 1.016 mm minimum thickness of nonplasticized PVC and shall have the following minimum properties:

a. ASTM D 638:

Ultimate Tensile Strength:	1.79 MPa
Ultimate Elongation:	398 percent
100 Percent Modulus:	3.07 MPa

b. ASTM D 1004:

Tear Strength:	53 kilonewtons per meter

c. ASTM E 96:

Permeance:	0.46 ng per Pa per second per square meter

d. Other Properties:

Specific Gravity:	1.29
PVC Solvent:	Weldable
Cold Crack:	minus 47 degrees C
Dimensional stability, 100 degrees C	
Hardness, Shore A:	89

2.8 TRAPS

Unless otherwise specified, traps shall be plastic per ASTM F 409 or copper-alloy adjustable tube type with slip joint inlet and swivel. Traps shall be without a cleanout. Tubes shall be copper alloy with walls not less than 0.813 mm thick within commercial tolerances, except on the outside of bends where the thickness may be reduced slightly in manufacture by usual commercial methods. Inlets shall have rubber washer and copper alloy nuts for slip joints above the discharge level. Swivel joints shall be below the discharge level and shall be of metal-to-metal or metal-to-plastic type as required for the application. Nuts shall have flats for wrench grip. Outlets shall have internal pipe thread, except that when required for the application, the outlets shall have sockets for solder-joint connections. The depth of the water seal shall be not less than 50 mm. The interior diameter shall be not more than 3.2 mm over or under the nominal size, and interior surfaces shall be reasonably smooth throughout. A copper alloy "P" trap assembly consisting of an adjustable "P" trap and threaded trap wall nipple with cast brass wall flange shall be provided for lavatories. The assembly shall be a standard manufactured unit and may have a rubber-gasketed swivel joint.

2.9 WATER HEATER

Water heater types and capacities shall be as indicated. Each primary water heater shall have controls adjustable from 32 to 49 degrees C. Each gas-fired water heater and booster water heater shall have controls adjustable from 49 to 82 degrees C. Hot water systems utilizing recirculation systems shall be tied into building off-hour controls. The thermal efficiencies and stand by heat losses shall conform to TABLE III for each type of water heater specified. The only exception is that the storage capacity need not meet the standard loss requirement if the tank surface area is not insulated to R-12.5 and if a standing light is not used.

2.9.1 Automatic Storage Type

Heaters shall be complete with control system, and shall have ASME rated combination pressure and temperature relief valve.

2.9.2 Gas-Fired Type

Gas-fired water heaters shall conform to ANSI Z21.10.1 when input is 22 kW or less or ANSI Z21.10.3 for heaters with input greater than 22 kW.

2.10 PUMPS

2.10.1 Circulating Pumps

Domestic hot water circulating pumps shall be electrically driven, single-stage, centrifugal, with mechanical seals, suitable for the intended service. Pump capacities, efficiencies, motor sizes, speeds, and impeller types shall be as shown. Pump and motor shall be close-coupled with an overhung impeller, or supported by the piping on which it is installed. The shaft shall be one-piece, heat-treated, corrosion-resisting steel with impeller and smooth-surfaced housing of bronze. Motor shall be totally enclosed, fan-cooled and shall have sufficient wattage for the service required. Pump shall conform to HI 1.1-1.5. Each pump motor shall be equipped with an across-the-line magnetic controller in a NEMA 250, Type 1

enclosure with "START-STOP" switch in cover. Pump motors smaller than 746 W shall have integral thermal overload protection in accordance with Section 16415 ELECTRICAL WORK, INTERIOR. Guards shall shield exposed moving parts.

2.11 WATER SOFTENING SYSTEM

Each softener resin tank side shell height shall be sufficient to allow a minimum freeboard space of 50 percent of the resin bed depth for adequate expansion of the resin during back washing. Tanks shall be designed for an operating pressure up to 830 kPa and shall be manufactured of fiberglass reinforced polyester. The exterior side shell shall be reinforced by a continuous roving glass filament over wrap. The tanks shall be supported by a molded polypropylene structure base.

Each softener tank shall be equipped with a soft water collector and backwash water distributor consisting of a plastic riser pipe with a fine - slotted plastic strainer attached to the bottom of the pipe, covered with a minimum of 80 mm of underbed sand to ensure even distribution of water. Each softener tank shall be equipped with an upper distributor that distributes water laterally to ensure maximum water softening capacity.

Each softener tank will be provided with 28.3 liters of resin having an exchange capacity of 70 kg per cubic meter when regenerated with 6.8 kg of salt. The media shall be solid, of the proper particle size (not more than 4 % through 40 mesh U.S. standard screens, wet screening) and will contain no agglomerates, shells plates, or other shapes that might interfere with the normal function of the water softener. The resin will be manufactured to comply with the food additive regulation, Paragraph 121.1148 of the Food and Drug Administration.

A combination salt storage and brine tank, with cover, will be provided. The tank will be molded of corrosion-proof, high-density polyethylene. The tank will be quipped with an elevated plate for brine collection, and a chamber to house a brine valve assembly. The brine valve will automatically open to admit brine to the resin tank during education and close automatically prevent introduction of air into the resin tank. During refill, the brine valve will regulate the flow of soft water into the brine tank, working with the timed refill feature of the softener control valve; together these components will admit the correct volume of water to the brine tank in accordance with the salt dosage settings on the control valve. The brine valve will include a float-operated safety shut-off valve, as a back-up to the time refill valve on the control, to prevent brine tank overflow.

The control valve shall be of all-brass construction. It will be a motor driven, mechanically-activated design with six positions to accomplish the regeneration steps of backwash, brine draw-slow rinse, fast-rinse, refill and standby in addition to the service position. The control will be fitted with a fixed orifice eductor nozzle and a self-adjusting backwash flow control. The automatic control will include a meter located on the outlet side of the water softener. The meter will be directly connected to the cycle time by a cable. An electrically-operated timer will be provided to control the regeneration and to alternate the tank in service. The timer will activate a motor drive which will shift the standby tank to the service position, perform the regeneration functions on the exhausted tank and leave it in the stand by position. The timer will allow individual adjustment for the length of the backwash, brine-rinse, fast rinse, and refill cycles.

A complete set of instructions covering the installation and operation of the softener shall be provided in booklet form. All components parts shall be easily identified by individual part numbers.

Start-up service by factory an authorized representative shall be provided.

PART 3 EXECUTION

3.1 GENERAL INSTALLATION REQUIREMENTS

Hubless cast-iron pipe shall not be installed under concrete floor slabs. Piping located in air plenums shall conform to NFPA 90A requirements. Unprotected plastic pipe shall not be installed in air plenum. Piping located in shafts that constitute air ducts or that enclose air ducts shall be noncombustible in accordance with NFPA 90A. Installation of plastic pipe where in compliance with NFPA may be installed in accordance with PPFA-01. The plumbing system shall be installed complete with necessary fixtures, fittings, traps, valves, and accessories. Water and drainage piping shall be extended 1.5 m outside the building, unless otherwise indicated. A gate valve and drain shall be installed on the water service line inside the building approximately 150 mm above the floor from point of entry. Piping shall be connected to the exterior service lines or capped or plugged if the exterior service is not in place. Sewer and water pipes shall be laid in separate trenches, except when otherwise shown. Exterior underground utilities shall be at least 300 mm below the average local frost depth or as indicated on the drawings. If trenches are closed or the pipes are otherwise covered before being connected to the service lines, the location of the end of each plumbing utility shall be marked with a stake or other acceptable means. Valves shall be installed with control no lower than the valve body.

3.1.1 Water Pipe, Fittings, and Connections

3.1.1.1 Utilities

The piping shall be extended to fixtures, outlets, and equipment. The hot-water and cold-water piping system shall be arranged and installed to permit draining. The supply line to each item of equipment or fixture, except faucets, flush valves, or other control valves which are supplied with integral stops, shall be equipped with a shutoff valve to enable isolation of the item for repair and maintenance without interfering with operation of other equipment or fixtures. Supply piping to fixtures, faucets, hydrants, shower heads, and flushing devices shall be anchored to prevent movement.

3.1.1.2 Cutting and Repairing

The work shall be carefully laid out in advance, and unnecessary cutting of construction shall be avoided. Damage to building, piping, wiring, or equipment as a result of cutting shall be repaired by mechanics skilled in the trade involved.

3.1.1.3 Protection of Fixtures, Materials, and Equipment

Pipe openings shall be closed with caps or plugs during installation. Fixtures and equipment shall be tightly covered and protected against dirt, water, chemicals, and mechanical injury. Upon completion of the work, the

fixtures, materials, and equipment shall be thoroughly cleaned, adjusted, and operated. Safety guards shall be provided for exposed rotating equipment.

3.1.1.4 Mains, Branches, and Runouts

Piping shall be installed as indicated. Pipe shall be accurately cut and worked into place without springing or forcing. Structural portions of the building shall not be weakened. Aboveground piping shall run parallel with the lines of the building, unless otherwise indicated. Branch pipes from service lines may be taken from top, bottom, or side of main, using crossover fittings required by structural or installation conditions. Supply pipes, valves, and fittings shall be kept a sufficient distance from other work and other services to permit not less than 15 mm between finished covering on the different services. Bare and insulated water lines shall not bear directly against building structural elements so as to transmit sound to the structure or to prevent flexible movement of the lines. Water pipe shall not be buried in or under floors unless specifically indicated or approved. Changes in pipe sizes shall be made with reducing fittings. Use of bushings will not be permitted except for use in situations in which standard factory fabricated components are furnished to accommodate specific excepted installation practice. Change in direction shall be made with fittings, except that bending of pipe 100 mm and smaller will be permitted, provided a pipe bender is used and wide sweep bends are formed. The center-line radius of bends shall be not less than six diameters of the pipe. Bent pipe showing kinks, wrinkles, flattening, or other malformations will not be acceptable.

3.1.1.5 Pipe Drains

Pipe drains indicated shall consist of 20 mm hose bibb with renewable seat and full port ball valve ahead of hose bibb. At other low points, 20 mm brass plugs or caps shall be provided. Disconnection of the supply piping at the fixture is an acceptable drain.

3.1.1.6 Expansion and Contraction of Piping

Allowance shall be made throughout for expansion and contraction of water pipe. Each hot-water and hot-water circulation riser shall have expansion loops or other provisions such as offsets, changes in direction, etc., where indicated and/or required. Risers shall be securely anchored as required or where indicated to force expansion to loops. Branch connections from risers shall be made with ample swing or offset to avoid undue strain on fittings or short pipe lengths. Horizontal runs of pipe over 15 m in length shall be anchored to the wall or the supporting construction about midway on the run to force expansion, evenly divided, toward the ends. Sufficient flexibility shall be provided on branch runouts from mains and risers to provide for expansion and contraction of piping. Flexibility shall be provided by installing one or more turns in the line so that piping will spring enough to allow for expansion without straining. If mechanical grooved pipe coupling systems are provided, the deviation from design requirements for expansion and contraction may be allowed pending approval of Contracting Officer.

3.1.1.7 Commercial-Type Water Hammer Arresters

Commercial-type water hammer arresters shall be provided on hot- and cold-water supplies and shall be located as generally indicated, with precise location and sizing to be in accordance with PDI WH 201. Water hammer arresters, where concealed, shall be accessible by means of access doors or removable panels. Commercial-type water hammer arresters shall conform to PDI WH 201. Vertical capped pipe columns will not be permitted.

3.1.2 Joints

Installation of pipe and fittings shall be made in accordance with the manufacturer's recommendations. Mitering of joints for elbows and notching of straight runs of pipe for tees will not be permitted. Joints shall be made up with fittings of compatible material and made for the specific purpose intended.

3.1.2.1 Threaded

Threaded joints shall have American Standard taper pipe threads conforming to ASME B1.20.1. Only male pipe threads shall be coated with graphite or with an approved graphite compound, or with an inert filler and oil, or shall have a polytetrafluoroethylene tape applied.

3.1.2.2 Union and Flanged

Unions, flanges and mechanical couplings shall not be concealed in walls, ceilings, or partitions. Unions shall be used on pipe sizes 65 mm and smaller; flanges shall be used on pipe sizes 80 mm and larger.

3.1.2.3 Cast Iron Soil, Waste and Vent Pipe

Bell and spigot compression and hubless gasketed clamp joints for soil, waste and vent piping shall be installed per the manufacturer's recommendations.

3.1.2.4 Copper Tube and Pipe

The tube or fittings shall not be annealed when making connections. Connections shall be made with a multiflame torch.

a. Brazed. Brazed joints shall be made in conformance with AWS B2.2, MSS SP-73, and CDA-02 with flux and are acceptable for line sizes. Copper to copper joints shall include the use of copper-phosphorus or copper-phosphorus-silver brazing metal without flux. Brazing of dissimilar metals (copper to bronze or brass) shall include the use of flux with either a copper-phosphorus, copper-phosphorus-silver or a silver brazing filler metal.

b. Soldered. Soldered joints shall be made with flux and are only acceptable for lines 50 mm and smaller. Soldered joints shall conform to ASME B31.5 and CDA-02.

c. Copper Tube Extracted Joint. An extracted mechanical joint may be made in copper tube. Joint shall be produced with an appropriate tool by drilling a pilot hole and drawing out the tube surface to form a collar having a minimum height of three times the thickness of the tube wall. To prevent the branch tube from being inserted beyond the depth of the extracted joint, dimpled depth stops shall

be provided. Branch tube shall be notched for proper penetration into fitting to ensure a free flow joint. Extracted joints shall be brazed in accordance with NAPHCC-01 using B-Cup series filler metal in accordance with MSS SP-73. Soldered extracted joints will not be permitted.

3.1.2.5 Other Joint Methods

3.1.3 Dissimilar Pipe Materials

Connections between ferrous and non-ferrous copper pipe shall be made with dielectric unions or flange waterways. Connecting joints between plastic and metallic pipe shall be made with transition fitting for the specific purpose.

3.1.4 Corrosion Protection for Buried Pipe and Fittings

3.1.4.1 Cast Iron and Ductile Iron

Pressure pipe shall have protective coating, a cathodic protection system, and joint bonding. Pipe, fittings, and joints shall have a protective coating. The protective coating shall be completely encasing polyethylene tube or sheet in accordance with AWWA C105. Joints and fittings shall be cleaned, coated with primer, and wrapped with tape. The pipe shall be cleaned, coated, and wrapped prior to pipe tightness testing. Joints and fittings shall be cleaned, coated, and wrapped after pipe tightness testing. Tape shall conform to AWWA C203 and shall be applied with a 50 percent overlap. Primer shall be as recommended by the tape manufacturer.

3.1.5 Pipe Sleeves and Flashing

Pipe sleeves shall be furnished and set in their proper and permanent location.

3.1.5.1 Sleeve Requirements

Pipes passing through concrete or masonry walls or concrete floors or roofs shall be provided with pipe sleeves fitted into place at the time of construction. Sleeves are not required for cast-iron soil pipe passing through concrete slab on grade, except where penetrating a membrane waterproof floor. A modular mechanical type sealing assembly may be installed in lieu of a waterproofing clamping flange and caulking and sealing of annular space between pipe and sleeve. The seals shall consist of interlocking synthetic rubber links shaped to continuously fill the annular space between the pipe and sleeve with corrosion-protected carbon steel bolts, nuts, and pressure plates. The links shall be loosely assembled with bolts to form a continuous rubber belt around the pipe with a pressure plate under each bolt head and each nut. After the seal assembly is properly positioned in the sleeve, tightening of the bolt shall cause the rubber sealing elements to expand and provide a watertight seal between the pipe and the sleeve. Each seal assembly shall be sized as recommended by the manufacturer to fit the pipe and sleeve involved. Sleeves shall not be installed in structural members, except where indicated or approved. Rectangular and square openings shall be as detailed. Each sleeve shall extend through its respective floor, or roof, and shall be cut flush with each surface, except for special circumstances. Pipe sleeves passing through floors in wet areas such as mechanical equipment rooms, lavatories,

kitchens, and other plumbing fixture areas shall extend a minimum of 100 mm above the finished floor. Unless otherwise indicated, sleeves shall be of a size to provide a minimum of 6 mm clearance between bare pipe and inside of sleeve or between jacket over insulation and sleeves. Sleeves in bearing walls shall be steel pipe or cast-iron pipe. Sleeves for membrane waterproof floors shall be steel pipe, cast-iron pipe, or plastic pipe. Membrane clamping devices shall be provided on pipe sleeves for waterproof floors. Sleeves in nonbearing walls or ceilings may be steel pipe, cast-iron pipe, galvanized sheet metal with lock-type longitudinal seam, or moisture-resistant fiber or plastic. Plastic sleeves shall not be used in nonbearing fire walls, roofs, or floor/ceilings. Except as otherwise specified, the annular space between pipe and sleeve, or between jacket over insulation and sleeve, shall be sealed as indicated with sealants conforming to ASTM C 920 and with a primer, backstop material and surface preparation as specified in Section 07920 JOINT SEALING. Pipes passing through sleeves in concrete floors over crawl spaces shall be sealed as specified above. The annular space between pipe and sleeve or between jacket over insulation and sleeve shall not be sealed for interior walls which are not designated as fire rated. Sleeves through below-grade walls in contact with earth shall be recessed 15 mm from wall surfaces on both sides. Annular space between pipe and sleeve shall be filled with backing material and sealants in the joint between the pipe and masonry wall as specified above. Sealant selected for the earth side of the wall shall be compatible with dampproofing/waterproofing materials that are to be applied over the joint sealant.

3.1.5.2 Flashing Requirements

Pipes passing through roof or floor waterproofing membrane shall be installed through a 4.9 kg per square meter copper flashing, each within an integral skirt or flange. Flashing shall be suitably formed, and the skirt or flange shall extend not less than 200 mm from the pipe and shall be set over the roof or floor membrane in a solid coating of bituminous cement. The flashing shall extend up the pipe a minimum of 250 mm. For cleanouts, the flashing shall be turned down into the hub and caulked after placing the ferrule. Pipes passing through pitched roofs shall be flashed, using lead or copper flashing, with an adjustable integral flange of adequate size to extend not less than 200 mm from the pipe in all directions and lapped into the roofing to provide a watertight seal. The annular space between the flashing and the bare pipe or between the flashing and the metal-jacket-covered insulation shall be sealed as indicated. Flashing for dry vents shall be turned down into the pipe to form a waterproof joint. Pipes, up to and including 250 mm in diameter, passing through roof or floor waterproofing membrane may be installed through a cast-iron sleeve with caulking recess, anchor lugs, flashing-clamp device, and pressure ring with brass bolts. Flashing shield shall be fitted into the sleeve clamping device. Pipes passing through wall waterproofing membrane shall be sleeved as described above. A waterproofing clamping flange shall be installed.

3.1.5.3 Pipe Penetrations of Slab on Grade Floors

Where pipes, fixture drains, floor drains, cleanouts or similar items penetrate slab on grade floors, except at penetrations of floors with waterproofing membrane as specified in paragraphs Flashing Requirements and Waterproofing, a groove 6 to 13 mm wide by 6 to 10 mm deep shall be formed around the pipe, fitting or drain. The groove shall be filled with a sealant as specified in Section 07920 JOINT SEALING.

3.1.6 Fire Seal

Where pipes pass through fire walls, fire-partitions, fire-rated pipe chase walls or floors above grade, a fire seal shall be provided as specified in Section 07270 FIRESTOPPING.

3.1.7 Supports

3.1.7.1 General

Hangers used to support piping 50 mm and larger shall be fabricated to permit adequate adjustment after erection while still supporting the load. Pipe guides and anchors shall be installed to keep pipes in accurate alignment, to direct the expansion movement, and to prevent buckling, swaying, and undue strain. Piping subjected to vertical movement when operating temperatures exceed ambient temperatures shall be supported by variable spring hangers and supports or by constant support hangers. In the support of multiple pipe runs on a common base member, a clip or clamp shall be used where each pipe crosses the base support member. Spacing of the base support members shall not exceed the hanger and support spacing required for an individual pipe in the multiple pipe run.

3.1.7.2 Pipe Supports and Structural Bracing, Seismic Requirements

Piping and attached valves shall be supported and braced to resist seismic loads as specified Section 13080 SEISMIC PROTECTION FOR ARCHITECTURAL, MECHANICAL AND ELECTRICAL SYSTEMS AND EQUIPMENT (ZONE 3). Structural steel required for reinforcement to properly support piping, headers, and equipment, but not shown, shall be provided. Material used for supports shall be as specified in Section 05120 STRUCTURAL STEEL.

3.1.7.3 Pipe Hangers, Inserts, and Supports

Installation of pipe hangers, inserts and supports shall conform to MSS SP-58 and MSS SP-69, except as modified herein.

a. Types 5, 12, and 26 shall not be used.

b. Type 3 shall not be used on insulated pipe.

c. Type 18 inserts shall be secured to concrete forms before concrete is placed. Continuous inserts which allow more adjustment may be used if they otherwise meet the requirements for type 18 inserts.

d. Type 19 and 23 C-clamps shall be torqued per MSS SP-69 and shall have both locknuts and retaining devices furnished by the manufacturer. Field-fabricated C-clamp bodies or retaining devices are not acceptable.

e. Type 20 attachments used on angles and channels shall be furnished with an added malleable-iron heel plate or adapter.

f. Type 24 may be used only on trapeze hanger systems or on fabricated frames.

g. Type 39 saddles shall be used on insulated pipe 100 mm (4 inches) and larger when the temperature of the medium is 15 degrees C or higher. Type 39 saddles shall be welded to the pipe.

h. Type 40 shields shall:

(1) Be used on insulated pipe less than 100 mm.

(2) Be used on insulated pipe 100 mm and larger when the temperature of the medium is 15 degrees C or less.

(3) Have a high density insert for pipe 50 mm and larger and for smaller pipe sizes when the insulation is suspected of being visibly compressed, or distorted at or near the shield/insulation interface. High density inserts shall have a density of 128 kg per cubic meter (8 pcf) or greater.

i. Horizontal pipe supports shall be spaced as specified in MSS SP-69 and a support shall be installed not over 300 mm from the pipe fitting joint at each change in direction of the piping. Pipe supports shall be spaced not over 1.5 m apart at valves. Operating temperatures in determining hanger spacing for PVC or CPVC pipe shall be 49 degrees C for PVC and 82 degrees C for CPVC. Horizontal pipe runs shall include allowances for expansion and contraction.

j. Vertical pipe shall be supported at each floor, except at slab-on-grade, at intervals of not more than 4.5 m nor more than 2 m from end of risers, and at vent terminations. Vertical pipe risers shall include allowances for expansion and contraction.

k. Type 40 shields used on insulated pipe shall have high density inserts with a density of 128 kg per cubic meter or greater.

l. Type 35 guides using steel, reinforced polytetrafluoroethylene (PTFE) or graphite slides shall be provided to allow longitudinal pipe movement. Slide materials shall be suitable for the system operating temperatures, atmospheric conditions, and bearing loads encountered. Lateral restraints shall be provided as needed. Where steel slides do not require provisions for lateral restraint the following may be used:

(1) On pipe 100 mm and larger when the temperature of the medium is 15 degrees C or higher, a Type 39 saddle, welded to the pipe, may freely rest on a steel plate.

(2) On pipe less than 100 mm a Type 40 shield, attached to the pipe or insulation, may freely rest on a steel plate.

(3) On pipe 100 mm and larger carrying medium less that 15 degrees C a Type 40 shield, attached to the pipe or insulation, may freely rest on a steel plate.

m. Pipe hangers on horizontal insulated pipe shall be the size of the outside diameter of the insulation. The insulation shall be continuous through the hanger on all pipe sizes and applications.

n. Where there are high system temperatures and welding to piping is not desirable, the type 35 guide shall include a pipe cradle, welded to the guide structure and strapped securely to the pipe. The pipe shall be separated from the slide material by at least 100 mm or by an amount adequate for the insulation, whichever is greater.

o. Hangers and supports for plastic pipe shall not compress, distort, cut or abrade the piping, and shall allow free movement of pipe except where otherwise required in the control of expansion/contraction.

3.1.8 Welded Installation

Plumbing pipe weldments shall be as indicated. Changes in direction of piping shall be made with welding fittings only; mitering or notching pipe to form elbows and tees or other similar type construction will not be permitted. Branch connection may be made with either welding tees or forged branch outlet fittings. Branch outlet fittings shall be forged, flared for improvement of flow where attached to the run, and reinforced against external strains. Beveling, alignment, heat treatment, and inspection of weld shall conform to ASME B31.1. Weld defects shall be removed and repairs made to the weld, or the weld joints shall be entirely removed and rewelded. After filler metal has been removed from its original package, it shall be protected or stored so that its characteristics or welding properties are not affected. Electrodes that have been wetted or that have lost any of their coating shall not be used.

3.1.9 Pipe Cleanouts

Pipe cleanouts shall be the same size as the pipe except that cleanout plugs larger than 100 mm will not be required. A cleanout installed in connection with cast-iron soil pipe shall consist of a long-sweep 1/4 bend or one or two 1/8 bends extended to the place shown. An extra-heavy cast-brass or cast-iron ferrule with countersunk cast-brass head screw plug shall be caulked into the hub of the fitting and shall be flush with the floor. Cleanouts in connection with other pipe, where indicated, shall be T-pattern, 90-degree branch drainage fittings with cast-brass screw plugs, except plastic plugs shall be installed in plastic pipe. Plugs shall be the same size as the pipe up to and including 100 mm. Cleanout tee branches with screw plug shall be installed at the foot of soil and waste stacks, at the foot of interior downspouts, on each connection to building storm drain where interior downspouts are indicated, and on each building drain outside the building. Cleanout tee branches may be omitted on stacks in single story buildings with slab-on-grade construction or where less than 450 mm of crawl space is provided under the floor. Cleanouts on pipe concealed in partitions shall be provided with chromium plated bronze, nickel bronze, nickel brass or stainless steel flush type access cover plates. Round access covers shall be provided and secured to plugs with securing screw. Square access covers may be provided with matching frames, anchoring lugs and cover screws. Cleanouts in finished walls shall have access covers and frames installed flush with the finished wall. Cleanouts installed in finished floors subject to foot traffic shall be provided with a chrome-plated cast brass, nickel brass, or nickel bronze cover secured to the plug or cover frame and set flush with the finished floor. Heads of fastening screws shall not project above the cover surface. Where cleanouts are provided with adjustable heads, the heads shall be cast iron.

3.2 WATER HEATERS AND HOT WATER STORAGE TANKS

3.2.1 Relief Valves

No valves shall be installed between a relief valve and its water heater or storage tank. The P&T relief valve shall be installed where the valve actuator comes in contact with the hottest water in the heater. Whenever possible, the relief valve shall be installed directly in a tapping in the tank or heater; otherwise, the P&T valve shall be installed in the hot-water outlet piping. A vacuum relief valve shall be provided on the cold water supply line to the hot-water storage tank or water heater and mounted above and within 150 mm above the top of the tank or water heater.

3.2.2 Installation of Gas-Fired Water Heater

Installation shall conform to NFPA 54 for gas fired and NFPA 31 for oil fired. Storage water heaters that are not equipped with integral heat traps and having vertical pipe risers shall be installed with heat traps directly on both the inlet and outlet. Circulating systems need not have heat traps installed. An acceptable heat trap may be a piping arrangement such as elbows connected so that the inlet and outlet piping make vertically upward runs of not less than 600 mm just before turning downward or directly horizontal into the water heater's inlet and outlet fittings. Commercially available heat traps, specifically designed by the manufacturer for the purpose of effectively restricting the natural tendency of hot water to rise through vertical inlet and outlet piping during standby periods may also be approved.

3.2.3 Heat Traps

Piping to and from each water heater and hot water storage tank shall be routed horizontally and downward a minimum of 600 mm before turning in an upward direction.

3.2.4 Connections to Water Heaters

Connections of metallic pipe to water heaters shall be made with dielectric unions or flanges.

3.3 FIXTURES AND FIXTURE TRIMMINGS

Angle stops, straight stops, stops integral with the faucets, or concealed type of lock-shield, and loose-key pattern stops for supplies with threaded, sweat or solvent weld inlets shall be furnished and installed with fixtures. Where connections between copper tubing and faucets are made by rubber compression fittings, a beading tool shall be used to mechanically deform the tubing above the compression fitting. Exposed traps and supply pipes for fixtures and equipment shall be connected to the rough piping systems at the wall, unless otherwise specified under the item. Floor and wall escutcheons shall be as specified. Drain lines and hot water lines of fixtures for handicapped personnel shall be insulated and do not require polished chrome finish. Plumbing fixtures and accessories shall be installed within the space shown.

3.3.1 Fixture Connections

Where space limitations prohibit standard fittings in conjunction with the cast-iron floor flange, special short-radius fittings shall be provided. Connections between earthenware fixtures and flanges on soil pipe shall be made gastight and watertight with a closet-setting compound or neoprene gasket and seal. Use of natural rubber gaskets or putty will not be permitted. Fixtures with outlet flanges shall be set the proper distance from floor or wall to make a first-class joint with the closet-setting compound or gasket and fixture used.

3.3.2 Flushometer Valves

Flushometer valves shall be secured to prevent movement by anchoring the long finished top spud connecting tube to wall adjacent to valve with approved metal bracket. Flushometer valves for water closets shall be installed 1 m above the floor.

3.3.3 Height of Fixture Rims Above Floor

Lavatories shall be mounted with rim 775 mm above finished floor. Wall-hung drinking fountains and water coolers shall be installed with rim 1020 mm above floor. Wall-hung service sinks shall be mounted with rim 700 mm above the floor. Installation of fixtures for use by the physically handicapped shall be in accordance with CABO A117.1.

3.3.4 Shower Bath Outfits

The area around the water supply piping to the mixing valves and behind the escutcheon plate shall be made watertight by caulking or gasketing.

3.3.5 Fixture Supports

Fixture supports for off-the-floor lavatories, urinals, water closets, and other fixtures of similar size, design, and use, shall be of the chair-carrier type. The carrier shall provide the necessary means of mounting the fixture, with a foot or feet to anchor the assembly to the floor slab. Adjustability shall be provided to locate the fixture at the desired height and in proper relation to the wall. Support plates, in lieu of chair carrier, shall be fastened to the wall structure only where it is not possible to anchor a floor-mounted chair carrier to the floor slab.

3.3.5.1 Support for Solid Masonry Construction

Chair carrier shall be anchored to the floor slab. Where a floor-anchored chair carrier cannot be used, a suitable wall plate shall be imbedded in the masonry wall.

3.3.5.2 Support for Cellular-Masonry Wall Construction

Chair carrier shall be anchored to floor slab. Where a floor-anchored chair carrier cannot be used, a suitable wall plate shall be fastened to the cellular wall using through bolts and a back-up plate.

3.3.5.3 Support for Steel Stud Frame Partitions

Chair carrier shall be used. The anchor feet and tubular uprights shall be of the heavy duty design; and feet (bases) shall be steel and welded to a square or rectangular steel tube upright. Wall plates, in lieu of floor-anchored chair carriers, shall be used only if adjoining steel partition studs are suitably reinforced to support a wall plate bolted to these studs.

3.3.5.4 Support for Wood Stud Construction

Where floor is a concrete slab, a floor-anchored chair carrier shall be used. Where entire construction is wood, wood crosspieces shall be installed. Fixture hanger plates, supports, brackets, or mounting lugs shall be fastened with not less than No. 10 wood screws, 6 mm thick minimum steel hanger, or toggle bolts with nut. The wood crosspieces shall extend the full width of the fixture and shall be securely supported.

3.3.5.5 Wall-Mounted Water Closet Gaskets

Where wall-mounted water closets are provided, reinforced wax, treated felt, or neoprene gaskets shall be provided. The type of gasket furnished shall be as recommended by the chair-carrier manufacturer.

3.3.6 Backflow Prevention Devices

Plumbing fixtures, equipment, and pipe connections shall not cross connect or interconnect between a potable water supply and any source of nonpotable water. Backflow preventers shall be installed where indicated and in accordance with NAPHCC-01 at all other locations necessary to preclude a cross-connect or interconnect between a potable water supply and any nonpotable substance. In addition backflow preventers shall be installed at all locations where the potable water outlet is below the flood level of the equipment, or where the potable water outlet will be located below the level of the nonpotable substance. Backflow preventers shall be located so that no part of the device will be submerged. Backflow preventers shall be of sufficient size to allow unrestricted flow of water to the equipment, and preclude the backflow of any nonpotable substance into the potable water system. Access shall be provided for maintenance and testing. Each device shall be a standard commercial unit.

3.3.7 Access Panels

Access panels shall be provided for concealed valves and controls, or any item requiring inspection or maintenance. Access panels shall be of sufficient size and located so that the concealed items may be serviced, maintained, or replaced. Access panels shall be as specified in Section 05500 MISCELLANEOUS METAL.

3.3.8 Traps

Each trap shall be placed as near the fixture as possible, and no fixture shall be double-trapped. Traps installed on cast-iron soil pipe shall be cast iron. Traps installed on steel pipe or copper tubing shall be recess-drainage pattern, or brass-tube type. Traps installed on plastic pipe may be plastic conforming to ASTM D 3311. Traps for acid-resisting waste shall be of the same material as the pipe.

3.3.9 Shower Pans

Before installing shower pan, subfloor shall be free of projections such as nail heads or rough edges of aggregate. Drain shall be a bolt-down, clamping-ring type with weepholes, installed so the lip of the subdrain is flush with subfloor.

3.3.9.1 General

The floor of each individual shower, the shower-area portion of combination shower and drying room, and the entire shower and drying room where the two are not separated by curb or partition, shall be made watertight with a shower pan fabricated in place. The shower pan material shall be cut to size and shape of the area indicated, in one piece to the maximum extent practicable, allowing a minimum of 150 mm for turnup on walls or partitions, and shall be folded over the curb with an approximate return of 1/4 of curb height. The upstands shall be placed behind any wall or partition finish. Subflooring shall be smooth and clean, with nailheads driven flush with surface, and shall be sloped to drain. Shower pans shall be clamped to drains with the drain clamping ring.

3.3.9.2 Metal Shower Pans

When a shower pan of required size cannot be furnished in one piece, metal pieces shall be joined with a flatlock seam and soldered or burned. The corners shall be folded, not cut, and the corner seam shall be soldered or burned. Pans, including upstands, shall be coated on all surfaces with one brush coat of asphalt. Asphalt shall be applied evenly at not less than 1 liter per square meter. A layer of felt covered with building paper shall be placed between shower pans and wood floors. The joining surfaces of metal pan and drain shall be given a brush coat of asphalt after the pan is connected to the drain.

3.3.9.3 Nonplasticized Chlorinated Polyethylene Shower Pans

Corners of nonplasticized chlorinated polyethylene shower pans shall be folded against the upstand by making a pig-ear fold. Hot-air gun or heat lamp shall be used in making corner folds. Each pig-ear corner fold shall be nailed or stapled 15 mm from the upper edge to hold it in place. Nails shall be galvanized large-head roofing nails. On metal framing or studs, approved duct tape shall be used to secure pig-ear fold and membrane. Where no backing is provided between the studs, the membrane slack shall be taken up by pleating and stapling or nailing to studding 15 mm from upper edge. To adhere the membrane to vertical surfaces, the back of the membrane and the surface to which it will be applied shall be coated with adhesive that becomes dry to the touch in 5 to 10 minutes, after which the membrane shall be pressed into place. Surfaces to be solvent-welded shall be clean. Surfaces to be joined with xylene shall be initially sprayed and vigorously cleaned with a cotton cloth, followed by final coating of xylene and the joining of the surfaces by roller or equivalent means. If ambient or membrane temperatures are below 4 degrees C the membrane and the joint shall be heated prior to application of xylene. Heat may be applied with hot-air gun or heat lamp, taking precautions not to scorch the membrane. Adequate ventilation and wearing of gloves are required when working with xylene. Membrane shall be pressed into position on the drain body, and shall be cut and fit to match so that membrane can be properly clamped and an effective gasket-type seal provided. On wood subflooring, two layers of 0.73 kg per

square meter dry felt shall be installed prior to installation of shower pan to ensure a smooth surface for installation.

3.3.9.4 Nonplasticized Polyvinyl Chloride (PVC) Shower Pans

Nonplasticized PVC shall be turned up behind walls or wall surfaces a distance of not less than 150 mm in room areas and 75 mm above curb level in curbed spaces with sufficient material to fold over and fasten to outside face of curb. Corners shall be pig-ear type and folded between pan and studs. Only top 25 mm of upstand shall be nailed to hold in place. Nails shall be galvanized large-head roofing type. Approved duct tape shall be used on metal framing or studs to secure pig-ear fold and membrane. Where no backing is provided between studs, the membrane slack shall be taken up by pleating and stapling or nailing to studding at top inch of upstand. To adhere the membrane to vertical surfaces, the back of the membrane and the surface to which it is to be applied shall be coated with adhesive that becomes dry to the touch in 5 to 10 minutes, after which the membrane shall be pressed into place. Trim for drain shall be exactly the size of drain opening. Bolt holes shall be pierced to accommodate bolts with a tight fit. Adhesive shall be used between pan and subdrain. Clamping ring shall be bolted firmly. A small amount of gravel or porous materials shall be placed at weepholes so that holes remain clear when setting bed is poured. Membrane shall be solvent welded with PVC solvent cement. Surfaces to be solvent welded shall be clean (free of grease and grime). Sheets shall be laid on a flat surface with an overlap of about 50 mm. Top edge shall be folded back and surface primed with a PVC primer. PVC cement shall be applied and surfaces immediately placed together, while still wet. Joint shall be lightly rolled with a paint roller, then as the joint sets shall be rolled firmly but not so hard as to distort the material. In long lengths, about 600 or 900 mm at a time shall be welded. On wood subflooring, two layers of 0.73 kg per square meter felt shall be installed prior to installation of shower pan to ensure a smooth surface installation.

3.4 VIBRATION-ABSORBING FEATURES

Mechanical equipment, including compressors and pumps, shall be isolated from the building structure by approved vibration-absorbing features, unless otherwise shown. Each foundation shall include an adequate number of standard isolation units. Each unit shall consist of machine and floor or foundation fastening, together with intermediate isolation material, and shall be a standard product with printed load rating. Piping connected to mechanical equipment shall be provided with flexible connectors.

3.5 IDENTIFICATION SYSTEMS

3.5.1 Identification Tags

Identification tags made of brass, engraved laminated plastic, or engraved anodized aluminum, indicating service and valve number shall be installed on valves, except those valves installed on supplies at plumbing fixtures. Tags shall be 35 mm minimum diameter, and marking shall be stamped or engraved. Indentations shall be black, for reading clarity. Tags shall be attached to valves with No. 12 AWG, copper wire, chrome-plated beaded chain, or plastic straps designed for that purpose.

3.6 ESCUTCHEONS

Escutcheons shall be provided at finished surfaces where bare or insulated piping, exposed to view, passes through floors, walls, or ceilings, except in boiler, utility, or equipment rooms. Escutcheons shall be fastened securely to pipe or pipe covering and shall be satin-finish, corrosion-resisting steel, polished chromium-plated zinc alloy, or polished chromium-plated copper alloy. Escutcheons shall be either one-piece or split-pattern, held in place by internal spring tension or setscrew.

3.7 PAINTING

Painting of pipes, hangers, supports, and other iron work, either in concealed spaces or exposed spaces, is specified in Section 09900PAINTING, GENERAL.

3.8 TESTS FLUSHING AND STERILIZATION

3.8.1 Plumbing System

The plumbing system shall be tested in accordance with NAPHCC-01.

3.8.1.1 Test of Backflow Prevention Assemblies

Backflow prevention assembly shall be tested using gauges specifically designed for the testing of backflow prevention assemblies. Gauges shall be tested annually for accuracy in accordance with the University of Southern California's Foundation of Cross Connection Control and Hydraulic Research or the American Water Works Association Manual of Cross Connection (Manual M-14). Report form for each assembly shall include, as a minimum, the following:

Data on Device	Data on Testing Firm
Type of Assembly	Name
Manufacturer	Address
Model Number	Certified Tester
Serial Number	Certified Tester No.
Size	Date of Test
Location	
Test Pressure Readings	Serial Number and Test Data of Gauges

If the unit fails to meet specified requirements, the unit shall be repaired and retested.

3.8.1.2 Shower Pans

After installation of the pan and finished floor, the drain shall be temporarily plugged below the weep holes. The floor area shall be flooded with water to a minimum depth of 25 mm for a period of 24 hours. Any drop in the water level during test, except for evaporation, will be reason for rejection, repair, and retest.

3.8.2 Defective Work

If inspection or test shows defects, such defective work or material shall be replaced or repaired as necessary and inspection and tests shall be

repeated. Repairs to piping shall be made with new materials. Caulking of screwed joints or holes will not be permitted.

3.8.3 System Flushing

After tests are completed, potable water piping shall be flushed. In general, sufficient water shall be used to produce a minimum water velocity of 0.762 meters per second through piping being flushed. Flushing shall be continued until discharge water shows no discoloration. System shall be drained at low points. Strainer screens shall be removed, cleaned, and replaced in line. After flushing and cleaning, systems shall be prepared for service by immediately filling water piping with clean, fresh potable water. Any stoppage, discoloration, or other damage to the finish, furnishings, or parts of the building due to the Contractor's failure to properly clean the piping system shall be repaired by the Contractor. When the work is complete, the hot-water system shall be adjusted for uniform circulation. Flushing devices and automatic control systems shall be adjusted for proper operation.

3.8.4 Operational Test

Upon completion of and prior to acceptance of the installation, the Contractor shall subject the plumbing system to operating tests to demonstrate satisfactory functional and operational efficiency. Such operating tests shall cover a period of not less than 8 hours for each system and shall include the following information in a report with conclusion as to the adequacy of the system:

a. Time, date, and duration of test.

b. Water pressures at the most remote and the highest fixtures.

c. Operation of each fixture and fixture trim.

d. Operation of each valve, hydrant, and faucet.

e. Pump suction and discharge pressures.

f. Temperature of each domestic hot-water supply.

g. Operation of each floor drain by flooding with water.

h. Operation of each vacuum breaker and backflow preventer.

3.8.5 Disinfection

After pressure tests have been made, the entire domestic hot- and cold-water distribution system shall be sterilized. System shall be thoroughly flushed with water of sufficient velocity until all entrained dirt and other foreign material have been removed, before introducing chlorinating material. The chlorinating material shall be hypochlorites or liquid chlorine. Water chlorination procedure shall be in accordance with AWWA M20. The chlorinating material shall be fed into the water piping system at a constant rate at a concentration of at least 50 parts per million (ppm). A properly adjusted hypochlorite solution injected into the main with a hypochlorinator, or liquid chlorine injected into the main through a solution-feed chlorinator and booster pump, shall be used. The chlorine

residual shall be checked at intervals to ensure that the proper level is maintained. Chlorine application shall continue until the entire main is filled. The water shall remain in the system for a minimum of 24 hours. Each valve in the system being sterilized shall be opened and closed several times during the contact period to ensure its proper disinfection. Following the 24-hour period, no less than 25 ppm chlorine residual shall remain in the system. Water tanks shall be disinfected by the addition of chlorine directly to the filling water. Following a 6 hour period, no less than 50 ppm chlorine residual shall remain in the tank. The system including the tanks shall then be flushed with clean water until the residual chlorine is reduced to less than one part per million. During the flushing period each valve and faucet shall be opened and closed several times. From several points in the system the Contracting Officer will take samples of water in properly sterilized containers for bacterial examination. The samples of water shall be tested for total coliform organisms (coliform bacteria, fecal coliform, streptococcal, and other bacteria) in accordance with AWWA-01. The testing method used shall be either the multiple-tube fermentation technique or the membrane-filter technique. The sterilizing shall be repeated until tests indicate the absence of coliform organisms (zero mean coliform density per 100 milliliters) in the samples for at least 2 full days. The system will not be accepted until satisfactory bacteriological results have been obtained.

3.9 PLUMBING FIXTURE SCHEDULE

P-1 WATER CLOSET:

Siphon-jet, elongated bowl, top supply spud, ASME A112.19.2M, floor mounted. Floor flange shall be copper alloy, cast iron, or plastic.

Gasket shall be wax type.

Seat - CID A-A-238, Type A, white plastic, elongated, open front with concealed hinge check.

Flushometer Valve - ASSE 1037, large diaphragm type with non-hold-open feature, backcheck angle control stop, and vacuum breaker. Minimum upper chamber inside diameter of not less than 66.7 mm (2-5/8 inches) at the point where the diaphragm is sealed between the upper and lower chambers. The maximum water use shall be 6 liters per flush.

P-2 WATER CLOSET HANDICAPPED:

Top rim of bowl shall be 457 mm above the floor; other features are the same as P-1.

P-3 URINAL:

Wall hanging, with integral trap and extended shields, ASME A112.19.2Msiphon jet. Top supply connection, back outlet.

Flushometer Valve - Similar to Flushometer Valve for P-1. The maximum water use shall be 3.8 liters per flush.

P-4 LAVATORY:

Manufacturer's standard sink depth, vitreous china ASME A112.19.2M, countertop, oval.

Faucet - Faucets shall be single control, mixing type. Faucets shall have metal replaceable cartridge control unit or metal cartridge units with diaphragm which can be replaced without special tools. Valves and handles shall be copper alloy. Connection between valve and spout for center-set faucet shall be of rigid metal tubing. Flow shall be limited to 0.16 liters per second at a flowing pressure of 549 kPa.

Handles - Lever type. Cast, formed, or drop forged copper alloy.

Drain - Pop-up drain shall include stopper, lift rods, jam nut, washer, and tail piece. See paragraph FIXTURES for optional plastic accessories.

P-5 WASH FOUNTAIN

Wash fountain for four users shall be precast terrazzo construction of 85% stone, 15% binder, structurally reinforced, ground, polished and finished with clear epoxy coating. Color shall be white marmorite. Fixture dimensions: 1168 mm wide, 660 mm deep and 1016 mm high. Rim height 864 mm, bottom of rim 749 mm from floor. Preassembled bowl module to consist of receptor with backsplash and sprayhead, equipped with supply manifold, 10 mm type L copper tube, factory pre-piped and tested. Integral sprayhead to be equipped with four front-serviced metering valves with all valve components enclosed in a replaceable cartridge. Non-adjustable metering orifice provides 12 seconds of operation. Each of four spray nozzles to deliver .03 L/S and to be independently controlled by separate push button. Valving to include combination stop, strainer and check valves and thermostatic mixing valve, 15 mm I.P.S. supply inlets. pedestal to consist of stainless steel mounting panel and precast terrazzo side panels. Front access panel of heavy gauge stainless steel to have vandal-resistant closure. Wash fountain to include liquid soap valve mounted in backsplash.

P-7 SINK:

Ledge back with holes for faucet and spout single bowl 609.6 x 533.4 mm stainless steel ASME A112.19.3M.

Faucet and Spout - Cast or wrought copper alloy. Aerator shall have internal threads. Flow shall be limited to 0.16 liters per second at a flowing water pressure of 549 kPa.

Handle - Cast copper alloy, wrought copper alloy, or stainless steel. Single lever type.

Drain Assembly - Plug, cup strainer, crossbars, jam nuts, washers, couplings, stopper, etc. shall be copper alloy or stainless steel.

P-7 MOP SERVICE BASIN:

Molded stone, stainless steel rim guard, FS WW-P-541/5 corner, floor mounted 610 mm square, 200 mm deep.

Faucet and Spout - Cast or wrought copper alloy, with top or bottom brace, with backflow preventer. Faucets shall have replaceable seat and the washer

shall rotate onto the seat. Handles shall be four arm type. Strainers shall have internal threads.

Drain Assembly - Plug, cup strainer, cross bars, jam nuts, washers, couplers, stopper, etc. shall be copper alloy or stainless steel.

P-8 Shower: Shower heads, CID A-A-240 other than emergency showers, shall include a non-removable, tamperproof device to limit water flow to 0.16 liters per second when tested in accordance with ASME A112.18.1M.

Pressure-Balancing mixing valve with single blade lever handle, integral volume control, and adjustable stop screw to limit handle turn, Wall\/hand shower with flexible metal hose, in-line vacuum breaker, wall connection and flange. 762 mm slide bar for hand shower mounting.

ELECTRIC WATER COOLER DRINKING FOUNTAINS:

Water cooler drinking fountains shall be self contained, conform to ARI 1010, use one of the halogenated fluorocarbons as a refrigerant, have a capacity to deliver 30 liters per hour of water at 10 degrees C with an inlet water temperature of 27 degrees C while residing in a room environment of 32 degrees C, and have self-closing valves. Self-closing valves shall have automatic stream regulators, have a flow control capability, have a push button actuation or have a cross-shaped index metal turn handle without a hood. Exposed surfaces of stainless steel shall have No. 4 general polish finish. Spouts shall provide a flow of water at least 100 mm high so as to allow the insertion of a cup or glass under the flow of water.

P-9 SURFACE WALL-MOUNTED:

Surface wall-mounted units shall be 336 mm wide, 330 mm deep, and have a back height of 150 mm to 200 mm. The bowl shall be made of corrosion resisting steel. The unit shall have concealed fasteners and be for interior installation.

P-10 SURFACE WALL-MOUNTED:

Same as P-9, except mounted at handicapped height.

P-11 EMERGENCY EYE WASH:

ANSI Z358.1; wall-mounted, self-cleaning, non-clogging eye wash with quick opening full-flow valves, ABS eye wash receptor, twin eye wash heads stainless steel dust cover, copper alloy control valve and fittings.

3.10 POSTED INSTRUCTIONS

Framed instructions under glass or in laminated plastic, including wiring and control diagrams showing the complete layout of the entire system, shall be posted where directed. Condensed operating instructions explaining preventive maintenance procedures, methods of checking the system for normal safe operation, and procedures for safely starting and stopping the system shall be prepared in typed form, framed as specified above for the wiring and control diagrams and posted beside the diagrams. The framed instructions shall be posted before acceptance testing of the systems.

3.11 PERFORMANCE OF WATER HEATING EQUIPMENT

Standard rating condition terms are as follows:

EF = Energy factor, overall efficiency.

ET = Thermal efficiency with 21 degrees C delta T.

EC = Combustion efficiency, 100 percent - flue loss when smoke = o (trace is permitted).

SL = Standby loss in W/0.093 SE. m. based on 27 degrees C delta T, or in percent per hour based on nominal 38 degrees C delta T.

HL = Heat loss of tank surface area.

V = Storage volume in liters

3.11.1 Storage Water Heaters

3.11.1.1 Gas

a. Storage capacity of 379 liters or less, and input rating of 21980 W or less: minimum EF shall be 0.62-0.0019V per 10 CFR 430.

TABLE I
PIPE AND FITTING MATERIALS FOR
DRAINAGE, WASTE, AND VENT PIPING SYSTEMS

		SERVICE					
Item #	Pipe and Fitting Materials	A	B	C	D	E	F
1	Cast iron soil pipe and fittings, hub and spigot, ASTM A 74 with compression gaskets	X	X	X	X	X	
2	Cast iron pipe and fittings hubless, CISPI 301 and ASTM A 888	X	X	X	X		
3	Cast iron drainage fittings, threaded, ASME B16.12 for use with Item 10			X	X		
4	Cast iron screwed fittings (threaded) ASME B16.4 for use with Item 10				X	X	
5	Grooved pipe couplings, ferrous and non-ferrous pipe ASTM A 536 and ASTM A 47				X	X	
6	Ductile iron grooved joint fittings for ferrous pipe ASTM A 536 and ASTM A 47 for use with Item 5				X	X	
7	Bronze sand casting grooved joint pressure fittings for non-ferrous pipe ASTM B 584, for use with Item 5				X	X	
8	Wrought copper grooved joint pressure pressure fittings for non-ferrous pipe ASTM B 75 C12200, ASTM B 152 C11000, ASME B16.22 ASME B16.22 for use with Item 5						
9	Malleable-iron threaded fittings, galvanized ASME B16.3 for use with Item 10				X	X	
10	Steel pipe, seamless galvanized, ASTM A 53, Type S, Grade B				X	X	
11	Seamless red brass pipe, ASTM B 43			X	X		
12	Bronzed flanged fittings, ASME B16.24 for use with Items 11 and 14				X	X	
13	Cast copper alloy solder joint				X	X	

	pressure fittings, ASME B16.18 for use with Item 14					
14	Seamless copper pipe, ASTM B 42				X	
15	Cast bronze threaded fittings, ASME B16.15				X	X
16	Copper drainage tube, (DWV), ASTM B 306	X*	X	X*	X	X
17	Wrought copper and wrought alloy solder-joint drainage fittings. ASME B16.29	X	X	X	X	X
18	Cast copper alloy solder joint drainage fittings, DWV, ASME B16.23	X	X	X	X	X

SERVICE:

A - Underground Building Soil, Waste and Storm Drain
B - Aboveground Soil, Waste, Drain In Buildings
C - Underground Vent
D - Aboveground Vent
E - Interior Rainwater Conductors Aboveground
F - Corrosive Waste And Vent Above And Belowground
* - Hard Temper

TABLE II
PIPE AND FITTING MATERIALS FOR PRESSURE PIPING SYSTEMS

		SERVICE			
Item No.	Pipe and Fitting Materials	A	B	C	D
1	Malleable-iron threaded fittings, a. Galvanized, ASME B16.3 for use with Item 4a			X	
	b. Same as "a" but not galvanized for use with Item 4b			X	
2	Steel pipe: a. Seamless, galvanized, ASTM A 53, Type S, Grade B				
	b. Seamless, black, ASTM A 53, Type S, Grade B			X	
3	Seamless red brass pipe, ASTM B 43				
4	Bronze flanged fittings, ASME B16.24 for use with Item 4				
5	Seamless copper pipe, ASTM B 42	X	X		X
6	Seamless copper water tube, ASTM B 88	X**	X**	X**	X***
7	Seamless and welded copper distribution tube (Type D) ASTM B 641	X**	X**	X**	X****
8	Cast bronze threaded fittings, ASME B16.15 for use with Items 7.	X	X		X
9	Wrought copper and bronze solder-joint pressure fittings, ASME B16.22 for use with Items 5 and 6	X	X	X	X
10	Cast copper alloy solder-joint pressure fittings, ASME B16.18 for use with Items 5 and 6	X	X	X	X
11	Bronze and sand castings grooved joint pressure fittings for non-ferrous pipe ASTM B 584, for use with Item 2				
12	Steel pipeline flanges, MSS SP-44				

13	Fittings: brass or bronze; ASME B16.15, and ASME B16.18 ASTM B 828	
14	Carbon steel pipe unions, socket-welding and threaded, MSS SP-83	X
15	Malleable-iron threaded pipe unions ASME B16.39	
16	Nipples, pipe threaded ASTM A 733	X

A - Cold Water Aboveground

B - Hot Water 82 degree C Maximum Aboveground

C - Compressed Air Lubricated

D - Cold Water Service Belowground

Indicated types are minimum wall thicknesses.

** - Type L - Hard

*** - Type K - Hard temper with brazed joints only or type K-soft temper without joints in or under floors

**** - In or under slab floors only brazed joints

TABLE III
STANDARD RATING CONDITIONS AND MINIMUM PERFORMANCE RATINGS FOR WATER HEATING EQUIPMENT

A. STORAGE WATER HEATERS

FUEL	STORAGE CAPACITY LITERS	INPUT RATING	TEST PROCEDURE	REQUIRED PERFORMANCE
Gas	380 max.	22 kW max.	10 CFR 430	EF = 0.62-0.0019V minimum
Gas	380 min. OR	22 kW min.	ANSI Z21.10.3	ET= 77 percent; SL = 1.3+38/V max.

TERMS:

EF = Energy factor, overall efficiency.
ET = Thermal efficiency with 21 degrees C delta T.
EC = Combustion efficiency, 100 percent - flue loss when smoke = 0 (trace is permitted).
SL = Standby loss in W/0.09 sq. m. based on 27 degrees C delta T, or in percent per hour based on nominal 32 degrees C delta T.
HL = Heat loss of tank surface area
V = Storage volume in gallons

End of Section

SECTION 15488

GAS PIPING SYSTEMS
01/89

PART 1 GENERAL

1.1 REFERENCES

The publications listed below form a part of this specification to the extent referenced. The publications are referred to in the text by basic designation only.

AMERICAN GAS ASSOCIATION (AGA)

AGA-01	(1989) A.G.A. Plastic Pipe Manual for Gas Service

AMERICAN PETROLEUM INSTITUTE (API)

API Spec 6D	(1994) Specification for Pipeline Valves (Gate, Plug, Ball, and Check Valves)

AMERICAN SOCIETY FOR TESTING AND MATERIALS (ASTM)

ASTM B 88	(1995a) Seamless Copper Water Tube
ASTM B 280	(1993a) Seamless Copper Tube for Air Conditioning and Refrigeration Field Service

AMERICAN SOCIETY OF MECHANICAL ENGINEERS (ASME)

ASME B1.20.1	(1983; R 1992) Pipe Threads, General Purpose (Inch)
ASME B16.3	(1992) Malleable Iron Threaded Fittings
ASME B16.5	(1988; Errata Oct 88; B16.5a) Pipe Flanges and Flanged Fittings
ASME B16.9	(1993) Factory-Made Wrought Steel Buttwelding Fittings
ASME B16.11	(1991) Forged Fittings, Socket-Welding and Threaded
ASME B16.21	(1992) Nonmetallic Flat Gaskets for Pipe Flanges
ASME B16.33	(1990) Manually Operated Metallic Gas Valves for Use in Gas Piping Systems Up to 125 psig (Sizes 1/2 through 2)
ASME B31.1	(1995) Power Piping
ASME B31.2	(1968) Fuel Gas Piping

ASME B36.10M	(1985; R 1994) Welded and Seamless Wrought Steel Pipe
ASME BPV IX	(1995; Addenda Dec 1995) Boiler and Pressure Vessel Code; Section IX, Welding and Brazing Qualifications

MANUFACTURERS STANDARDIZATION SOCIETY OF THE VALVE AND FITTINGS INDUSTRY (MSS)

MSS SP-58	(1993) Pipe Hangers and Supports - Materials, Design and Manufacture
MSS SP-69	(1991) Pipe Hangers and Supports - Selection and Application

NATIONAL FIRE PROTECTION ASSOCIATION (NFPA)

NFPA 54	(1992) National Fuel Gas Code
NFPA 70	(1996) National Electrical Code

STEEL STRUCTURES PAINTING COUNCIL (SSPC)

SSPC SP 6	(1994) Commercial Blast Cleaning

1.2 GENERAL REQUIREMENTS

1.2.1 Welding

Piping shall be welded in accordance with qualified procedures using performance qualified welders and welding operators. Procedures and welders shall be qualified in accordance with ASME BPV IX. Welding procedures qualified by others, and welders and welding operators qualified by another employer may be accepted as permitted by ASME B31.1. The Contracting Officer shall be notified at least 24 hours in advance of tests and the tests shall be performed at the work site if practicable. The Contracting Officer shall be furnished with a copy of qualified procedures and a list of names and identification symbols of qualified welders and welding operators. The welder or welding operator shall apply his assigned symbol near each weld he makes as a permanent record. Structural members shall be welded in accordance with Section 05055 WELDING, STRUCTURAL.

1.2.2 Standard Products

Materials and equipment shall be the standard products of a manufacturer regularly engaged in the manufacture of the products and shall essentially duplicate items that have been in satisfactory use for at least 2 years prior to bid opening. Asbestos or products containing asbestos shall not be used.

PART 2 PRODUCTS

2.1 PIPE AND FITTINGS

2.1.1 Steel Pipe, Joints, and Fittings

Steel pipe shall conform to ASME B36.10M. Malleable-iron threaded fittings shall conform to ASME B16.3. Steel pipe flanges and flanged fittings including bolts, nuts, and bolt pattern shall be in accordance with ASME B16.5. Wrought steel buttwelding fittings shall conform to ASME B16.9. Socket welding and threaded forged steel fittings shall conform to ASME B16.11.

2.1.2 Copper Tubing, Joints and Fittings

Copper tubing shall conform to ASTM B 88, Type K or L, or ASTM B 280. Tubing joints shall be made up with tubing fittings recommended by the tubing manufacturer.

2.1.3 Identification

Pipe flow markings and metal tags shall be provided as required.

2.1.4 Flange Gaskets

Gaskets shall be nonasbestos compressed material in accordance with ASME B16.21, 1.6 mm (1/16 inch) thickness, full face or self-centering flat ring type.

2.1.5 Pipe Threads

Pipe threads shall conform to ASME B1.20.1.

2.1.6 Escutcheons

Escutcheons shall be chromium-plated steel or chromium-plated brass, either one piece or split pattern, held in place by internal spring tension or set screw.

2.1.7 Gas Transition Fittings

Gas transition fittings shall be manufactured steel fittings approved for jointing metallic and thermoplastic or fiberglass pipe. Approved transition fittings are those that conform to AGA-01 requirements for transitions fittings.

2.2 VALVES

Valves shall be suitable for shutoff or isolation service and shall conform to the following:

2.2.1 Valves 50 mm and Smaller

Valves 50 mm and smaller shall conform to ASME B16.33 and shall be of materials and manufacture compatible with system materials used.

2.2.2 Valves 65 mm and Larger

Valves 65 mm and larger shall be carbon steel conforming to API Spec 6D, Class 150.

2.2.3 Seismic Valve

Valve shall be factor mutual approved and shall be rated for 415 kPa maximum allowable working pressure. Valve shall be tested to five times pressure rating. Valve shall be installed and maintained in accordance with factory mutual.

2.3 PIPE HANGERS AND SUPPORTS

Pipe hangers and supports shall conform to MSS SP-58 and MSS SP-69.

2.4 METERS, REGULATORS AND SHUTOFF VALVES

Meters, regulators and shutoff valves shall be as specified in Section 02685 GAS DISTRIBUTION SYSTEM.

PART 3 EXECUTION

3.1 EXCAVATION AND BACKFILLING

Earthwork shall be as specified in Section 02222 EXCAVATION, TRENCHING AND BACKFILLING FOR UTILITIES SYSTEMS.

3.2 GAS PIPING SYSTEM

Gas piping system shall be from the point of delivery, defined as the outlet of the meter set assembly, specified in Section 02685 GAS DISTRIBUTION SYSTEM, to the connections to each gas utilization device.

3.2.1 Protection of Materials and Components

Pipe and tube openings shall be closed with caps or plugs during installation. Equipment shall be protected from dirt, water, and chemical or mechanical damage. At the completion of all work, the entire system shall be thoroughly cleaned.

3.2.2 Workmanship and Defects

Piping, tubing and fittings shall be clear and free of cutting burrs and defects in structure or threading and shall be thoroughly brushed and chip- and scale-blown. Defects in piping, tubing or fittings shall not be repaired. When defective piping, tubing, or fittings are located in a system, the defective material shall be replaced.

3.3 PROTECTIVE COVERING

3.3.1 Aboveground Metallic Piping Systems

3.3.1.1 Ferrous Surfaces

Shop primed surfaces shall be touched up with ferrous metal primer. Surfaces that have not been shop primed shall be solvent cleaned. Surfaces that contain loose rust, loose mill scale and other foreign substances shall be mechanically cleaned by power wire brushing or commercial sand blasted conforming to SSPC SP 6 and primed with ferrous metal primer or vinyl type wash coat. Primed surface shall be finished with two coats of exterior oil paint or vinyl paint.

3.3.1.2 Nonferrous Surfaces

Except for aluminum alloy pipe, nonferrous surfaces shall not be painted. Surfaces of aluminum alloy pipe and fittings shall be painted to protect against external corrosion where they contact masonry, plaster, insulation, or are subject to repeated wettings by such liquids as water, detergents or sewage. The surfaces shall be solvent-cleaned and treated with vinyl type wash coat. A first coat of aluminum paint and a second coat of alkyd gloss enamel or silicone alkyd copolymer enamel shall be applied.

3.4 INSTALLATION

Installation of the gas system shall be in conformance with the manufacturer's recommendations and applicable provisions of NFPA 54, AGA-01, and as indicated. Pipe cutting shall be done without damage to the pipe. Unless otherwise authorized, cutting shall be done by an approved type of mechanical cutter. Wheel cutters shall be used where practicable. On steel pipe 150 mm and larger, an approved gas cutting and beveling machine may be used. Cutting of thermoplastic and fiberglass pipe shall be in accordance with AGA-01.

3.4.1 Metallic Piping Installation

Changes in direction of piping shall be made with fittings only; mitering or notching pipe to form elbows and tees or other similar type construction will not be permitted. Branch connection may be made with either tees or forged branch outlet fittings. Branch outlet fittings shall be forged, flared for improvement of flow where attached to the run, and reinforced against external strains. Aluminum alloy pipe shall not be used in exterior locations or underground.

3.4.2 Concealed Piping in Buildings

When installing piping which is to be concealed, unions, tubing fittings, running threads, right- and left-hand couplings, bushings, and swing joints made by combinations of fittings shall not be used.

3.4.2.1 Piping in Partitions

Concealed piping shall be located in hollow rather than solid partitions. Tubing passing through walls or partitions shall be protected against physical damage.

3.4.3 Aboveground Piping

Aboveground piping shall be run as straight as practicable along the alignment indicated and with a minimum of joints. Piping shall be separately supported. Exposed horizontal piping shall not be installed farther than 150 mm from nearest parallel wall in laundry areas where clothes hanging could be attempted.

3.4.4 Final Gas Connections

Unless otherwise specified herein, final connections shall be made with rigid metallic pipe and fittings. Flexible connectors may be used for final connections to gas utilization equipment. In addition to cautions listed in

instructions required by ANSI standards for flexible connectors, insure that flexible connectors do not pass through equipment cabinet. Provide accessible gas shutoff valve and coupling for each gas equipment item.

3.5 PIPE JOINTS

Pipe joints shall be designed and installed to effectively sustain the longitudinal pull-out forces caused by contraction of the piping or superimposed loads.

3.5.1 Threaded Metallic Joints

Threaded joints in metallic pipe shall have tapered threads evenly cut and shall be made with UL approved graphite joint sealing compound for gas service or tetrafluoroethylene tape applied to the male threads only. Threaded joints up to 40 mm in diameter may be made with approved tetrafluoroethylene tape. Threaded joints up to 50 mm in diameter may be made with approved joint sealing compound. After cutting and before threading, pipe shall be reamed and burrs shall be removed. Caulking of threaded joints to stop or prevent leaks shall not be permitted.

3.5.2 Welded Metallic Joints

Beveling, alignment, heat treatment, and inspection of welds shall conform to ASME B31.2. Weld defects shall be removed and repairs made to the weld, or the weld joints shall be entirely removed and rewelded. After filler metal has been removed from its original package, it shall be protected or stored so that its characteristics or welding properties are not affected adversely. Electrodes that have been wetted or have lost any of their coating shall not be used.

3.5.3 Flared Metallic Tubing Joints

Flared joints in metallic tubing shall be made with special tools recommended by the tubing manufacturer. Flared joints shall be used only in systems constructed from nonferrous pipe and tubing, when experience or tests have demonstrated that the joint is suitable for the conditions, and when adequate provisions are made in the design to prevent separation of the joints. Metallic ball sleeve compression-type tubing fittings shall not be used for tubing joints.

3.6 PIPE SLEEVES

Pipes passing through concrete or masonry walls or concrete floors or roofs shall be provided with pipe sleeves fitted into place at the time of construction. Sleeves shall not be installed in structural members except where indicated or approved.

3.7 PIPES PENETRATING WATERPROOFING MEMBRANES

Pipes penetrating waterproofing membranes shall be installed as specified in Section 15400 PLUMBING, GENERAL PURPOSE.

3.8 FIRE SEAL

Penetrations of fire rated partitions, walls and floors shall be in accordance with Section 07270 FIRESTOPPING.

3.9 ESCUTCHEONS

Escutcheons shall be provided for all finished surfaces where gas piping passes through floors, walls, or ceilings except in boiler, utility, or equipment rooms.

3.10 SPECIAL REQUIREMENTS

Drips, grading of the lines, freeze protection, and branch outlet locations shall be as shown and shall conform to the requirements of NFPA 54.

3.11 BUILDING STRUCTURE

Building structure shall not be weakened by the installation of any gas piping. Beams or joists shall not be cut or notched.

3.12 PIPING SYSTEM SUPPORTS

Gas piping systems in buildings shall be supported with pipe hooks, metal pipe straps, bands or hangers suitable for the size of piping or tubing. Gas piping system shall not be supported by other piping. Spacing of supports in gas piping and tubing installations shall conform to the requirements of NFPA 54. The selection and application of supports in gas piping and tubing installations shall conform to the requirements of MSS SP-69. In the support of multiple pipe runs on a common base member, a clip or clamp shall be used where each pipe crosses the base support member. Spacing of the base support members shall not exceed the hanger and support spacing required for any of the individual pipes in the multiple pipe run. The clips or clamps shall be rigidly connected to the common base member. A clearance of 3.2 mm shall be provided between the pipe and clip or clamp for all piping which may be subjected to thermal expansion.

3.13 ELECTRICAL BONDING AND GROUNDING

A gas piping system within a building shall be electrically continuous and bonded to a grounding electrode as required by NFPA 70.

3.14 SHUTOFF VALVE

Main gas shutoff valve controlling the gas piping system shall be easily accessible for operation and shall be installed as indicated, protected from physical damage, and marked with a metal tag to clearly identify the piping system controlled.

3.15 TESTING

Before any section of a gas piping system is put into service, it shall be carefully tested to assure that it is gastight. Prior to testing, the system shall be blown out, cleaned and cleared of all foreign material. Each joint shall be tested by means of an approved gas detector, soap and water, or an equivalent nonflammable solution. Testing shall be completed before any work is covered, enclosed, or concealed. All testing of piping systems shall be done with due regard for the safety of employees and the public during the test. Bulkheads, anchorage and bracing suitably designed to resist test pressures shall be installed if necessary. Oxygen shall not be used as a testing medium.

3.15.1 Pressure Tests

Before appliances are connected, piping systems shall be filled with air or an inert gas and shall withstand a minimum pressure of 21 kPa gauge for a period of not less than 10 minutes as specified in NFPA 54 without showing any drop in pressure. Oxygen shall not be used. Pressure shall be measured with a mercury manometer, slope gauge, or an equivalent device so calibrated as to be read in increments of not greater than 1 kPa. The source of pressure shall be isolated before the pressure tests are made.

3.15.2 Test With Gas

Before turning gas under pressure into any piping, all openings from which gas can escape shall be closed. Immediately after turning on the gas, the piping system shall be checked for leakage by using a laboratory-certified gas meter, an appliance orifice, a manometer, or equivalent device. All testing shall conform to the requirements of NFPA 54. If leakage is recorded, the gas supply shall be shut off, the leak shall be repaired, and the tests repeated until all leaks have been stopped.

3.15.3 Purging

After testing is completed, and before connecting any appliances, all gas piping shall be fully purged. LPG piping tested using fuel gas with appliances connected does not require purging. Piping shall not be purged into the combustion chamber of an appliance. The open end of piping systems being purged shall not discharge into confined spaces or areas where there are ignition sources unless the safety precautions recommended in NFPA 54 are followed.

3.15.4 Labor, Materials and Equipment

All labor, materials and equipment necessary for conducting the testing and purging shall be furnished by the Contractor.

End of Section

SECTION 15569

WATER AND STEAM HEATING; OIL, GAS OR BOTH; UP TO 20 MBTUH
05/95

PART 1 GENERAL

1.1 REFERENCES

The publications listed below form a part of this specification to the extent referenced. The publications are referred to in the text by basic designation only.

AIR MOVEMENT AND CONTROL ASSOCIATION (AMCA)

AMCA 801	(1992) Industrial Process/Power Generation Fans: Specification Guidelines

AMERICAN SOCIETY FOR TESTING AND MATERIALS (ASTM)

ASTM A 53	(1995a) Pipe, Steel, Black and Hot-Dipped, Zinc-Coated Welded and Seamless
ASTM A 105	(1997) Forgings, Carbon Steel, for Piping Components
ASTM A 167	(1996) Stainless and Heat-Resisting Chromium-Nickel Steel Plate, Sheet, and Strip
ASTM A 193	(1996) Alloy-Steel and Stainless Steel Bolting Materials for High-Temperature Service
ASTM A 234	(1996) Piping Fittings of Wrought Carbon Steel and Alloy Steel for Moderate and Elevated Temperatures
ASTM A 515	(1992) Pressure Vessel Plates, Carbon Steel, for Intermediate- and Higher-Temperature Service
ASTM A 516	(1990) Pressure Vessel Plates, Carbon Steel, for Moderate- and Lower-Temperature Service
ASTM B 32	(1995a) Solder Metal
ASTM B 62	(1993) Composition Bronze or Ounce Metal Castings
ASTM B 75	(1993) Seamless Copper Tube
ASTM B 88	(1996) Seamless Copper Water Tube

ASTM B 813	(1993) Liquid and Paste Fluxes for Soldering Applications of Copper and Copper Alloy Tube
ASTM B 828	(1992) Making Capillary Joints by Soldering of Copper and Copper-Alloy Tube and Fittings
ASTM D 596	(1991) Reporting Results of Analysis of Water

AMERICAN SOCIETY OF MECHANICAL ENGINEERS (ASME)

ASME B1.20.1	(1983; R 1992) Pipe Threads, General Purpose (Inch)
ASME B16.3	(1992) Malleable Iron Threaded Fittings
ASME B16.4	(1992) Gray Iron Threaded Fittings
ASME B16.5	(1988; Errata Oct 88; B16.5a) Pipe Flanges and Flanged Fittings
ASME B16.9	(1993) Factory-Made Wrought Steel Buttwelding Fittings
ASME B16.11	(1991) Forged Fittings, Socket-Welding and Threaded
ASME B16.15	(1985; R 1994) Cast Bronze Threaded Fittings Classes 125 and 250
ASME B16.18	(1984; R 1994) Cast Copper Alloy Solder Joint Pressure Fittings
ASME B16.21	(1992) Nonmetallic Flat Gaskets for Pipe Flanges
ASME B16.22	(1989) Wrought Copper and Copper Alloy Solder Joint Pressure Fittings
ASME B16.26	(1988) Cast Copper Alloy Fittings for Flared Copper Tubes
ASME B16.34	(1988) Valves - Flanged, Threaded and Welding End
ASME B16.39	(1986; R 1994) Malleable Iron Threaded Pipe Unions Classes 150, 250, and 300
ASME B19.3	(1991; B19.3a; B19.3b) Safety Standard for Compressors for Process Industries
ASME B31.1	(1995) Power Piping
ASME B31.5	(1992; B31.5a) Refrigeration Piping
ASME B40.1	(1991) Gauges - Pressure Indicating Dial Type - Elastic Element

ASME BPV IV	(1995; Addenda Dec 1995) Boiler and Pressure Vessel Code; Section IV, Heating Boilers
ASME BPV VIII Div 1	(1995; Addenda Dec 1995) Boiler and Pressure Vessel Code; Section VIII, Pressure Vessels Division 1 - Basic Coverage
ASME BPV IX	(1995; Addenda Dec 1995) Boiler and Pressure Vessel Code; Section IX, Welding and Brazing Qualifications
ASME CSD-1	(1992; CSD-1a; CSD-1b) Controls and Safety Devices for Automatically Fired Boilers

AMERICAN WATER WORKS ASSOCIATION (AWWA)

AWWA C606	(1987) Grooved and Shouldered Joints

AMERICAN WELDING SOCIETY (AWS)

AWS A5.8	(1992) Filler Metals for Brazing and Braze Welding
AWS B2.2	(1991) Brazing Procedure and Performance Qualification

COPPER DEVELOPMENT ASSOCIATION (CDA)

CDA 404/0 RR	(1993) Copper Tube for Plumbing, Heating, Air Conditioning and Refrigeration

HYDRONICS INSTITUTE (HYI)

HYI-01	(1996) I=B=R Ratings for Boilers, Baseboard Radiation and Finned Tube (Commercial) Radiation

MANUFACTURERS STANDARDIZATION SOCIETY OF THE VALVE AND FITTINGS INDUSTRY (MSS)

MSS SP-25	(1993) Standard Marking System for Valves, Fittings, Flanges and Unions
MSS SP-58	(1993) Pipe Hangers and Supports - Materials, Design and Manufacture
MSS SP-69	(1996) Pipe Hangers and Supports - Selection and Application
MSS SP-70	(1990) Cast Iron Gate Valves, Flanged and Threaded Ends
MSS SP-71	(1990) Cast Iron Swing Check Valves, Flanges and Threaded Ends
MSS SP-72	(1992) Ball Valves with Flanged or Butt-welding Ends for General Service

MSS SP-73	(1991) Brazing Joints for Copper and Copper Alloy Pressure Fittings
MSS SP-78	(1987; R 1992) Cast Iron Plug Valves, Flanged and Threaded Ends
MSS SP-80	(1987) Bronze Gate, Globe, Angle and Check Valves
MSS SP-85	(1994) Cast Iron Globe & Angle Valves, Flanged and Threaded Ends
MSS SP-110	(1992) Ball Valves Threaded, Socket Welding, Solder Joint, Grooved and Flared Ends

NATIONAL FIRE PROTECTION ASSOCIATION (NFPA)

NFPA 54	(1992) National Fuel Gas Code

UNDERWRITERS LABORATORIES (UL)

UL-06	(1996) Gas and Oil Equipment Directory
UL 795	(1994; Rev Jan 1996)Commercial-Industrial Gas Heating Equipment

1.2 GENERAL REQUIREMENTS

1.2.1 Standard Products

Materials and equipment shall be the standard products of a manufacturer regularly engaged in the manufacture of the products and shall essentially duplicate items that have been in satisfactory use for at least 2 years prior to bid opening. Equipment shall be supported by a service organization that is, in the opinion of the Contracting Officer, reasonably convenient to the site.

1.2.2 Asbestos Prohibition

Asbestos and asbestos-containing products shall not be used.

1.2.3 Nameplates

Each major component of equipment shall have the manufacturer's name, address, type or style, model or serial number, and catalog number on a plate secured to the equipment. Each pressure vessel shall have an approved ASME stamp.

1.2.4 Equipment Guards

Belts, pulleys, chains, gears, couplings, projecting setscrews, keys, and other rotating parts exposed to personnel contact shall be fully enclosed or guarded in accordance with OSHA requirements. High temperature equipment and piping exposed to contact by personnel or where it creates a potential fire hazard shall be properly guarded or covered with insulation of a type specified. Catwalks, operating platforms, ladders, and guardrails shall be

provided where shown and shall be constructed in accordance with Section 05500 MISCELLANEOUS METAL.

1.2.5 Verification of Dimensions

The Contractor shall become familiar with details of the work, verify dimensions in the field, and shall advise the Contracting Officer of any discrepancy before performing any work or ordering any materials.

1.2.6 Welding

Boilers and piping shall be welded and brazed in accordance with qualified procedures using performance-qualified welders and welding operators. Procedures and welders shall be qualified in accordance with ASME BPV IX. Welding procedures qualified by others, and welders and welding operators qualified by another employer may be accepted as permitted by ASME B31.1. The Contracting Officer shall be notified 24 hours in advance of tests, and the tests shall be performed at the work site if practical. The welder or welding operator shall apply his assigned symbol near each weld he makes as a permanent record. Structural members shall be welded in accordance with Section 05055 WELDING, STRUCTURAL.

1.3 SUBMITTALS

Government approval is required for submittals with a "GA" designation; submittals having an "FIO" designation are for information only. The following shall be submitted in accordance with Section 01300 SUBMITTAL PROCEDURES:

SD-01 Data

Manufacturer's Catalog Data; FIO.

Manufacturer's catalog data shall be included with the detail drawings for the following items:

Fuel Burning Equipment
Combustion Control Equipment
Fittings and Accessories
Water Treatment System

The data shall show model, size, options, etc., that are intended for consideration. Data submitted shall be adequate to demonstrate compliance with contract requirements.

Manufacturer's Catalog Data; GA.

Manufacturer's catalog data shall be included with the detail drawings for the following items:

Boilers
Pumps

The data shall show model, size, options, etc., that are intended for consideration. Data submitted shall be adequate to demonstrate compliance with contract requirements.

Spare Parts Data; FIO.

Spare parts data for each different item of material and equipment, after approval of the detail drawings and no later than 2 months prior to the date of beneficial occupancy. The data shall include a complete list of parts and supplies, with current unit prices and source of supply, and a list of the parts recommended by the manufacturer to be replaced after 1 and 3 years of service.

Water Treatment Plan; FIO.

Six complete copies of the proposed water treatment plan. The plan shall include a layout, control scheme, a list of the existing water conditions including the items listed in paragraph BOILER WATER TREATMENT, a list of all chemicals, the proportion of chemicals to be added, the final treated water conditions, and a description of environmental concerns for handling the chemicals.

Heating and Fuel Systems Test Procedures; FIO.

Proposed test procedures for the heating system tests and fuel system tests, at least 2 weeks prior to the start of related testing.

Welding Procedures; FIO.

A copy of qualified welding procedures, at least 2 weeks prior to the start of welding operations.

Qualification; FIO.

A statement from the firms proposed to prepare submittals and perform installation and testing, demonstrating successful completion of similar services of at least five projects of similar size or scope, at least 2 weeks prior to the submittal of any other item required by this section.

Welding Qualification; FIO.

A list of names and identification symbols of qualified welders and welding operators, at least 2 weeks prior to the start of welding operations.

SD-04 Drawings

Heating System; FIO.

Detail drawings consisting of equipment layout including installation details and electrical connection diagrams; combustion and safety control diagrams; ductwork layout showing the location of supports and hangers, typical hanger details, gauge reinforcement, reinforcement spacing rigidity classification, and static pressure and seal classifications; and piping layout showing the location of guides and anchors, the load imposed on each support or anchor, and typical support details. Drawings shall include any information required to demonstrate that the system has been coordinated and will properly function as a unit and shall show equipment relationship to other parts of the work, including clearances required for operation and maintenance.

SD-06 Instructions

Posted Instructions; GA.

System layout diagrams that show the layout of equipment, piping, and ductwork and typed condensed operation manuals explaining preventative maintenance procedures, methods of checking the system for normal, safe operation, and procedures for safely starting and stopping the system, framed under glass or laminated plastic, at least 2 weeks prior to the start of related testing. After approval, these items shall be posted where directed.

SD-07 Schedules

Tests; FIO.

Proposed test schedules for the heating system and fuel system tests, at least 2 weeks prior to the start of related testing.

SD-09 Reports

Heating System and Fuel System Tests; FIO.

Test reports for the heating system tests and the fuel system test, upon completion of testing complete with results.

Water Treatment Tests; FIO.

(1) The water quality test report shall identify the chemical composition of the boiler water. The report shall include a comparison of the condition of the boiler water with the manufacturer's recommended conditions. Any required corrective action shall be documented within the report.

(2) A test report shall identify the condition of the boiler at the completion of 1 year of service. The report shall include a comparison of the condition of the boiler with the manufacturer's recommended operating conditions.

SD-13 Certificates

Bolts; FIO.

Written certification by the bolt manufacturer that the bolts furnished comply with the requirements of this specification. The certification shall include illustrations of product markings, the date of manufacture, and the number of each type of bolt to be furnished based on this certification.

Boiler Emissions; FIO.

Written certification by the boiler manufacturer that each boiler furnished complies with Federal, state, and local regulations for emissions. The certification shall also include a description of applicable emission regulations. If any boiler is exempt from the emission regulations, the certification shall indicate the reason for the exemption.

SD-19 Operation and Maintenance Manuals

Heating System; FIO.

Six complete manuals listing step-by-step procedures required for system startup, operation, shutdown, and routine maintenance, at least 2 weeks prior to field training. The manuals shall include the manufacturer's name, model number, parts list, simplified wiring and control diagrams, troubleshooting guide, and recommended service organization (including address and telephone number) for each item of equipment. Each service organization shall be capable of providing 4 hour onsite response to a service call on an emergency basis.

Water Treatment System; FIO.

Six complete copies of operating and maintenance manuals for the step-by-step water treatment procedures, including procedures for testing the water quality.

1.4 MANUFACTURER'S SERVICES

Services of a manufacturer's representative who is experienced in the installation, adjustment, and operation of the equipment specified shall be provided. The representative shall supervise the installing, adjusting, and testing of the equipment.

1.5 DELIVERY AND STORAGE

Equipment delivered and placed in storage shall be protected from the weather, humidity and temperature variations, dirt and dust, and other contaminants.

PART 2 PRODUCTS

2.1 BOILERS

Each boiler shall have the output capacity in kilowatts (kW) as indicated when fired with the specified fuels. The boiler shall be furnished complete with the gas burning equipment, boiler fittings and trim, automatic controls, forced draft fan, electrical wiring, insulation, piping connections, and protective jacket. The boiler shall be completely assembled and tested at the manufacturer's plant. Boiler auxiliaries including fans, motors, drives, and similar equipment shall be provided with at least 10 percent excess capacity to allow for field variations in settings and to compensate for any unforeseen increases in pressure losses in appurtenant piping and ductwork. However, the boiler safety devices shall not be sized for a 10 percent excess capacity. The boiler and its accessories shall be designed and installed to permit ready accessibility for operation, maintenance, and service. Boilers shall be designed, constructed, and equipped in accordance with ASME BPV IV. Each boiler shall be of the firetube type and designed for water service as specified herein. The boiler capacity shall be based on the ratings shown in HYI-01 or as certified by the American Boiler Manufacturers Association, or American Gas Association.

2.1.1 Firetube Boiler

Boiler shall be self-contained, multipass, packaged type, complete with all accessories, mounted on a structural steel base. When the boilers is

operating at maximum output, the heat input rates shall not be greater than 21 Kw per square meter of fireside heating surface. The volume heat input rate shall not be less than 2,07 Kw per cubic meter of furnace volume.

2.1.2 Hot Water Heating Boilers

The hot water heating boiler shall be capable of operating at the specified maximum continuous capacity without damage or deterioration to the boiler, its setting, firing equipment, or auxiliaries. The rated capacity shall be the capacity at which the boiler will operate continuously while maintaining at least the specified minimum efficiency. The boiler design conditions shall be as follows:

a. Boiler design pressure 400 kPa.

b. Operating pressure at boiler outlet 300 kPa.

c. Hot water temperature 80 degrees C.

d. Temperature differential between boiler discharge and system return 11 degrees C.

e. Maximum water pressure drop 70 kPa.

f. Outdoor ambient air temperature -4 degrees C min, 30 degrees C max.

g. Site elevation 100 m.

h. Refer to drawings for capacities.

2.1.3 Steam Boilers

Boilers shall be vertical tubless type. Boiler unit includes all standard boiler trim, boiler level control and combination low water cut-off feeder, draft regulator, insulating firebrick lined combustion chamber, external insulation covered with metal jacket, multi-port atmospheric gas burner safety and operating controls, and gas valve for step-action lighting of main burners. Boiler shall be assembled at factory. Vertical diverter shall be furnished as standard equipment. Openings shall be provided so control equipment and feed water inlet can be mounted on either side of boiler. The boiler shall be provided with a water column with gauge glass and fittings including water column and gauge glass drain valves of the straight through type. The steam heating boiler shall be capable of operating at the specified maximum continuous capacity without damage or deterioration to the boiler, its setting, firing equipment, or auxiliaries. The rated capacity shall be the capacity at which the boilers will operate continuously while maintaining at least the specified minimum efficiency. Design conditions shall be as follows:

a. Boiler design pressure 200 kPa.

b. Operating pressure at boiler outlet 70 kPa.

c. Steam temperature 120 degrees C.

d. Feedwater temperature 8 degrees C.

e. Outdoor ambient air temperature 30 degrees C max, -4 degrees C min.

f. Site elevation 100 m.

g. Rated capacity: Refer to drawings.

h. Boiler shall have a combustion efficiency of at least 80 percent when fired at the maximum and minimum ratings allowed by the controls.

2.2 FUEL BURNING EQUIPMENT

Boiler shall be designed to burn gas. Each boiler shall comply with Federal, state, and local emission regulations.

2.2.1 Burners

2.2.1.1 Gas Fired Burners and Controls

Burners shall be UL approved mechanical draft burners with all air necessary for combustion supplied by a blower where the operation is coordinated with the burner. Burner shall be provided complete with fuel supply system in conformance with the following safety codes or standards:

a. Gas-fired units with inputs greater than 1.17 MW per combustion chamber shall conform to UL 795.

2.2.2 Draft Fans

Fans conforming to AMCA 801 forced-draft shall be furnished as an integral part of boiler design. Fans shall be centrifugal type. Each fan shall be sized for output volume and static pressure rating sufficient for pressure losses, excess air requirements at the burner, leakages, temperature, and elevation corrections for worst ambient conditions, all at full combustion to meet net-rated output at normal firing conditions, plus an overall excess air volume of 10 percent against a 20 percent static overpressure. Noise levels for fans shall not exceed 85 decibels in any octave band at a .914 meters station.

2.2.2.1 Draft Fan Control

Forced-draft centrifugal fans shall have inlet vane controls or shall have variable speed control where indicated. Inlet vanes shall be suitable for use with combustion control equipment.

2.2.2.2 Draft Fan Drives

Fans shall be driven by electric motors. Electric motor shall be drip proof or totally enclosed fan cooled. Motor starter shall be magnetic across-the-line type with general purpose enclosure and shall be furnished with four auxiliary interlock contacts.

2.2.3 Draft Damper

Boilers shall be provided with automatic dampers, draft hoods, or barometric dampers as recommended by the boiler manufacturer to maintain proper draft in the boiler. Draft damper shall be provided in a convenient and

accessible location in the flue gas outlet from the boiler. Automatic damper shall be arranged for automatic operation by means of a damper regulator.

2.3 COMBUSTION CONTROL EQUIPMENT

Combustion control equipment shall be provided as a system by a single manufacturer. Field installed automatic combustion control system shall be installed in accordance with the manufacturer's recommendations and under the direct supervision of a representative of the control manufacturer. The boiler water temperature shall be controlled by a water temperature controller. The equipment shall operate either electrically or pneumatically. On multiple boiler installations, each boiler unit shall have a completely independent system of controls responding to the load and to a plant master controller. If recording instruments are provided, a 1 year supply of ink and 400 blank charts for each recorder shall be furnished.

2.3.1 Pneumatic Controls

If pneumatic operation is provided, a regenerant desiccant air dryer unit shall be provided. Boiler shall shut down on loss of control air pressure. Pneumatic control systems shall conform to ASME B19.3. Air filter regulator sets shall be installed at each control valve and transmitter in the system. The master air filter regulator set on the control panel shall be the dual type where one side can be cleaned and repaired while the other is operating. Exterior control air piping and devices shall be protected form freezing.

2.3.2 Electrical controls

Electrical control devices shall be rated at 120 volts and shall be connected as specified in Section 16415 ELECTRICAL WORK, INTERIOR.

2.3.3 Water Temperature Controller

The controller shall be of sturdy construction and shall be protected against dust and dampness. The thermostatic element shall be inserted in a separable socket installed in the upper part of the boiler near the water outlet. Fixed position (on-off) and three position (high-low-off) controller shall operate on a 5.56 degree C differential over an adjustable temperature range of approximately 60 to 104.4 degrees C.

2.3.4 Steam Pressure Controller

The controller shall be of sturdy construction and shall be protected against dust and dampness. The sensing elements of the steam controller shall be in direct contact with the steam. Fixed position (on-off) and three position (high-low-off) type controllers shall operate on a 6.9 kPa differential over a pressure range of 0 to 103.4 kPa.

2.3.5 Boiler Combustion Controls and Positioners

a. Gas boiler units shall be provided with modulating combustion controls with spark ignition. Modulating controls shall be provided with a means for manually controlling the firing rate.

b. Modulating control function shall be accomplished using positioning type controls. Air flow ratio and fuel control valve shall be controlled by relative positions of operative levers on a jackshaft responding to a water temperature controller. Positioning type combustion control equipment shall include draft controls with synchronized fuel feed and combustion air supply controls, while and shall maintain the proper air/fuel ratio. The desired furnace draft shall be maintained within 0.01 inch of water column.

2.3.6 Combustion Safety Controls and Equipment

Combustion safety controls and equipment shall be UL listed, microprocessor-based distributed process controller. The system shall include mounting hardware, wiring and cables, and associated equipment. The controller shall be mounted completely wired, programmed, debugged, and tested to perform all of its functions. The controller shall process the signals for complete control and monitoring of the boiler. This shall include maintaining boiler status, starting and stopping all control functions, sequencing control functions and signaling alarm conditions. The program shall be documented and include cross references in description of coils and contacts. Microprocessor shall be able to perform self diagnostics and contain a message center to provide operator with status and failure mode information. Controllers for each boiler shall be mounted on a separate, free standing panel adjacent to the boiler or for packaged boilers on the boiler supporting structure. Control systems and safety devices for automatically fired boilers shall conform to ASME CSD-1. Electrical combustion and safety controls shall be rated at 120 volts, single phase, 60 Hz and shall be connected as specified in Section 16415 ELECTRICAL WORK, INTERIOR. A 100 mm diameter alarm bell shall be provided and shall be located where indicated or directed. The alarm bell shall ring when the boiler is shut down by any safety control or interlock. Indicating lights shall be provided on the control panel. A red light shall indicate flame failure, and a green light shall indicate that the main fuel valve is open. The following shutdown conditions shall require a manual reset before the boiler can automatically recycle:

a. Flame failure.

b. Failure to establish pilot flame.

c. Failure to establish main flame.

d. Low-water cutoff.

e. High temperature cutoff.

2.3.6.1 Low-water Cutoff

Low-water cutoff shall be provided to stop the burner and draft fan when the water level drops below a predetermined point. The cutoff shall consist of a float chamber with float, float switch, and drain valve. The float switch shall be mounted on the float chamber with a packless-type leakproof connection. The float mechanism and drain valve shall be constructed of a corrosion-resistant material. The low-water cutoff shall be UL-06 listed and shall be furnished with approved fittings and installed according to ASME boiler code requirements. The following type of low-water cutoff shall be utilized.

a. Pump Controller with Low-Water Cutoff: Controller shall be a design approved by the boiler manufacturer. A pump controller shall be provided for each boiler which is used for space heating and process steam loads or long distribution lines. Pump controller shall control the operation of the burner, forced-draft fan, and pump. Pump controller and low-water cutoff shall have a float-operated mercury switch arranged to start and stop the pump at preset boiler water levels. If the water level in the boiler reaches the low danger point, a second mercury switch shall shut down the burner and actuate the alarm bell.

2.4 PUMPS

2.4.1 Hot Water and Boiler Circulating Pumps

Circulating pumps for hot water shall be electrically driven single-stage centrifugal type and have a capacity not less than indicated. Boiler circulating pumps shall be supported by the piping on which installed and shall be closed-coupled shaft or flexible-coupled shaft. Heating hot water pumps shall be supported on a concrete foundation with a cast iron or structural steel base and shall have a closed-coupled shaft or flexible-coupled shaft. The hot water circulating pumps shall be vertical split case type. The pump shaft shall be constructed of corrosion-resistant alloy steel, sleeve bearings and glands of bronze designed to accommodate a mechanical seal, and the housing of close-grained cast iron. Pump seals shall be capable of withstanding 115 degrees C temperature without external cooling. The motor shall have sufficient power for the service required, shall be of a type approved by the manufacturer of the pump, shall be suitable for the available electric service, and shall conform to the requirements of paragraph ELECTRICAL EQUIPMENT. Each pump suction and discharge connection shall be provided with a pressure gauge as specified.

2.5 AIR HANDLING UNITS

Air handling units and associated equipment shall be in accordance with Section 15895 AIR SUPPLY, DISTRIBUTION, VENTILATION, AND EXHAUST SYSTEM.

2.6 FITTINGS AND ACCESSORIES

Boiler fittings and accessories shall be installed with each boiler in accordance with ASME BPV IV, unless otherwise specified.

2.6.1 Conventional Breeching and Stacks

2.6.1.1 Stacks

Prefabricated double wall stacks system shall extend above the roof to the height indicated. The inner stack shall be 304 stainless steel having a thickness of not less than 0.89 mm. The outer stack shall be sheet steel having a thickness of not less than 0.635 mm. A method of maintaining concentricity between the inner and outer stacks shall be incorporated. The joints between the stack sections shall be sealed to prevent flue gas leakage. A 7.92 mm diameter hole shall be provided in the stack not greater than 150 mm from the furnace flue outlet for sampling of the exit gases. A method shall be provided to seal the hole to prevent exhaust gases from entering the boiler room when samples are not being taken. Each stack shall be provided complete with rain hood.

2.6.2 Expansion Tank

The hot water pressurization system shall include a diaphragm-type expansion tank which will accommodate the expanded water of the system generated within the normal operating temperature range, limiting the pressure increase at all components in the system to the maximum allowable pressure at those components. The only air in the system shall be the permanent sealed-in air cushion contained in the diaphragm-type tank. The sizes shall be as indicated. The expansion tank shall be welded steel, constructed, tested, and stamped in accordance with ASME BPV VIII Div 1for a working pressure of 850 kPa and precharged to the minimum operating pressure. The tank's air chamber shall be fitted with an air charging valve and pressure gauge. The tank shall be supported by steel legs or bases for vertical installation or steel saddles for horizontal installations. The tank shall have lifting rings and a drain connection. All components shall be suitable for a maximum operating temperature of 120 degrees C.

2.6.3 Air Separator

External air separation tank shall be steel, constructed, tested and stamped in accordance with ASME BPV VIII Div 1 for a working pressure of 850 kPa. The capacity of the air separation tank indicated is minimum.

2.6.4 Gaskets

Gaskets shall be nonasbestos material in accordance with ASME B16.21, full face or self-centering type. The gaskets shall be of the spiral wound type with graphite filler material.

2.6.5 Steel Pipe and Fittings

2.6.5.1 Steel Pipe

Steel pipe shall be ASTM A 53, Type E or S, Grade A or B, black steel, standard weight, except piping for steam condensate and steam lines up to 65 mm shall be Schedule 80..

2.6.5.2 Steel Pipe Fittings

Fittings shall have the manufacturer's trademark affixed in accordance with MSS SP-25 so as to permanently identify the manufacturer.

2.6.5.3 Steel Flanges

Flanged fittings including flanges, bolts, nuts, bolt patterns, etc. shall be in accordance with ASME B16.5 class 150 and shall have the manufacturers trademark affixed in accordance with MSS SP-25. Flange material shall conform to ASTM A 105. Flanges for high temperature water systems shall be serrated or raised-face type. Blind flange material shall conform to ASTM A 516 cold service and ASTM A 515 for hot service. Bolts shall be high strength or intermediate strength with material conforming to ASTM A 193.

2.6.5.4 Welded Fittings

Welded fittings shall conform to ASTM A 234 with WPA marking. Buttwelded fittings shall conform to ASME B16.9, and socket-welded fittings shall conform to ASME B16.11.

2.6.5.5 Cast-Iron Fittings

Fittings shall be ASME B16.4, Class 125, type required to match connecting piping.

2.6.5.6 Malleable-Iron Fittings

Fittings shall be ASME B16.3, type as required to match connecting piping.

2.6.5.7 Unions

Unions shall be ASME B16.39, Class 150.

2.6.5.8 Threads

Pipe threads shall conform to ASME B1.20.1.

2.6.6 Copper Tubing and Fittings

2.6.6.1 Copper Tubing

Tubing shall be ASTM B 88, Type K or L. Adapters for copper tubing shall be brass or bronze for brazed fittings.

2.6.6.2 Solder-Joint Pressure Fittings

Wrought copper and bronze solder-joint pressure fittings shall conform to ASME B16.22 and ASTM B 75. Cast copper alloy solder-joint pressure fittings shall conform to ASME B16.18 and ASTM B 828.

2.6.6.3 Flared Fittings

Cast copper alloy fittings for flared copper tube shall conform to ASME B16.26 and ASTM B 62.

2.6.6.4 Adapters

Adapters may be used for connecting tubing to flanges and to threaded ends of valves and equipment. Extracted brazed tee joints produced with an acceptable tool and installed as recommended by the manufacturer may be used.

2.6.6.5 Threaded Fittings

Cast bronze threaded fittings shall conform to ASME B16.15.

2.6.6.6 Brazing Material

Brazing material shall conform to AWS A5.8.

2.6.6.7 Brazing Flux

Flux shall be in paste or liquid form appropriate for use with brazing material. Flux shall be as follows: lead-free; have a 100 percent flushable residue; contain slightly acidic reagents; contain potassium borides, and contain fluorides. Silver brazing materials shall be in accordance with AWS A5.8.

2.6.6.8 Solder Material

Solder metal shall conform to ASTM B 32 95-5 tin-antimony.

2.6.6.9 Solder Flux

Flux shall be liquid form, non-corrosive, and conform to ASTM B 813, Standard Test 1.

2.6.7 Dielectric Unions

Dielectric unions shall have metal connections on both ends. The ends shall be threaded, flanged, or brazed to match adjacent piping. Metal parts of the union shall be separated so that the electrical current is below 1 percent of the galvanic current which would exist upon metal-to-metal contact.

2.6.8 Flexible Pipe Connectors

Flexible pipe connectors shall be designed for 861.8 kPa or 1034.2 kPa service. Connectors shall be installed where indicated. The flexible section shall be constructed of rubber, tetrafluoroethylene resin, or corrosion-resisting steel, bronze, monel, or galvanized steel. Materials used and the configuration shall be suitable for the pressure, vacuum, and temperature medium. The flexible section shall be suitable for service intended and may have threaded, welded, soldered, flanged, or socket ends. Flanged assemblies shall be equipped with limit bolts to restrict maximum travel to the manufacturer's standard limits. Unless otherwise indicated, the length of the flexible connectors shall be as recommended by the manufacturer for the service intended. Internal sleeves or liners, compatible with circulating medium, shall be provided when recommended by the manufacturer. Covers to protect the bellows shall be provided where indicated.

2.6.9 Pipe Supports

Pipe supports shall conform to MSS SP-58 and MSS SP-69.

2.6.10 Pipe Expansion

2.6.10.1 Expansion Loops

Expansion loops and offsets shall provide adequate expansion of the main straight runs of the system within the stress limits specified in ASME B31.1. The loops and offsets shall be cold-sprung and installed where indicated. Pipe guides and anchors shall be provided as indicated.

2.6.11 Valves

Valves shall be Class 125 and shall be suitable for the application. Grooved ends per AWWA C606 may be used for water service only. Valves in nonboiler external piping shall meet the material, fabrication and operating requirements of ASME B31.1. The connection type of all valves shall match the same type of connection required for the piping on which installed.

2.6.11.1 Gate Valves

Gate valves 65 mm and smaller shall conform to MSS SP-80 bronze rising stem, threaded, solder, or flanged ends. Gate valves 80 mm and larger shall conform to MSS SP-70 cast iron bronze trim, outside screw and yoke, flanged, or threaded ends.

2.6.11.2 Globe Valves

Globe valves 65 mm and smaller shall conform to MSS SP-80, bronze, threaded, soldered, or flanged ends. Globe valves 80 mm and larger shall conform to MSS SP-85, cast iron, bronze trim, flanged, or threaded ends.

2.6.11.3 Check Valves

Check valves 65 mm and smaller shall conform to MSS SP-80, bronze, threaded, soldered, or flanged ends. Check valves 80 mm and larger shall conform to MSS SP-71, cast iron, bronze trim, flanged, or threaded ends.

2.6.11.4 Angle Valves

Angle valves 65 mm and smaller shall conform to MSS SP-80 bronze, threaded, soldered, or flanged ends. Angle valves 80 mm and larger shall conform to MSS SP-85, cast iron, bronze trim, flanged, or threaded ends.

2.6.11.5 Ball Valves

Ball valves 15 mm and larger shall conform to MSS SP-72 or MSS SP-110, ductile iron or bronze, threaded, soldered, or flanged ends.

2.6.11.6 Plug Valves

Plug valves 51 mm and larger shall conform to MSS SP-78. Plug valves smaller than 51 mm shall conform to ASME B16.34.

2.6.11.7 Balancing Valves

Balancing valves shall have meter connections with positive shutoff valves. An integral pointer shall register the degree of valve opening. Valves shall be calibrated so that flow rate can be determined when valve opening in degrees and pressure differential across valve is known. Each balancing valve shall be constructed with internal seals to prevent leakage and shall be supplied with preformed insulation. Valves shall be suitable for 120 degrees C temperature and working pressure of the pipe in which installed. Valve bodies shall be provided with tapped openings and pipe extensions with shutoff valves outside of pipe insulation. The pipe extensions shall be provided with quick connecting hose fittings for a portable meter to measure the pressure differential. One portable differential meter shall be furnished. The meter suitable for the operating pressure specified shall be

complete with hoses, vent, and shutoff valves, and carrying case. In lieu of the balancing valve with integral metering connections, a ball valve or plug valve with a separately installed orifice plate or venturi tube may be used for balancing.

2.6.11.8 Automatic Flow Control Valves

In lieu of the specified balancing valves, automatic flow control valves may be provided to maintain constant flow and shall be designed to be sensitive to pressure differential across the valve to provide the required opening. Valves shall be selected for the flow required and provided with a permanent nameplate or tag carrying a permanent record of the factory-determined flow rate and flow control pressure levels. Valves shall control the flow within 5 percent of the tag rating. Valves shall be suitable for the maximum operating pressure of 850 kPa or 150 percent of the system operating pressure, whichever is greater. Where the available system pressure is not adequate to provide the minimum pressure differential that still allows flow control, the system pump head capability shall be increased. Valves shall be suitable for 120 degrees C temperature service. Valve materials shall be same as specified for the heating system check, globe, angle, and gate valves. Valve operator shall be the electric motor type or pneumatic type as applicable. Valve operator shall be capable of positive shutoff against the system pump head. Valve bodies shall be provided with tapped openings and pipe extensions with shutoff valves outside of pipe insulation. The pipe extensions shall be provided with quick connecting hose fittings for a portable meter to measure the pressure differential across the automatic flow control valve. A portable meter shall be provided with accessory kit as recommended for the project by the automatic valve manufacturer.

2.6.11.9 Butterfly Valves

Butterfly valves shall be 2-flange type or lug wafer type, and shall be bubbletight at 1135 kPa. Valve bodies shall be cast iron, malleable iron, or steel. ASTM A 167, Type 404 or Type 316, corrosion resisting steel stems, bronze, or corrosion resisting steel discs, and synthetic rubber seats shall be provided. Valves smaller than 200 mm shall have throttling handles with a minimum of seven locking positions. Valves 200 mm and larger shall have totally enclosed manual gear operators with adjustable balance return stops and position indicators. Valves in insulated lines shall have extended neck to accommodate insulation thickness.

2.6.11.10 Drain valves

Drain valves shall be provided at each drain point of blowdown as recommended by the boiler manufacturer. Piping shall conform to ASME BPV IV and ASTM A 53.

2.6.11.11 Safety Valves

Safety valves shall have steel bodies and shall be equipped with corrosion-resistant trim and valve seats. The valves shall be properly guided and shall be positive closing so that no leakage can occur. Adjustment of the desired back-pressure shall cover the range between 15 and 70 kPa. The adjustment shall be made externally, and any shafts extending through the valve body shall be provided with adjustable stuffing boxes having renewable packing. Boiler safety valves of proper size and of the required number, in accordance with ASME BPV IV, shall be installed so that the discharge will

be through piping extended to a location as indicated. Each discharge pipe for hot water service shall be pitched away from the valve seat.

2.6.12 Strainers

Basket and "Y" type strainers shall be the same size as the pipelines in which they are installed. The strainer bodies shall be heavy and durable, fabricated of cast iron, and shall have bottoms drilled and tapped with a gate valve attached for blowdown purposes. Strainers shall be designed for 862 kPa service and 120 degrees C. The bodies shall have arrows clearly cast on the sides indicating the direction of flow. Each strainer shall be equipped with an easily removable cover and sediment screen. The screen shall be made of 0.795 mm thick monel with small perforations numbering not less than 620,000 per square m to provide a net free area through the basket of at least 3.30 times that of the entering pipe. The flow shall be into the screen and out through the perforations.

2.6.13 Pressure Gauges

Gauges shall conform to ASME B40.1 and shall be provided with throttling type needle valve or a pulsation dampener and shutoff valve. Minimum dial size shall be 90 mm. A pressure gauge shall be provided for each boiler in a visible location on the boiler.

2.6.14 Thermometers

Thermometers shall be provided with wells and separable corrosion-resistant steel sockets. Thermometers for inlet water and outlet water for each hot water boiler shall be provided in a visible location on the boiler. Thermometers shall have brass, malleable iron, or aluminum alloy case and frame, clear protective face, permanently stabilized glass tube with indicating-fluid column, white face, black numbers, and a minimum 225 mm scale.

2.6.15 Air Vents

2.6.15.1 Manual Air Vents

Manual air vents shall be brass or bronze valves or cocks suitable for the pressure rating of the piping system and furnished with threaded plugs or caps.

2.6.15.2 Automatic Air Vents

Automatic air vents shall be 20 mm quick-venting float and vacuum air valves. Each air vent valve shall have a large port permitting the expulsion of the air without developing excessive back pressure, a noncollapsible metal float which will close the valve and prevent the loss of water from the system, an air seal that will effectively close and prevent the re-entry of air into the system when subatmospheric pressures prevail therein, and a thermostatic member that will close the port against the passage of steam from the system. The name of the manufacturer shall be clearly stamped on the outside of each valve. The air vent valve shall be suitable for the pressure rating of the piping system.

2.6.16 Steam Humidifier

Each humidifier shall consist of a steam supply header/separator, a condensate collection header and a bank of closely spaced steam dispersion tubes spanning the distance between the two headers. Each tube shall be fitted with two rows of steam discharge tubelets inserted into the tube wall centered on the diametric line and spaced apart. These tublets shall be make of a non-metallic material designed for steam temperatures. The two rows shall discharge steam in diametrically opposite directions. Each tubelet shall contain a steam orifice sized for its required steam capacity. The humidifier shall provide absorption characteristics that preclude water accumulation on any in-duct surfaces within 400 mm downstream of the humidifier tube panel while maintaining conditions of 90 percent (maximum) relative humidity at a minimum temperature of 8.3 degrees C in the duct air stream. Air pressure loss across humidifier panel shall not exceed 10 Pa at a duct air velocity of 3.1 m/s.

Each packaged humidifier panel assembly of tubes and headers shall be contained within a galvanized metal casing to allow convenient mounting in air handler casings.

All tubes and headers shall be of 304 stainless steel and joints shall be heli-arc welded. Tubes shall be joined to headers with slip fit couplers.

2.7 ELECTRICAL EQUIPMENT

Electric motor-driven equipment shall be provided complete with motors, motor starters, and necessary control devices. Electrical equipment, motor control devices, motor efficiencies and wiring shall be as specified in Section 16415 ELECTRICAL WORK, INTERIOR. Motors which are not an integral part of a packaged boiler shall be rated for standard high efficiency service. Motors which are an integral part of the packaged boiler shall be the highest efficiency available by the manufacturer of the packaged boiler. Motor starters shall be provided complete with properly sized thermal overload protections and other appurtenances necessary for the motor control specified. Starters shall be furnished in general purpose enclosures. Manual or automatic control and protective or signal devices required for the operation specified and any control wiring required for controls and devices but not shown shall be provided.

2.7.1 Motor Ratings

Motors shall be suitable for the voltage and frequency provided. Motors 375 W and larger shall be three-phase, unless otherwise indicated. Motors shall be of sufficient capacity to drive the equipment at the specified capacity without exceeding the nameplate rating on the motor.

2.7.2 Motor Controls

Motor controllers shall be provided complete with properly sized thermal overload protection. Manual or automatic control and protective or signal devices required for the operation specified and any wiring required to such devices shall be provided. Where two-speed or variable-speed motors are indicated, solid-state variable-speed controllers may be provided to accomplish the same function. Solid state variable speed controllers shall be utilized for fractional through 7.46 kW ratings. Adjustable frequency drives shall be used for larger motors.

2.8 INSULATION

Shop and field-applied insulation shall be as specified in Section 15250 THERMAL INSULATION FOR MECHANICAL SYSTEMS.

2.9 TOOLS

Special tools shall be furnished. Special tools shall include uncommon tools necessary for the operation and maintenance of boilers, burners, pumps, fans, controls, meters, special piping systems, and other equipment. Small hand tools shall be furnished within a suitable cabinet, mounted where directed.

2.9.1 Breeching Cleaner

A cleaner shall be provided to clean the breeching. The cleaner shall have a jointed handle of sufficient length to clean the breeching without dismantling.

2.9.2 Tube Cleaner

If a watertube boiler is being furnished, a water-driven tube cleaner with three rotary cutters and rotary wire brush complete with the necessary length of armored water hose, valves, and other appurtenances necessary for operation shall be provided. Tube cleaner and rotary brush shall be provided for each size of water tube in the boiler, with one extra set of cutters for each size cleaner. Necessary valves and fittings shall be provided to permit ready connection of the cleaner hose to a high-pressure pump for cold water supply to operate the cleaner.

2.9.3 Tube Brush

If a firetube boiler is being furnished, a tube brush, with steel bristles and jointed handle of sufficient length to clean full length of firetubes, shall be provided.

2.9.4 Wrenches

Wrenches shall be provided as required for specialty fittings such as manholes, handholes, and cleanouts. One set of extra gaskets shall be provided for all manholes and handholes, for pump barrels, and other similar items of equipment. Gaskets shall be packaged and properly identified.

2.10 BOILER WATER TREATMENT

The water treatment system shall be capable of feeding chemicals and bleeding the system to prevent corrosion and scale within the boiler and piping distribution system. The water shall be treated to maintain the conditions recommended by the boiler manufacturer. Chemicals shall meet required federal, state, and local environmental regulations for the treatment of boilers and discharge to the sanitary sewer. The services of a company regularly engaged in the treatment of boilers shall be used to determine the correct chemicals and concentrations required for water treatment. The company shall maintain the chemical treatment and provide all chemicals required for a period of 1 year from the date of occupancy. Filming amines and proprietary chemicals shall not be used. The water

treatment chemicals shall remain stable throughout the operating temperature range of the system and shall be compatible with pump seals and other elements of the system.

2.10.1 Chemical Shot Feeder

A shot feeder shall be provided as indicated. Size and capacity of feeder shall be based upon local requirements and water analysis. The feeder shall be furnished with an air vent, gauge glass, funnel, valves, fittings, and piping.

2.10.2 Chemical Piping

The piping and fittings shall be constructed of stainless steel.

2.10.3 Test Kits

One test kit of each type required to determine the water quality as outlined within the operation and maintenance manuals shall be provided.

PART 3 EXECUTION

3.1 ERECTION OF BOILER AND AUXILIARY EQUIPMENT

Boiler and auxiliary equipment shall be installed in accordance with manufacturer's written instructions.

3.2 PIPING INSTALLATION

Unless otherwise specified, nonboiler external pipe and fittings shall conform to the requirements of ASME B31.1. Pipe installed shall be cut accurately to suit field conditions, shall be installed without springing or forcing, and shall properly clear windows, doors, and other openings. Cutting or other weakening of the building structure to facilitate piping installation will not be permitted. Pipes shall be free of burrs, oil, grease and other foreign material and shall be installed to permit free expansion and contraction without damaging the building structure, pipe, pipe joints, or pipe supports. Changes in direction shall be made with fittings, except that bending of pipe 100 mm and smaller will be permitted provided a pipe bender is used and wide sweep bends are formed. The centerline radius of bends shall not be less than 6 diameters of the pipe. Bent pipe showing kinks, wrinkles, flattening, or other malformations will not be accepted. Vent pipes shall be carried through the roof as directed and shall be properly flashed. Unless otherwise indicated, horizontal supply mains shall pitch down in the direction of flow with a grade of not less than 0.2 percent. Open ends of pipelines and equipment shall be properly capped or plugged during installation to keep dirt or other foreign materials out of the systems. Pipe not otherwise specified shall be uncoated. Unless otherwise specified or shown, final connections to equipment shall be made with malleable-iron unions for steel pipe 65 mm or less in diameter and with flanges for pipe 80 mm or more in diameter. Unions for copper pipe or tubing shall be brass or bronze. Reducing fittings shall be used for changes in pipe sizes. In horizontal hot water lines, reducing fittings shall be eccentric type to maintain the top of the lines at the same level to prevent air binding.

3.2.1 Cold Water Connections

Cold water fill connections shall be made to the water supply system as indicated. Necessary pipe, fittings, and valves required for water connections between the boiler and cold water main shall be provided as shown. The pressure regulating valve shall be of a type that will not stick or allow pressure to build up on the low side. The valve shall be set to maintain a terminal pressure of approximately 35 kPa in excess of the static head on the system and shall operate within a 15 kPa tolerance regardless of cold water supply piping pressure and without objectionable noise under any condition of operation.

3.2.2 Hot Water Piping and Fittings

Pipe shall be black steel or copper tubing. Fittings for steel piping shall be black malleable iron or cast iron to suit piping. Fittings adjacent to valves shall suit valve material. Grooved mechanical fittings will not be allowed.

3.2.3 Steam Piping and Fittings

Piping shall be black steel. Fittings shall be black, malleable iron, cast iron or steel. Fittings adjacent to valves shall suit valves specified. Grooved mechanical fittings will not be allowed for steam piping.

3.2.4 Condensate Return Pipe and Fittings

Piping shall be black steel. Fittings shall be malleable iron, cast iron, or steel. Grooved mechanical fittings will not be allowed for condensate piping.

3.2.5 Vent Piping and Fittings

Vent piping shall be black steel. Fittings shall be black malleable iron or cast iron to suit piping.

3.2.6 Gauge Piping

Piping shall be copper tubing.

3.2.7 Joints

Joints between sections of steel pipe and between steel pipe and fittings shall be threaded, flanged or welded as indicated or specified. Except as otherwise specified, fittings 25 mm and smaller shall be threaded; fittings 32 mm and up to but not including 80 mm shall be either threaded, grooved, or welded; and fittings 80 mm and larger shall be either flanged, grooved, or welded. Pipe and fittings 32 mm and larger installed in inaccessible conduit or trenches beneath concrete floor slabs shall be welded. Connections to equipment shall be made with black malleable-iron unions for pipe 65 mm or smaller in diameter and with flanges for pipe 80 mm inches or larger in diameter. Joints between sections of copper tubing or pipe shall be flared, soldered, or brazed.

3.2.7.1 Threaded Joints

Threaded joints shall be made with tapered threads properly cut and shall be made perfectly tight with a stiff mixture of graphite and oil or with polytetrafluoroethylene tape applied to the male threads only and in no case to the fittings.

3.2.7.2 Welded Joints

Welded joints shall be in accordance with paragraph GENERAL REQUIREMENTS unless otherwise specified. Changes in direction of piping shall be made with welding fittings only; mitering or notching pipe to form elbows and tees or other similar type construction will not be permitted. Branch connections may be made with either welding tees or forged branch outlet fittings, either being acceptable without size limitation. Branch outlet fittings, where used, shall be forged, flared for improved flow characteristics where attached to the run, reinforced against external strains, and designed to withstand full pipe bursting strength. Socket weld joints shall be assembled so that the space between the end of the pipe and the bottom of the socket is no less than 1.5 mm and no more than 3 mm.

3.2.7.3 Flared and Brazed Copper Pipe and Tubing

Tubing shall be cut square, and burrs shall be removed. Both inside of fittings and outside of tubing shall be cleaned thoroughly with sand cloth or steel wire brush before brazing. Annealing of fittings and hard-drawn tubing shall not occur when making connections. Installation shall be made in accordance with the manufacturer's recommendations. Mitering of joints for elbows and notching of straight runs of pipe for tees will not be permitted. Brazed joints shall be made in conformance with AWS B2.2, MSS SP-73, and CDA 404/0 RR with flux. Copper-to-copper joints shall include the use of copper-phosphorous or copper-phosphorous-silver brazing metal without flux. Brazing of dissimilar metals (copper to bronze or brass) shall include the use of flux with either a copper-phosphorous, copper-phosphorous-silver or a silver brazing filler metal. Joints for flared fittings shall be of the compression pattern. Swing joints or offsets shall be provided in all branch connections, mains, and risers to provide for expansion and contraction forces without undue stress to the fittings or to short lengths of pipe or tubing. Flared or brazed copper tubing to pipe adapters shall be provided where necessary for joining threaded pipe to copper tubing.

3.2.7.4 Soldered Joints

Soldered joints shall be made with flux and are only acceptable for lines 50 mm and smaller. Soldered joints shall conform to ASME B31.5 and CDA 404/0 RR.

3.2.7.5 Copper Tube Extracted Joint

An extruded mechanical tee joint may be made in copper tube. Joint shall be produced with an appropriate tool by drilling a pilot hole and drawing out the tube surface to form a collar having a minimum height of three times the thickness of the tube wall. To prevent the branch tube from being inserted beyond the depth of the extracted joint, dimpled depth stops shall be provided. The branch tube shall be notched for proper penetration into fitting to assure a free flow joint. Extracted joints shall be brazed using

a copper phosphorous classification brazing filler metal. Soldered joints will not be permitted.

3.2.8 Flanges and Unions

Flanges shall be faced true, provided with 1.6 mm thick gaskets, and made square and tight. Where steel flanges mate with cast-iron flanged fittings, valves, or equipment, they shall be provided with flat faces and full face gaskets. Union or flange joints shall be provided in each line immediately preceding the connection to each piece of equipment or material requiring maintenance such as coils, pumps, control valves, and other similar items. Dielectric pipe unions shall be provided between ferrous and nonferrous piping to prevent galvanic corrosion. The dielectric unions shall have metal connections on both ends. The ends shall be threaded, flanged, or brazed to match adjacent piping. The metal parts of the union shall be separated so that the electrical current is below 1 percent of the galvanic current which would exist upon metal-to-metal contact. Gaskets, flanges, and unions shall be installed in accordance with manufacturer's recommendations.

3.2.9 Branch Connections

3.2.9.1 Branch Connections for Hot Water Systems

Branches from the main shall pitch up or down as shown to prevent air entrapment. Connections shall ensure unrestricted circulation, eliminate air pockets, and permit complete drainage of the system. Branches shall pitch with a grade of not less than 8 mm in 1 m. When indicated, special flow fittings shall be installed on the mains to bypass portions of the water through each radiator. Special flow fittings shall be standard catalog products and shall be installed as recommended by the manufacturer.

3.2.10 Steam Connections to Equipment

Steam supply and return connections shall be provided as shown. Connections shall be made with malleable-iron unions or with steel flanges, to match equipment. Valves and traps shall be installed in accordance with the manufacturer's recommendations. The size of the supply and return pipes to each piece of equipment shall not be smaller than the outlets on the equipment.

3.2.11 Steam Risers

The location of risers is approximate. The exact locations of the risers shall be approved. Downfeed risers shall terminate in a dirt pocket and shall be dripped through a trap to the floor drain.

3.2.12 Air Vents for Steam Systems

Automatic balanced pressure thermostatic air vents shall be installed at the ends of the steam lines and where shown on the drawings. The vents shall be rated for 862 kPa steam service. The outlet of the vent shall be routed to a point designated by the Contracting Officer's Representative. The inlet line shall have a gate valve or ball valve.

3.2.13 Flared, Brazed, and Soldered Copper Pipe and Tubing

Copper tubing shall be flared, brazed, or soldered. Tubing shall be cut square, and burrs shall be removed. Both inside of fittings and outside of tubing shall be cleaned thoroughly with sand cloth or steel wire brush before brazing. Annealing of fittings and hard-drawn tubing shall not occur when making connections. Installation shall be made in accordance with the manufacturer's recommendations. Mitering of joints for elbows and notching of straight runs of pipe for tees will not be permitted. Joints for flared fittings shall be of the compression pattern. Swing joints or offsets shall be provided on branch connections, mains, and risers to provide for expansion and contraction forces without undue stress to the fittings or to short lengths of pipe or tubing. Pipe adapters shall be provided where necessary for joining threaded pipe to copper tubing. Brazed joints shall be made in conformance with MSS SP-73, and CDA 404/0 RR. Copper-to-copper joints shall include the use of copper-phosphorous or copper-phosphorous-silver brazing metal without flux. Brazing of dissimilar metals (copper to bronze or brass) shall include the use of flux with either a copper-phosphorous, copper-phosphorous-silver, or a silver brazing filler metal. Soldered joints shall be made with flux and are only acceptable for lines 50 mm or smaller. Soldered joints shall conform to ASME B31.5 and shall be in accordance with CDA 404/0 RR.

3.2.14 Copper Tube Extracted Joint

An extracted mechanical tee joint may be made in copper tube. Joint shall be produced with an appropriate tool by drilling a pilot hole and drawing out the tube surface to form a collar having a minimum height of three times the thickness of the tube wall. To prevent the branch tube from being inserted beyond the depth of the extracted joint, dimpled depth stops shall be provided. The branch tube shall be notched for proper penetration into fitting to assure a free flow joint. Extracted joints shall be brazed using a copper phosphorous classification brazing filler metal. Soldered joints will not be permitted.

3.2.15 Supports

3.2.15.1 General

Hangers used to support piping 50 mm and larger shall be fabricated to permit adequate adjustment after erection while still supporting the load. Pipe guides and anchors shall be installed to keep pipes in accurate alignment, to direct the expansion movement, and to prevent buckling, swaying, and undue strain. Piping subjected to vertical movement when operating temperatures exceed ambient temperatures shall be supported by variable spring hangers and supports or by constant support hangers.

3.2.15.2 Seismic Requirements for Supports and Structural Bracing

Piping and attached valves shall be supported and braced to resist seismic loads as specified in Section 13083 SEISMIC PROTECTION FOR MECHANICAL, ELECTRICAL EQUIPMENT. Structural steel required for reinforcement to properly support piping, headers, and equipment, but not shown, shall be provided in this section. Material used for supports shall be as specified in Section 05120 STRUCTURAL STEEL.

3.2.15.3 Pipe Hangers, Inserts, and Supports

Pipe hangers, inserts, and supports shall conform to MSS SP-58 and MSS SP-69, except as modified herein.

a. Types 5, 12, and 26 shall not be used.

b. Type 3 shall not be used on insulated pipe which has a vapor barrier. Type 3 may be used on insulated pipe that does not have a vapor barrier if clamped directly to the pipe, if the clamp bottom does not extend through the insulation, and if the top clamp attachment does not contact the insulation during pipe movement.

c. Type 18 inserts shall be secured to concrete forms before concrete is placed. Continuous inserts which allow more adjustment may be used if they otherwise meet the requirements for Type 18 inserts.

d. Type 19 and 23 C-clamps shall be torqued per MSS SP-69 and have both locknuts and retaining devices furnished by the manufacturer. Field fabricated C-clamp bodies or retaining devices are not acceptable.

e. Type 20 attachments used on angles and channels shall be furnished with an added malleable-iron heel plate or adapter.

f. Type 24 may be used only on trapeze hanger systems or on fabricated frames.

g. Horizontal pipe supports shall be spaced as specified in MSS SP-69 and a support shall be installed not over 300 mm from the pipe fitting joint at each change in direction of the piping. Pipe supports shall be spaced not over 1500 mm apart at valves.

h. Vertical pipe shall be supported at each floor, except at slab-on-grade, and at intervals of not more than 4500 mm, not more than 2400 mm from end of risers, and at vent terminations.

i. Type 35 guides using steel, reinforced polytetrafluoroethylene (PTFE) or graphite slides shall be provided where required to allow longitudinal pipe movement. Lateral restraints shall be provided as required. Slide materials shall be suitable for the system operating temperatures, atmospheric conditions, and bearing loads encountered.

(1) Where steel slides do not require provisions for restraint of lateral movement, an alternate guide method may be used. On piping 100 mm and larger, a Type 39 saddle may be welded to the pipe and freely rested on a steel plate. On piping under 100 mm, a Type 40 protection shield may be attached to the pipe or insulation and freely rested on a steel slide plate.

(2) Where there are high system temperatures and welding to piping is not desirable, the Type 35 guide shall include a pipe cradle welded to the guide structure and strapped securely to the pipe. The pipe shall be separated from the slide material by at least 100 mm or by an amount adequate for the insulation, whichever is greater.

j. Except for Type 3, pipe hangers on horizontal insulated pipe shall be the size of the outside diameter of the insulation.

k. Piping in trenches shall be supported as indicated.

l. Structural steel attachments and brackets required to support piping, headers, and equipment, but not shown, shall be provided under this section. Material and installation shall be as specified under Section 05120 STRUCTURAL STEEL. Pipe hanger loads suspended from steel joist between panel points shall not exceed 22 kg. Loads exceeding 22 kg shall be suspended from panel points.

3.2.15.4 Multiple Pipe Runs

In the support of multiple pipe runs on a common base member, a clip or clamp shall be used where each pipe crosses the base support member. Spacing of the base support member shall not exceed the hanger and support spacing required for any individual pipe in the multiple pipe run. The clips or clamps shall be rigidly attached to the common base member. A clearance of 3 mm shall be provided between the pipe insulation and the clip or clamp for piping which may be subjected to thermal expansion.

3.2.16 Anchors

Anchors shall be provided where necessary to localize expansion or to prevent undue strain on piping. Anchors shall consist of heavy steel collars with lugs and bolts for clamping and attaching anchor braces, unless otherwise indicated. Anchor braces shall be installed in the most effective manner to secure the desired results, using turnbuckles where required. Supports, anchors, or stays shall not be attached where they will injure the structure or adjacent construction during installation or by the weight of expansion of the pipeline.

3.2.17 Valves

Valves shall be installed where indicated, specified, and required for functioning and servicing of the systems. Valves shall be safely accessible. Swing check valves shall be installed upright in horizontal lines and in vertical lines only when flow is in the upward direction. Gate and globe valves shall be installed with stems horizontal or above. Valves to be brazed shall be disassembled prior to brazing and all packing removed. After brazing, the valves shall be allowed to cool before reassembling.

3.2.18 Pipe Sleeves

Pipe passing through concrete or masonry walls or concrete floors or roofs shall be provided with pipe sleeves fitted into place at the time of construction. A waterproofing clamping flange shall be installed as indicated where membranes are involved. Sleeves shall not be installed in structural members except where indicated or approved. Rectangular and square openings shall be as detailed. Each sleeve shall extend through its respective wall, floor, or roof. Sleeves through walls shall be cut flush with wall surface. Sleeves through floors shall be cut flush with floor surface. Sleeves through roofs shall extend above the top surface of roof at least 150 mm for proper flashing or finishing. Unless otherwise indicated, sleeves shall be sized to provide a minimum clearance of 6 mm

between bare pipe and sleeves or between jacket over insulation and sleeves. Sleeves in waterproofing membrane floors, bearing walls, and wet areas shall be galvanized steel pipe or cast-iron pipe. Sleeves in nonbearing walls, floors, or ceilings may be galvanized steel pipe, cast-iron pipe, or galvanized sheet metal with lock-type longitudinal seam. Except in pipe chases or interior walls, the annular space between pipe and sleeve or between jacket over insulation and sleeve in nonfire rated walls shall be sealed as indicated and specified in Section 07920 JOINT SEALING. Metal jackets shall be provided over insulation passing through exterior walls, firewalls, fire partitions, floors, or roofs.

Metal jackets shall not be thinner than 0.1524 mm thick aluminum, if corrugated, and 0.4 mm thick aluminum, if smooth.

Metal jackets shall be secured with aluminum or stainless steel bands not less than 9 mm wide and not more than 200 mm apart. When penetrating roofs and before fitting the metal jacket into place, a 15 mm wide strip of sealant shall be run vertically along the inside of the longitudinal joint of the metal jacket from a point below the backup material to a minimum height of 1000 mm above the roof. If the pipe turns from vertical to horizontal, the sealant strip shall be run to a point just beyond the first elbow. When penetrating waterproofing membrane for floors, the metal jacket shall extend from a point below the back-up material to a minimum distance of 50 mm above the flashing. For other areas, the metal jacket shall extend from a point below the backup material to a point 300 mm above material to a minimum distance of 50 mm above the flashing. For other areas, the metal jacket shall extend from a point below the backup material to a point 300 mm above the floor; when passing through walls above grade, the jacket shall extend at least 100 mm beyond each side of the wall.

3.2.18.1 Fire Seal

Where pipes pass through firewalls, fire partitions, or floors, a fire seal shall be provided as specified in Section 07270 FIRESTOPPING.

3.2.19 Balancing Valves

Balancing valves shall be installed as indicated.

3.2.20 Thermometer Wells

A thermometer well shall be provided in each return line for each circuit in multicircuit systems.

3.2.21 Air Vents

Air vents shall be installed where shown or directed. Air vents shall be installed in piping at all system high points. The vent shall remain open until water rises in the tank or pipe to a predetermined level at which time it shall close tight. An overflow pipe from the vent shall be run to a point designated by the Contracting Officer's representative. The inlet to the air vent shall have a gate valve or ball valve.

3.2.22 Escutcheons

Escutcheons shall be provided at all finished surfaces where exposed piping, bare or insulated, passes through floors, walls, or ceilings except in

boiler, utility, or equipment rooms. Escutcheons shall be fastened securely to pipe or pipe covering and shall be chromium-plated iron or chromium-plated brass, either one-piece or split pattern, held in place by internal spring tension or setscrews.

3.2.23 Drains

A drain connection with a 25 mm gate valve or 20 mm hose bib shall be installed at the lowest point in the return main near the boiler. In addition, threaded drain connections with threaded cap or plug shall be installed on the heat exchanger coil on each unit heater or unit ventilator and wherever required for thorough draining of the system.

3.2.24 Strainer Blow-Down Piping

Strainer blow-down connections shall be fitted with a black steel blow-down pipeline routed to an accessible location and provided with a blow-down valve.

3.3 GAS FUEL SYSTEM

Gas piping, fittings, valves, regulators, tests, cleaning, and adjustments shall be in accordance with the Section 15488 GAS PIPING SYSTEMS. NFPA 54 shall be complied with unless otherwise specified. Burners, pilots, and all accessories shall be listed in UL-06. The fuel system shall be provided with a gas tight, manually operated, UL listed stop valve at the gas-supply connections, a gas strainer, a pressure regulator, pressure gauges, a burner-control valve, a safety shutoff valve suitable for size of burner and sequence of operation, and other components required for safe, efficient, and reliable operation as specified. Approved permanent and ready facilities to permit periodic valve leakage tests on the safety shutoff valve or valves shall be provided.

3.4 FIELD PAINTING

Ferrous metal not specified to be coated at the factory shall be cleaned, prepared, and painted as specified in Section 09900 PAINTING, GENERAL. Exposed pipe covering shall be painted as specified in Section 09900PAINTING, GENERAL. Aluminum sheath over insulation shall not be painted.

3.5 HEATING SYSTEM TESTS

Before any covering is installed on pipe or heating equipment, the entire heating system's piping, fittings, and terminal heating units shall be hydrostatically tested and proved tight at a pressure of 1-1/2 times the design working pressure. Before pressurizing system for test, items or equipment (e.g., vessels, pumps, instruments, controls, relief valves) rated for pressures below the test pressure shall be blanked off or replaced with spool pieces. Before balancing and final operating test, test blanks and spool pieces shall be removed; and protected instruments and equipment shall be reconnected. With equipment items protected, the system shall be pressurized to test pressure. Pressure shall be held for a period of time sufficient to inspect all welds, joints, and connections for leaks, but not less than 2 hours. No loss of pressure will be allowed. Leaks shall be repaired and repaired joints shall be retested. Caulking of joints shall not be permitted. System shall be drained and after instruments and

equipment are reconnected, the system shall be refilled with service medium and maximum operating pressure applied. The pressure shall be held while inspecting these joints and connections for leaks. The leaks shall be repaired and the repaired joints retested. Upon completion of hydrostatic tests and before acceptance of the installation, the Contractor shall balance the heating system in accordance with Section 15990 TESTING, ADJUSTING AND BALANCING OF HVAC SYSTEMS; and operating tests required to demonstrate satisfactory functional and operational efficiency shall be performed. The operating test shall cover a period of at least 24 hours for each system, and shall include, as a minimum, the following specific information in a report, together with conclusions as to the adequacy of the system:

a. Certification of balancing.

b. Time, date, and duration of test.

c. Outside and inside dry bulb temperatures.

d. Temperature of hot water supply leaving boiler and steam pressure.

e. Temperature of heating return water from system at boiler inlet.

f. Boiler make, type, serial number, design pressure, and rated capacity.

g. Fuel burner make, model, and rated capacity; ammeter and voltmeter readings for burner motor.

h. Circulating pump make, model, and rated capacity, and ammeter and voltmeter readings for pump motor during operation.

i. Flue-gas temperature at boiler outlet.

j. Percent carbon dioxide in flue-gas.

k. Grade or type and calorific value of fuel.

l. Draft at boiler flue-gas exit.

m. Draft or pressure in furnace.

n. Quantity of water circulated.

o. Quantity of fuel consumed.

p. Stack emission pollutants concentration.

Indicating instruments shall be read at half-hour intervals unless otherwise directed. The Contractor shall furnish all instruments, equipment, and personnel required for the tests and balancing. Fuels, water, and electricity shall be obtained as specified in the SPECIAL CONTRACT REQUIREMENTS. Operating tests shall demonstrate that fuel burners and combustion and safety controls meet the requirements of ASME CSD-1.

3.5.1 Water Treatment Testing

3.5.1.1 Water Quality Test

The boiler water shall be analyzed prior to the acceptance of the facility by the water treatment company. The analysis shall include the following information recorded in accordance with ASTM D 596.

Date of Sample	_____	
Temperature	_____	degrees C
Silica (SiO2)	_____	mg/1
Insoluble	_____	mg/1
Iron and Aluminum Oxides	_____	mg/1
Calcium (Ca)	_____	mg/1
Magnesium (Mg)	_____	mg/1
Sodium and Potassium (Na and K)	_____	mg/1
Carbonate (HCO3)	_____	mg/1
Sulfate (SO4)	_____	mg/1
Chloride (C1)	_____	mg/1
Nitrate (NO3)	_____	mg/1
Turbidity	_____	unit
pH	_____	
Residual Chlorine	_____	mg/1
Total Alkalinity	_____	meq/1
Noncarbonate Hardness	_____	meq/1
Total Hardness	_____	meq/1
Dissolved Solids	_____	mg/1
Fluorine	_____	mg/1
Conductivity	_____	microhm/cm

If the boiler water is not in conformance with the boiler manufacturer's recommendations, the water treatment company shall take corrective action.

3.5.1.2 Boiler/Piping Test

At the conclusion of the 1 year period, the boiler piping and steam shall be inspected for problems due to corrosion and scale. If the boiler is found not to conform to the manufacturer's recommendations, and the water treatment company recommendations have been followed, the water treatment company shall provide all chemicals and labor for cleaning or repairing the equipment as required by the manufacturer's recommendations.

3.6 CLEANING

3.6.1 Boilers and Piping

After the hydrostatic tests have been made and before the system is balanced and operating tests are performed, the boilers and feed water piping shall be thoroughly cleaned by filling the system with a solution consisting of either 0.5 kg of caustic soda or 0.5 kg of trisodium phosphate per 100 L of water. The proper safety precautions shall be observed in the handling and use of these chemicals. The water shall be heated to approximately 65 degrees C and the solution circulated in the system for a period of 48 hours. The system shall then be drained and thoroughly flushed out with fresh water. Strainers and valves shall be thoroughly cleaned. Prior to operating tests, air shall be removed from all water systems by operating the air vents.

3.6.2 Heating Units

Inside space heating equipment, ducts, plenums, and casing shall be thoroughly cleaned of debris and blown free of small particles of rubbish and dust and then vacuum cleaned before installing outlet faces. Equipment shall be wiped clean, with all traces of oil, dust, dirt, or paint spots removed. Temporary filters shall be provided for fans that are operated during construction, and new filters shall be installed after construction dirt has been removed from the building, and the ducts, plenum, casings, and other items specified have been vacuum cleaned. System shall be maintained in this clean condition until final acceptance. Bearings shall be properly lubricated with oil or grease as recommended by the manufacturer. Belts shall be tightened to proper tension. Control valves and other miscellaneous equipment requiring adjustment shall be adjusted to setting indicated or directed. Fans shall be adjusted to the speed indicated by the manufacturer to meet specified conditions.

3.7 FUEL SYSTEM TESTS

3.7.1 Gas System Test

The gas fuel system shall be tested in accordance with the test procedures outlined in NFPA 54.

3.8 FIELD TRAINING

The Contractor shall conduct a training course for the operating staff as designated by the Contracting Officer. The training period shall consist of a total of 8 hours of normal working time and shall start after the system is functionally completed but prior to final acceptance tests. The field instructions shall cover all of the items contained in the operating and maintenance instructions, as well as demonstrations of routine maintenance operations and boiler safety devices. The Contracting Officer shall be notified at least 14 days prior to date of proposed conduction of the training course.

End of Section

SECTION 15650

CENTRAL REFRIGERATED AIR-CONDITIONING SYSTEM
07/92

PART 1 GENERAL

1.1 REFERENCES

The publications listed below form a part of this specification to the extent referenced. The publications are referred to in the text by basic designation only.

AIR CONDITIONING AND REFRIGERATION INSTITUTE (ARI)

ARI 495	(1993) Refrigerant Liquid Receivers
~~ARI ANSI/ARI 550~~	~~(1992) Centrifugal or Rotary Screw Water-Chilling Packages~~
ARI ANSI/ARI 590	(1998~~2~~) Positive Displacement Compressor Water-Chilling Packages
ARI 700	(1995) Specifications for Fluorocarbon and Other Refrigerants

AMERICAN BEARING MANUFACTURERS ASSOCIATION (ABEMA)

ABEMA Std 9	(1990) Load Ratings and Fatigue Life for Ball Bearings
ABEMA Std 11	(1990) Load Ratings and Fatigue Life for Roller Bearings

AMERICAN SOCIETY FOR TESTING AND MATERIALS (ASTM)

ASTM A 53	(1996) Pipe, Steel, Black and Hot-Dipped, Zinc-Coated, Welded and Seamless
ASTM A 181/A181M	(1995b) Carbon Steel Forgings for General-Purpose Piping
ASTM A 193/A193M	(1996) Alloy-Steel and Stainless Steel Bolting Materials for High-Temperature Service
ASTM A 234/A234M	(1996b) Piping Fittings of Wrought Carbon Steel and Alloy Steel for Moderate and Elevated Temperatures
ASTM A 307	(1994) Carbon Steel Bolts and Studs, 60 000 PSI Tensile Strength
ASTM A 733	(1993) Welded and Seamless Carbon Steel and Austenitic Stainless Steel Pipe Nipples

ASTM B 32	<CHG>(1996) Solder Metal
ASTM B 62	(1993) Composition Bronze or Ounce Metal Castings
ASTM B 75	(1995a) Seamless Copper Tube
ASTM B 88	(1996) Seamless Copper Water Tube
ASTM B 117	(1995) Operating Salt Spray (Fog) Apparatus
ASTM B 650	(1995) Electrodeposited Engineering Chromium Coatings on Ferrous Substrates
ASTM C 534	(1994) Preformed Flexible Elastomeric Cellular Thermal Insulation in Sheet and Tubular Form
ASTM D 520	(1984; R 1989) Zinc Dust Pigment
ASTM D 3308	(1991a) PTFE Resin Skived Tape
ASTM F 104	(1993) Nonmetallic Gasket Materials
ASTM F 1199	(1988, R 1993) Cast (All Temperature and Pressures) and Welded Pipe Line Strainers (150 psig and 150 degrees F Maximum)

AMERICAN SOCIETY OF HEATING, REFRIGERATING AND AIR-CONDITIONING ENGINEERS (ASHRAE)

ASHRAE 15	(1994) Safety Code for Mechanical Refrigeration
ASHRAE 34	(1992; Addenda a-j) Number Designation and Safety Classification of Refrigerants

AMERICAN SOCIETY OF MECHANICAL ENGINEERS (ASME)

ASME B1.20.1	(1983; R 1992) Pipe Threads, General Purpose (Inch)
ASME B16.5	(1996) Pipe Flanges and Flanged Fittings
ASME B16.9	(1993) Factory-Made Wrought Steel Buttwelding Fittings
ASME B16.11	(1991) Forged Fittings, Socket-Welding and Threaded
ASME B16.18	(1984; R 1994) Cast Copper Alloy Solder Joint Pressure Fittings
ASME B16.21	(1992) Nonmetallic Flat Gaskets for Pipe Flanges

ASME B16.22	(1995) Wrought Copper and Copper Alloy Solder Joint Pressure Fittings
ASME B16.26	(1988) Cast Copper Alloy Fittings for Flared Copper Tubes
ASME B16.39	(1986; R 1994) Malleable Iron Threaded Pipe Unions Classes 150, 250, and 300
ASME B31.1	(1995) Power Piping
ASME B31.5	(1992; B31.5a) Refrigeration Piping
ASME B40.1	(1991) Gauges - Pressure Indicating Dial Type - Elastic Element
ASME BPV VIII Div 1	(1995; Addenda Dec 1995) Boiler and Pressure Vessel Code; Section VIII, Pressure Vessels Division 1 - Basic Coverage
ASME BPV IX	(1995; Addenda Dec 1995) Boiler and Pressure Vessel Code; Section IX, Welding and Brazing Qualifications

AMERICAN WELDING SOCIETY (AWS)

AWS D1.1	(1994) Structural Welding Code - Steel

EXPANSION JOINT MANUFACTURERS ASSOCIATION (EJMA)

EJMA-01	(1993) EJMA Standards

HYDRAULIC INSTITUTE (HI)

HI 1.1-1.5	(1994) Centrifugal Pumps

MANUFACTURERS STANDARDIZATION SOCIETY OF THE VALVE AND FITTINGS INDUSTRY (MSS)

MSS SP-25	(1993) Standard Marking System for Valves, Fittings, Flanges and Unions
MSS SP-58	(1993) Pipe Hangers and Supports - Materials, Design and Manufacture
MSS SP-67	(1995) Butterfly Valves
MSS SP-69	(1996) Pipe Hangers and Supports - Selection and Application
MSS SP-70	(1990) Cast Iron Gate Valves, Flanged and Threaded Ends
MSS SP-71	(1990) Cast Iron Swing Check Valves, Flanges and Threaded Ends

MSS SP-72	(1992) Ball Valves with Flanged or Butt-Welding Ends for General Service
MSS SP-78	(1987; R 1992) Cast Iron Plug Valves, Flanged and Threaded Ends
MSS SP-80	(1997) Bronze Gate, Globe, Angle and Check Valves
MSS SP-85	(1994) Cast Iron Globe & Angle Valves, Flanged and Threaded Ends
MSS SP-110	(1996) Ball Valves Threaded, Socket Welding, Solder Joint, Grooved and Flared Ends

NATIONAL ELECTRICAL MANUFACTURERS ASSOCIATION (NEMA)

NEMA 250	(1991) Enclosures for Electrical Equipment (1000 Volts Maximum)
NEMA MG 1	(1993; Rev 1; Rev 2; Rev 3) Motors and Generators

NATIONAL FIRE PROTECTION ASSOCIATION (NFPA)

NFPA 90A	(1996) Installation of Air Conditioning and Ventilating Systems

1.2 SYSTEM DESCRIPTION

This specification section covers the provisions and installation procedures necessary for a complete and totally functional central refrigerated air-conditioning system as defined herein.

1.3 SUBMITTALS

Government approval is required for submittals with a "GA" designation; submittals having an "FIO" designation are for information only. The following shall be submitted in accordance with Section 01300 SUBMITTAL PROCEDURES:

SD-01 Data

Central Refrigerated Air-Conditioning System; FIO.

Manufacturer's catalog data, at least 5 weeks prior to beginning construction, shall be highlighted to show model No., size, options, performance charts and curves, etc. in adequate detail to demonstrate compliance with contract requirements. Data shall include manufacturer's recommended installation instructions and procedures. Data shall be adequate to demonstrate compliance with contract requirements as specified within the paragraphs:

b. System Components
c. Accessories
e. Piping Components

If vibration isolation is specified for a unit, vibration isolator literature shall be included containing catalog cuts and certification that the isolation characteristics of the isolators provided meet the manufacturer's recommendations.

Central Refrigerated Air-Conditioning System; GA.

Manufacturer's catalog data, at least 5 weeks prior to beginning construction, shall be highlighted to show model No., size, options, performance charts and curves, etc. in adequate detail to demonstrate compliance with contract requirements. Data shall include manufacturer's recommended installation instructions and procedures. Data shall be adequate to demonstrate compliance with contract requirements as specified within the paragraphs:

a. Chillers
b. Pumps

If vibration isolation is specified for a unit, vibration isolator literature shall be included containing catalog cuts and certification that the isolation characteristics of the isolators provided meet the manufacturer's recommendations.

Water Treatment Systems; GA.

Six complete copies, at least 5 weeks prior to the purchase of the water treatment system, of the proposed water treatment plan including a layout, control scheme, a list of existing make-up water conditions including the items listed in Paragraph Water Analysis, a list of chemicals, the proportion of chemicals to be added, the final treated water conditions, and a description of environmental concerns for handling the chemicals.

Spare Parts; FIO.

Spare parts data for each different item of material and equipment specified, after approval of the detail drawings and not later than two months prior to the date of beneficial occupancy. The data shall include a complete list of parts and supplies, with source of supply.

Qualifications; FIO.

Six copies of qualified procedures, and list of names and identification symbols of qualified welders and welding operators, prior to non-factory welding operations.

SD-04 Drawings

Central Refrigerated Air-Conditioning System ; GA.

Drawings, at least 5 weeks prior to beginning construction, shall provide adequate detail to demonstrate compliance with contract requirements. Drawings shall consist of:

a. Equipment layouts which identify assembly and installation details.
b. Piping layouts which identify all valves and fittings.

c. Plans and elevations which identify clearances required for maintenance and operation.
d. Wiring diagrams which identify each component individually and all interconnected or interlocked relationships between components.
e. Foundation drawings, bolt-setting information, and foundation bolts prior to concrete foundation construction for all equipment indicated or required to have concrete foundations.
f. Details, if piping and equipment are to be supported other than as indicated, which include loadings and type of frames, brackets, stanchions, or other supports.

SD-06 Instructions

Posted Instructions; FIO.

Posted instructions, at least 2 weeks prior to construction completion, shall include equipment layout, wiring and control diagrams, piping, valves and control sequences, and typed condensed operation instructions. The condensed operation instructions shall include preventative maintenance procedures, methods of checking the system for normal and safe operation, and procedures for safely starting and stopping the system. The posted instructions shall be framed under glass or laminated plastic and be posted where indicated by the Contracting Officer.

SD-07 Schedules

Factory Tests; FIO.

Schedules, at least 2 weeks prior to the factory test, which identify the date, time, and location for each test. Schedules shall be submitted for both the Chiller Performance Test and the Chiller Sound Test.

Tests; FIO.

Test schedules, at least 2 weeks prior to the start of related testing, for each of the field tests, the system performance tests, and the condenser water quality tests. The schedules shall identify the date, time, and location for each test.

Demonstrations; GA.

A schedule, at least 2 weeks prior to the date of the proposed training course, which identifies the date, time, and location for the training.

SD-08 Statements

Verification of Dimensions; FIO.

A letter, at least 2 weeks prior to beginning construction, including the date the site was visited, conformation of existing conditions, and any discrepancies found.

SD-09 Reports

Factory Tests; FIO.

Six copies of the report shall be provided in bound 216 x 279 mm booklets. Reports shall certify the compliance with performance requirements and follow the format of the required testing standard for both the Chiller Performance Tests and the Chiller Sound Tests. Test report shall include certified calibration report of all test instrumentation. Calibration report shall include certification that all test instrumentation has been calibrated within 6 months prior to the test date, identification of all instrumentation, and certification that all instrumentation complies with requirements of the test standard. Test report shall be submitted 1 week after completion of the factory test.

Field Tests; FIO.

Six copies of the report shall be provided in bound 216 x 279 mm booklets. Reports shall document all phases of tests performed during the Water Pipe Testing, the Refrigerant Pipe Testing, and the Cooling Tower Tests. The report shall include initial test summaries, all repairs/adjustments made, and the final test results.

System Performance Tests; FIO.

Six copies of the report shall be provided in bound 216 x 279 booklets. The report shall document compliance with the specified performance criteria upon completion and testing of the system. The report shall indicate the number of days covered by the tests and any conclusions as to the adequacy of the system. The report shall also include the following information and shall be taken at least three different times at outside dry-bulb temperatures that are at least 3 degrees C apart:

a. Date and outside weather conditions.
b. The load on the system based on the following:
   (1) The refrigerant used in the system.
   (2) Condensing temperature and pressure.
   (3) Suction temperature and pressure.
   (5) Running current, voltage and proper phase sequence for each phase of all motors.
   (6) The actual on-site setting of all operating and safety controls.
   (7) Chilled water pressure, flow and temperature in and out of the chiller.

Inspections; FIO.

Six copies of an inspection report, at the completion of one year of service, in bound 216 x 279 inch booklets. The report shall identifying the condition of each condensers. The report shall also include a comparison of the condition of the cooling tower and condenser with the manufacturer's recommended operating conditions. The report shall identify all actions taken by the Contractor and manufacturer to correct deficiencies during the first year of service.

SD-13 Certificates

Central Refrigerated Air-Conditioning System; FIO.

Where the system, components, or equipment are specified to comply with requirements of AGA, NFPA, ARI, ASHRAE, ASME, or UL, 1 copy of proof of such

compliance shall be provided. The label or listing of the specified agency shall be acceptable evidence. In lieu of the label or listing, a written certificate from an approved, nationally recognized testing organization equipped to perform such services, stating that the items have been tested and conform to the requirements and testing methods of the specified agency may be submitted. When performance requirements of this project's drawings and specifications vary from standard ARI rating conditions, computer printouts, catalog, or other application data certified by ARI or a nationally recognized laboratory as described above shall be included. If ARI does not have a current certification program that encompasses such application data, the manufacturer may self certify that his application data complies with project performance requirements in accordance with the specified test standards.

SD-19 Operation and Maintenance Manuals

Operation Manual; FIO.

Six complete copies of an operation manual in bound 216 x 279 booklets listing step-by-step procedures required for system startup, operation, abnormal shutdown, emergency shutdown, and normal shutdown at least 4 weeks prior to the first training course. The booklets shall include the manufacturer's name, model number, and parts list. The manuals shall include the manufacturer's name, model number, service manual, and a brief description of all equipment and their basic operating features.

Maintenance Manual; FIO.

Six complete copies of maintenance manual in bound 216 x 279 booklets listing routine maintenance procedures, possible breakdowns and repairs, and a trouble shooting guide. The manuals shall include piping and equipment layouts and simplified wiring and control diagrams of the system as installed.

Water Treatment System; FIO.

Six complete copies of operating and maintenance manuals for the step-by-step water treatment procedures. The manuals shall include testing procedures used in determining water quality.

1.4 QUALIFICATIONS

Piping shall be welded in accordance with the qualified procedures using performance qualified welders and welding operators. Procedures and welders shall be qualified in accordance with ASME BPV IX. Welding procedures qualified by others, and welders and welding operators qualified by another employer may be accepted as permitted by ASME B31.1. The Contracting Officer shall be notified 24 hours in advance of tests and the tests shall be performed at the work site if practical. The welder or welding operator shall apply his assigned symbol near each weld he makes as a permanent record. Structural members shall be welded in accordance with Section 05055 WELDING, STRUCTURAL.

1.5 SAFETY REQUIREMENTS

Exposed moving parts, parts that produce high operating temperature, parts which may be electrically energized, and parts that may be a hazard to

operating personnel shall be insulated, fully enclosed, guarded, or fitted with other types of safety devices. Safety devices shall be installed so that proper operation of equipment is not impaired.

1.6 DELIVERY, STORAGE, AND HANDLING

All equipment delivered and placed in storage shall be stored with protection from the weather, humidity and temperature variations, dirt and dust, or other contaminants.

1.7 PROJECT/SITE CONDITIONS

1.7.1 Verification of Dimensions

The Contractor shall become familiar with all details of the work, verify all dimensions in the field, and shall advise the Contracting Officer of any discrepancy before performing any work.

1.7.2 Drawings

Because of the small scale of the drawings, it is not possible to indicate all offsets, fittings, and accessories that may be required. The Contractor shall carefully investigate the plumbing, fire protection, electrical, structural and finish conditions that would affect the work to be performed and shall arrange such work accordingly, furnishing required offsets, fittings, and accessories to meet such conditions.

PART 2 PRODUCTS

2.1 STANDARD COMMERCIAL PRODUCTS

Materials and equipment shall be standard products of a manufacturer regularly engaged in the manufacturing of such products, which are of a similar material, design and workmanship. The standard products shall have been in satisfactory commercial or industrial use for two years prior to bid opening. The two-year use shall include applications of equipment and materials under similar circumstances and of similar size. The two years experience shall be satisfactorily completed by a product which has been sold or is offered for sale on the commercial market through advertisements, manufacturer's catalogs, or brochures. Products having less than a two-year field service record shall be acceptable if a certified record of satisfactory field operation, for not less than 6000 hours exclusive of the manufacturer's factory tests, can be shown. All products shall be supported by a service organization. The Contractor shall submit a certified list of qualified permanent service organizations for support of the equipment which includes their addresses and qualifications. These service organizations shall be reasonably convenient to the equipment installation and shall be able to render satisfactory service to the equipment on a regular and emergency basis during the warranty period of the contract.

2.2 NAMEPLATES

Each major component of equipment shall have the manufacturer's name, address, type or style, and catalog or serial number on a plate securely attached to the item of equipment. As a minimum, nameplates shall be provided for:

a. Liquid-Chilling Package(s)
b. Compressor(s)
c. Compressor Driver(s)
d. Condenser(s)
e. Liquid Cooler(s)
f. Receiver(s)
g. Pump(s)
h. Pump Motor(s)
l. Expansion Tanks
m. Air Separator Tanks

2.3 ELECTRICAL WORK

Electrical equipment, motors, motor starters, and wiring shall be in accordance with Section 16415 ELECTRICAL WORK, INTERIOR. Electrical motor driven equipment specified shall be provided complete with motors, motor starters, and controls. Electrical characteristics and enclosure type shall be as shown, and unless otherwise indicated, all motors of 745 W and above with open, dripproof, or totally enclosed fan cooled enclosures, shall be high efficiency type. Field wiring shall be in accordance with manufacturer's instructions. Each motor shall conform to NEMA MG 1 and be of sufficient size to drive the equipment at the specified capacity without exceeding the nameplate rating of the motor. Motors shall be continuous duty with the enclosure specified. Motor starters shall be provided complete with thermal overload protection and other appurtenances necessary for the motor control indicated. Motors shall be furnished with a magnetic across-the-line or reduced voltage type starter as required by the manufacturer. Motor starter shall be provided in enclosures constructed in accordance with UL and NEMA 1 enclosures. Manual or automatic control and protective or signal devices required for the operation specified and any control wiring required for controls and devices specified, but not shown, shall be provided.

2.4 SELF-CONTAINED LIQUID CHILLER

Units shall be assembled, leak-tested, charged (refrigerant and oil), and adjusted at the factory. Chiller shall operate within capacity range and speed recommended by the manufacturer. Parts weighing 23 kg or more which must be removed for inspection, cleaning, or repair, such as motors, gear boxes, cylinder heads, casing tops, condenser, and cooler heads, shall have lifting eyes or lugs. Chiller shall be provided with factory installed insulation on surfaces subject to sweating including the liquid cooler, suction line piping, economizer, and cooling lines. Chiller shall include factory heat tracing of all surfaces subject to freezing. Exposed chilled water piping shall be heat traced. Chiller shall include all customary auxiliaries deemed necessary by the manufacturer for safe, controlled, automatic operation of the equipment. Chiller shall be provided with a single point wiring connection for incoming power supply. Factory installed insulation shall be provided on all suction piping from the evaporator to the compressor and on the liquid cooler shell. Where motors are the gas-cooled type, factory installed insulation shall be provided on the cold-gas inlet connection to the motor per manufacturer's standard practice. Chiller's liquid cooler shall be provided with standard water boxes with flanged mechanical connections.

2.4.1 Scroll, Reciprocating, or Rotary Screw Type

Chiller shall be constructed and rated in accordance with ARI ANSI/ARI 590. Chiller shall be conform to ASHRAE 15. Chiller shall have a minimum full load COP rating of 3.2 in accordance with ARI ANSI/ARI 590. As a minimum, chiller shall include the following components as defined in paragraph CHILLER COMPONENTS.

a. Refrigerant and oil
b. Structural base
c. Controls package
d. Scroll, reciprocating, or rotary screw compressor
e. Compressor driver, electric motor
f. Compressor driver connection
g. Liquid cooler (evaporator)
h. Air- condenser coil
i. Receiver
j. Tools
k. Chiller refrigerant circuit

2.5 CHILLER COMPONENTS

2.5.1 Refrigerant and Oil

Refrigerants shall be one of the fluorocarbon gases. Refrigerants shall have number designations and safety classifications in accordance with ASHRAE 34. Refrigerants shall meet the requirements of ARI 700 as a minimum. Refrigerants shall have an Ozone Depletion Potential (ODP) of less than or equal to 0.05.

2.5.2 Structural Base

Chiller and individual chiller components shall be provided with a factory-mounted welded structural steel base or support legs. Chiller and individual chiller components shall be isolated from the building structure by means of molded neoprene isolation pads. vibration isolators with published load ratings. Vibration isolators shall have isolation characteristics as recommended by the manufacturer for the unit supplied and the service intended.

2.5.3 Chiller Refrigerant Circuit

Chiller refrigerant circuit shall be completely piped and factory leak tested. For multicompressor units, not less than 2 independent refrigerant circuits shall be provided. Circuit shall include as a minimum a combination filter and drier, combination sight glass and moisture indicator, liquid-line solenoid valve for reciprocating or scroll units, an electronic or thermostatic expansion valve with external equalizer, charging ports, compressor service valves, and superheat adjustment.

2.5.4 Controls Package

Chiller shall be provided with a complete factory mounted and prewired electric or microprocessor based control system. Controls package shall be unit-mounted which contains as a minimum a digital display or acceptable gauges, an on-auto-off switch, motor starters, power wiring, control wiring, and disconnect switches. Controls package shall provide operating controls, monitoring capabilities, programmable setpoints, safety controls, and EMCS interfaces as defined below.

2.5.4.1 Operating Controls

Chiller shall be provided with the following adjustable operating controls as a minimum.

a. Leaving chilled water temperature control
b. Adjustable timer to prevent compressor from short cycling
c. Automatic lead/lag controls (adjustable) for multiprocessor units
d. Load limiting
e. Fan sequencing for air-cooled condenser
f. System capacity control to adjust the unit capacity in accordance with the system load and the programmable setpoints. Controls shall automatically re-cycle the chiller on power interruption.
g. Startup and head pressure controls to allow system operation at all ambient temperatures down to -12 degrees C.

2.5.4.2 Monitoring Capabilities

During normal operations, the control system shall be capable of monitoring and displaying the following operating parameters. Access and operation of display shall not require opening or removing any panels or doors.

a. Entering and leaving chilled water temperatures
b. Self diagnostic
c. Operation status
d. Operating hours
e. Number of starts
f. Compressor status (on or off)
g. Refrigerant discharge and suction pressures

2.5.4.3 Programmable Setpoints

The control system shall be capable of being reprogrammed directly at the unit. No parameters shall be capable of being changed without first entering a security access code. The programmable setpoints shall include the following as a minimum.

a. Leaving Chilled Water Temperature
b. Time Clock/Calendar Date

2.5.4.4 Safety Controls with Manual Reset

Chiller shall be provided with the following safety controls which automatically shutdown the chiller and which require manual reset.

a. Low chilled water temperature protection
b. High condenser refrigerant discharge pressure protection
c. Low suction pressure protection
d. Chilled water flow detection
e. Motor current overload and phase loss protection
f. High motor winding temperature protection for hermetic motors
g. Low oil flow protection

2.5.4.5 Safety Controls with Automatic Reset

Chiller shall be provided with the following safety controls which automatically shutdown the chiller and which provide automatic reset.

a. Over/under voltage protection
b. Phase reversal protection
c. Chilled water flow interlock

2.5.4.6 Remote Alarm

During the initiation of a safety shutdown, the control system shall be capable of activating a remote alarm bell. In coordination with the chiller, the contractor shall provide an alarm circuit (including transformer if applicable) and a minimum 100 mm diameter alarm bell. Alarm circuit shall activate bell in the event of machine shutdown due to the chiller's monitoring of safety controls. The alarm bell shall not sound for a chiller that uses low-pressure cutout as an operating control.

2.5.4.7 Energy Management Control System (EMCS) Interface

None required.

2.5.5 Compressor(s)

2.5.5.1 Reciprocating Compressor(s)

All rotating parts shall be statically and dynamically balanced at the factory to minimize vibration. Compressors shall be capable of operating at partial-load conditions without increased vibration over the normal vibration at full load operation and shall be capable of continuous operation down to the lowest step of unloading as specified. Compressors of size 7.45 kW and above shall have an oil lubrication system of the reversible, forced-feed type with oil strainer. Shaft seal in open-type units shall be mechanical type. Piston speed for open-type compressors shall not exceed the manufacturer's recommendation or 6 m/s, whichever is less. Compressors shall include:

a. Vertical, V, W, or radial cylinder design
b. Oil lubrication
c. Integrally cast block of close-grained iron or cast aluminum block with hardened steel cylinder sleeves
d. Oil-level bull's eye
e. Cast cylinder heads
f. Cast-aluminum or forged-steel connecting rods
g. Cast iron or forged-steel crankshaft
h. Main bearings of the sleeve-insert type
i. Crankcase oil heaters controlled as recommended by the manufacturer
j. Suction and discharge refrigerant service valves that are flange connected, wrench operated, with cap
k. A strainer on the suction side of the compressor
l. A hot-gas muffler to reduce vibration and noise from pulsations

2.5.5.2 Scroll Compressor(s)

Compressors shall be of the compliant, hermetically sealed design. Compressors shall be mounted on vibration isolators to minimize vibration

and noise. Rotating parts shall be statically and dynamically balanced at the factory to minimize vibration. Lubrication system shall be centrifugal pump type equipped with a means for determining oil level and an oil charging valve. Crankcase oil heater shall be provided if standard or if available as an option. If provided, the crankcase oil heater shall be controlled as recommended by the manufacturer.

2.5.5.3 Rotary Screw Compressor(s)

Compressors shall operate stably for indefinite time periods at any stage of capacity reduction without hot-gas bypass. Provision shall be made to insure proper lubrication of bearings and shaft seals on shutdown with or without electric power supply. Rotary screw compressors shall include:

a. An open or hermetic, positive displacement, oil-injected design directly driven by the compressor driver. Compressor shall allow access to internal compressor components for repairs, inspection, and replacement of parts.
b. Rotors which are solid steel forging with sufficient rigidity for proper operation.
c. A maximum rotor operating speed no greater than 3600 RPM.
d. Casings of cast iron, precision machined for minimal clearance about periphery of rotors.
e. A lubrication system of the forced-feed type that provides oil at the proper pressure to all parts requiring lubrication.
f. Shaft main bearings of the sleeve type with heavy duty bushings or rolling element type in accordance with ABEMA Std 9 or ABEMA Std 11. Bearings shall be conservatively loaded and rated for an L(10) life of not less than 200,000 hours.
g. A differential oil pressure or flow cutout to allow the compressor to operate only when the required oil pressure or flow is provided to the bearings.
h. A temperature- or pressure-initiated, hydraulically actuated, single-slide-valve, capacity-control system to provide minimum automatic capacity modulation from 100 percent to 25 percent.
i. An oil separator and oil return system to remove oil entrained in the refrigerant gas and automatically return the oil to the compressor.
j. Crankcase oil heaters controlled as recommended by the manufacturer.

2.5.6 Compressor Driver Connections

Each compressor shall be driven by a V-belt drive or direct connected through a flexible coupling, except that flexible coupling is not required on hermetic units. V-belt drives shall be designed for not less than 150 percent of the driving motor capacity. Flexible couplings shall be of the type that does not require lubrication.

2.5.7 Liquid Cooler (Evaporator)

Cooler shall be of the shell-and-coil or shell-and-tube type design. Condenser's refrigerant side shall be designed and factory pressure tested to comply with ASHRAE 15. Cooler shell shall be constructed of seamless or welded steel. Coil bundles shall be totally removable and arranged to drain completely. Tubes shall be seamless copper, plain, integrally finned with smooth bore or integrally finned with enhanced bore. Each tube shall be

individually replaceable. Tubes shall be installed into carbon mild steel tube sheets by rolling. Tube baffles shall be properly spaced to provide adequate tube support and cross flow. Performance shall be based on a water velocity not less than 0.91 m/s nor more than 3.7 mm and a fouling factor of 0.0005.

2.5.8 Air-Cooled Condenser Coil

Condenser coil shall be of the extended-surface fin-and-tube type and shall be constructed of seamless copper or aluminum tubes with compatible copper or aluminum fins. Fins shall be soldered or mechanically bonded to the tubes and installed in a metal casing. Coils shall be circuited and sized for a minimum of 3 degrees C subcooling and full pumpdown capacity. Coil shall be factory leak and pressure tested after assembly in accordance with ASHRAE 15.

2.5.9 Receivers

Liquid receivers not already specified herein as an integral factory-mounted part of a package, shall be designed, fitted, and rated in accordance with the recommendations of ARI 495, except as modified herein. Receiver shall bear a stamp certifying compliance with ASME BPV VIII Div 1 and shall meet the requirements of ASHRAE 15. Inner surfaces shall be thoroughly cleaned by sandblasting or other approved means. Each receiver shall have a storage capacity not less than 20 percent in excess of that required for the fully-charged system. Each receiver shall be equipped with inlet, outlet drop pipe, drain plug, purging valve, relief valves of capacity and setting required by ASHRAE 15, and two bull's eye liquid-level sight glasses. Sight glasses shall be in the same vertical plane, 90 degrees apart, perpendicular to the axis of the receiver, and not over 75 mm horizontally from the drop pipe measured along the axis of the receiver. In lieu of bull's eye sight glass, external gauge glass with metal glass guard and automatic closing stop valves may be provided.

2.5.10 Tools

One complete set of special tools as recommended by the manufacturer for field maintenance of the system shall be provided. Tools shall be mounted on a tool board in the equipment room or contained in a toolbox as directed by the Contracting Officer.

2.6 ACCESSORIES

2.6.1 Pumps

Pumps shall be the electrically driven, non-overloading, centrifugal type which conform to HI 1.1-1.5. Pump capacity, efficiency, motor size, and impeller type shall be as indicated on the drawings. Pumps shall be selected at or near peak efficiency. Pump curve shall rise continuously from maximum capacity to shutoff. Pump motor shall be totally enclosed and have sufficient wattage for the service required. Each pump motor shall be equipped with an across-the-line magnetic controller in a NEMA 250, Type 1 enclosure with "START-STOP" switch in the cover.

2.6.1.1 Construction

Shaft seal shall be mechanical-seal type. Impeller shall be statically and dynamically balanced. Each pump casing shall be designed to withstand the discharge head specified plus the static head on system plus 50 percent of the total, but not less than 862 kPa. Pump casing and bearing housing shall be close grained cast iron. High points in the casing shall be provided with manual air vents; low points shall be provided with drain plugs. Impeller, impeller wearing rings, glands, casing wear rings, and shaft sleeve shall be bronze. Shaft shall be carbon or alloy steel, turned and ground. Bearings shall be ball-bearings, roller-bearings, or oil-lubricated bronze-sleeve type bearings, and be efficiently sealed or isolated to prevent loss of oil or entrance of dirt or water. Pump and motor shall be mounted on a common cast iron base having lipped edges and tapped drainage openings or structural steel base with lipped edges or drain pan and tapped drainage openings. Pump shall be provided with shaft coupling guard. Close coupled pumps shall be provided with drip pockets and tapped openings. Pump motor shall have the required capacity to prevent overloading with pump operating at any point on its characteristic curve. Pump speed shall not exceed 3,600 rpm, except where the pump head is less than 180 kPa, the pump speed shall not exceed 1,750 rpm. Pump shall be accessible for servicing without disturbing piping connections.

2.6.1.2 Mechanical Shaft Seals

Seals shall be single, inside mounted, end-face-elastomer bellows type with stainless steel spring, brass or stainless steel seal head, carbon rotating face, and tungsten carbide or ceramic sealing face. Glands shall be bronze and of the water-flush design to provide lubrication flush across the face of the seal. Bypass line from pump discharge to flush connection in gland shall be provided, with filter or cyclone separator in line.

2.6.1.3 Stuffing-Box Type Seals

Stuffing box shall include minimum 4 rows of square, impregnated TFE (Teflon) or graphite cord packing and a bronze split-lantern ring. Packing gland shall be bronze interlocking split type.

2.6.2 Expansion Tanks

Expansion tanks shall be welded steel, constructed, tested and stamped in accordance with ASME BPV VIII Div 1 for a working pressure of 862 kPa and precharged to the minimum operating pressure. Expansion tanks shall have a replaceable diaphragm and be the captive air type. Tanks shall accommodate expanded water of the system generated within the normal operating temperature range, limiting this pressure increase at all components in the system to the maximum allowable pressure at those components. Each tank air chamber shall be fitted with an air charging valve. Tanks shall be supported by steel legs or bases for vertical installation or steel saddles for horizontal installations. The only air in the system shall be the permanent sealed-in air cushion contained within the expansion tank.

2.6.3 Field Installed Insulation

Field installed insulation shall be as specified in Section 15250 THERMAL INSULATION FOR MECHANICAL SYSTEMS, except for header and waterbox insulation which shall be flexible cellular insulation in accordance with ASTM C 534, Type I.

2.6.4 Gaskets

Gaskets shall conform to ASTM F 104 - classification for compressed sheet with nitrile binder and acrylic fibers for maximum 371 degrees C service.

2.6.5 Bolts and Nuts

Bolts and nuts, except as required for piping applications, shall be in accordance with ASTM A 307. The bolt head shall be marked to identify the manufacturer and the standard with which the bolt complies in accordance with ASTM A 307.

2.7 WATER TREATMENT SYSTEMS

When water treatment is specified, the use of chemical-treatment products containing hexavalent chromium (Cr) is prohibited.

2.7.1 Chilled Water

Water to be used in the chilled water systems shall be treated to maintain the conditions recommended by this specification as well as the recommendations from the manufacturers of the condenser and evaporator coils. Chemicals shall meet all required federal, state, and local environmental regulations for the treatment of evaporator coils and direct discharge to the sanitary sewer.

2.7.2 Water Treatment Services

The services of a company regularly engaged in the treatment of chilled water systems shall be used to determine the correct chemicals required, the concentrations required, and the water treatment equipment sizes and flow rates required. The company shall maintain the chemical treatment and provide all chemicals required for the chilled water systems for a period of 1 year from the date of occupancy. The chemical treatment and services provided over the 1 year period shall meet the requirements of this specification as well as the recommendations from the manufacturers of the condenser and evaporator coils. Acid treatment and proprietary chemicals shall not be used.

2.7.3 Chilled Water System

A shot feeder shall be provided on the chilled water piping as indicated. Size and capacity of feeder shall be based on local requirements and water analysis. The feeder shall be furnished with an air vent, gauge glass, funnel, valves, fittings, and piping.

2.8 PIPING COMPONENTS

2.8.1 Water Piping and Fittings

2.8.1.1 Steel Pipe

Steel pipe shall conform to ASTM A 53, Schedule 40, Type E or S, Grades A or B. Type F pipe shall not be used.

2.8.1.2 Steel Pipe Joints and Fittings

Joints and fittings shall be welded, flanged, or threaded as indicated. If not otherwise indicated, piping 25 mm and smaller shall be threaded; piping larger than 25 mm and smaller than 80 mm shall be either threaded or welded; and piping 80 mm and larger shall be welded or flanged. The manufacturer of each fitting shall be permanently identified on the body of the fitting in accordance with MSS SP-25.

a. Welded Joints and Fittings: Welded fittings shall conform to ASTM A 234/A234M, and identified with the appropriate grade and marking symbol. Butt-welding fittings shall conform to ASME B16.9. Socket-welding and threaded fittings shall conform to ASME B16.11.

b. Flanged Joints and Fittings: Flanges shall conform to ASTM A 181/A181M and ASME B16.5 Class 150. Gaskets shall be nonasbestos compressed material in accordance with ASME B16.21, 1.59 mm (1/16 inch) thickness, full face or self-centering flat ring type. This gaskets shall contain aramid fibers bonded with styrene butadeine rubber (SBR) or nitrile butadeine rubber (NBR). Bolts, nuts, and bolt patterns shall conform to ASME B16.5. Bolts shall be high or intermediate strength material conforming to ASTM A 193/A193M.

c. Threaded Joints and Fittings: Threads shall conform to ASME B1.20.1. Pipe nipples shall conform to ASTM A 733, type and material to match adjacent piping. Unions shall conform to ASME B16.39, type as required to match adjacent piping.

d. Dielectric Unions and Flanges: Dielectric unions shall have the tensile strength and dimensional requirements specified. Unions shall have metal connections on both ends threaded to match adjacent piping. Metal parts of dielectric unions shall be separated with a nylon insulator to prevent current flow between dissimilar metals. Unions shall be suitable for the required operating pressures and temperatures. Dielectric flanges shall provide the same pressure ratings as standard flanges and provide complete electrical isolation.

2.8.1.3 Copper Tube

Copper tubing for water service shall conform to ASTM B 88, Type K or L.

2.8.1.4 Copper Tube Joints and Fittings

Wrought copper and bronze solder-joint pressure fittings shall conform to ASME B16.22 and ASTM B 75. Cast copper alloy solder-joint pressure fittings shall conform to ASME B16.18. Cast copper alloy fittings for flared copper tube shall conform to ASME B16.26 and ASTM B 62. Brass or bronze adapters for brazed tubing may be used for connecting tubing to flanges and to threaded ends of valves and equipment. Extracted brazed tee joints produced with an acceptable tool and installed as recommended by the manufacturer may be used.

2.8.2 Water Piping Valves and Accessories

Valves shall be rated for Class 125 and shall be suitable for operating temperature of 120 degrees C. Valves shall be suitable for the working

pressure of the pipe in which installed. Valves shall meet the material, fabrication and operating requirements of ASME B31.1. Chain operators shall be provided for valves located 3 m or higher above the floor.

2.8.2.1 Gate Valves

Gate valves 65 mm and smaller shall conform to MSS SP-80 and shall be bronze with rising stem and threaded, soldered, or flanged ends. Gate valves 80 mm and larger shall conform to MSS SP-70, Type I, II, Class 125, Design OF and shall be cast iron with bronze trim, outside screw and yoke, and flanged or threaded ends.

2.8.2.2 Globe and Angle Valves

Globe and angle valves 65 mm and smaller shall conform to MSS SP-80 and shall be bronze with threaded, soldered, or flanged ends. Globe and angle valves 80 mm and larger shall conform to MSS SP-85 and shall be cast iron with bronze trim and flanged or threaded ends.

2.8.2.3 Check Valves

Check valves 65 mm and smaller shall conform to MSS SP-80 and shall be bronze with threaded, soldered, or flanged ends. Check valves 80 mm and larger shall conform to MSS SP-71, Type I, II, III, or IV, Class 125 or 150 and shall be cast iron with bronze trim and flanged or threaded ends.

2.8.2.4 Butterfly Valves

Butterfly valves shall be in accordance with MSS SP-67, Type 1 and shall be 2 flange or lug wafer type, and shall be bubble tight at 1,000 kPa. Valve bodies shall be cast iron, malleable iron, or steel. Valves smaller than 200 mm shall have throttling handles with a minimum of seven locking positions. Valves 200 mm and larger shall have totally enclosed manual gear operators with adjustable balance return stops and position indicators. Valves in insulated lines shall have extended neck to accommodate insulation thickness.

2.8.2.5 Plug Valves

Plug valves 50 mm and larger shall conform to MSS SP-78, have flanged or threaded ends, and have cast iron bodies with bronze trim. Valves 50 mm and smaller shall be bronze with NPT connections for black steel pipe and brazed connections for copper tubing. Valves shall be lubricated, non-lubricated, or tetrafluoroethylene resin-coated type. Valves shall be resilient, double seated, trunnion mounted with tapered lift plug capable of 2-way shutoff. Valves shall operate from fully open to fully closed by rotation of the handwheel to lift and turn the plug. Valves shall a weatherproof operators with mechanical position indicators. Valves 200 mm or larger shall be provided with manual gear operators with position indicators.

2.8.2.6 Ball Valves

Ball valves 15 mm and larger shall conform to MSS SP-72 or MSS SP-110 and shall be ductile iron or bronze with threaded, soldered, or flanged ends. Valves 200 mm or larger shall be provided with manual gear operators with position indicators.

2.8.2.7 Calibrated Balancing Valves

Each valve shall be calibrated so that flow can be determined when the temperature and pressure differential across valve is known. Valves shall have an integral pointer which registers the degree of valve opening. Each valve shall be constructed with internal seals to prevent leakage and shall be supplied with preformed insulation. Valves Cv rating shall be as indicated. Valve bodies shall be provided with tapped openings and pipe extensions with positive shutoff valves outside of pipe insulation. The pipe extensions shall be provided with quick connecting hose fittings for a portable meter to measure the pressure differential. One portable differential meter, suitable for the operating pressure specified, shall be provided. The meter shall be complete with hoses, vent, integral metering connections, and carrying case as recommended by the valve manufacturer. In lieu of the balancing valve with integral metering connections, a ball valve or plug valve with a separately installed orifice plate or venturi tube may be used for balancing.

2.8.2.8 Automatic Flow Control Valves

Valves shall automatically maintain a constant flow as indicated. Valves shall modulate by sensing the pressure differential across the valve body. Valves shall be selected for the flow required and provided with a permanent nameplate or tag carrying a permanent record of the factory-determined flow rate and flow control pressure levels. Valves shall control the flow within 5 percent of the tag rating. Valve materials shall be the same as specified for the ball or plug valves. Valve Cv rating shall be as indicated. Valve operators shall be the electric or pneumatic type as indicated. Valves shall be capable of positive shutoff against the system pump head, valve bodies shall be provided with tapped openings and pipe extensions with shutoff valves outside of pipe insulation. The pipe extensions shall be provided with quick connecting hose fittings and differential meter, suitable for the operating pressure specified. The meter shall be complete with hoses, vent, integral metering connections, and carrying case as recommended by the valve manufacturer.

2.8.2.9 Air Vents

Manual air vents shall be brass or bronze valves or cocks suitable for 862 kpa service, and furnished with threaded plugs or caps. Automatic air vents shall be float type, cast iron, stainless steel, or forged steel construction, suitable for 862 kpa service.

2.8.2.10 Strainers

Strainers shall be in accordance with ASTM F 1199, except as modified herein. Strainer shall be the cleanable, basket or "Y" type, the same size as the pipeline. The strainer bodies shall be fabricated of cast iron with bottoms drilled, and tapped. The bodies shall have arrows clearly cast on the sides indicating the direction of flow. Each strainer shall be equipped with removable cover and sediment screen. The screen shall be made of minimum 0.8 mm monel, with small perforations numbering not less than 60 per square centimeter to provide a net free area through the basket of at least 3.30 times that of the entering pipe. The flow shall be into the screen and out through the perforations.

2.8.2.11 Combination Strainer and Suction Diffuser

At the Contractors option in lieu of the pump strainer shown on the drawings, a combination strainer and suction diffuser, consisting of an angle type body with removable strainer basket and straightening vanes, a suction pipe support, and a blowdown outlet, may be provided on pump suction. The combination strainer and suction diffuser shall be in accordance with ASTM F 1199, except as modified herein.

2.8.2.12 Pump Discharge Valves

Pump discharge valves shall be installed where indicated and shall perform the functions of a nonslam check valve, a manual balancing valve, and a shutoff. Valves shall be of cast iron or ductile iron construction with bronze and/or stainless steel accessories. Valves shall have an integral pointer which registers the degree of valve opening. Flow through the valve shall be manually adjustable from bubble tight shutoff to full flow. Valves smaller than 50 mm shall have NPT connections. Valves 50 mm and larger shall have flanged connections. The valve design shall allow the back seat for the stem to be replaced in the field under full line pressure.

2.8.2.13 Backflow Preventers

Backflow preventers shall be in accordance with Section 15400 PLUMBING, GENERAL PURPOSE.

2.8.2.14 Flexible Pipe Connectors

Flexible pipe connectors shall be designed for 862 kpa or 1034 kPa service as appropriate for the static head plus the system head, and 120 degrees C, for grooved end flexible connectors. The flexible section shall be constructed of rubber, tetrafluoroethylene resin, or corrosion-resisting steel, bronze, monel, or galvanized steel. The flexible section shall be suitable for intended service with end connections to match adjacent piping. Flanged assemblies shall be equipped with limit bolts to restrict maximum travel to the manufacturer's standard limits. Unless otherwise indicated, the length of the flexible connectors shall be as recommended by the manufacturer for the service intended. Internal sleeves or liners, compatible with circulating medium, shall be provided when recommended by the manufacturer. Covers to protect the bellows shall be provided where indicated.

2.8.2.15 Pressure Gauges

Gauges shall conform to ASME B40.1 and shall be provided with throttling type needle valve or a pulsation dampener and shut-off valve. Gauge shall be a minimum of 85 mm in diameter with a range from 0 kPa to approximately 1.5 times the maximum system working pressure.

2.8.2.16 Thermometers

Thermometers shall have brass, malleable iron, or aluminum alloy case and frame, clear protective face, permanently stabilized glass tube with indicating-fluid column, white face, black numbers, and a 225 mm scale. Thermometers shall have rigid stems with straight, angular, or inclined pattern.

2.8.2.17 Pipe Nipples

Pipe nipples shall be in accordance with ASTM A 733 and be of material to match adjacent piping.

2.8.2.18 Pipe Unions

Pipe unions shall be in accordance with ASME B16.39 and be of material to match adjacent piping.

2.8.2.19 Solder

Solder for water piping shall be in accordance with ASTM B 32, alloy grade 50B.

2.8.3 Expansion Joints

2.8.3.1 Slip-Tube Joints

Expansion joints shall provide for either single or double slip of the connected pipes, as required or indicated, and for not less than the traverse indicated. The joints shall be designed for working temperature and pressure suitable for the application, but not less than 1034 kPa, and shall be in accordance with applicable requirements of EJMA-01 and ASME B31.1. End connections shall be flanged or beveled for welding as indicated. Joints shall be provided with an anchor base where required or indicated. Where adjoining pipe is carbon steel, the sliding slip shall be seamless steel plated with a minimum of 0.12 mm of hard chrome in accordance with ASTM B 650. All joint components shall be suitable for the intended service. Initial settings shall be made in accordance with the manufacturer's recommendations to compensate for ambient temperature at time of installation. Pipe alignment guides shall be installed as recommended by the joint manufacturer. Pipe alignment guides shall in no case be more than 1.5 m from expansion joints except for pipe 100 mm or smaller. Pipe alignment guides on pipe 100 mm or smaller shall be installed not more than 600 mm from expansion joints. Service outlets shall be provided where indicated.

2.8.3.2 Flexible Ball Joints

Flexible ball joints shall be constructed of alloys as appropriate for the service intended. Where so indicated, the ball joint shall be designed for packing injection under full line pressure to contain leakage. The joint ends shall be threaded to 50 mm only, grooved, flanged, or beveled for welding as indicated or required and shall be capable of absorbing a minimum of 15 degree angular flex and 360 degree rotation. Ball and sockets shall be suitable for the intended service. The exterior spherical surface of carbon steel balls shall be plated with minimum 0.12 mmof hard chrome in accordance with EJMA-01 and ASME B31.1 where applicable. Where required, flanges shall conform to ASME B16.5.

2.8.3.3 Bellows Type Joints

Bellows type joints shall be flexible, guided expansion joints. The expansion element shall be stabilized corrosion resistant steel. Bellows type expansion joints shall conform to the applicable requirements of EJMA-01 and ASME B31.1 with internal sleeves. Guiding of piping on both sides of

expansion joint shall be in accordance with the published recommendations of the manufacturer of the expansion joint. The joints shall be designed for the working temperature and pressure suitable for the application but not less than 1034 kPa.

2.9 FABRICATION

2.9.1 Factory Coating

Unless otherwise specified, equipment and component items, when fabricated from ferrous metal, shall be factory finished with the manufacturer's standard finish, except that items located outside of buildings shall have weather resistant finishes that will withstand 500 hours exposure to the salt spray test specified in ASTM B 117 using a 5 percent sodium chloride solution. Immediately after completion of the test, the specimen shall show no signs of blistering, wrinkling, cracking, or loss of adhesion and no sign of rust creepage beyond 3 mm on either side of the scratch mark. Cut edges of galvanized surfaces where hot-dip galvanized sheet steel is used shall be coated with a zinc-rich coating conforming to ASTM D 520, Type I.

2.9.2 Field Painting

Painting required for surfaces not otherwise specified, and finish painting of items only primed at the factory are specified in Section 09900 PAINTING, GENERAL.

2.10 FACTORY TESTS

2.10.1 Chiller Performance Test

The Contractor and proposed chiller manufacturer shall be responsible for performing the chiller factory test to validate the specified full load capacity, full load EER, and IPLV in accordance with ARI ANSI/ARI ~~550~~590 except as indicated. The chiller factory test shall be performed in the presence of a Government representative. The Contractor and chiller manufacturer shall provide to the Government a certified chiller factory test report in accordance with ARI ANSI/ARI ~~550~~590 to confirm that the chiller performs as specified. All tests shall be conducted in an ARI certified test facility in conformance with ARI ANSI/ARI ~~550~~590 procedures and tolerances, except as indicated. Tolerance or deviation shall not be allowed on chiller capacity or EER. ~~Stable operation at minimum load of 10 percent of total capacity shall be demonstrated during the factory test.~~Chillers with rotary screw compressor(s) shall demonstrate stable operation at minimum load of 10 percent of total capacity. Chillers with reciprocating compressor(s) or scroll compressor(s) shall demonstrate stable operation at minimum load of 20 percent of total capacity.

a. Temperature adjustments shall adhere to ARI ANSI/ARI ~~550~~590 to adjust from the design fouling factor to the clean tube condition. Test temperature adjustments shall be verified prior to testing by the manufacturer. There shall be no exceptions to conducting the test with clean tubes with the temperature adjustments per section A7.3 of ARI ANSI/ARI ~~550~~590. The manufacturer shall clean the tubes, if necessary, prior to testing to obtain a test fouling factor of 0.0000.

b. The factory test instrumentation shall be per ARI ANSI/ARI ~~550~~590 and the calibration shall be traceable to the National Institute of Standards and Technology.

c. A certified test report of all data shall be forwarded to the Government for approval prior to project acceptance. All calibration curves and information sheets for all instrumentation shall be provided.

d. If the equipment fails to perform within allowable tolerances, the manufacturer shall be allowed to make necessary revisions to his equipment and retest as required.

2.11 SUPPLEMENTAL COMPONENTS/SERVICES

2.11.1 Drain and Makeup Water Piping

Piping shall comply with the requirements of Section 15400 PLUMBING, GENERAL PURPOSE. Drains which connect to sanitary sewer system shall be connected by means of an indirect waste.

PART 3 EXECUTION

3.1 INSTALLATION

All work shall be performed in accordance with the manufacturer's published diagrams, recommendations, and equipment warranty requirements. Where equipment is specified to conform to the requirements of ASME BPV VIII Div 1 and ASME BPV IX, the design, fabrication, and installation of the system shall conform to ASME BPV VIII Div 1 and ASME BPV IX.

3.1.1 Refrigeration System

3.1.1.1 Equipment

Necessary supports shall be provided for all equipment, appurtenances, and pipe as required, including frames or supports for compressors, pumps, cooling towers, condensers, liquid coolers, and similar items. Compressors shall be isolated from the building structure. If mechanical vibration isolators are not provided, vibration absorbing foundations shall be provided. Each foundation shall include isolation units consisting of machine and floor or foundation fastenings, together with intermediate isolation material. Other floor-mounted equipment shall be set on not less than a 150 mm concrete pad doweled in place. Concrete foundations for floor mounted pumps shall have a mass equivalent to three times the weight of the components, pump, base plate, and motor to be supported. In lieu of concrete pad foundation, concrete pedestal block with isolators placed between the pedestal block and the floor may be provided. Concrete pedestal block shall be of mass not less than three times the combined pump, motor, and base weights. Isolators shall be selected and sized based on load-bearing requirements and the lowest frequency of vibration to be isolated. Isolators shall limit vibration to .09 percent at lowest equipment rpm. Lines connected to pumps mounted on pedestal blocks shall be provided with flexible connectors. Foundation drawings, bolt-setting information, and foundation bolts shall be furnished prior to concrete foundation construction for all equipment indicated or required to have concrete foundations. Concrete for foundations and concrete-structured or cased-

cooling towers shall be as specified in Section 03300 CAST-IN-PLACE STRUCTURAL CONCRETE. Equipment shall be properly leveled, aligned, and secured in place in accordance with manufacturer's instructions.

3.1.1.2 Automatic Controls

Automatic controls for the central refrigeration system specified in paragraph REFRIGERATION SYSTEM shall be provided with the central refrigeration equipment. These controls shall operate automatically to balance the equipment capacity with the load on the air conditioning system, and shall be fully coordinated with and integrated into the temperature control system specified in Section 15895 AIR SUPPLY, DISTRIBUTION, VENTILATION, AND EXHAUST SYSTEM and 15950 HEATING, VENTILATING AND AIR CONDITIONING (HVAC) CONTROL SYSTEMS.

3.1.2 General Piping Installation

3.1.2.1 Brazed Joints

Before brazing copper joints, both the outside of the tube and the inside of the fitting shall be cleaned with a wire fitting brush until the entire joint surface is bright and clean. Brazing flux shall not be used. Surplus brazing material shall be removed at all joints. Steel tubing joints shall be made in accordance with the manufacturer's recommendations. Joints in steel tubing shall be painted with the same material as the baked-on coating within 8 hours after joints are made. Tubing shall be protected against oxidation during brazing by continuous purging of the inside of the piping using nitrogen. All piping shall be supported prior to brazing and shall not be sprung or forced.

3.1.2.2 Threaded Joints

Threaded joints shall be made with tapered threads and made tight with PTFE tape complying with ASTM D 3308 or equivalent thread-joint compound applied to the male threads only. Not more than three threads shall show after the joint is made.

3.1.2.3 Welded Joints

Welding shall be in accordance with qualified procedures using qualified welders and welding operators. Procedures and welders shall be qualified in accordance with ASME BPV IX. Welding procedures qualified by others, and welders and welding operators qualified by another employer may be accepted as permitted by ASME B31.1. Contracting Officer shall be notified 24 hours in advance of welding tests and the tests shall be performed at the work site if practical. A permanent mark shall be applied near each weld to identify the welder who made that weld. Structural members shall be welded in accordance with Section 05055 WELDING, STRUCTURAL. Welded joints in steel refrigerant piping shall be fusion-welded. Changes in direction of piping shall be made with welded fittings only; mitering or notching pipe or other similar construction to form elbows or tees will not be permitted. Branch connections shall be made with welding tees or forged welding branch outlets. Steel pipe shall be thoroughly cleaned of all scale and foreign matter before the piping is assembled. During welding the pipe and fittings shall be filled with an inert gas, such as nitrogen, to prevent the formation of scale. Beveling, alignment, heat treatment, and inspection of weld shall conform to ASME B31.1. Weld defects shall be removed and

rewelded at no additional cost to the Government. Electrodes shall be stored and dried in accordance with AWS D1.1 or as recommended by the manufacturer. Electrodes that have been wetted or that have lost any of their coating shall not be used.

3.1.2.4 Flanged Joints

Flanged joints shall be faced true, provided with gaskets suitable for use with refrigerants and made square and tight. When steel refrigerant piping is used, union or flange joints shall be provided in each line immediately preceding the connection to each piece of equipment requiring maintenance, such as compressors, coils, chillers, control valves, and other similar items.

3.1.2.5 Flared Connections

When flared connections are used, a suitable lubricant shall be used between the back of the flare and the nut in order to avoid tearing the flare while tightening the nut.

3.1.2.6 Supports

a. General: All refrigerant pipe supports shall be in accordance with ASME B31.5. Hangers used to support piping 50 mm (2 inches) and larger shall be fabricated to permit adequate adjustment after erection while still supporting the load. Pipe guides and anchors shall be installed to keep pipes in accurate alignment, to direct the expansion movement, and to prevent buckling, swaying, and undue strain. Piping subjected to vertical movement, when operating temperatures exceed ambient temperatures, shall be supported by variable spring hangers and supports or by constant support hangers.

b. Seismic Requirements: All piping and attached valves shall be supported and braced to resist seismic loads as specified under Section 13083 SEISMIC PROTECTION FOR MECHANICAL, ELECTRICAL EQUIPMENT as shown on the drawings. Structural steel required for reinforcement to properly support piping, headers, and equipment but not shown shall be provided under this section. Material used for support shall be as specified under Section 05120 STRUCTURAL STEEL.

c. Structural Attachments: Structural steel brackets required to support piping, headers, and equipment, but not shown, shall be provided under this section. Material and installation shall be as specified under Section 05120 STRUCTURAL STEEL.

3.1.2.7 Pipe Hangers, Inserts, and Supports

Pipe hangers, inserts, and supports shall conform to MSS SP-58 and MSS SP-69, except as modified herein. Pipe hanger types 5, 12, and 26 shall not be used.

a. Hangers: Type 3 shall not be used on insulated piping.

b. Inserts: Type 18 inserts shall be secured to concrete forms before concrete is placed. Continuous inserts which allow more

adjustments may be used if they otherwise meet the requirements for Type 18 inserts.

c. C-Clamps: Type 19 and 23 C-clamps shall be torqued per MSS SP-69 and have both locknuts and retaining devices, furnished by the manufacturer. Field-fabricated C-clamp bodies or retaining devices are not acceptable.

d. Angle Attachments: Type 20 attachments used on angles and channels shall be furnished with an added malleable-iron heel plate or adapter.

e. Hangers: Type 24 may be used only on trapeze hanger systems or on fabricated frames.

f. Saddles and Shields: Where Type 39 saddle or Type 40 shield are permitted for a particular pipe attachment application, the Type 39 saddle, connected to the pipe, shall be used on all pipe 100 mm and larger when the temperature of the medium is 16 degrees C or higher. Type 40 shields shall be used on all piping less than 100 mm and all piping 100 mm and larger carrying medium less than 16 degrees C. A high density insulation insert of cellular glass shall be used under the Type 40 shield for piping 50 mm and larger.

g. Horizontal Pipe Supports: Horizontal pipe supports shall be spaced as specified in MSS SP-69 and a support shall be installed not over 300 mm from the pipe fitting joint at each change in direction of the piping. Pipe supports shall be spaced not over 1.5 m apart at valves. Pipe hanger loads suspended from steel joist with hanger loads between panel points in excess of 22 kg shall have the excess hanger loads suspended from panel points.

h. Vertical Pipe Supports: Vertical pipe shall be supported at each floor, except at slab-on-grade, and at intervals of not more than 4.5 m, not more than 2.4 m from end of risers, and at vent terminations.

i. Pipe Guides: Type 35 guides using, steel, reinforced polytetrafluoroethylene (PTFE) or graphite slides shall be provided where required to allow longitudinal pipe movement. Lateral restraints shall be provided as required. Slide materials shall be suitable for the system operating temperatures, atmospheric conditions, and bearing loads encountered.

j. Steel Slides: Where steel slides do not require provisions for restraint of lateral movement, an alternate guide method may be used. On piping 100 mm and larger, a Type 39 saddle shall be used. On piping under 100 mm, a Type 40 protection shield may be attached to the pipe or insulation and freely rest on a steel slide plate.

k. High Temperature Guides with Cradles: Where there are high system temperatures and welding to piping is not desirable, then the Type 35 guide shall include a pipe cradle, welded to the guide structure and strapped securely to the pipe. The pipe shall be separated from the slide material by at least 100 mm, or by an amount adequate for the insulation, whichever is greater.

l. Multiple Pipe Runs: In the support of multiple pipe runs on a common base member, a clip or clamp shall be used where each pipe crosses the base support member. Spacing of the base support members shall not exceed the hanger and support spacing required for an individual pipe in the multiple pipe run.

3.1.2.8 Pipe Alignment Guides

Pipe alignment guides shall be provided where indicated for expansion loops, offsets, and bends and as recommended by the manufacturer for expansion joints, not to exceed 1.5 m on each side of each expansion joint, and in lines 100 mm or smaller not more than 600 mm on each side of the joint.

3.1.2.9 Anchors

Anchors shall be provided wherever necessary or indicated to localize expansion or to prevent undue strain on piping. Anchors shall consist of heavy steel collars with lugs and bolts for clamping and attaching anchor braces, unless otherwise indicated. Anchor braces shall be installed in the most effective manner to secure the desired results using turnbuckles where required. Supports, anchors, or stays shall not be attached where they will injure the structure or adjacent construction during installation or by the weight of expansion of the pipeline. Detailed drawings of pipe anchors shall be submitted for approval before installation.

3.1.2.10 Pipe Sleeves

Sleeves shall not be installed in structural members except where indicated or approved. Rectangular and square openings shall be as detailed. Each sleeve shall extend through its respective wall, floor, or roof, and shall be cut flush with each surface. Pipes passing through concrete or masonry wall or concrete floors or roofs shall be provided with pipe sleeves fitted into place at the time of construction. Unless otherwise indicated, sleeves shall be of such size as to provide a minimum of 6 mm all-around clearance between bare pipe and sleeves or between jacketed-insulation and sleeves. Sleeves in bearing walls, waterproofing membrane floors, and wet areas shall be steel pipe or cast iron pipe. Sleeves in non-bearing walls, floors, or ceilings may be steel pipe, cast iron pipe, galvanized sheet metal with lock-type longitudinal seam and of the metal thickness indicated, or moisture resistant fiber or plastic. Except in pipe chases or interior walls, the annular space between pipe and sleeve or between jacket over-insulation and sleeve shall be sealed as indicated and specified in Section 07900 JOINT SEALING. Pipes passing through wall waterproofing membrane shall be sleeved as specified above, and a waterproofing clamping flange shall be installed.

a. Roof and Floor Penetrations: Pipes passing through roof or floor waterproofing membrane shall be installed through a 5.17 kg/sq. m. copper sleeve, or a 0.81 mm thick aluminum sleeve, each within an integral skirt or flange. Flashing sleeve shall be suitably formed, and skirt or flange shall extend not less than 200 mm from the pipe and shall be set over the roof or floor membrane in a troweled coating of bituminous cement. The flashing sleeve shall extend up the pipe a minimum of 50 mm above highest floor level of the roof or a minimum of 250 mm above the roof, whichever is greater, or 250 mm above the floor. The annular space between the flashing sleeve and the bare pipe or between the flashing sleeve

and the metal-jacket-covered insulation shall be sealed as indicated. Pipes up to and including 250 mm in diameter passing through roof or floor waterproofing membrane may be installed through a cast iron sleeve with caulking recess, anchor lugs, flashing clamp device, and pressure ring with brass bolts. Waterproofing membrane shall be clamped into place and sealant shall be placed in the caulking recess. In lieu of a waterproofing clamping flange and caulking and sealing of annular space between pipe and sleeve or conduit and sleeve, a modular mechanical type sealing assembly may be installed. Seals shall consist of interlocking synthetic rubber links shaped to continuously fill the annular space between the pipe/conduit and sleeve with corrosion protected carbon steel bolts, nuts, and pressure plates. Links shall be loosely assembled with bolts to form a continuous rubber belt around the pipe with a pressure plate under each bolt head and each nut. After the seal assembly is properly positioned in the sleeve, tightening of the bolt shall cause the rubber sealing elements to expand and provide a watertight seal between the pipe/conduit seal between the pipe/conduit and the sleeve. Each seal assembly shall be sized as recommended by the manufacturer to fit the pipe/conduit and sleeve involved. The Contractor electing to use the modular mechanical type seals shall provide sleeves of the proper diameters.

b. Fire-Rated Walls and Partitions: Penetration of fire-rated walls and partitions shall be sealed as specified in Section 07270 FIRESTOPPING.

3.1.2.11 Escutcheons

Finished surfaces where exposed piping, bare or insulated, pass through floors, walls, or ceilings, except in boiler, utility, or equipment rooms, shall be provided with escutcheons. Where sleeves project slightly from floors, special deep-type escutcheons shall be used. Escutcheon shall be secured to pipe or pipe covering.

3.1.2.12 Access Panels

Access panels shall be provided for all concealed valves, vents, controls, and items requiring inspection or maintenance. Access panels shall be of sufficient size and located so that the concealed items may be serviced and maintained or completely removed and replaced. Access panels shall be as specified in Section 05500 MISCELLANEOUS METALS.

3.1.3 Water Piping

Pipe and fitting installation shall conform to the requirements of ASME B31.1. Pipe shall be cut accurately to measurements established at the jobsite, and worked into place without springing or forcing, completely clearing all windows, doors, and other openings. Cutting or other weakening of the building structure to facilitate piping installation will not be permitted without written approval. Pipe or tubing shall be cut square, shall have burrs removed by reaming, and shall permit free expansion and contraction without causing damage to the building structure, pipe, joints, or hangers.

3.1.3.1 Directional Changes

Changes in direction shall be made with fittings, except that bending of pipe 100 mm and smaller will be permitted, provided a pipe bender is used and wide weep bends are formed. The centerline radius of bends shall not be less than 6 diameters of the pipe. Bent pipe showing kinks, wrinkles, flattening, or other malformations will not be accepted.

3.1.3.2 Functional Requirements

Horizontal supply mains shall pitch down in the direction of flow as indicated. The grade shall not be less than 2 mm in 1 m. Reducing fittings shall be used for changes in pipe sizes. Open ends of pipelines and equipment shall be capped or plugged during installation to keep dirt or other foreign materials out of the system. Pipe not otherwise specified shall be uncoated. Connections to appliances shall be made with malleable iron unions for steel pipe 65 mm or less in diameter, and with flanges for pipe 80 mm and above in diameter. Connections between ferrous and copper piping shall be electrically isolated from each other with dielectric unions or flanges. All piping located in air plenums shall conform to NFPA 90A requirements. Pipe and fittings installed in inaccessible conduits or trenches under concrete floor slabs shall be welded.

3.1.3.3 Valves

Isolation gate or ball valves shall be installed on each side of each piece of equipment, at the midpoint of all looped mains, and at any other points indicated or required for draining, isolating, or sectionalizing purpose. Isolation valves may be omitted where balancing cocks are installed to provide both balancing and isolation functions. Each valve except check valves shall be identified. Valves in horizontal lines shall be installed with stems horizontal or above.

3.1.3.4 Air Vents

Air vents shall be provided at all high points, on all water coils, and where indicated to ensure adequate venting of the piping system.

3.1.3.5 Drains

Drains shall be provided at all low points and where indicated to ensure complete drainage of the piping. Drains shall be accessible, and shall consist of nipples and caps or plugged tees unless otherwise indicated.

3.1.3.6 Flexible Pipe Connectors

Preinsulated flexible pipe connectors shall be attached to other components in strict accordance with the latest printed instructions of the manufacturer to ensure a vapor tight joint. Hangers, when required to suspend the connectors, shall be of the type recommended by the flexible pipe connector manufacturer and shall be provided at the intervals recommended.

3.1.3.7 Flanges and Unions

Except where copper tubing is used, union or flanged joints shall be provided in each line immediately preceding the connection to each piece of

equipment or material requiring maintenance such as coils, pumps, control valves, and other similar items.

3.1.4 Field Applied Insulation

Field applied insulation other than that specified for water boxes and headers shall be as specified in Section 15250 THERMAL INSULATION FOR MECHANICAL SYSTEMS.

3.1.5 Factory Applied Insulation

3.1.5.1 Refrigerant Suction Lines

Refrigerant suction lines between the cooler and each compressor and cold gas inlet connections to gas cooled motors shall be insulated with not less than 19 mm thick unicellular plastic foam.

3.1.5.2 Liquid Coolers

Liquid coolers (including chilled water headers or boxes), which may have factory or field applied insulation, shall be insulated with unicellular plastic foam. Insulation shall be not less than 19 mm thick or have a maximum thermal conductivity of 1.59 W/((sq. m)(degree K)). In lieu of the above insulation, a 50 mm thickness of urethane foam may be used. Urethane foam shall be completely covered and sealed with a sheet metal jacket not lighter than 1.0 mm. Insulation on heads of coolers shall be constructed to provide easy removal and replacement of heads without damage to the insulation.

3.2 TESTS

3.2.1 Field Tests

Tests shall be conducted in the presence of the Contracting Officer. Water and electricity required for the tests will be furnished by the Government. Any material, equipment, instruments, and personnel required for the test shall be provided by the Contractor. The services of a qualified technician shall be provided as required to perform all tests and procedures indicated herein. Field tests shall be coordinated with Section 15990 TESTING, ADJUSTING, AND BALANCING OF HVAC SYSTEMS.

3.2.1.1 Water Pipe Testing

After cleaning, water piping shall be hydrostatically tested at a pressure equal to 150 percent of the total system operating pressure for period of time sufficient to inspect every joint in the system and in no case less than 2 hours. Leaks shall be repaired and piping retested until test is successful. No loss of pressure shall be allowed. Leaks shall be repaired by rewelding or replacing pipe or fittings. Caulking of joints will not be permitted. Concealed and insulated piping shall be tested in place before concealing.

3.2.2 System Performance Tests

After the foregoing tests have been completed and before each refrigeration system is accepted, tests to demonstrate the general operating characteristics of all equipment shall be conducted by a registered

professional engineer or an approved manufacturer's startup representative experienced in system startup and testing, at such times as directed. Tests shall cover a period of not less than 1 day for each system and shall demonstrate that the entire system is functioning in accordance with the drawings and specifications. Corrections and adjustments shall be made as necessary and tests shall be re-conducted to demonstrate that the entire system is functioning as specified.

3.3 MANUFACTURER'S FIELD SERVICE

The services of a factory-trained representative shall be provided for 1 day. The representative shall advise on the following:

a. Hermetic machines:

(1) Testing hermetic water-chilling unit under pressure for refrigerant leaks; evacuation and dehydration of machine to an absolute pressure of not over 300 microns.

(2) Charging the machine with refrigerant.

(3) Starting the machine.

3.4 CLEANING AND ADJUSTING

3.4.1 Piping

Pipes shall be cleaned free of scale and thoroughly flushed of all foreign matter. A temporary bypass shall be provided for all water coils to prevent flushing water from passing through coils. Strainers and valves shall be thoroughly cleaned. Prior to testing and balancing, air shall be removed from all water systems by operating the air vents. Temporary measures, such as piping the overflow from vents to a collecting vessel shall be taken to avoid water damage during the venting process. Air vents shall be plugged or capped after the system has been vented.

3.4.2 Equipment

Equipment shall be wiped clean, with all traces of oil, dust, dirt, or paint spots removed. Temporary filters shall be provided for all fans that are operated during construction, and new filters shall be installed after all construction dirt has been removed from the building. System shall be maintained in this clean condition until final acceptance. Bearings shall be properly lubricated with oil or grease as recommended by the manufacturer. Belts shall be tightened to proper tension. Control valves and other miscellaneous equipment requiring adjustment shall be adjusted to setting indicated or directed. Fans shall be adjusted to the speed indicated by the manufacturer to meet specified conditions.

3.5 DEMONSTRATIONS

Contractor shall conduct a training course for the operating staff as designated by the Contracting Officer. The training period shall consist of a total 8 hours of normal working time and start after the system is functionally completed but prior to final acceptance tests. The field instructions shall cover all of the items contained in the Operation and Maintenance Manuals as well as demonstrations of routine maintenance operations.

End of Section

SECTION 15651

PREFABRICATED UNDERGROUND COOLING DISTRIBUTION PIPING SYSTEM
05/91

PART 1 GENERAL

1.1 REFERENCES

The publications listed below form a part of this specification to the extent referenced. The publications are referred to in the text by basic designation only.

AMERICAN SOCIETY FOR TESTING AND MATERIALS (ASTM)

ASTM A 53	(1995b) Pipe, Steel, Black and Hot-Dipped, Zinc-Coated Welded and Seamless
ASTM A 105	(1996) Forgings, Carbon Steel, for Piping Components
ASTM A 106	(1994) Seamless Carbon Steel Pipe for High-Temperature Service
ASTM A 234	(1996b) Piping Fittings of Wrought Carbon Steel and Alloy Steel for Moderate and Elevated Temperatures
ASTM B 88	(1996) Seamless Copper Water Tube
ASTM C 518	(1991) Steady-State Heat Flux Measurements and Thermal Transmission Properties by Means of the Heat Flow Meter Apparatus
ASTM C 591	(1994) Unfaced Preformed Rigid Cellular Polyisocyanurate Thermal Insulation
ASTM D 1248	(1984; R 1989) Polyethylene Plastics Molding and Extrusion Materials
ASTM D 1784	(1992) Rigid Poly(Vinyl Chloride) (PVC) Compounds and Chlorinated Poly(Vinyl Chloride) (CPVC) Compounds

AMERICAN SOCIETY OF MECHANICAL ENGINEERS (ASME)

ASME B1.20.1	(1983; R 1992) Pipe Threads, General Purpose (Inch)
ASME B16.9	(1993) Factory-Made Wrought Steel Buttwelding Fittings
ASME B16.11	(1991) Forged Fittings, Socket-Welding and Threaded

ASME B31.1	(1995) Power Piping
ASME BPV IX	(1995; Addenda Dec 1995) Boiler and Pressure Vessel Code; Section IX, Welding and Brazing Qualifications

COPPER DEVELOPMENT ASSOCIATION (CDA)

CDA-02	(1995) Copper Tube Handbook

MANUFACTURERS STANDARDIZATION SOCIETY OF THE VALVE AND FITTINGS INDUSTRY (MSS)

MSS SP-73	(1991) Brazing Joints for Copper and Copper Alloy Pressure Fittings

1.2 SYSTEM DESCRIPTION

The system consists of a buried prefabricated chilled water piping system connecting the outdoor air cooled chillers to a point 150 mm inside of the building. The contract drawings show the specific arrangement of piping, sizes.

1.3 SUBMITTALS

Government approval is required for submittals with a "GA" designation; submittals having an "FIO" designation are for information only. The following shall be submitted in accordance with Section 01300 SUBMITTAL PROCEDURES:

SD-01 Data

Distribution System; GA.

Data composed of catalog cuts, brochures, circulars, specifications and product data, and printed information in sufficient detail and scope to verify compliance with the requirements of the contract documents.

SD-04 Drawings

Distribution System; FIO.

Detail drawings consisting of fabrication and assembly drawings, for all parts of the work in sufficient detail to check conformity with the requirements of the contract documents, prior to installation. Detail drawings shall also contain complete piping, wiring and schematic diagrams and any other details to demonstrate that the system has been coordinated and will properly function as a unit. Drawings shall show proposed layout, method of compensation for pipe expansion and contraction, anchorage of equipment and appurtenances, and equipment relationship to other parts of the work including clearances required for maintenance and operation. The drawings shall clearly identify any proposed deviations from the requirements of the contract documents.

SD-13 Certificates

Distribution System; FIO.

The manufacturer's or system fabricator's written certification stating that the distribution system furnished meets all the requirements of this specification.

Welding Procedures and Operators; FIO.

Prior to welding operations, a copy of qualified procedures and a list of names and identification symbols of qualified welders and welding operators.

SD-19 Operation and Maintenance Manuals

Distribution System; GA.

Six copies of operation and six copies of maintenance manuals for the equipment furnished, one complete set prior to performance testing and the remainder upon acceptance. Operation manuals shall detail the step-by-step procedures required for equipment startup, operation, and shutdown. Operation manuals shall include the manufacturer's name, model number, parts list, and brief description of all equipment and their basic operating features. Maintenance manuals shall list routine maintenance procedures, possible breakdowns and repairs, and troubleshooting guides. Maintenance manuals shall include piping and equipment layout and simplified wiring and control diagrams of the equipment system as installed. Manuals shall be approved prior to the field performance testing.

1.4 DELIVERY AND STORAGE

After delivery to the jobsite, all materials and equipment shall be protected from anything which could cause damage to the material or equipment. All pipe shall be sealed at each end to keep the interior clean and free of dirt and debris. Fittings shall be kept together and their interior surfaces shall remain clean. Any insulation shall be kept dry and clean.

1.5 FIELD MEASUREMENTS

The Contractor shall become familiar with all details of the work, verify all dimensions in the field and shall advise the Contracting Officer of any discrepancy before performing the work.

1.6 WELDING

Piping shall be welded in accordance with qualified procedures using performance qualified welders and welding operators. Procedures and welders shall be qualified in accordance with ASME BPV IX. Welding procedures qualified by others, and welders and welding operators qualified by another employer may be accepted as permitted by ASME B31.1. The Contracting Officer shall be notified 24 hours in advance of tests and the tests shall be performed at the work site if practicable. The welder or welding operator shall apply his assigned symbol near each weld he makes as a permanent record. Structural members shall be welded in accordance with Section 05055 WELDING, STRUCTURAL.

PART 2 PRODUCTS

2.1 STANDARD PRODUCTS

System components shall be standard products of a manufacturer regularly engaged in the manufacture of the product and shall essentially duplicate items that have been in satisfactory use for at least 2 years prior to bid opening. The system shall be supported by a service organization that is, in the opinion of the Contracting Officer, reasonably convenient to the site.

2.2 PIPING AND CASING MATERIALS

2.2.1 General

Metallic pressure pipe, fittings, and piping accessories shall conform to the requirements of ASME B31.1 and shall be types suitable for the temperature and pressure of the water.

2.2.2 Piping

2.2.2.1 Steel Pipe

Piping shall conform to ASTM A 53, Grade B, standard weight, black or to ASTM A 106, Grade B, standard weight.

2.2.2.2 Copper Tubing

Copper tubing shall conform to ASTM B 88, Type K or L.

2.2.3 Casings

2.2.3.1 Polyvinyl Chloride (PVC) Casing

PVC casings shall conform to ASTM D 1784, Class 12454-B with a minimum thickness equal to the greater of one-hundredth the diameter of the casing or 1.50 mm.

2.2.3.2 Polyethylene (PE) Casing

Polyethylene casings shall conform to ASTM D 1248, Type III, Class C, Category 3 or 4, Grade P 34 with thickness as follows:

Casing Diameter (in mm)	Minimum Thickness (in mm)
250 and smaller	3
250 to 450	4
450 to 600	5
over 600	6

2.2.3.3 Reinforced Thermosetting Resin Pipe (RTRP) Casing

RTRP casing shall be of the same material as designated for the pipe with casing thickness as follows:

Casing Diameter (in mm)	Minimum Thickness (in mm)
200 and smaller	1.2
250	2
300	2.7
350	2.9
400 to 450	3
500	3.2
600	3.9

2.3 PIPING CONNECTIONS

2.3.1 Steel Pipe

Steel pipe smaller than 20 mm (3/4 inch) may be threaded, otherwise, all steel pipe shall be welded. Steel welding fittings shall conform to the requirements of ASTM A 105 or ASTM A 234. Welding fittings shall also conform to ASME B16.9 for buttweld fittings and ASME B16.11 for socket-weld fittings. Long radius buttwelding elbows conforming to ASME B16.9 shall be used whenever space permits. Pipe Threads shall conform to ASME B1.20.1. Pipe to be threaded shall be schedule 80.

2.3.2 Copper Pipe

Copper pipe shall be brazed or connected using an insulated pipe coupling. Wrought copper or cast copper alloy solder joint pressure fittings shall conform to MSS SP-73. Insulated pipe couplings for copper pipe shall be cast bronze containing an O-ring seal on each end and shall be jacketed and sealed to act as an expansion joint.

2.4 END SEALS

2.4.1 General

Each preinsulated section of piping shall have a complete sealing of the insulation to provide a permanent water and vapor seal at each end of the preinsulated section of piping. Preinsulated sections of piping modified in the field shall be provided with an end seal which is equivalent to the end seals furnished with the preinsulated section of piping. End seals must be tested and certified in accordance with paragraph Casing and End Seal Testing and Certification.

2.4.2 Types

End seals provided shall be one of the following types:

a. Carrying the outer casing over tapered pipe insulation ends and extending it to the carrier pipe. Sufficient surface bonding area shall be provided between the casing and the carrier pipe.

b. Using specially designed molded caps made of polyethylene or rubber of standard manufactured thickness. A minimum 40 mm surface bonding area shall be provided between the cap and both the casing and carrier pipe.

c. Using elastomer-ring end seals designed and dimensioned to fit in the annular space between the casing and the carrier pipe.

d. Using a waterproof mastic seal vapor barrier over the exposed insulation ends.

e. Shrink sleeves.

2.4.3 Casing and End Seal Testing and Certification

Testing and certification procedures by an independent testing laboratory shall demonstrate that casings and end seals are capable of resisting penetration of water into the casing and insulation. The test shall be performed on the type of prefabricated system to be furnished. If more than one type of prefabricated system is to be used, then the tests shall be performed on each type. The test shall consist of hot and cold cycle testing followed by immersion in a water filled chamber with a head pressure. The hot and cold cycle testing shall consist of 14 days of temperature cycling. A fluid with a temperature of 5 degrees C shall circulate through the carrier pipe alternating every 24-hours with a fluid with a temperature of 95 degrees C circulating through the carrier pipe for a low temperature hot water or dual temperature service or 24 degrees for a chilled water service. While the hot and cold cycle test is being performed, the test sample is either buried or encased in dry bedding sand with a minimum of 300 mm of sand all around the test sample. The carrier pipe size of the test sample shall be 80 mm in diameter and shall be restrained during the test period. The insulation thickness shall not exceed the maximum thickness provided for the piping in the project. Transition time for temperature cycle testing shall not exceed 15 minutes in going from cold to hot and 30 minutes in going from hot to cold. The fluid in the carrier pipe may be water, oil or heat transfer fluid. Following the hot and cold cycling test, the test sample shall be immersed in a water filled chamber. The pressure on the highest point of the test sample shall not be less than 60 kPa subjected over the entire length of the 2.4 m test sample of prefabricated pipe. The water shall contain a dye penetrant, which will be used to check for end seal leakage. The pressure in the chamber must be held for not less than 48 hours. Upon completion of this pressure test, the test sample shall be cut open. With the use of a light that will readily show the presence of the dye that was in the water, the test sample shall be inspected. Evidence of the dye inside the test sample shall indicate that the end seal is not acceptable and cannot be certified. A pipe manufacturer who has a current Federal Letter of Acceptability for a system furnished under this section will be exempt from the testing specified in this paragraph.

2.5 INSULATION

2.5.1 Factory Applied Insulation

Prefabricated pipe and fittings shall be insulated in the factory. Foam insulation for prefabricated insulated pipe and fittings shall be polyurethane foam meeting the requirements of ASTM C 591 having a density not less than 32 kg per cubic meter. The polyurethane foam shall completely fill the annular space between the carrier pipe and the casing. Insulation thickness shall be a minimum of 25 mm. The insulation thermal conductivity factor shall not exceed the numerical value of 0.02 W/mK at 24 degrees C,

when tested in accordance with ASTM C 518. Manufacturer shall certify that the insulated pipe is free of insulation voids.

2.5.2 Field Applied Insulation

Field applied insulation for fittings, and field casing closures, if required, and other piping system accessories shall be polyurethane matching the pipe insulation. Thickness shall match adjacent piping insulation thickness. Buried fittings and accessories shall have field applied polyurethane insulation to match adjacent piping and shall be protected with a covering matching the pipe casing. Shrink sleeves with a minimum thickness of 1.3 mm shall be provided over casing connection joints.

PART 3 EXECUTION

3.1 INSTALLATION

For all preinsulated, prefabricated systems, the Contractor shall obtain the services of a trained representative of the pipe system manufacturer to instruct the Contractor's work forces in the installation procedures to ensure that the system is installed in accordance with the manufacturer's PUBLISHED instructions and the plans and specifications. The manufacturer's representative shall be a person who regularly performs such duties for the manufacturer. The Contractor shall furnish the Contracting Officer a list of names of personnel trained and certified by the pipe system manufacturer in the installation of this system. Only personnel whose names appear on the list will be allowed to install the system. The list shall not be more than 1 year old.

3.2 PIPING SYSTEMS

3.2.1 Buried Insulated Systems

Buried insulated systems shall consist of carrier pipe, insulation, casing, end seals, fittings and accessories as specified.

3.3 INSTALLATION OF PIPING SYSTEMS

The piping system furnished shall be installed in accordance with the piping system manufacturer's instructions. Piping shall be installed without springing or forcing other than what has been calculated for cold spring. Pipe ends shall have burrs removed by reaming and shall be installed to permit free expansion and contraction without damage to joints or hangers. Nonmetallic pipe cut in the field shall be machined to fit couplings or joints and shall be coated or treated to match standard factory coated ends. Copper tubing shall not be installed in the same trench with ferrous piping materials. When nonferrous metallic pipe (e.g., copper tubing) crosses any ferrous piping material, a minimum vertical separation of 300 mm shall be maintained between pipes. Connections between different types of pipe and accessories shall be made with transition fittings approved by the manufacturer of the piping system.

3.3.1 Pitching of Horizontal Piping

Horizontal piping shall be pitched at a grade of not less than 40 mm in 1 m toward the drain points unless otherwise indicated.

3.3.2 Open Ends

Open ends of pipelines and equipment shall be properly capped or plugged during installation to keep dirt and other foreign matter out of the system.

3.3.3 Cutting Prefabricated Piping Sections

Where prefabricated pipe sections are field cut, new end seals similar to the factory applied end seal shall be provided and installed in accordance with the manufacturer's instructions.

3.3.4 Joints

3.3.4.1 Welded Joints

Welded joints between sections of pipe and between pipe and fittings shall be provided where specified or indicated.

3.3.4.2 Threaded Joints

Threaded joints shall not be used belowground. Joints shall be made tight with polytetrafluoroethylene tape applied to the male threads only. Not more than three threads shall show after the joint is made up.

3.3.4.3 Brazed Joints

Brazed joints for copper pipe and fittings shall conform to CDA-02. Brazing alloys melting above 593.3 degrees C (1100 degrees F) shall be utilized.

3.3.5 Field Casing Closures

Field insulation and encasement of joints shall be accomplished after the visual and pressure tests specified are completed. Field insulation and encasement shall be in accordance with the manufacturer's written instructions. Thickness dimensions of the insulation and casing materials shall not be less than those of the adjoining prefabricated section. Insulating material shall be foamed in place polyurethane. Care should be taken to ensure that field closures are made under conditions of temperature and cleanliness required to produce a sound, continuous vapor barrier. A standard polyethylene heat shrink sleeve shall be installed over the casing and shall have a 150 mm minimum overlap at each end.

3.3.6 Underground Warning Tape

Underground warning tape shall be buried above the piping during the trench backfilling and shall be buried approximately 300 mm deep. Tape shall be 0.1 mm thick polyethylene tape. Tape shall be 150 mm wide and be printed with repetitive caution warnings along its length. Tapes shall be yellow in color with black letters. Tape color and lettering shall not be affected by moisture or other substances contained in the backfill material.

3.4 EARTHWORK

Earthwork shall be performed in accordance with Section 02222EXCAVATION, TRENCHING, AND BACKFILLING FOR UTILITIES SYSTEMS.

3.5 ELECTRICAL WORK

Electrical work shall be performed in accordance with either Section 16375 ELECTRICAL DISTRIBUTION SYSTEM, UNDERGROUND or Section 16370ELECTRICAL DISTRIBUTION SYSTEM, AERIAL.

3.6 TESTING

Tests shall be conducted before, during, and after installation of the system. All instruments, equipment, facilities, and labor required to properly conduct the tests shall be provided by the Contractor. Test pressure gauges for a specific test shall have dials indicating not less than 1-1/2 times nor more than 2 times the test pressure. It shall be the Contractor's responsibility to make the pipe system workable at his expense.

3.6.1 Carrier Pipe Cleaning and Testing

Distribution piping shall be tested as required before backfilling and with all joints exposed. The area between joints may be backfilled as necessary to prevent pipe movement.

3.6.1.1 Cleaning Carrier Pipe

Prior to testing, the interior of the carrier pipe shall be cleaned of all foreign materials by thorough flushing with clean water. Water shall be circulated at a velocity between 2 and 3 m/s for a minimum of 4 hours. If required, temporary and/or supplementary pumps shall be provided to ensure that required velocity is achieved. Any system strainers shall be cleaned after the flushing operation is complete. Temporary strainers shall be installed as required. After flushing, the water will remain in the piping system for testing of the system. All air must be removed from the system prior to starting the tests.

3.6.1.2 Hydrostatic Pressure Cycling and Tests

Hydrostatic pressure cycling will have four cycles. Each cycle shall consist of a 10 minute period at 1000 kPa followed by a 5 minute period at a pressure less than 350 kPa. The next cycle will begin immediately following the completion of the previous cycle. Pressure rise and drop shall not exceed 690 kPa per minute. The pressure gauge shall be located and the pressure measured at the opposite end of the system from where the pressure is applied. After completion of the hydrostatic pressure cycling the first hydrostatic pressure test shall be performed. During the first hydrostatic pressure test the system shall be proven tight at a pressure of 1-1/2 times the working pressure up to 1000 kPa. This pressure shall be held for a minimum of 1 hour. The method of pressurizing the system shall be disconnected from the system before starting the 1 hour pressure holding period. If the pressure cannot be held for the specified length of time, the cause of pressure loss shall be determined, corrected and the hydrostatic pressure cycling and first hydrostatic pressure test shall be repeated until the system can hold the required pressure for at least 1 hour. After successful completion of the first hydrostatic pressure test, the water shall be drained out of the piping system and the piping system filled with treated water as defined in paragraph TREATED WATER for the

remaining tests and for permanent operation of the system. The hydrostatic pressure cycling and tests shall be repeated after the system has been filled with treated water, using the same test conditions and criteria.

End of Section

SECTION 15895

AIR SUPPLY, DISTRIBUTION, VENTILATION, AND EXHAUST SYSTEM
02/94

PART 1 GENERAL

1.1 REFERENCES

The publications listed below form a part of this specification to the extent referenced. The publications are referred to in the text by basic designation only.

AIR CONDITIONING AND REFRIGERATION INSTITUTE (ARI)

ARI 350	(1986) Sound Rating of Non-Ducted Indoor Air-Conditioning Equipment
ARI 410	(1991) Forced-Circulation Air-Cooling and Air-Heating Coils
ARI 430	(1989) Central-Station Air-Handling Units
ARI 440	(1993) Room Fan-Coil and Unit Ventilator
ARI 880	(1990) Air Terminals
ARI Guideline D	(1987) Application and Installation of Central Station Air-Handling Units

AIR MOVEMENT AND CONTROL ASSOCIATION (AMCA)

AMCA 210	(1985) Laboratory Methods of Testing Fans for Rating
AMCA 300	(1996) Reverberant Room Method for Sound Testing of Fans

AMERICAN BEARING MANUFACTURERS ASSOCIATION (ABEMA)

ABEMA 9	(1990) Load Ratings and Fatigue Life for Ball Bearings
ABEMA 11	(1990) Load Ratings and Fatigue Life for Roller Bearings

AMERICAN SOCIETY FOR TESTING AND MATERIALS (ASTM)

ASTM A 53	(1993a) Pipe, Steel, Black and Hot-Dipped, Zinc-Coated Welded and Seamless
ASTM A 167	(1993) Stainless and Heat-Resisting Chromium-Nickel Steel Plate, Sheet, and Strip
ASTM A 181	(1995b) Forgings, Carbon Steel, for General-Purpose Piping

ASTM A 193	(1996) Alloy-Steel and Stainless Steel Bolting Materials for High-Temperature Service
ASTM A 234	(1996) Piping Fittings of Wrought Carbon Steel and Alloy Steel for Moderate and Elevated Temperatures
ASTM A 733	(1993) Welded and Seamless Carbon Steel and Austenitic Stainless Steel Pipe Nipples
ASTM B 62	(1993) Composition Bronze or Ounce Metal Castings
ASTM B 75	(1993) Seamless Copper Tube
ASTM B 88	(1993a) Seamless Copper Water Tube
ASTM B 650	(1995) Electrodeposited Engineering Chromium Coatings of Ferrous Substrates
ASTM C 916	(1985; R 1990) Adhesives for Duct Thermal Insulation
ASTM C 1071	(1991) Thermal and Acoustical Insulation (Glass Fiber, Duct Lining Material)
ASTM E 84	(1994) Surface Burning Characteristics of Building Materials
ASTM E 437	(1992) Industrial Wire Cloth and Screens (Square Opening Series)
ASTM F 1199	(1988; R 1993) Cast (All Temperature and Pressures) and Welded Pipe Line Strainers (150 psig and 150 degrees F Maximum)
ASTM F 1200	(1988; R 1993) Fabricated (Welded) Pipe Line Strainers (Above 150 psig and 150 degrees F)

AMERICAN SOCIETY OF HEATING, REFRIGERATING AND AIR-CONDITIONING ENGINEERS (ASHRAE)

ASHRAE 52.1	(1992) Gravimetric and Dust-Spot Procedures for Testing Air-Cleaning Devices Used in General Ventilation for Removing Particulate Matter
ASHRAE 68	(1986) Laboratory Method of Testing In-Duct Sound Power Measurement Procedures for Fans
ASHRAE 70	(1991) Method of Testing Rating the Performance of Air Outlets and Inlets

AMERICAN SOCIETY OF MECHANICAL ENGINEERS (ASME)

ASME B1.20.1	(1983; R 1992) Pipe Threads, General Purpose (Inch)
ASME B16.3	(1992) Malleable Iron Threaded Fittings
ASME B16.5	(1988; Errata Oct 88; B16.5a) Pipe Flanges and Flanged Fittings
ASME B16.9	(1993) Factory-Made Wrought Steel Buttwelding Fittings
ASME B16.11	(1991) Forged Fittings, Socket-Welding and Threaded
ASME B16.18	(1984; R 1994) Cast Copper Alloy Solder Joint Pressure Fittings
ASME B16.21	(1992) Nonmetallic Flat Gaskets for Pipe Flanges
ASME B16.22	(1989) Wrought Copper and Copper Alloy Solder Joint Pressure Fittings
ASME B16.26	(1988) Cast Copper Alloy Fittings for Flared Copper Tubes
ASME B16.39	(1986; R 1994) Malleable Iron Threaded Pipe Unions Classes 150, 250, and 300
ASME B31.1	(1995) Power Piping
ASME B40.1	(1991) Gauges - Pressure Indicating Dial Type - Elastic Element
ASME BPV IX	(1995; Addenda Dec 1995) Boiler and Pressure Vessel Code; Section IX, Welding and Brazing Qualifications

AMERICAN WELDING SOCIETY (AWS)

AWS D1.1	(1994) Structural Welding Code - Steel

COMMERCIAL ITEM DESCRIPTIONS (CID)

CID A-A-1419	(Rev D) Filter Element, Air Conditioning (Viscous-Impingement and Dry Types, Replaceable)

EXPANSION JOINT MANUFACTURERS ASSOCIATION (EJMA)

EJMA-01	(1993) EJMA Standards

MANUFACTURERS STANDARDIZATION SOCIETY OF THE VALVE AND FITTINGS INDUSTRY (MSS)

MSS SP-25	(1993) Standard Marking System for Valves, Fittings, Flanges and Unions
MSS SP-58	(1993) Pipe Hangers and Supports - Materials, Design and Manufacture
MSS SP-69	(1991) Pipe Hangers and Supports - Selection and Application
MSS SP-70	(1990) Cast Iron Gate Valves, Flanged and Threaded Ends
MSS SP-71	(1990) Cast Iron Swing Check Valves, Flanged and Threaded Ends
MSS SP-72	(1992) Ball Valves with Flanged or Butt-Welding Ends for General Service
MSS SP-80	(1987) Bronze Gate, Globe, Angle and Check Valves
MSS SP-85	(1994) Cast Iron Globe & Angle Valves, Flanged and Threaded Ends
MSS SP-110	(1991) Ball Valves Threaded, Socket-Welding, Solder Joint, Grooved and Flared Ends

NATIONAL ELECTRICAL MANUFACTURERS ASSOCIATION (NEMA)

NEMA MG 1	(1993; Rev 1; Rev 2) Motors and Generators

NATIONAL FIRE PROTECTION ASSOCIATION (NFPA)

NFPA 90A	(1993) Installation of Air Conditioning and Ventilating Systems

SHEET METAL AND AIR CONDITIONING CONTRACTORS' NATIONAL ASSOCIATION (SMACNA)

SMACNA-05	(1992) Fire, Smoke and Radiation Damper Installation Guide for HVAC Systems
SMACNA-06	(1995) HVAC Duct Construction Standards - Metal and Flexible
SMACNA-10	(1985) HVAC Air Duct Leakage Test Manual

UNDERWRITERS LABORATORIES (UL)

UL-01	(1996; Supple) Building Materials Directory
UL-05	(1996; Supple) Fire Resistance Directory (3 Vol.)

UL 181	(1996; Rev Oct 1996) Factory-Made Air Ducts and Air Connectors
UL 214	(1993) Tests for Flame-Propagation of Fabrics and Films
UL 555	(1995) Fire Dampers
UL 586	(1996) High-Efficiency, Particulate, Air Filter Units
UL 723	(1993; Rev Apr 1994) Test for Surface Burning Characteristics of Building Materials
UL 900	(1994) Test Performance of Air Filter Units
UL 1995	(1995) Heating and Cooling Equipment

1.2 COORDINATION OF TRADES

Ductwork, piping offsets, fittings, and accessories shall be furnished as required to provide a complete installation and to eliminate interference with other construction.

1.3 DELIVERY AND STORAGE

Equipment delivered and placed in storage shall be stored with protection from the weather, humidity and temperature variations, dirt and dust, or other contaminants.

1.4 SUBMITTALS

Government approval is required for submittals with a "GA" designation; submittals having an "FIO" designation are for information only. The following shall be submitted in accordance with Section 01300 SUBMITTAL PROCEDURES:

SD-01 Data

Components and Equipment Data; As Indicated.

Manufacturer's catalog data shall be included with the detail drawings for the following items. The data shall be highlighted to show model, size, options, etc., that are intended for consideration. Data shall be adequate to demonstrate compliance with contract requirements for the following:

a. Piping Components; FIO

b. Ductwork Components; FIO

c. Air Systems Equipment; FIO

d. Air Handling Units; GA

f. Terminal Units; FIO

SD-04 Drawings

Air Supply, Distribution, Ventilation, and Exhaust Equipment; FIO.

Drawings shall consist of equipment layout including assembly and installation details and electrical connection diagrams; ductwork layout showing the location of all supports and hangers, typical hanger details, gauge reinforcement, reinforcement spacing rigidity classification, and static pressure and seal classifications; and piping layout showing the location of all guides and anchors, the load imposed on each support or anchor, and typical support details. Drawings shall include any information required to demonstrate that the system has been coordinated and will properly function as a unit and shall show equipment relationship to other parts of the work, including clearances required for operation and maintenance.

SD-06 Instructions

Test Procedures; FIO.

Proposed test procedures for piping hydrostatic test, ductwork leak test, and performance tests of systems, at least 2 weeks prior to the start of related testing.

Welding Procedures; FIO.

A copy of qualified welding procedures, at least 2 weeks prior to the start of welding operations.

System Diagrams; GA.

Proposed diagrams, at least 2 weeks prior to start of related testing. System diagrams that show the layout of equipment, piping, and ductwork, and typed condensed operation manuals explaining preventative maintenance procedures, methods of checking the system for normal, safe operation, and procedures for safely starting and stopping the system shall be framed under glass or laminated plastic. After approval, these items shall be posted where directed.

SD-07 Schedules

Test Schedules; FIO.

Proposed test schedules for hydrostatic test of piping, ductwork leak test, and performance tests, at least 2 weeks prior to the start of related testing.

Field Training Schedule; FIO.

Proposed schedule for field training, at least 2 weeks prior to the start of related training.

SD-08 Statements

Similar Services; FIO.

Statement demonstrating successful completion of similar services on at least 5 projects of similar size and scope, at least 2 weeks prior to submittal of other items required by this section.

Welding Qualification; FIO.

A list of names and identification symbols of qualified welders and welding operators, at least 2 weeks prior to the start of welding operations.

SD-09 Reports

Test Reports; FIO.

Test reports for the piping hydrostatic test, ductwork leak test, and performance tests in booklet form, upon completion of testing. Reports shall document phases of tests performed including initial test summary, repairs/adjustments made, and final test results.

SD-13 Certificates

Bolts; FIO.

Written certification from the bolt manufacturer that the bolts furnished comply with the requirements of this specification. The certification shall include illustrations of product markings, and the number of each type of bolt to be furnished.

SD-19 Operation and Maintenance Manuals

Air Supply, Distribution, Ventilation, and Exhaust Manuals; FIO.

Six manuals listing step-by-step procedures required for system startup, operation, shutdown, and routine maintenance, at least 2 weeks prior to field training. The manuals shall include the manufacturer's name, model number, parts list, list of parts and tools that should be kept in stock by the owner for routine maintenance including the name of a local supplier, simplified wiring and controls diagrams, troubleshooting guide, and recommended service organization (including address and telephone number) for each item of equipment. Each service organization submitted shall be capable of providing 4 hour onsite response to a service call on an emergency basis.

PART 2 PRODUCTS

2.1 STANDARD PRODUCTS

Components and equipment shall be standard products of a manufacturer regularly engaged in the manufacturing of products that are of a similar material, design and workmanship. The standard products shall have been in satisfactory commercial or industrial use for 2 years before bid opening. The 2-year experience shall include applications of components and equipment under similar circumstances and of similar size. The 2 years must be satisfactorily completed by a product which has been sold or is offered for sale on the commercial market through advertisements, manufacturers' catalogs, or brochures. Products having less than a 2-year field service record will be acceptable if a certified record of satisfactory field operation, for not less than 6000 hours exclusive of the manufacturer's

factory tests, can be shown. The equipment items shall be supported by a service organization.

2.2 ASBESTOS PROHIBITION

Asbestos and asbestos-containing products shall not be used.

2.3 NAMEPLATES

Equipment shall have a nameplate that identifies the manufacturer's name, address, type or style, model or serial number, and catalog number.

2.4 EQUIPMENT GUARDS AND ACCESS

Belts, pulleys, chains, gears, couplings, projecting setscrews, keys, and other rotating parts exposed to personnel contact shall be fully enclosed or guarded according to OSHA requirements. High temperature equipment and piping exposed to contact by personnel or where it creates a potential fire hazard shall be properly guarded or covered with insulation of a type specified. Catwalks, operating platforms, ladders, and guardrails shall be provided where shown and shall be constructed according to Section 05500 MISCELLANEOUS METAL.

2.5 PIPING COMPONENTS

2.5.1 Steel Pipe

Steel pipe shall conform to ASTM A 53, Schedule 40, Grade A or B, Type E or S.

2.5.2 Joints and Fittings For Steel Pipe

Joints shall be welded, flanged, or threaded as indicated. If not otherwise indicated, piping 25 mm and smaller shall be threaded; piping larger than 25 mm and smaller than 80 mm shall be either threaded, or welded; and piping 80 mm and larger shall be welded, or flanged. The manufacturer of each fitting shall be permanently identified on the body of the fitting according to MSS SP-25.

2.5.2.1 Welded Joints and Fittings

Welded fittings shall conform to ASTM A 234, and shall be identified with the appropriate grade and marking symbol. Butt-welded fittings shall conform to ASME B16.9. Socket-welded fittings shall conform to ASME B16.11.

2.5.2.2 Flanged Joints and Fittings

Flanges shall conform to ASTM A 181 and ASME B16.5, Class 150. Gaskets shall be nonasbestos compressed material according to ASME B16.21, 2.0 mm thickness, full face or self-centering flat ring type. The gaskets shall contain aramid fibers bonded with styrene butadiene rubber (SBR) or nitrile butadiene rubber (NBR). Bolts, nuts, and bolt patterns shall conform to ASME B16.5. Bolts shall be high or intermediate strength material conforming to ASTM A 193.

2.5.2.3 Threaded Joints and Fittings

Threads shall conform to ASME B1.20.1. Unions shall conform to ASME B16.39, Class 150. Nipples shall conform to ASTM A 733. Malleable iron fittings shall conform to ASME B16.3, type as required to match piping.

2.5.2.4 Dielectric Unions and Flanges

Dielectric unions shall have the tensile strength and dimensional requirements specified. Unions shall have metal connections on both ends threaded to match adjacent piping. Metal parts of dielectric unions shall be separated with a nylon insulator to prevent current flow between dissimilar metals. Unions shall be suitable for the required operating pressures and temperatures. Dielectric flanges shall provide the same pressure ratings as standard flanges and provide complete electrical isolation.

2.5.3 Copper Tube

Copper tube shall conform to ASTM B 88, Type K or L.

2.5.4 Joints and Fittings For Copper Tube

Wrought copper and bronze solder-joint pressure fittings shall conform to ASME B16.22 and ASTM B 75. Cast copper alloy solder-joint pressure fittings shall conform to ASME B16.18. Cast copper alloy fittings for flared copper tube shall conform to ASME B16.26 and ASTM B 62. Brass or bronze adapters for brazed tubing may be used for connecting tubing to flanges and to threaded ends of valves and equipment. Joints shall be brazed. Extracted brazed tee joints produced with an acceptable tool and installed as recommended by the manufacturer may be used.

2.5.5 Valves

Valves shall be Class 125 and shall be suitable for the intended application. Valves shall meet the material, fabrication and operating requirements of ASME B31.1. Chain operators shall be provided for valves located 3 meters or higher above the floor.

2.5.5.1 Gate Valves

Gate valves 65 mm and smaller shall conform to MSS SP-80 and shall be bronze with rising stem and threaded, solder, or flanged ends. Gate valves 80 mm and larger shall conform to MSS SP-70 and shall be cast iron with bronze trim, outside screw and yoke, and flanged or threaded ends.

2.5.5.2 Globe Valves

Globe valves 65 mm and smaller shall conform to MSS SP-80, bronze, threaded, soldered, or flanged ends. Globe valves 80 mm and larger shall conform to MSS SP-85 and shall be cast iron with bronze trim and flanged, or threaded ends.

2.5.5.3 Check Valves

Check valves 65 mm and smaller shall conform to MSS SP-80 and shall be bronze with threaded, soldered, or flanged ends. Check valves 80 mm and

larger shall conform to MSS SP-71 and shall be cast iron with bronze trim and flanged or threaded ends.

2.5.5.4 Angle Valves

Angle valves 65 mm and smaller shall conform to MSS SP-80 and shall be bronze with threaded, soldered, or flanged ends. Angle valves 80 mm and larger shall conform to MSS SP-85 and shall be cast iron with bronze trim and flanged, or threaded ends.

2.5.5.5 Ball Valves

Ball valves 15 mm and larger shall conform to MSS SP-72 or MSS SP-110, and shall be ductile iron or bronze with threaded, soldered, or flanged ends.

2.5.5.6 Butterfly Valves

Butterfly valves shall be 2 flange or lug wafer type, and shall be bubble-tight at 1.03 MPa. Valve bodies shall be cast iron, malleable iron, or steel. ASTM A 167, Type 404 or Type 316, corrosion resisting steel stems, bronze or corrosion resisting steel discs, and synthetic rubber seats shall be provided. Valves smaller than 200 mm shall have throttling handles with a minimum of seven locking positions. Valves 200 mm and larger shall have totally enclosed manual gear operators with adjustable balance return stops and position indicators. Valves in insulated lines shall have extended neck to accommodate insulation thickness.

2.5.5.7 Balancing Valves

Balancing valves 50 mm or smaller shall be bronze with NPT connections for black steel pipe and brazed connections for copper tubing. Valves 25 mm or larger may be all iron with threaded or flanged ends. The valves shall have a square head or similar device and an indicator arc and shall be designed for 120 degrees C. Iron valves shall be lubricated, nonlubricated, or tetrafluoroethylene resin-coated plug valves. In lieu of plug valves, ball valves may be used. Plug valves and ball valves 200 mm or larger shall be provided with manual gear operators with position indicators. In lieu of balancing valves specified, automatic flow control valves may be provided to maintain constant flow, and shall be designed to be sensitive to pressure differential across the valve to provide the required opening. Valves shall be selected for the flow required and provided with a permanent nameplate or tag carrying a permanent record of the factory-determined flow rate and flow control pressure levels. Valves shall control the flow within 5 percent of the tag rating. Valves shall be suitable for the maximum operating pressure of 862 kPa or 150 percent of the system operating pressure, whichever is the greater. Where the available system pressure is not adequate to provide the minimum pressure differential that still allows flow control, the system pump head capability shall be appropriately increased. Where flow readings are provided by remote or portable meters, valve bodies shall be provided with tapped openings and pipe extensions with shutoff valves outside of pipe insulation. The pipe extensions shall be provided with quick connecting hose fittings for a portable meter to measure the pressure differential across the automatic flow control valve. A portable meter furnished with accessory kit as recommended by the automatic valve manufacturer shall be provided. Automatic flow control valve specified may be substituted for venturi tubes or orifice plate flow measuring devices.

2.5.5.8 Air Vents

Manual air vents shall be brass or bronze valves or cocks suitable for pressure rating of piping system and furnished with threaded plugs or caps. Automatic air vents shall be float type, cast iron, stainless steel, or forged steel construction, suitable for pressure rating of piping system.

2.5.6 Strainers

Strainer shall be in accordance with ASTM F 1199 ASTM F 1200, except as modified herein. Strainer shall be the cleanable, basket or "Y" type, the same size as the pipeline. The strainer bodies shall be fabricated of cast iron with bottoms drilled, and tapped. The bodies shall have arrows clearly cast on the sides indicating the direction of flow. Each strainer shall be equipped with removable cover and sediment screen. The screen shall be made of minimum 0.8 mm monel, with small perforations numbering not less than 60 per square centimeter to provide a net free area through the basket of at least 3,300 times that of the entering pipe. The flow shall be into the screen and out through the perforations.

2.5.7 Chilled Water System Accessories

Chilled water system accessories such as pumps, combination strainer and suction diffusers, and expansion tanks shall be as specified in Section 15650 CENTRAL REFRIGERATED AIR CONDITIONING SYSTEM.

2.5.8 Water Heating System Accessories

Water or steam heating accessories such as expansion tanks and steam traps shall be as specified in Section 15569 WATER AND STEAM HEATING; OIL, GAS OR BOTH; UP TO 20 MBTUH.

2.5.9 Backflow Preventers

Backflow preventers shall be according to Section 15400 PLUMBING, GENERAL PURPOSE.

2.5.10 Flexible Pipe Connectors

Flexible pipe connectors shall be designed for 862 kPa or 1034 kPa service as appropriate for the static head plus the system head, and 120 degrees C, 110 degrees C for grooved end flexible connectors. The flexible section shall be constructed of rubber, tetrafluoroethylene resin, or corrosion-resisting steel, bronze, monel, or galvanized steel. The flexible section shall be suitable for intended service with end connections to match adjacent piping. Flanged assemblies shall be equipped with limit bolts to restrict maximum travel to the manufacturer's standard limits. Unless otherwise indicated, the length of the flexible connectors shall be as recommended by the manufacturer for the service intended. Internal sleeves or liners, compatible with circulating medium, shall be provided when recommended by the manufacturer. Covers to protect the bellows shall be provided where indicated.

2.5.11 Pressure Gauges

Gauges shall conform to ASME B40.1 and shall be provided with throttling type needle valve or a pulsation dampener and shut-off valve. Gauge shall

be a minimum of 85 mm in diameter and shall have a range from 0 kPa to approximately 1.5 times the maximum system working pressure.

2.5.12 Thermometers

Thermometers shall have brass, malleable iron, or aluminum alloy case and frame, clear protective face, permanently stabilized glass tube with indicating-fluid column, white face, black numbers, and a 225 mm scale, and shall have rigid stems with straight, angular, or inclined pattern.

2.5.13 Escutcheons

Escutcheons shall be chromium-plated iron or chromium-plated brass, either one piece or split pattern, held in place by internal spring tension or setscrews.

2.5.14 Pipe Hangers, Inserts, and Supports

Pipe hangers, inserts, and supports shall conform to MSS SP-58 and MSS SP-69.

2.5.15 Expansion Joints

2.5.15.1 Slip Joints

Expansion joints shall provide for either single or double slip of the connected pipes, as required or indicated, and for not less than the traverse indicated. The joints shall be designed for working temperature and pressure suitable for the application, but not less than 1034 kPa, and shall be according to applicable requirements of EJMA-01 and ASME B31.1. End connections shall be flanged or beveled for welding as indicated. Joint shall be provided with an anchor base where required or indicated. Where adjoining pipe is carbon steel, the sliding slip shall be seamless steel plated with a minimum of 0.058 mm of hard chrome according to ASTM B 650. All joint components shall be suitable for the intended service. Initial setting shall be made according to the manufacturer's recommendations to compensate for ambient temperature at time of installation. Pipe alignment guides shall be installed as recommended by the joint manufacturer, but in any case shall be not more than 1.5 m from expansion joint except that in lines 100 mm or smaller, guides shall be installed not more than 600 mm from the joint. Service outlets shall be provided where indicated.

2.5.15.2 Flexible Ball Joints

Flexible ball joints shall conform to EJMA-01 and ASME B31.1 and be constructed of alloys as appropriate for the service intended. Where so indicated, the ball joint shall be designed for packing injection under full line pressure to contain leakage. The joint ends shall be threaded to 50 mm only, flanged, or beveled for welding as indicated or required and shall be capable of absorbing a minimum of 15-degree angular flex and 360 degree rotation. Balls and sockets shall be suitable for the intended service. The exterior spherical surface of carbon steel balls shall be plated with mils of hard chrome according to ASTM B 650. The ball type joints shall be designed and constructed according to EJMA-01 and ASME B31.1 where applicable. Where required, flanges shall conform to ASME B16.5.

2.5.15.3 Bellows Type Joints

Bellows type joints shall be flexible, guided expansion joints. The expansion element shall be stabilized corrosion resistant steel. Bellows type expansion joints shall conform to the applicable requirements of EJMA-01 with internal sleeves. Guiding of piping on both sides of expansion joint shall be according to the published recommendations of the manufacturer of the expansion joint. The joints shall be designed for the working temperature and pressure suitable for the application but not less than 1034 kPa.

2.5.16 Insulation

Shop and field applied insulation shall be as specified in Section 15250 THERMAL INSULATION FOR MECHANICAL SYSTEMS.

2.5.17 Condensate Drain Lines

Condensate drainage shall be provided for each item of equipment that generates condensate as specified for drain, waste, and vent piping systems in Section 15400 PLUMBING, GENERAL PURPOSE.

2.6 ELECTRICAL WORK

Electrical motor-driven equipment specified shall be provided complete with motor, motor starter, and controls. Unless otherwise specified, electric equipment, including wiring and motor efficiencies, shall be according to Section 16415 ELECTRICAL WORK, INTERIOR. Electrical characteristics and enclosure type shall be as shown. Unless otherwise indicated, motors of 745 W and above shall be high efficiency type. Motor starters shall be provided complete with thermal overload protection and other appurtenances necessary. Each motor shall be according to NEMA MG 1 and shall be of sufficient size to drive the equipment at the specified capacity without exceeding the nameplate rating of the motor. Manual or automatic control and protective or signal devices required for the operation specified, and any control wiring required for controls and devices, but not shown, shall be provided. Where two-speed or variable-speed motors are indicated, solid-state variable-speed controller may be provided to accomplish the same function. Solid-state variable-speed controllers shall be utilized for motors rated 7.45 kW or less. Adjustable frequency drives shall be used for larger motors.

2.7 CONTROLS

Controls shall be provided as specified in Section 15950 HEATING, VENTILATING AND AIR CONDITIONING (HVAC) CONTROL SYSTEMS.

2.8 DUCTWORK COMPONENTS

2.8.1 Metal Ductwork

All aspects of metal ductwork construction, including all fittings and components, shall comply with SMACNA-06 unless otherwise specified. Elbows shall be radius type with a centerline radius of 1-1/2 times the width or diameter of the duct where space permits. Otherwise, elbows having a minimum radius equal to the width or diameter of the duct or square elbows with factory fabricated turning vanes may be used. Static pressure Class

125, 250, and 500 Pa ductwork shall meet the requirements of Seal Class C. Class 750 through 2500 Pashall meet the requirements of Seal Class A. Sealants shall conform to fire hazard classification specified in Section 15250 THERMAL INSULATION FOR MECHANICAL SYSTEMS. Pressure sensitive tape shall not be used as a sealant. Spiral lock seam duct, and flat oval shall be made with duct sealant and locked with not less than 3 equally spaced drive screws or other approved methods indicated in SMACNA-06. The sealant shall be applied to the exposed male part of the fitting collar so that the sealer will be on the inside of the joint and fully protected by the metal of the duct fitting. One brush coat of the sealant shall be applied over the outside of the joint to at least 50 mm band width covering all screw heads and joint gap. Dents in the male portion of the slip fitting collar will not be acceptable. Outdoor air intake ducts and plenums shall be fabricated with watertight soldered or brazed joints and seams.

2.8.1.1 Transitions

Diverging air flow transitions shall be made with each side pitched out a maximum of 15 degrees, for an included angle of 30 degrees. Transitions for converging air flow shall be made with each side pitched in a maximum of 30 degrees, for an included angle of 60 degrees, or shall be as indicated. Factory-fabricated reducing fittings for systems using round duct sections when formed to the shape of the ASME short flow nozzle, need not comply with the maximum angles specified.

2.8.1.2 Insulated Nonmetallic Flexible Duct Runouts

Flexible duct runouts shall be used only where indicated. Runout length shall be as shown on the drawings, but shall in no case exceed 3 m. Runouts shall be preinsulated, factory fabricated, and shall comply with NFPA 90A and UL 181. Either field or factory applied vapor barrier shall be provided. Where coil induction or high velocity units are supplied with vertical air inlets, a streamlined and vaned and mitered elbow transition piece shall be provided for connection to the flexible duct or hose. The last elbow to these units, other than the vertical air inlet type, shall be a die-stamped elbow and not a flexible connector. Insulated flexible connectors may be used as runouts. The insulated material and vapor barrier shall conform to the requirements of Section 15250 THERMAL INSULATION FOR MECHANICAL SYSTEMS. The insulation material surface shall not be exposed to the air stream.

2.8.1.3 General Service Duct Connectors

A flexible duct connector approximately 150 mm in width shall be provided where sheet metal connections are made to fans or where ducts of dissimilar metals are connected. For round/oval ducts, the flexible material shall be secured by stainless steel or zinc-coated, iron clinch-type draw bands. For rectangular ducts, the flexible material locked to metal collars shall be installed using normal duct construction methods. The composite connector system shall comply with UL 214 and be classified as "flame-retarded fabrics" in UL-01.

2.8.2 Ductwork Accessories

2.8.2.1 Duct Access Doors

Access doors shall be provided in ductwork and plenums where indicated and at all air flow measuring primaries, automatic dampers, fire dampers, coils, thermostats, and other apparatus requiring service and inspection in the duct system, and unless otherwise shown, shall conform to SMACNA-06. Access doors shall be provided upstream and downstream of air flow measuring primaries and heating and cooling coils. Doors shall be minimum 375 x 450 mm, unless otherwise shown. Where duct size will not accommodate this size door, the doors shall be made as large as practicable. Doors 600 x 600 mm or larger shall be provided with fasteners operable from both sides. Doors in insulated ducts shall be the insulated type.

2.8.2.2 Fire Dampers

Fire dampers shall be 1-1/2 hour fire rated unless otherwise indicated. Fire dampers shall conform to the requirements of NFPA 90A and UL 555. Fire dampers shall be automatic operating type and shall have a dynamic rating suitable for the maximum air velocity and pressure differential to which it will be subjected. Fire dampers shall be approved for the specific application, and shall be installed according to their listing. Fire dampers shall be equipped with a steel sleeve or adequately sized frame installed in such a manner that disruption of the attached ductwork, if any, will not impair the operation of the damper. Sleeves or frames shall be equipped with perimeter mounting angles attached on both sides of the wall or floor opening. Ductwork in fire-rated floor-ceiling or roof-ceiling assembly systems with air ducts that pierce the ceiling of the assemblies shall be constructed in conformance with UL-05. Fire dampers shall be curtain type with damper blades out of the air stream. Dampers shall not reduce the duct or the air transfer opening cross-sectional area. Dampers shall be installed so that the centerline of the damper depth or thickness is located in the centerline of the wall, partition or floor slab depth or thickness. Unless otherwise indicated, the installation details given in SMACNA-05 and in manufacturer's instructions for fire dampers shall be followed.

2.8.2.3 Splitters and Manual Balancing Dampers

Splitters and manual balancing dampers shall be furnished with accessible operating mechanisms. Where operators occur in finished portions of the building, operators shall be chromium plated with all exposed edges rounded. Splitters shall be operated by quadrant operators or 5 mm rod brought through the side of the duct with locking setscrew and bushing. Two rods are required on splitters over 200 mm. Manual volume control dampers shall be operated by locking-type quadrant operators. Dampers and splitters shall be 2 gauges heavier than the duct in which installed. Unless otherwise indicated, multileaf dampers shall be opposed blade type with maximum blade width of 300 mm. Access doors or panels shall be provided for all concealed damper operators and locking setscrews. Unless otherwise indicated, the locking-type quadrant operators for dampers, when installed on ducts to be thermally insulated, shall be provided with stand-off mounting brackets, bases, or adapters to provide clearance between the duct surface and the operator not less than the thickness of the insulation. Stand-off mounting items shall be integral with the operator or standard accessory of the damper manufacturer. Volume dampers shall be provided where indicated.

2.8.2.4 Air Deflectors and Branch Connections

Air deflectors shall be provided at duct mounted supply outlets, at takeoff or extension collars to supply outlets, at duct branch takeoff connections, and at 90 degree elbows, as well as at locations as indicated on the drawings or otherwise specified. Conical branch connections or 45 degree entry connections may be used in lieu of deflectors or extractors for branch connections. All air deflectors, except those installed in 90 degree elbows, shall be provided with an approved means of adjustment. Adjustment shall be made from easily accessible means inside the duct or from an adjustment with sturdy lock on the face of the duct. When installed on ducts to be thermally insulated, external adjustments shall be provided with stand-off mounting brackets, integral with the adjustment device, to provide clearance between the duct surface and the adjustment device not less than the thickness of the thermal insulation. Air deflectors shall be factory-fabricated units consisting of curved turning vanes or louver blades designed to provide uniform air distribution and change of direction with minimum turbulence or pressure loss. Air deflectors shall be factory or field assembled. Blade air deflectors, also called blade air extractors, shall be approved factory fabricated units consisting of equalizing grid and adjustable blade and lock. Adjustment shall be easily made from the face of the diffuser or by position adjustment and lock external to the duct. Stand-off brackets shall be provided on insulated ducts and are described herein. Fixed air deflectors, also called turning vanes, shall be provided in 90 degree elbows.

2.8.3 Duct Sleeves, Framed Prepared Openings, Closure Collars

2.8.3.1 Duct Sleeves

Duct sleeves shall be provided for round ducts 375 mm in diameter or less passing through floors, walls, ceilings, or roof, and installed during construction of the floor, wall, ceiling, or roof. Round ducts larger than 375 mm in diameter and square, rectangular, and oval ducts passing through floors, walls, ceilings, or roof shall be installed through framed prepared openings. The Contractor shall be responsible for the proper size and location of sleeves and prepared openings. Sleeves and framed openings are also required where grilles, registers, and diffusers are installed at the openings. Framed prepared openings shall be fabricated from 1.0 mm galvanized steel, unless otherwise indicated. Where sleeves are installed in bearing walls or partitions, black steel pipe, ASTM A 53, Schedule 20 shall be used. Sleeve shall provide 25 mm clearance between the duct and the sleeve or 25 mm clearance between the insulation and the sleeve for insulated ducts.

2.8.3.2 Framed Prepared Openings

Openings shall have 25 mm clearance between the duct and the opening or 25 mm clearance between the insulation and the opening for insulated ducts.

2.8.3.3 Closure Collars

Collars shall be fabricated of galvanized sheet metal not less than 100 mm wide, unless otherwise indicated, and shall be installed on exposed ducts on each side of walls or floors where sleeves or prepared openings are provided. Collars shall be installed tight against surfaces. Collars shall fit snugly around the duct or insulation. Sharp edges of the collar around

insulated duct shall be ground smooth to preclude tearing or puncturing the insulation covering or vapor barrier. Collars for round ducts 375 mm in diameter or less shall be fabricated from 1.0 mm galvanized steel. Collars for round ducts larger than 375 mm and square, and rectangular ducts shall be fabricated from 1.3 mm galvanized steel. Collars shall be installed with fasteners on maximum 150 mm centers, except that not less than 4 fasteners shall be used.

2.8.4 Sound Attenuation Equipment

a. Acoustical Duct Liner:

Acoustical duct lining shall be fibrous glass designed exclusively for lining ductwork and shall conform to the requirements of ASTM C 1071, Type I and II. Liner composition may be uniform density, graduated density, or dual density, as standard with the manufacturer. Lining shall be coated, not less than 25 mm thick. Where acoustical duct liner is used, liner or combination of liner and insulation applied to the exterior of the ductwork shall be the thermal equivalent of the insulation specified in Section 15250 THERMAL INSULATION FOR MECHANICAL SYSTEMS. Duct sizes shown shall be increased to compensate for the thickness of the lining used. In lieu of sheet metal duct with field-applied acoustical lining, acoustically equivalent lengths of fibrous glass duct or factory fabricated double-walled internally insulated duct with perforated liner may be provided. Net insertion loss value, static pressure drop, and air flow velocity capacity data shall be certified by a nationally recognized independent acoustical laboratory.

2.8.5 Diffusers, Registers, and Grilles

Units shall be factory-fabricated of steel, corrosion-resistant steel, or aluminum and shall distribute the specified quantity of air evenly over space intended without causing noticeable drafts, air movement faster than 0.25 m/s in occupied zone, or dead spots anywhere in the conditioned area. Outlets for diffusion, spread, throw, and noise level shall be as required for specified performance. Performance shall be certified according to ASHRAE 70. Inlets and outlets shall be sound rated and certified according to ASHRAE 70. Sound power level shall be as indicated. Diffusers and registers shall be provided with volume damper with accessible operator, unless otherwise indicated; or if standard with the manufacturer, an automatically controlled device will be acceptable. Volume dampers shall be opposed blade type for all diffusers and registers, except linear slot diffusers. Linear slot diffusers shall be provided with round or elliptical balancing dampers. Where the inlet and outlet openings are located less than 2 m above the floor, they shall be protected by a grille or screen according to NFPA 90A.

2.8.5.1 Diffusers

Linear diffusers shall be fabricated of extruded aluminum and shall be suitable for lay-in ceilings. Linear diffusers shall be pattern adjustable and of the size indicated. Linear diffusers shall be equipped with a factory insulated plenum. Square ceiling diffusers shall be of the solid panel face design. Round diffusers shall be the louvered face type and shall be adjustable. Diffuser types shall be as indicated. Ceiling mounted units shall be furnished with anti-smudge devices, unless the diffuser unit minimizes ceiling smudging through design features. Diffusers shall be

provided with air deflectors of the type indicated. Ceiling mounted units shall be installed with rims tight against ceiling. Sponge rubber gaskets shall be provided between ceiling and surface mounted diffusers for air leakage control. Suitable trim shall be provided for flush mounted diffusers. Duct collar connecting the duct to diffuser shall be airtight and shall not interfere with volume controller. Return or exhaust units shall be similar to supply diffusers.

2.8.5.2 Return and Exhaust Registers and Grilles

Return and exhaust registers shall be fixed horizontal or vertical louver type with blades on 19 mm centers and set at 35 degrees. Registers shall be provided with sponge-rubber gasket between flanges and wall or ceiling. Grilles shall be as specified for registers, without volume control dampers.

2.8.5.3 Supply Grilles

Units shall be of the double deflection type with adjustable blades on 75 mm centers. Blades shall be of the airfoil design for high flow industrial use.

2.8.5.4 Exhaust Outlets

Soffit mounted exhaust outlets shall be constructed of all aluminum with 15 mm x 15 mm x 15 mm aluminum cores, 1.5 mm square mesh insert screen, surface mounted.

2.8.6 Louvers

Fixed drainable blade type. The edges of louver blades shall be formed to exclude driving rain. Louvers blades shall be 150 mm deep and oriented to minimize the entrainment of rainwater. Make louver frames and blades of 2.06 mm thick extruded aluminum alloy. Provide bird screens. Louver shall pass a maximum free area velocity of 4.0 L/S with less than 23.0 Pa pressure drop. Provide factory applied baked enamel finish to match the adjacent finishes. Louvers shall be certified in accordance with AMCA 511.

2.8.6.1 Bird Screens and Frames

Bird screens shall conform to ASTM E 437, Type I, Class I, 2 by 2 mesh, 1.6 mm diameter aluminum wire or 0.8 mm diameter stainless steel wire. Frames shall be removable type or stainless steel or extruded aluminum.

2.8.7 Counter Balanced Backdraft Dampers

Frames shall be constructed of 3.175 mm thick extruded aluminum with 12 gage galvanized steel structural brace at each corner. Blades shall be 1.78 mm thick aluminum with extruded vinyl blade edge seals mechanically locked into blade edge. Blades shall include field adjustable, zinc plated steel counterbalance weights to allow pressure relief at less than 2.49 Pa.

2.9 IDENTIFICATION OF EQUIPMENT

At the time of final acceptance by the Owner, all equipment shown on the mechanical drawings shall be clearly and neatly identified by engraved laminated plastic nameplates with a minimum 25.4 mm high lettering using a color that will contrast with the surface to which it is affixed. Oil and

debris shall be cleaned from surface with acetone solvent or other compatible cleaner for surface used. Install nameplate to equipment using permanent liquid contact adhesive. Identification shall use the same abbreviations and number shown on the drawings.

2.10 AIR SYSTEMS EQUIPMENT

2.10.1 Fans

Fans shall be tested and rated according to AMCA 210. Fans may be connected to the motors either directly or indirectly with V-belt drive. V-belt drives shall be designed for not less than 150 140 120 percent of the connected driving capacity. Motor sheaves shall be variable pitch for 11 kW and below and fixed pitch as defined by ARI Guideline D. Variable pitch sheaves shall be selected to drive the fan at a speed which will produce the specified capacity when set at the approximate midpoint of the sheave adjustment. When fixed pitch sheaves are furnished, a replaceable sheave shall be provided when needed to achieve system air balance. Motors for V-belt drives shall be provided with adjustable rails or bases. Removable metal guards shall be provided for all exposed V-belt drives, and speed-test openings shall be provided at the center of all rotating shafts. Fans shall be provided with personnel screens or guards on both suction and supply ends, except that the screens need not be provided, unless otherwise indicated, where ducts are connected to the fan. Fan and motor assemblies shall be provided with vibration-isolation supports or mountings as indicated. Vibration-isolation units shall be standard products with published loading ratings. Each fan shall be selected to produce the capacity required at the fan static pressure indicated. Sound power level shall be as indicated. The sound power level values shall be obtained according to AMCA 300. Standard AMCA arrangement, rotation, and discharge shall be as indicated.

2.10.1.1 In-Line Centrifugal Fans

In-line fans shall have centrifugal backward inclined blades, stationary discharge conversion vanes, internal and external belt guards, and adjustable motor mounts. Fans shall be mounted in a welded tubular casing. Air shall enter and leave the fan axially. Inlets shall be streamlined with conversion vanes to eliminate turbulence and provide smooth discharge air flow. Fan bearings and drive shafts shall be enclosed and isolated from the air stream. Fan bearings shall be sealed against dust and dirt and shall be permanently lubricated, and shall be precision self aligning ball or roller type. Bearing life shall be L50 rated at not less than 200,000 hours as defined by ABEMA 9 and ABEMA 11. Motors shall have open dripproof enclosure. Motor starters shall be magnetic across-the-line with general-purpose enclosures.

2.10.1.2 Panel Type Power Wall Ventilators

Fans shall be propeller type, assembled on a reinforced metal panel with venturi opening spun into panel. Fans with wheels less than 600 mm diameter shall be direct or V-belt driven and fans with wheels 600 mm diameter and larger shall be V-belt drive type. Fans shall be furnished with wall mounting collar. Lubricated bearings shall be provided. Fans shall be fitted with wheel and motor side metal or wire guards which have a corrosion-resistant finish. Motor enclosure shall be totally enclosed fan cooled type. Motor operated dampers shall be provided where indicated.

2.10.2 Coils

Coils shall be fin-and-tube type constructed of seamless copper red brass tubes and aluminum or copper fins mechanically bonded or soldered to the tubes. Casing and tube support sheets shall be not lighter than 1.6 mm galvanized steel, formed to provide structural strength. When required, multiple tube supports shall be provided to prevent tube sag. Each coil shall be tested at the factory under water at not less than 2.76 MPa air pressure and shall be suitable for 1.38 MPa working pressure. Coils shall be mounted for counterflow service. Coils shall be rated and certified according to ARI 410.

2.10.2.1 Water Coils

Water coils shall be installed with a pitch of not less than 10 mm per meterof the tube length toward the drain end. Headers shall be constructed of cast iron, welded steel or copper. Each coil shall be provided with a plugged vent and drain connection extending through the unit casing.

2.10.3 Air Filters

Air filters shall be listed according to requirements of UL 900, except high efficiency particulate air filters of 99.97 percent efficiency by the DOP Test method shall be as listed under the Label Service and shall meet the requirements of UL 586.

2.10.3.1 Extended Surface Pleated Panel Filters

Filters shall be 50 mm depth, sectional, disposable type of the size indicated and shall have an average efficiency of 25 to 30 percent when tested according to ASHRAE 52.1. Initial resistance at 2.54 m/s shall not exceed 9 mm water gauge. Filters shall be UL Class 2. Media shall be nonwoven cotton and synthetic fiber mat. A wire support grid bonded to the media shall be attached to a moisture resistant fiberboard frame. All four edges of the filter media shall be bonded to the inside of the frame to prevent air bypass and increase rigidity.

2.10.3.2 Filter Gauges

Filter gauges shall be dial type, diaphragm actuated draft and shall be provided for all filter stations, including those filters which are furnished as integral parts of factory fabricated air handling units. Gauges shall be at least 98 mm in diameter, shall have white dials with black figures, and graduations shall be graduated in 0.25 mm, and shall have a minimum range of 25 mm beyond the specified final resistance for the filter bank on which each gauge is applied. Each gauge shall incorporate a screw operated zero adjustment and shall be furnished complete with two static pressure tips with integral compression fittings, two molded plastic vent valves, two 1.5 m minimum lengths of 6.35 mm diameter aluminum tubing, and all hardware and accessories for gauge mounting.

2.11 AIR HANDLING UNITS

2.11.1 Factory-Fabricated Air Handling Units

Units shall be single-zone draw-through type as indicated. Units shall include fans, coils, airtight insulated casing, filters, and diffuser sections where indicated, adjustable V-belt drives, belt guards for externally mounted motors, access sections where indicated, mixing box combination sectional filter-mixing box, vibration-isolators, and appurtenances required for specified operation. Vibration isolators shall be as indicated. Each air handling unit shall have physical dimensions suitable to fit space allotted to the unit and shall have the capacity indicated. Air handling unit shall have published ratings based on tests performed according to ARI 430.

2.11.1.1 Casings

Casing sections shall be single wall type, constructed of a minimum 18 gauge galvanized steel, or 18 gauge steel outer casing protected with a corrosion resistant paint finish according to paragraph FACTORY PAINTING. Casing shall be designed and constructed with an integral structural steel frame such that exterior panels are non-load bearing. Exterior panels shall be individually removable. Removal shall not affect the structural integrity of the unit. Casings shall be provided with inspection doors, access sections, and access doors as indicated. Inspection and access doors shall be insulated, fully gasketed, double-wall type, of a minimum 1.3 mm outer and 1.0 mm inner panels. Doors shall be rigid and provided with heavy duty hinges and latches. Inspection doors shall be a minimum 300 mm wide by 300 mm high. Access doors shall be minimum 600 mm wide and shall be the full height of the unit casing or a minimum of 1800 mm, whichever is less. Access Sections shall be according to paragraph AIR HANDLING UNITS. Drain pan shall be double-bottom type constructed of 16 gauge stainless steel, pitched to the drain connection. Drain pans shall be constructed water tight, treated to prevent corrosion, and designed for positive condensate drainage. When 2 or more cooling coils are used, with one stacked above the other, condensate from the upper coils shall not flow across the face of lower coils. Intermediate drain pans or condensate collection channels and downspouts shall be provided, as required to carry condensate to the unit drain pan out of the air stream and without moisture carryover. Each casing section handling conditioned air shall be insulated with not less than 25 mm thick, 24 kg per cubic meter coated fibrous glass material having a thermal conductivity not greater than 0.033 W/m-K. Factory applied fibrous glass insulation shall conform to ASTM C 1071, except that the minimum thickness and density requirements do not apply, and shall meet the requirements of NFPA 90A. Foam-type insulation is not acceptable. Foil-faced insulation shall not be an acceptable substitute for use on double-wall access doors and inspections doors. Duct liner material, coating, and adhesive shall conform to fire-hazard requirements specified in Section 15250 THERMAL INSULATION FOR MECHANICAL SYSTEMS. Exposed insulation edges and joints where insulation panels are butted together shall be protected with a metal nosing strip or shall be coated to conform to meet erosion resistance requirements of ASTM C 1071. A latched and hinged inspection door, shall be provided in the fan and coil sections. Additional inspection doors, access doors and access sections shall be provided where indicated.

2.11.1.2 Heating and Cooling Coils

Coils shall be provided as specified in paragraph AIR SYSTEMS EQUIPMENT, for types indicated.

2.11.1.3 Cooling Coils, Spray Type

Cooling coils shall be of the copper finned direct expansion water type as specified in paragraph AIR SYSTEMS EQUIPMENT furnished complete with water sprays. All horizontal units and vertical units with coil face velocities of 2.5 m per second or above, shall be provided with moisture eliminators. Sprays shall have all bronze, brass, or stainless steel centrifugal type nozzles, with removable caps designed and arranged for uniform wetting of the entire coil face area. Nozzles shall be supplied by standard weight galvanized steel piping and a centrifugal type circulating pump furnished as an integral part of the unit. Eliminators shall be not lighter than 0.7 mm corrosion-resistant steel, removable for maintenance and coil inspection. No water shall carry over into the fan section or supply ducts from the air handling unit provided with or without eliminators.

2.11.1.4 Air Filters

Air filters shall be as specified in paragraph AIR SYSTEMS EQUIPMENT for types and thickness indicated.

2.11.1.5 Fans

Fans shall be double-inlet, centrifugal type with each fan in a separate scroll. Fans and shafts shall be dynamically balanced prior to installation into air handling unit, then the entire fan assembly shall be statically and dynamically balanced at the factory after it has been installed in the air handling unit. Fans shall be mounted on steel shafts accurately ground and finished. Fan bearings shall be sealed against dust and dirt and shall be precision self-aligning ball or roller type. Bearing life shall be L50 rated at not less than 200,000 hours as defined by ABEMA 9and ABEMA 11. Bearings shall be permanently lubricated or lubricated type with lubrication fittings readily accessible at the drive side of the unit. Bearings shall be supported by structural shapes, or die formed sheet structural members, or support plates securely attached to the unit casing. Bearings may not be fastened directly to the unit sheet metal casing. Fans and scrolls shall be furnished with coating indicated. Fans shall be driven by a unit-mounted or a floor-mounted motor connected to fans by V-belt drive complete with belt guard for externally mounted motors. Belt guards shall be the three sided enclosed type with solid or expanded metal face. Belt drives shall be designed for not less than a 1.3 service factor based on motor nameplate rating. Motor sheaves shall be variable pitch for 20 kW and below and fixed pitch above 20 kW as defined by ARI Guideline D. Where fixed sheaves are required, variable pitch sheaves may be used during air balance, but shall be replaced with an appropriate fixed sheave after air balance is completed. Variable pitch sheaves shall be selected to drive the fan at a speed that will produce the specified capacity when set at the approximate midpoint of the sheave adjustment. Motors for V-belt drives shall be provided with adjustable bases. Fan motors shall have totally enclosed enclosures. Motor starters shall be magnetic across-the-line type with general-purpose enclosure. Unit fan or fans shall be selected to produce the required capacity at the fan static pressure. Sound power level shall be as indicated. The sound power level values shall be obtained according to AMCA 300 or ASHRAE 68.

2.11.1.6 Access Sections and Filter/Mixing Boxes

Access sections shall be provided where indicated and shall be furnished with access doors as shown. Access sections and filter/mixing boxes shall be constructed in a manner identical to the remainder of the unit casing and shall be equipped with access doors. Mixing boxes shall be designed to minimize air stratification and to promote thorough mixing of the air streams.

2.11.1.7 Diffuser Sections

Diffuser sections shall be furnished between the discharge of AHU 1 through AHU 6 fans and the discharge plenum detailed on the drawings. Diffuser sections shall be fabricated by the unit manufacturer in a manner identical to the remainder of the unit casing, shall be designed to be airtight under positive static pressures up to 2 kPa, and shall have an access door on each side for inspection purposes. Diffuser section shall contain a perforated diffusion plate, fabricated of galvanized steel, Type 316 stainless steel, aluminum, or steel treated for corrosion with manufacturer's standard corrosion-resisting finish. The diffusion plate shall be designed to accomplish uniform air flow across the down-stream device while reducing the higher fan outlet velocity to within plus or minus 5 percent of the required face velocity of the downstream component.

2.11.1.8 Dampers

Dampers shall be as specified in paragraph CONTROLS.

2.12 VARIABLE SPEED DRIVES

2.12.1 Variable Speed Drives for Air Handling Units

Variable Speed Drives (VSD) shall produce an adjustable A-C voltage/frequency output for complete motor speed control using transistorized sinecoded PWM Technology, and an input power factor near unity over the entire speed range. The VSD shall not produce excessive or objectional motor acoustical noise, nor shall it induce voltage line notching back to the utility line. The VSD shall be automatically controlled by a grounded electronic 4-20 mA control signal. The VSD shall be self-contained, totally enclosed in a NEMA 1 ventilated cabinet. The VSD shall be 95% efficient at 100% rated output power, 60 Hz. The VSD shall be equipped with an operator control interface with hand/off/auto switch, drive switch with run to stop command, panel mounted digital display indicating unit status, frequency and fault diagnostics. The VSD shall also be equipped with an electronic follower board (4-20 mA). Minimum/Maximum adjustable from 1 to 300 seconds, 50 seconds factory preset. Used shall have a 3-80 Hz controlled speed range, user interface board with terminals for connection of a time clock and safety devices. Protective features shall include current limit provided at 100% of motor FLA, if current exceeds 100% of motor current, the VSD will slow down the motor. If currents continues to rise, the VSD will shutdown on overcurrent. The VSD shall automatically shutdown the motor if current exceeds 180%, Phase-to-Phase output short circuit occurs. The VSD shall also have line-to-line fault protection, electronic overload protection and over temperature protection. The VSD shall be capable of operating up to 3300 ft. elevation without derating 9ø to 40ø temperature range, 90% non-condensing relative humidity, ±205 A-C line frequency variation. The

VSD shall be equipped with thermal overload relay, manual bypass circuit, door interlocked line circuit breaker, line reactor, isolation transformer, and RFI/EMI filter to comply with limits of Part 15, Subpart J of the FCC Rules and Regulations for Class A computer devices. The VSD shall be UL listed and all options shall be UL listed, the VSD shall meet the power line transient conditions defined in IEEE-587 and be protected against line transients as great as 6 kV without failure. VSD design and construction shall comply with current applicable provisions of the national electrical code.

2.13 LEAK DETECTION SYSTEM (AHU #1 - #6)

The leak detection system shall consist of a monitoring panel capable of receiving a minimum 6 separate inputs from a remote direct reading leak detection module connected to a length of water sensing cable. The monitoring panel shall consist of dry contact inputs, and LED. Alarm indicators (red) for each green normal LED indicator, pulsating audible alarm, audible alarm silence pushbutton. Panel shall be capable of alarm retrigger by additional incoming alarms, and automatic reset after alarm correction. The remote leak detection module shall be an enclosed unit with delay output activated on detection of water as sensed by the leak detection cable. Each leak detection module shall be connected to the monitoring panel via a single 2-wire cable. The module shall be supplied with a 24 V transformer for power. The leak detection cable shall be capable of detecting a small amount of water or other conductive fluid in the fan under each AHU, and via the remote module, activate an alarm on the monitoring power indicating which air handling unit has an alarm.

2.14 TERMINAL UNITS

2.14.1 Horizontal Concealed Unit Heaters

Base units shall include galvanized coil casing, coil assembly drain pan air filter, fans, motor, fan drive, and motor switch, plus an enclosure for cabinet models and casing for concealed models. Sound power levels shall be as indicated. Sound power level data or values for these units shall be obtained according to test procedures based on ARI 350. Sound power values apply to units provided with factory fabricated cabinet enclosures and standard grilles. Values obtained for the standard cabinet models will be acceptable for concealed models without separate test provided there is no variation between models as to the coil configuration, blowers, motor speeds, or relative arrangement of parts. Automatic valves and controls shall be provided as specified in paragraph CONTROLS. Each unit shall be fastened securely to the building structure. Capacity of the units shall be as indicated. Units shall be certified as complying with ARI 440, and shall meet the requirements of UL 1995.

2.14.1.1 Enclosures

Enclosures shall be fabricated of not lighter than 1.3 mm steel, reinforced and braced. Front panels of enclosures shall be removable and provided with 13 mm thick dual density fibrous glass insulation. The exposed side shall be high density, erosion-proof material suitable for use in air streams with velocities up to 23 m/s. Ferrous metal surfaces shall be galvanized or factory finished with corrosion resistant enamel. Access doors or removable panels shall be provided for piping and control compartments. Duct

discharge collar shall be provided for concealed models. Enclosures shall have easy access for filter replacement.

2.14.1.2 Fans

Fans shall be galvanized steel or aluminum, multiblade, centrifugal type. In lieu of metal, fans and scrolls may be non-metallic materials of suitably reinforced compounds. Fans shall be dynamically and statically balanced. Surfaces shall be smooth. Assemblies shall be accessible for maintenance. Disassembly and re-assembly shall be by means of mechanical fastening devices and not by epoxies or cements.

2.14.1.3 Coils

Coils shall be constructed of not less than 10 mm outside diameter seamless copper tubing, with copper or aluminum fins mechanically bonded or soldered to the tubes. Coils shall be provided with not less than 12 mm outside diameter flare or sweat connectors, accessory piping package with thermal connections suitable for connection to the type of control valve supplied, and manual air vent. Coils shall be tested hydrostatically at 2000 kPa or under water at 1700 kPa air pressure and suitable for 1400 kPa working pressure. Provisions shall be made for coil removal.

2.14.1.4 Drain Pans

Drain and drip pans shall be sized and located to collect all water condensed on and dripping from any item within the unit enclosure or casing. Drain pans shall be constructed of not lighter than 0.9 mm steel, galvanized after fabrication, thermally insulated to prevent condensation. Insulation shall have a flame spread rating not over 25 without evidence of continued progressive combustion, a smoke developed rating no higher than 50, and shall be of a waterproof type or coated with a waterproofing material. In lieu of the above, drain pans may be constructed of die-formed 0.85 mm steel, formed from a single sheet, galvanized after fabrication, insulated and coated as specified for the 0.9 mm material or of die-formed 0.9 mm type 304 stainless steel, insulated as specified above. Drain pans shall be pitched to drain. Minimum 20 mm NPT or 15 mm OD drain connection shall be provided in drain pan. Auxiliary drain pans to catch drips from control and piping packages, eliminating insulation of the packages, may be plastic; if metal, the auxiliary pans shall comply with the requirements specified above. Insulation at control and piping connections thereto shall extend 25 mm minimum over the auxiliary drain pan.

2.14.1.5 Filters

Filters shall be of the fiberglass disposable type, 25 mm thick, conforming to CID A-A-1419. Filters in each unit shall be removable without the use of tools.

2.14.1.6 Motors

Motors shall be of the permanent split-capacitor type with built-in thermal overload protection, directly connected to unit fans. Motor switch shall be two or three speeds and off, manually operated, and shall be mounted on an identified plate inside the unit below or behind an access door as indicated. In lieu of the above fan speed control, a solid-state variable-speed controller having a minimum speed reduction of 50 percent may be

provided. Motors shall have permanently-lubricated or oilable sleeve-type or combination ball and sleeve-type bearings with vibration isolating mountings suitable for continuous duty. Motor power consumption, shown in watts, at the fan operating speed selected to meet the specified capacity shall not exceed the following values:

Unit Capacity (L/s)	Maximum Power Consumption (Watts)
94	55
142	60
189	65
283	80
378	130
472	130
566	130

2.14.2 Propeller Type Unit Heaters

Propeller unit heaters shall be designed for suspension. The casings shall be constructed of 20-gauge steel minimum. Suitable stationary or rotating air deflectors shall be provided to assure proper air and heat penetration capacity at floor level based on established design temperature. Suspension from heating pipes will not be permitted. Discharge shall be arranged for horizontal flow of air as indicated. Horizontal discharge unit heaters shall have discharge or face velocities not in excess of the following:

Unit Capacity, Liter Per Second	Face Velocity, Meters Per Second
Up to 470	4.0
471 to 1415	4.5
1416 to over	5.0

2.14.2.1 Coils

Coils shall be constructed of not less than 10 mm outside diameter seamless copper tubing, with copper or aluminum fins mechanically bonded or soldered to the tubes. Coils shall be provided with not less than 12 mm outside diameter flare or sweat connectors, accessory piping package with thermal connections suitable for conneciton to the type of control valve supplied, and manual air vent. Coils shall be tested hydrostatically at 2000 kPa or under water at 1700 kPa air pressure and suitable for 1400 kPa working pressure. Provisions shall be made for coil removal.

2.14.3 Variable Air Volume (VAV) Units

VAV units shall be the type, size, and capacity shown and shall be mounted in the ceiling cavity and shall be suitable for single duct system applications. Actuators and controls shall be as specified in paragraph CONTROLS. Unit enclosures shall be constructed of galvanized steel not lighter than 0.85 mm (22 gauge) or aluminum sheet not lighter than 1.3 mm (18 gauge). Single or multiple discharge outlets shall be provided as required. Units with flow limiters are not acceptable. Unit air volume

shall be factory preset and readily field adjustable without special tools. Reheat coils shall be provided as indicated. A flow chart shall be attached to each unit. Acoustic performance of the terminal units shall be based upon units tested according to ARI 880. Sound power level shall be as indicated. Discharge sound power shall be shown for minimum and 375 Pa inlet static pressure. Acoustical lining shall be according to NFPA 90A.

2.14.3.1 Variable Volume, Single Duct

Variable volume, single duct, terminal units shall be provided with a calibrated air volume sensing device, with multiple ports and center point averaging, air valve or damper, actuator, and accessory relays. Units shall control air volume to within plus or minus 5 percent of each air set point volume as determined by the thermostat with variations in inlet pressures from 200 to 1500 Pa. Internal resistance of units shall not exceed 100 Pa water gauge at maximum flow range. External differential pressure taps separate from the control pressure taps shall be provided for air flow measurement with a 0 to 250 Pa range. Unit volume controller shall be normally open upon loss of pneumatic pressure.

2.14.3.2 Reheat Units

a. Hot Water Coils: Hot-water coils shall be fin-and-tube type constructed of seamless copper tubes and copper or aluminum fins mechanically bonded or soldered to the tubes. Headers shall be constructed of cast iron, welded steel or copper. Casing and tube support sheets shall be 1.6 mm, galvanized steel, formed to provide structural strength. Tubes shall be correctly circuited for proper water velocity without excessive pressure drop and they shall be drainable where required or indicated. At the factory, each coil shall be tested at not less than 1700 kPa air pressure and shall be suitable for 1400 kPa working pressure. Drainable coils shall be installed in the air handling units with a pitch of not less than 10 mm per m of tube length toward the drain end. Coils shall conform to the provisions of ARI 410.

PART 3 EXECUTION

3.1 INSTALLATION

Work shall be installed as shown and according to the manufacturer's diagrams and recommendations.

3.1.1 Piping

Pipe and fitting installation shall conform to the requirements of ASME B31.1. Pipe shall be cut accurately to measurements established at the jobsite, and worked into place without springing or forcing, completely clearing all windows, doors, and other openings. Cutting or other weakening of the building structure to facilitate piping installation will not be permitted without written approval. Pipe or tubing shall be cut square, shall have burrs removed by reaming, and shall permit free expansion and contraction without causing damage to the building structure, pipe, joints, or hangers. Changes in direction shall be made with fittings, except that bending of pipe 100 mm and smaller will be permitted, provided a pipe bender is used and wide sweep bends are formed. The centerline radius of bends shall not be less than 6 diameters of the pipe. Bent pipe showing kinks,

wrinkles, flattening, or other malformations will not be accepted. Horizontal supply mains shall pitch down in the direction of flow as indicated. The grade shall be not less than 2 mm in 1 m. Reducing fittings shall be used for changes in pipe sizes. Open ends of pipelines and equipment shall be capped or plugged during installation to keep dirt or other foreign materials out of the system. Pipe not otherwise specified shall be uncoated. Connections to appliances shall be made with malleable iron unions for steel pipe 65 mm or less in diameter, and with flanges for pipe 80 mm and larger. Connections between ferrous and copper piping shall be electrically isolated from each other with dielectric unions or flanges. All piping located in air plenums shall conform to NFPA 90Arequirements. Pipe and fittings installed in inaccessible conduits or trenches under concrete floor slabs shall be welded.

3.1.1.1 Joints

a. Threaded Joints: Threaded joints shall be made with tapered threads and made tight with a stiff mixture of graphite and oil or polytetrafluoroethylene tape or equivalent thread joint compound or material, applied to the male threads only.

b. Soldered Joints: Joints in copper tubing shall be cut square with ends reamed, and all filings and dust wiped from interior of pipe. Joints shall be soldered with 95/5 solder or brazed with silver solder applied and drawn through the full fitting length. Care shall be taken to prevent annealing of tube or fittings when making connections. Joints 65 mm and larger shall be made with heat uniformly around the entire circumference of the joint with a multi-flame torch. Connections in floor slabs shall be brazed. Excess solder shall be wiped from joint before solder hardens.

c. Welded Joints: Welding shall be according to qualified procedures using qualified welders and welding operators. Procedures and welders shall be qualified according to ASME BPV IX. Welding procedures qualified by others and welders and welding operators qualified by another operator may be permitted by ASME B31.1. Structural members shall be welded according to Section 05055 WELDING, STRUCTURAL. All welds shall be permanently identified by imprinting the welder's or welding operator's assigned symbol adjacent to the weld. Welded joints shall be fusion welded unless otherwise required. Changes in direction of piping shall be made with welding fittings only; mitering or notching pipe to form elbows and tees or other similar type construction will not be permitted. Branch connections may be made with either welding tees or branch outlet fittings. Branch outlet fittings shall be forged, flared for improvement of flow where attached to the run, and reinforced against external strains. Beveling, alignment, heat treatment and inspection of weld shall conform to ASME B31.1. Weld defects shall be removed and repairs made to the weld, or the weld joints shall be entirely removed and rewelded. Electrodes shall be stored and dried according to AWS D1.1 or as recommended by the manufacturer. Electrodes that have been wetted or that have lost any of their coating shall not be used.

3.1.1.2 Flanges and Unions

Except where copper tubing is used, union or flanged joints shall be provided in each line immediately preceding the connection to each piece of equipment or material requiring maintenance such as coils, pumps, control valves, and other similar items.

3.1.2 Supports

3.1.2.1 General

Hangers used to support piping 50 mm and larger shall be fabricated to permit adequate adjustment after erection while still supporting the load. Pipe guides and anchors shall be installed to keep pipes in accurate alignment, to direct the expansion movement, and to prevent buckling, swaying, and undue strain. Piping subjected to vertical movement when operating temperatures exceed ambient temperatures shall be supported by variable spring hangers and supports or by constant support hangers.

3.1.2.2 Seismic Requirements (Pipe Supports and Structural Bracing)

Piping and attached valves shall be supported and braced to resist seismic loads as specified under Section 13083 SEISMIC PROTECTION FOR MECHANICAL, ELECTRICAL EQUIPMENT. Structural steel required for reinforcement to properly support piping, headers, and equipment but not shown shall be provided under this section. Material used for support shall be as specified under Section 05210 STEEL JOISTS.

3.1.2.3 Pipe Hangers, Inserts and Supports

Pipe hangers, inserts, and supports shall conform to MSS SP-58 and MSS SP-69, except as modified herein. Types 5, 12, and 26 shall not be used.

a. Hangers: Type 3 shall not be used on insulated piping.

b. Inserts: Type 18 inserts shall be secured to concrete forms before concrete is placed. Continuous inserts which allow more adjustment may be used if they otherwise meet the requirements for Type 18 inserts.

c. C-Clamps: Type 19 and 23 C-clamps shall be torqued per MSS SP-69 and have both locknuts and retaining devices, furnished by the manufacturer. Field-fabricated C-clamp bodies or retaining devices are not acceptable.

d. Angle Attachments: Type 20 attachments used on angles and channels shall be furnished with an added malleable-iron heel plate or adapter.

e. Hangers: Type 24 may be used only on trapeze hanger systems or on fabricated frames.

f. Type 39 saddles shall be used on all insulated pipe 100 mm and larger when the temperature of the medium is above 15.5 degrees C. Type 39 saddles shall be welded to the pipe.

g. Type 40 shields shall:

(1) be used on all insulated pipes less than 100 mm.

(2) be used on all insulated pipes 100 mm and larger when the temperature of the medium is 15.5 degrees C or less.

(3) have a high density insert for pipe 50 mm and larger, and for smaller pipe when the insulation shows signs of being visibly compressed, or when the insulation or jacket shows visible signs of distortion at or near the type 40 shield. High density inserts shall have a density of 144 kg/cubic meter or greater.

h. Horizontal Pipe Supports: Horizontal pipe supports shall be spaced as specified in MSS SP-69 and a support shall be installed not over 300 mm from the pipe fitting joint at each change in direction of the piping. Pipe supports shall be spaced not over 1.5 m apart at valves. Pipe hanger loads suspended from steel joist with hanger loads between panel points in excess of 220 N shall have the excess hanger loads suspended from panel points.

i. Vertical Pipe Supports: Vertical pipe shall be supported at each floor, except at slab-on-grade, and at intervals of not more than 5 m, not more than 2.4 m from end of risers, and at vent terminations.

j. Pipe Guides: Type 35 guides using steel reinforced polytetrafluoroethylene (PTFE) or graphite slides shall be provided where required to allow longitudinal pipe movement. Lateral restraints shall be provided as required. Slide materials shall be suitable for the system operating temperatures, atmospheric conditions, and bearing loads encountered.

k. Steel Slides: Where steel slides do not require provisions for restraint of lateral movement, an alternate guide method may be used. On piping 100 mm and larger with medium 15.5 degrees C or greater, a Type 39 saddle may be welded to the pipe and freely rest on a steel plate. On piping under 100 mm , a Type 40 protection shield may be attached to the pipe or insulation and freely rest on a steel slide plate.

l. High Temperature Guides with Cradles: Where there are high system temperatures and welding to piping is not desirable, the Type 35 guide shall include a pipe cradle, welded to the guide structure and strapped securely to the pipe. The pipe shall be separated from the slide material by at least 100 mm, or by an amount adequate for the insulation, whichever is greater.

m. Insulated Pipe: Insulation on horizontal pipe shall be continuous through hangers for hot and cold piping. Other requirements on insulated pipe are specified in Section 15250 THERMAL INSULATION FOR MECHANICAL SYSTEMS.

3.1.3 Anchors

Anchors shall be provided wherever necessary or indicated to localize expansion or to prevent undue strain on piping. Anchors shall consist of heavy steel collars with lugs and bolts for clamping and attaching anchor

braces, unless otherwise indicated. Anchor braces shall be installed in the most effective manner to secure the desired results using turnbuckles where required. Supports, anchors, or stays shall not be attached where they will injure the structure or adjacent construction during installation or by the weight of expansion of the pipeline.

3.1.4 Pipe Sleeves

Sleeves shall not be installed in structural members except where indicated or approved. Rectangular and square openings shall be as detailed. Each sleeve shall extend through its respective wall, floor, or roof, and shall be cut flush with each surface. Pipes passing through concrete or masonry wall or concrete floors or roofs shall be provided with pipe sleeves fitted into place at the time of construction. Unless otherwise indicated, sleeves shall provide a minimum of 6 mm all-around clearance between bare pipe and sleeves or between jacket over insulation and sleeves. Sleeves in bearing walls, waterproofing membrane floors, and wet areas shall be steel pipe or cast iron pipe. Sleeves in non-bearing walls, floors, or ceilings may be steel pipe, cast iron pipe, galvanized sheet metal with lock-type longitudinal seam and of the metal thickness indicated, or moisture resistant fiber or plastic. Except in pipe chases or interior walls, the annular space between pipe and sleeve or between jacket over insulation and sleeve, in non-fire rated walls, shall be sealed as indicated and specified in Section 07920 JOINT SEALING. Pipes passing through wall waterproofing membrane shall be sleeved as specified above, and a waterproofing clamping flange shall be installed as indicated.

3.1.4.1 Fire Seal

Where pipes pass through firewalls, fire partitions, or floors, a fire seal shall be provided as specified in Section 07270 FIRESTOPPING.

3.1.4.2 Escutcheons

Escutcheons shall be provided at finished surfaces where exposed piping, bare or insulated, passes through floors, walls, or ceilings except in boiler, utility, or equipment rooms. Where sleeves project slightly from floors, special deep-type escutcheons shall be used. Escutcheons shall be secured to pipe or pipe covering.

3.1.5 Condensate Drain Lines

Water seals shall be provided in the condensate drain from all units. The depth of each seal shall be 50 mm plus 0.1 mm for each Pa, of the total static pressure rating of the unit to which the drain is connected. Water seals shall be constructed of 2 tees and an appropriate U-bend with the open end of each tee plugged. Pipe cap or plug cleanouts shall be provided where indicated. Drains indicated to connect to the sanitary waste system shall be connected by an indirect waste fitting. Air conditioner drain lines shall be insulated as specified in Section 15250 THERMAL INSULATION FOR MECHANICAL SYSTEMS.

3.1.6 Pipe-Alignment Guides

Pipe-alignment guides shall be provided where indicated for expansion loops, offsets, and bends and as recommended by the manufacturer for expansion

joints, not to exceed 1.5 m on each side of each expansion joint, and in lines 100 mm or smaller not more than 600 mm on each side of the joint.

3.1.7 Air Vents and Drains

3.1.7.1 Vents

Air vents shall be provided at high points, on water coils, and where indicated to ensure adequate venting of the piping system.

3.1.7.2 Drains

Drains shall be provided at low points and where indicated to ensure complete drainage of the piping. Drains shall be accessible, and shall consist of nipples and caps or plugged tees unless otherwise indicated.

3.1.8 Valves

Isolation gate or ball valves shall be installed on each side of each piece of equipment such as pumps, heaters, heating or cooling coils, and other similar items, at the midpoint of all looped mains, and at any other points indicated or required for draining, isolating, or sectionalizing purposes. Isolation valves may be omitted where balancing cocks are installed to provide both balancing and isolation functions. Each valve except check valves shall be identified. Valves in horizontal lines shall be installed with stems horizontal or above.

3.1.9 Equipment and Installation

Frames and supports shall be provided for tanks, compressors, pumps, valves, air handling units, fans, coils, dampers, and other similar items requiring supports. Air handling units shall be floor mounted or ceiling hung, as indicated. The method of anchoring and fastening shall be as detailed. Floor-mounted equipment, unless otherwise indicated, shall be set on not less than 150 mm concrete pads or curbs doweled in place. Concrete foundations for circulating pumps shall be heavy enough to minimize the intensity of the vibrations transmitted to the piping and the surrounding structure, as recommended in writing by the pump manufacturer. In lieu of a concrete pad foundation, a concrete pedestal block with isolators placed between the pedestal block and the floor may be provided. The concrete foundation or concrete pedestal block shall be of a mass not less than three times the weight of the components to be supported. Lines connected to the pump mounted on pedestal blocks shall be provided with flexible connectors. Foundation drawings, bolt-setting information, and foundation bolts shall be furnished prior to concrete foundation construction for all equipment indicated or required to have concrete foundations. Concrete for foundations shall be as specified in Section 03300 CAST-IN-PLACE STRUCTURAL CONCRETE.

3.1.10 Access Panels

Access panels shall be provided for concealed valves, vents, controls, dampers, and items requiring inspection or maintenance. Access panels shall be of sufficient size and located so that the concealed items may be serviced and maintained or completely removed and replaced. Access panels shall be as specified in Section 05500 MISCELLANEOUS METALS.

3.1.11 Flexible Connectors

Pre-insulated flexible connectors and flexible duct shall be attached to other components in accordance with the latest printed instructions of the manufacturer to ensure a vapor tight joint. Hangers, when required to suspend the connectors, shall be of the type recommended by the connector or duct manufacturer and shall be provided at the intervals recommended.

3.1.12 Sleeved and Framed Openings

Space between the sleeved or framed opening and the duct or the duct insulation shall be packed as specified in Section 07270 FIRESTOPPING for fire rated penetrations. For non-fire rated penetrations, the space shall be packed as specified in Section 07920 JOINT SEALING.

3.1.13 Metal Ductwork

Installation shall be according to SMACNA-06 unless otherwise indicated. Duct supports for sheet metal ductwork shall be according to SMACNA-06, unless otherwise specified. Friction beam clamps indicated in SMACNA-06 shall not be used. Risers on high velocity ducts shall be anchored in the center of the vertical run to allow ends of riser to move due to thermal expansion. Supports on the risers shall allow free vertical movement of the duct. Supports shall be attached only to structural framing members and concrete slabs. Supports shall not be anchored to metal decking unless a means is provided and approved for preventing the anchor from puncturing the metal decking. Where supports are required between structural framing members, suitable intermediate metal framing shall be provided. Where C-clamps are used, retainer clips shall be provided.

3.1.14 Acoustical Duct Lining

Lining shall be applied in cut-to-size pieces attached to the interior of the duct with nonflammable fire resistant adhesive conforming to ASTM C 916, Type I, NFPA 90A, UL 723, and ASTM E 84. Top and bottom pieces shall lap the side pieces and shall be secured with welded pins, adhered clips of metal, nylon, or high impact plastic, and speed washers or welding cup-head pins installed according to SMACNA-06. Welded pins, cup-head pins, or adhered clips shall not distort the duct, burn through, nor mar the finish or the surface of the duct. Pins and washers shall be flush with the surfaces of the duct liner and all breaks and punctures of the duct liner coating shall be sealed with the nonflammable, fire resistant adhesive. Exposed edges of the liner at the duct ends and at other joints where the lining will be subject to erosion shall be coated with a heavy brush coat of the nonflammable, fire resistant adhesive, to prevent delamination of glass fibers. Duct liner may be applied to flat sheet metal prior to forming duct through the sheet metal brake. Lining at the top and bottom surfaces of the duct shall be additionally secured by welded pins or adhered clips as specified for cut-to-size pieces. Other methods indicated in SMACNA-06 to obtain proper installation of duct liners in sheet metal ducts, including adhesives and fasteners, will be acceptable.

3.1.15 Dust Control

To prevent the accumulation of dust, debris and foreign material during construction, temporary dust control protection shall be provided. The distribution system (supply and return) shall be protected with temporary

seal-offs at all inlets and outlets at the end of each day's work. Temporary protection shall remain in place until system is ready for startup.

3.1.16 Insulation

Thickness and application of insulation materials for ductwork, piping, and equipment shall be according to Section 15250 THERMAL INSULATION FOR MECHANICAL SYSTEMS. Outdoor air intake ducts and plenums shall be externally insulated up to the point where the outdoor air reaches the conditioning unit or up to the point where the outdoor air mixes with the outside air stream.

3.1.17 Duct Test Holes

Holes with closures or threaded holes with plugs shall be provided in ducts and plenums as indicated or where necessary for the use of pitot tube in balancing the air system. Extensions, complete with cap or plug, shall be provided where the ducts are insulated.

3.1.18 Power Transmission Components Adjustment

V-belts and sheaves shall be tested for proper alignment and tension prior to operation and after 72 hours of operation at final speed. Belts on drive side shall be uniformly loaded, not bouncing. Alignment of direct driven couplings shall be to within 50 percent of manufacturer's maximum allowable range of misalignment.

3.2 FIELD PAINTING AND PIPING IDENTIFICATION

Finish painting of items only primed at the factory or surfaces not specifically noted otherwise and identification for piping are specified in Section 09900 PAINTING, GENERAL.

3.3 PIPING HYDROSTATIC TEST

After cleaning, water piping shall be hydrostatically tested at a pressure equal to 150 percent of the total system operating pressure for period of time sufficient to inspect every joint in the system and in no case less than 2 hours. Leaks shall be repaired and piping retested until test is successful. No loss of pressure will be allowed. Leaks shall be repaired by re-welding or replacing pipe or fittings. Caulking of joints will not be permitted. Concealed and insulated piping shall be tested in place before covering or concealing.

3.4 DUCTWORK LEAK TEST

Ductwork leak test shall be performed for the entire air distribution system for AHU-9 , including fans, coils, filters, etc. Test procedure, apparatus, and report shall conform to SMACNA-10. The maximum allowable leakage rate is 2 percent. Ductwork leak test shall be completed with satisfactory results prior to applying insulation to ductwork exterior.

3.5 CLEANING AND ADJUSTING

Pipes shall be cleaned free of scale and thoroughly flushed of foreign matter. A temporary bypass shall be provided for water coils to prevent

flushing water from passing through coils. Strainers and valves shall be thoroughly cleaned. Prior to testing and balancing, air shall be removed from water systems by operating the air vents. Temporary measures, such as piping the overflow from vents to a collecting vessel shall be taken to avoid water damage during the venting process. Air vents shall be plugged or capped after the system has been vented. Inside of concealed unit heaters,air terminal units, ducts, plenums, and casing shall be thoroughly cleaned of debris and blown free of small particles of rubbish and dust and then shall be vacuum cleaned before installing outlet faces. Equipment shall be wiped clean, with traces of oil, dust, dirt, or paint spots removed. Temporary filters shall be provided prior to startup of all fans that are operated during construction, and new filters shall be installed after all construction dirt has been removed from the building, and the ducts, plenums, casings, and other items specified have been vacuum cleaned. System shall be maintained in this clean condition until final acceptance. Bearings shall be properly lubricated with oil or grease as recommended by the manufacturer. Belts shall be tightened to proper tension. Control valves and other miscellaneous equipment requiring adjustment shall be adjusted to setting indicated or directed. Fans shall be adjusted to the speed indicated by the manufacturer to meet specified conditions.

3.6 TESTING, ADJUSTING, AND BALANCING

Testing, adjusting, and balancing shall be as specified in Section 15990 TESTING, ADJUSTING AND BALANCING OF HVAC SYSTEMS. Testing, adjusting, and balancing shall begin only when the air supply and distribution, including controls, has been completed, with the exception of performance tests.

3.7 PERFORMANCE TESTS

After testing, adjusting, and balancing has been completed as specified, each system shall be tested as a whole to see that all items perform as integral parts of the system and temperatures and conditions are evenly controlled throughout the building. Corrections and adjustments shall be made as necessary to produce the conditions indicated or specified. Capacity tests and general operating tests shall be conducted by an experienced engineer. Tests shall cover a period of not less than 1 day for each system and shall demonstrate that the entire system is functioning according to the specifications. Coincidental chart recordings shall be made at points indicated on the drawings for the duration of the time period and shall record the temperature at space thermostats or space sensors, the humidity at space humidistats or space sensors and the ambient temperature and humidity in a shaded and weather protected area.

3.8 FIELD TRAINING

The Contractor shall conduct a training course for operating and maintenance personnel as designated by the Contracting Officer. Training shall be provided for a period of 8 hours of normal working time and shall start after the system is functionally complete but prior to the performance tests. The field instruction shall cover all of the items contained in the approved Operating and Maintenance Instructions.

End of Section

SECTION 15950

HEATING, VENTILATING AND AIR CONDITIONING (HVAC) CONTROL SYSTEMS
08/96

PART 1 GENERAL

1.1 REFERENCES

The publications listed below form a part of this specification to the extent referenced. The publications are referred to in the text by basic designation only.

AIR MOVEMENT AND CONTROL ASSOCIATION (AMCA)

AMCA 500	(1989) Test Methods for Louvers, Dampers and Shutters

AMERICAN SOCIETY FOR TESTING AND MATERIALS (ASTM)

ASTM A 269	(1994a) Seamless and Welded Austenitic Stainless Steel Tubing for General Service
ASTM B 88	(1996) Seamless Copper Water Tube
ASTM D 635	(1991) Rate of Burning and/or Extent and Time of Burning of Self-Supporting Plastics in a Horizontal Position
ASTM D 1693	(1994) Environmental Stress-Cracking of Ethylene Plastics

AMERICAN SOCIETY OF MECHANICAL ENGINEERS (ASME)

ASME B40.1	(1991) Gauges - Pressure Indicating Dial Type - Elastic Element
ASME BPV VIII Div 1	(1995; Addenda Dec 1995) Boiler and Pressure Vessel Code; Section VIII, Pressure Vessels Division 1 - Basic Coverage

CODE OF FEDERAL REGULATIONS (CFR)

47 CFR 15	Radio Frequency Devices

INSTITUTE OF ELECTRICAL AND ELECTRONICS ENGINEERS (IEEE)

IEEE C62.41	(1991) Surge Voltages in Low-Voltage AC Power Circuits

INTERNATIONAL SOCIETY FOR MEASUREMENT AND CONTROL (ISA)

ISA S7.3	(1975; R 1981) Quality Standard for Instrument Air

NATIONAL ELECTRICAL MANUFACTURERS ASSOCIATION (NEMA)

NEMA 250	(1991) Enclosures for Electrical Equipment (1000 Volts Maximum)

NATIONAL FIRE PROTECTION ASSOCIATION (NFPA)

NFPA 70	(1996) National Electrical Code
NFPA 90A	(1993) Installation of Air Conditioning and Ventilating Systems

UNDERWRITERS LABORATORIES (UL)

UL 94	(1996) Tests for Flammability of Plastic Materials for Parts in Devices and Appliances
UL 268A	(1993; Rev Apr 1994) Smoke Detectors for Duct Application
UL 508	(1993) Industrial Control Equipment
UL 916	(1994; Rev thru May 1996) Energy Management Equipment

1.2 GENERAL REQUIREMENTS

1.2.1 Verification of Dimensions

The Contractor shall become familiar with all details of the work, shall verify all dimensions in the field, and shall advise the Contracting Officer of any discrepancy before performing any work.

1.2.2 Drawings

Because of the small scale of the drawings, it is not possible to indicate all offsets, fittings, and accessories that may be required. The Contractor shall investigate the mechanical, electrical, and finish conditions that could affect the work to be performed, shall arrange such work accordingly, and shall furnish all work necessary to meet such conditions.

1.3 SUBMITTALS

Government approval is required for submittals with a "GA" designation; submittals having an "FIO" designation are for information only. The following shall be submitted in accordance with Section 01300 SUBMITTAL PROCEDURES:

SD-01 Data

Equipment Compliance Booklet; GA.

An HVAC control system equipment compliance booklet (ECB) in indexed booklet form with numbered tabs separating the information on each device. It shall consist of, but not be limited to, data sheets and catalog cuts which document compliance of all devices and components with the specifications. The ECB shall be indexed in alphabetical order by the unique identifiers.

Devices and components which do not have unique identifiers shall follow the devices and components with unique identifiers and shall be indexed in alphabetical order according to their functional name. The ECB shall include a bill of materials for each HVAC control system. The bill of materials shall function as the table of contents for the ECB and shall include the device's unique identifier, device function, manufacturer, model/part/catalog number used for ordering, and tab number where the device information is located in the ECB.

SD-04 Drawings

HVAC Control System; GA.

Drawings on A1 841 by 594 mm sheets in the form and arrangement shown. The drawings shall use the same abbreviations, symbols, nomenclature and device identifiers shown. Each control-system element on a drawing shall have a unique identifier as shown. All HVAC control system drawings shall be delivered together as a complete submittal. Drawings shall be submitted for each HVAC system.

a. HVAC control system drawings shall include the following:

Sheet One: Drawing index, HVAC control system legend.

Sheet Two: Valve schedule, damper schedule.

Sheet Three: Compressed air station schematic.

Sheet Four: HVAC control system schematic and equipment schedule.

Sheet Five: HVAC control system sequence of operation and ladder diagram.

Sheet Six: HVAC control panel arrangement, control panel cross-section, and control panel inner door layout.

Sheet Seven: HVAC control panel back-panel layout.

Sheet Eight: Control loop wiring diagrams.

Sheet Nine: Motor starter and relay wiring diagram.

Note: Repeat sheets four through nine for each AHU system.

b. An HVAC control system drawing index showing the name and number of the building, military site, State or other similar designation, and Country. The drawing index shall list all HVAC control system drawings, including the drawing number, sheet number, drawing title, and computer filename when used.

c. An HVAC control system legend showing generic symbols and the name of devices shown on the HVAC control system drawings.

d. A valve schedule showing each valve's unique identifier, size, flow coefficient (Cv), pressure drop at specified flow rate, spring range, positive positioner range, actuator size, close-off pressure data, dimensions, and access and clearance requirements data.

e. A damper schedule showing each damper and actuator's identifier, nominal and actual sizes, orientation of axis and frame, direction of blade rotation, spring ranges, operation rate, positive positioner ranges, locations of actuators and damper end switches, arrangement of sections in multi-section dampers, and methods of connecting dampers, actuators, and linkages. The damper schedule shall include the maximum leakage rate at the operating static-pressure differential. The damper schedule shall contain actuator selection data supported by calculations of the torque required to move and seal the dampers, access and clearance requirements.

f. A compressed-air station schematic diagram showing all equipment, including: compressor with motor horsepower and voltage; starter; isolators; manual bypasses; tubing sizes; drain piping and drain traps; reducing valves; dryer; and data on manufacturer's names and model numbers, mounting, access, and clearance requirements. Air compressor and air dryer data shall include calculations of the air consumption of current-to-pneumatic transducers and any other control system devices to be connected to the compressed air station, and the compressed air supply dewpoint temperature at 140 kPa.

g. An HVAC control system equipment schedule showing the control loop, device unique identifier, device function, setpoint, input range, and additional important parameters (i.e. output range).

h. An HVAC control system sequence of operation.

I. An HVAC control system ladder diagram showing all relays, contacts, pilot lights, switches, fuses and starters connected to the control system.

j. HVAC control panel arrangement drawings showing both side and front views of the panel. The drawing shall show panel and mounting dimensions.

k. HVAC control panel cross-section drawings showing mounting rails and standoffs for devices.

l. HVAC control panel inner door layout drawings showing both front and rear views of the inner door. The drawings shall show device locations, labels, nameplate legends, and fabrication details.

m. HVAC control panel back-panel layout drawings showing device locations, labels, nameplate legends, terminal block layout, fabrication details, and enclosure operating temperature-rise calculations.

n. HVAC control system wiring diagrams showing functional wiring diagrams of the interconnection of conductors and cables to HVAC control panel terminal blocks and to the identified terminals of devices, starters and package equipment. The wiring diagrams shall show all necessary jumpers and ground connections. The wiring diagrams shall show the labels of all conductors. Sources of power required for HVAC control systems and for packaged-equipment control systems shall be identified back to the panel-board circuit breaker number, HVAC system control panel, magnetic starter, or

packaged equipment control circuit. Each power supply and transformer not integral to a controller, starter, or packaged equipment shall be shown. The connected volt-ampere load and the power supply volt-ampere rating shall be shown.

SD-08 Statements

Commissioning Procedures; FIO .

a. Six copies of the HVAC control system commissioning procedures, in indexed booklet form, 60 days prior to the scheduled start of commissioning. Commissioning procedures shall be provided for each HVAC control system, and for each type of terminal-unit control system. The commissioning procedures shall reflect the format and language of this specification, and refer to devices by their unique identifiers as shown. The commissioning procedures shall be specific for each HVAC system, and shall give detailed step-by-step procedures for commissioning of the system.

b. Commissioning procedures documenting detailed, product-specific set-up procedures, configuration procedures, adjustment procedures, and calibration procedures for each device. Where the detailed product-specific commissioning procedures are included in manufacturer supplied manuals, reference may be made in the HVAC control system commissioning procedures to the manuals.

c. Commissioning procedures documenting controller configuration checksheets for each controller listing all configuration parameters, dip switch and jumper settings, and initial recommended P, I and D values. The configuration parameters shall be listed in the order in which they appear during the configuration process. Each configuration parameter shall be noted as being: set per specs with no field adjustment required, set per specs but field adjustable, or not applicable.

d. Commissioning procedures showing a time clock configuration checksheet listing all parameters, and switch settings. The parameters shall be listed in the order which they appear during the setup process.

e. An HVAC control system commissioning procedures equipment list that lists the equipment to be used to accomplish commissioning. The list shall include manufacturer name, model number, equipment function, the date of the latest calibration, and the results of the latest calibration.

Performance Verification Test Procedures; FIO.

Six copies of the HVAC control system performance verification test procedures, in indexed booklet form, 60 days before the Contractor's scheduled test dates. The performance verification test procedures shall refer to the devices by their unique identifiers as shown, shall explain, step-by-step, the actions and expected results that will demonstrate that the HVAC control system performs in accordance with the sequences of operation. An HVAC control system performance verification test equipment list shall be included that lists the equipment to be used during performance verification testing. The list shall include manufacturer name,

model number, equipment function, the date of the latest calibration, and the results of the latest calibration.

Training Course Materials; FIO.

Six copies of HVAC control system training course material 30 days prior to the scheduled start of the training course. The training course material shall include the operation manual, maintenance and repair manual, and paper copies of overheads used in the course. An HVAC control system training course, in outline form, with a proposed time schedule. Approval of the planned training schedule shall be obtained from the Government at least 60 days prior to the start of the training.

SD-09 Reports

Commissioning Report; FIO.

Six copies of the HVAC control system commissioning report, in indexed booklet form, within 30 days after completion of the system commissioning. The commissioning report shall include data collected during the HVAC control system commissioning and shall follow the format of the commissioning procedures. The commissioning report shall include all controller and time clock checksheets with final values listed for all parameters, setpoints, P, I, D setting constants, calibration data for all devices, and results of adjustments.

Performance Verification Test Report; FIO.

Six copies of the HVAC control system performance verification test report, in indexed booklet form, within 30 days after completion of the test. The HVAC control system performance verification test report shall include data collected during the HVAC control system performance verification test. The original copies of data gathered during the performance verification test shall be turned over to the Government after Government approval of the test results.

SD-13 Certificates

ASME Air-Storage Tank Certificate; FIO.

An ASME Air-Storage Tank Certificate for each storage tank.

SD-18 Records

Service Organizations; FIO.

Six copies of a list of service organizations qualified to service the HVAC control system. The list shall include the service organization name, address, technical point of contact and telephone number, and contractual point of contact and telephone number.

SD-19 Operation and Maintenance Manuals

Operation Manual; FIO.

Maintenance and Repair Manual; FIO.

Six copies of the HVAC control system operation manual and HVAC control system maintenance and repair manual for each HVAC control system 30 days before the date scheduled for the training course.

1.4 DELIVERY AND STORAGE

Products shall be stored with protection from the weather, humidity and temperature variations, dirt and dust, and other contaminants, within the storage-condition limits published by the equipment manufacturer. Dampers shall be stored so that seal integrity, blade alignment and frame alignment are maintained.

1.5 OPERATION MANUAL

An HVAC control system operation manual for each HVAC control system, in indexed booklet form, shall be provided. The operation manual shall include the HVAC control system sequence of operation, and procedures for the HVAC system start-up, operation and shut-down. The operation manual shall include as-built HVAC control system detail drawings. The operation manual shall include the as-built controller configuration checksheets, the as-built time clock configuration checksheet, the HVAC control system front panel description, the procedures for changing HVAC system controller setpoints, the procedures for gaining manual control of processes, the time clock manufacturer's manual control of processes, the time clock manufacturer's operation manual, and the controller manufacturer's operation manual.

a. The HVAC control system front panel description shall explain the meaning and use of the lights, switches, gauges, and controller displays located in the front panel. Each light, switch, gauge, and display described shall be numbered and referenced to a drawing of the front panel.

b. The procedures for changing HVAC system controller setpoints shall describe the step-by-step procedures required to change: the process variable setpoints of controllers, the alarm setpoints of controllers, the controller bias settings, and controller setpoint reset schedules.

c. The procedures for gaining manual control of processes shall describe step-by-step procedures required to gain manual control of devices and manually adjust their positions.

1.6 MAINTENANCE AND REPAIR MANUAL

An HVAC control system maintenance and repair manual for each HVAC control system, in indexed booklet form in hardback binders, shall be provided. The maintenance and repair manual shall include the routine maintenance checklist, a recommended repair methods list, a list of recommended maintenance and repair tools, the qualified service organization list, the as-built commissioning procedures and report, the as-built performance verification test procedures and report, and the as-built equipment data booklet (EDB).

a. The routine maintenance checklist shall be arranged in a columnar format. The first column shall list all devices listed in the equipment compliance booklet (ECB), the second column shall state

the maintenance activity or state no maintenance required, the third column shall state the frequency of the maintenance activity, and the fourth column for additional comments or reference.

b. The recommended repair methods list shall be arranged in a columnar format and shall list all devices in the equipment compliance booklet (ECB) and state the guidance on recommended repair methods, either field repair, factory repair, or whole-item replacement.

c. The as-built equipment data booklet (EDB) shall include the equipment compliance booklet (ECB) and all manufacturer supplied user manuals and information.

d. If the operation manual and the maintenance and repair manual are provided in a common volume, they shall be clearly differentiated and separately indexed.

PART 2 PRODUCTS

2.1 MATERIAL AND EQUIPMENT

Material and equipment shall be standard products of a manufacturer regularly engaged in the manufacturing of such products which are of a similar material, design and workmanship. The standard products shall have been in satisfactory commercial or industrial use for 2 years prior to bid opening. The 2-year use shall include applications of equipment and materials under similar circumstances and of similar size. The 2 years experience must be satisfactorily completed by a product which has been sold or is offered for sale on the commercial market through advertisements, manufacturers' catalogs, or brochures. Products having less than a 2-year field service record will be acceptable if a certified record of satisfactory field operation, for not less than 6000 hours exclusive of the manufacturer's factory tests, can be shown. The equipment items shall be supported by a service organization. The Contractor shall submit a certified list of qualified permanent service organizations and qualifications. These service organizations shall be reasonably convenient to the equipment on a regular and emergency basis during the warranty period.

2.2 GENERAL EQUIPMENT REQUIREMENTS

2.2.1 Electrical and Electronic Devices

All electrical, electronic, and electro-pneumatic devices not located within an HVAC control panel shall have a NEMA Type 1 enclosure in accordance with NEMA 250 unless otherwise shown.

2.2.2 Standard Signals

The output of all analog transmitters and the analog input and output of all single-loop controllers and function modules shall be 4-to-20 mAdc signals. The signal shall originate from current-sourcing devices and shall be received by current-sinking devices.

2.2.3 Ambient Temperature Limits

Ambient Temperature Actuators and positive positioners, and transmitters shall operate within temperature limit ratings of 5 to 60 degrees C. All panel-mounted instruments shall operate within limit ratings of 2 to 50 degrees C and 10 percent to 95 percent relative humidity, noncondensing. All devices installed outdoors shall operate within limit ratings of minus 40 to plus 65 degrees C.

2.2.4 Nameplates, Lens Caps, and Tag Nameplates

Nameplates, lens caps, and lens caps bearing legends as shown and tags bearing device-unique identifiers as shown shall have engraved or stamped characters. A plastic or metal tag shall be mechanically attached directly to each device or attached by a metal chain or wire. Each air flow measurement station shall have a tag showing flow rate range for signal output range, duct size, and identifier as shown.

2.3 MATERIALS

2.3.1 Tubing

2.3.1.1 Copper

Copper tubing shall conform to ASTM B 88 and shall have sweat fittings and valves.

2.3.1.2 Plastic

Plastic tubing shall have barbed fittings and valves. Plastic tubing shall have the burning characteristics of linear low-density polyethylene tubing, shall be self-extinguishing when tested in accordance with ASTM D 635, shall have UL 94 V-2 flammability classification, and shall withstand stress cracking when tested in accordance with ASTM D 1693. Plastic-tubing bundles shall be provided with Mylar barrier and flame-retardant polyethylene jacket.

2.3.1.3 Stainless Steel

Stainless steel tubing shall conform to ASTM A 269, and shall have stainless steel compression fittings.

2.3.2 Wiring

2.3.2.1 Terminal Blocks

Terminal blocks shall be insulated, modular, feed-through, clamp style with recessed captive screw-type clamping mechanism, shall be suitable for rail mounting, and shall have end plates and partition plates for separation or shall have enclosed sides.

2.3.2.2 Control Wiring for 24-Volt Circuits

Control wiring for 24-volt circuits shall be 18 AWG minimum, stranded copper and shall be rated for 300-volt service.

2.3.2.3 Wiring for 120-Volt Circuits

Wiring for 120-volt circuits shall be 18 AWG minimum, stranded copper and shall be rated for 600-volt service.

2.3.2.4 Analog Signal Wiring Circuits

Analog signal wiring circuits within control panels shall not be less than 20 AWG and shall be rated for 300-volt service.

2.3.2.5 Instrumentation Cable

Instrumentation cable shall be 18 AWG, stranded copper, single or multiple-twisted, minimum 51 mm lay of twist, 100 percent shielded pairs, and shall have a 300-volt insulation. Each pair shall have a 20 AWG tinned-copper drain wire and individual overall pair insulation. Cables shall have an overall aluminum-polyester or tinned-copper cable-shield tape, overall 20 AWG tinned-copper cable drain wire, and overall cable insulation.

2.3.2.6 Nonconducting Wiring Duct

Nonconducting wiring duct in control panels shall have wiring duct in control panels shall have slotted sides, snap-on duct covers, have slotted sides, snap-on duct covers, fittings for connecting ducts, mounting clips for securing ducts, and wire-retaining clips.

2.3.2.7 Transformers

Step-down transformers shall be utilized where control equipment operates at lower than line circuit voltage. Transformers, other than transformers in bridge circuits, shall have primaries wound for the voltage available and secondaries wound for the correct control circuit voltage. Transformers shall be sized so that the connected load is 80 percent of the rated capacity or less. Transformers shall conform to UL 508.

2.4 ACTUATORS

Actuators shall be pneumatic, electric or electronic as shown and shall be provided with mounting and connecting hardware. Actuators shall fail to their spring-return positions on signal or power failure ,except that variable air volume (VAV) terminal unit actuators may be of the floating type. The actuator stroke shall be limited in the direction of power stroke by an adjustable stop. Actuators shall have a visible position indicator. Actuators shall smoothly open or close the devices to which they are applied and shall have a full stroke response time of 60 seconds or less. Electric or electronic actuators operating in series shall have an auxiliary actuator driver. Pneumatic actuators shall be rated for 172 kPa operating pressure except for high-pressure cylinder-type actuators. Electric actuators shall have an oil-immersed gear train. Electric actuators used in a sequencing application shall have zero and span adjustments.

2.4.1 Valve Actuators

Valve actuators shall be selected to provide a minimum of 125 percent of the motive power necessary to operate the valve over its full range of operation.

2.4.2 Positive Positioners

Positive positioners are required for pneumatic actuators. Each positive positioner shall be a pneumatic relay with a mechanical feedback mechanism and an adjustable operating range and starting point.

2.5 AUTOMATIC CONTROL VALVES

2.5.1 Valve Assembly

Valves shall have stainless-steel stems and stuffing boxes with extended necks to clear the piping insulation. Unless otherwise stated, valves shall have globe style bodies. Valve bodies shall be designed for not less than 862 kPa working pressure or 150 percent of the system operating pressure, whichever is greater. Valve leakage rating shall be 0.01 percent of rated Cv.

2.5.2 Butterfly-Valve Assembly

Butterfly valves shall be threaded lug type suitable for dead-end service, and for modulation to the fully-closed position, with carbon-steel bodies and noncorrosive discs, stainless steel shafts supported by bearings, and EPDM seats suitable for temperatures from minus 29 to plus 120 degrees C. Valves shall have a manual means of operation independent of the actuator. The rated Cv for butterfly valves shall be the valve Cv at 70% open (60 degrees open).

2.5.3 Two-Way Valves

Two-way modulating valves shall have equal-percentage characteristics.

2.5.4 Three-Way Valves

Three-way valves shall provide linear flow control with constant total flow throughout full plug travel.

2.5.5 Duct-Coil and Terminal-Unit-Coil Valves

Control valves with either flare-type or solder-type ends shall be provided for duct or terminal-unit coils. Flare nuts shall be furnished for each flare-type end valve.

2.5.6 Valves for Chilled-Water Service

Bodies for valves 40 mm and smaller shall be brass or bronze, with threaded or union ends. Bodies for valves from 50 to 80 mm inclusive shall be of brass, bronze or iron. Bodies for 50 mm valves shall have threaded ends. Bodies for valves from 65 to 80 mm shall have flanged-end connections. Valve Cv shall be within 100 percent to 125 percent of the Cv shown. Internal valve trim shall be brass or bronze except that valve stems may be type 316 stainless steel. Valves 100 mm and larger shall be butterfly valves.

2.5.7 Valves for Hot-Water Service

Valves for hot-water service below 121 degrees C shall be as follows: Bodies for valves 40 mm and smaller shall be brass or bronze, with threaded

or union ends. Bodies for 50 mm valves shall have threaded ends. Bodies for valves from 50 to 80 mm inclusive shall be of brass, bronze, or iron. Bodies for valves 100 mm and larger shall be iron. Bodies for valves 65 mm and larger shall be provided with flanged-end connections. Valve Cv shall be within 100 percent to 125 percent of the Cv shown. Internal trim (including seats, seat rings, modulating plugs, and springs) of valves controlling water hotter than 99 degrees C shall be Type 316 stainless steel. Internal trim for valves controlling water 99 degrees C or less shall be brass or bronze. Nonmetallic parts of hot-water control valves shall be suitable for a minimum continuous operating temperature of 121 degrees C or 10 degrees C above the system design temperature, whichever is higher. Valves 100 mm and larger shall be butterfly valves.

2.6 DAMPERS

2.6.1 Damper Assembly

A single damper section shall have blades no longer than 1.2 m and shall be no higher than 1.8 m. Maximum damper blade width shall be 203 mm. Larger sizes shall be made from a combination of sections. Dampers shall be steel, or other materials where shown. Flat blades shall be made rigid by folding the edges. All blade-operating linkages shall be within the frame so that blade-connecting devices within the same damper section will not be located directly in the air stream. Damper axles shall be 13 mm (minimum) plated steel rods supported in the damper frame by stainless steel or bronze bearings. Blades mounted vertically shall be supported by thrust bearings. Pressure drop through dampers shall not exceed 10 Pa at 5 m/s in the wide-open position. Frames shall not be less than 50 mm in width. Dampers shall be tested in accordance with AMCA 500.

2.6.1.1 Operating Links

Operating links external to dampers (such as crankarms, connecting rods, and line shafting for transmitting motion from damper actuators to dampers) shall withstand a load equal to at least twice the maximum required damper-operating force. Rod lengths shall be adjustable. Links shall be brass, bronze, zinc-coated steel, or stainless steel. Working parts of joints and clevises shall be brass, bronze, or stainless steel. Adjustments of crankarms shall control the open and closed positions of dampers.

2.6.1.2 Damper Types

Dampers shall be parallel blade type.

2.6.2 Outside-Air, Return-Air, and Relief-Air Dampers

The dampers shall be provided where shown. Blades shall have interlocking edges and shall be provided with compressible seals at points of contact. The channel frames of the dampers shall be provided with jamb seals to minimize air leakage. Dampers shall not leak in excess of 102 L/s per square meter at 1,000 Pa static pressure when closed. Seals shall be suitable for an operating temperature range of minus 40 to plus 93 degrees C. Dampers shall be rated at not less than 10 m/s air velocity.

2.6.3 Mechanical and Electrical Space Ventilation Dampers

The dampers shall be as shown. Dampers shall not leak in excess of 406 L/s per square meter at 1,000 Pa (gauge) static pressure when closed. Dampers shall be rated at not less than 7.8 m/s air velocity.

2.6.4 Damper End Switches

Each end switch shall be a hermetically-sealed switch with a trip lever and over-travel mechanism. The switch enclosure shall be suitable for mounting on the duct exterior and shall permit setting the position of the trip lever that actuates the switch. The trip lever shall be aligned with the damper blade.

2.7 DUCT SMOKE DETECTORS

Install duct smoke detectors as specified under Specification Section 16721 FIRE DETECTION AND ALARM SYSTEM. ~~Duct smoke detectors shall conform to the requirements of UL 268A. Duct smoke detectors shall have perforated sampling tubes extended into the air duct. Detector circuitry shall be mounted in a metallic enclosure exterior to the duct. Detectors shall have manual reset. Detectors shall be rated for air velocities that include air flows between 2.5 and 20 m/s. Detectors shall be powered from the HVAC control panel. Detectors shall have two sets of normally open alarm contacts and two sets of normally closed alarm contacts. Detectors shall be connected to the building fire alarm panel for alarm initiation. A remote annunciation lamp and accessible remote reset switch shall be provided for duct detectors that are mounted eight feet or more above the finished floor and for detectors that are not readily visible. Remote lamps and switches as well as each affected fan unit shall be properly identified in etched rigid plastic placards. In addition, detector shall have integral indicating LED>~~

2.8 INSTRUMENTATION

2.8.1 Measurements

Transmitters shall be factory calibrated to provide an output of 4 to 20 mAdc over the indicated ranges:

a. Conditioned space temperature, from 10 to 30 degrees C.

b. Duct temperature, from 5 to 60 degrees C except that return-air temperature for economizer operation shall be minus 35 to plus 55 degrees C.

c. Chilled-water temperature, from minus 1 to plus 38 degrees C.

d. Heating hot-water temperature, from 38 to 121 degrees C.

e. Outside-air temperature, from minus 35 to plus 55 degrees C.

f. Relative humidity, 0 to 100 percent for space and duct high-limit applications.

g. Differential pressure for VAV supply-duct static pressure from 0 to 500 Pa (gauge).

h. Electronic air-flow measurement station and transmitter, from 0.6 to 13 m/s.

2.8.2 Temperature Instruments

2.8.2.1 Resistance Temperature Detectors (RTD)

Temperature sensors shall be 100 ohms 3- or 4-wire RTD. Each RTD shall be platinum with a tolerance of plus or minus 0.1 percent at 0 degrees C, and shall be encapsulated in epoxy, series 300 stainless steel, anodized aluminum, or copper. Each RTD shall be furnished with an RTD transmitter as specified, integrally-mounted unless otherwise shown.

2.8.2.2 Continuous-Averaging RTD

Continuous-averaging RTDs shall have a tolerance of plus or minus 0.5 degree C at the reference temperature, and shall be of sufficient length to ensure that the resistance represents an average over the cross-section in which it is installed. The sensing element shall have a bendable copper sheath. Each averaging RTD shall be furnished with an RTD transmitter as specified, to match the resistance range of the averaging RTD.

2.8.2.3 Low Limit RTD

Low limit RTD's shall have a tolerance of plus or minus 0.5 degree C at the reference temperature and shall be provided in sufficient quantities to ensure coverage of entire coil. RTD shall respond to lowest average temperature of any 300 mm section. The sensing element shall have a bendable copper sheath. Each low limit RTD shall be furnished with an RTD transmitter as specified, to match the range of the RTD.

2.8.2.4 RTD Transmitter

The RTD transmitter shall accept a 3-wire 100 ohm RTD input. The transmitter shall be a 2-wire, loop-powered device. The transmitter shall produce a linear 4-to-20 mAdc output corresponding to the required temperature measurement. The output error shall not exceed 0.1 percent of the calibrated span. The transmitter shall include offset and span adjustments.

2.8.3 Relative-Humidity Instruments

A relative-humidity instrument for indoor application shall have a measurement range from 0 to 100 percent relative-humidity and be rated for operation at ambient air temperatures within the range of minus 4 to plus 55 degrees C. It shall be capable of being exposed to a condensing air stream (100 percent RH) with no adverse effect to the sensor's calibration or other harm to the instrument. The instrument shall be of the wall-mounted or duct-mounted type, as required by the application, and shall be provided with any required accessories. Instruments used in duct high-limit applications shall have a bulk polymer resistive sensing element. Duct-mounted instruments shall be provided with a duct probe designed to protect the sensing element from dust accumulation and mechanical damage. The instrument (sensing element and transmitter) shall be a 2-wire, loop-powered

device and shall have an accuracy of plus or minus 3 percent of full scale within the range of 20 to 80 percent relative humidity. The instrument shall have a typical long-term stability of 1 percent or less drift per year. The transmitter shall convert the sensing element's output to a linear 4-20 mAdc output signal in proportion to the measured relative-humidity value. The transmitter shall include offset and span adjustments.

2.8.4 Electronic Air-Flow-Measurement Stations and Transmitters

2.8.4.1 Stations

Each station shall consist of an array of velocity sensing elements and an air-flow straightener. Air-flow straighteners shall be contained in a flanged sheet-metal or aluminum casing. The velocity sensing elements shall be of the RTD or thermistor type, producing a linear output. The sensing elements shall be distributed across the duct cross-section in the quantity and pattern specified by the published installation instructions of the station manufacturer. The resistance to airflow through the air-flow measurement station shall not exceed 20.0 Pa at an air-flow of 10 m/s. Station construction shall be suitable for operation at air-flows of up to 25.3 m/s over a temperature range of 4.4 to 49 degrees C, and accuracy shall be plus or minus 3 percent over a range of 0.6 to 13 m/s. In outside-air measurement or in low-temperature air delivery applications, the station shall be certified by the manufacturer to be accurate as specified over a temperature range of minus 30 to plus 50 degrees C. In outside-air measurement applications, the air-flow straightener shall be constructed of 3.175 mm aluminum honeycomb and the depth of the straightener shall not be less than 40 mm.

2.8.4.2 Transmitters

Each transmitter shall produce a linear, temperature compensated 4-to-20 mAdc output corresponding to the required velocity measurement. The output error of the transmitter shall not exceed 0.5 percent of the calibrated measurement. Each transmitter shall have offset and span adjustments.

2.8.5 Differential Pressure Instruments

The instrument shall be a pressure transmitter with an integral sensing element. The instrument over pressure rating shall be 300 percent of the operating pressure. The sensor/transmitter assembly accuracy shall be plus or minus 2 percent of full scale. The transmitter shall be a 2-wire, loop-powered device. The transmitter shall produce a linear 4-to-20 mAdc output corresponding to the required pressure measurement. Each transmitter shall have offset and span adjustments.

2.8.6 Thermowells

Thermowells shall be Series 300 stainless steel with threaded brass plug and chain, 50 mm lagging neck and extension-type well, and inside diameter and insertion length as required for the application.

2.8.7 Sunshields

Sunshields for outside-air temperature sensing elements shall prevent the sun from directly striking the temperature sensing elements. The sunshields shall be provided with adequate ventilation so that the sensing element

responds to the ambient temperature of the surroundings. The top of each sunshield shall have a galvanized-metal rainshield projecting over the face of the sunshield. The sunshields shall be painted white or shall be unpainted aluminum.

2.9 THERMOSTATS

Thermostat ranges shall be selected so that the setpoint is adjustable without tools between plus or minus 5 degrees C of the setpoint shown. Thermostats shall be electronic or electric.

2.9.1 Nonmodulating Room Thermostats

Contacts shall be single-pole double-throw (SPDT), hermetically sealed, and wired to identified terminals. Maximum differential shall be 2.75 degrees C. Room thermostats shall be enclosed with separate locking covers (guards). Thermostats shall have manual switches as required by the application.

2.9.2 Modulating Room Thermostats

Modulating room thermostats shall have either one output signal, two output signals operating in unison, or two output signals operating in sequence, as required for the application. Each thermostat shall have an adjustable throttling range of 2 to 4 degrees C for each output. Room thermostats shall be enclosed with separate locking covers (guards). Room thermostats shall have temperature display.

2.9.3 Nonmodulating Capillary Thermostats and Aquastats

Each thermostat shall have a capillary length of at least 1.5 meters,, shall have adjustable direct-reading scales for both setpoint and differential, and shall have a differential adjustable from 3 to 9 degrees C. 6 to 16 degrees F. Aquastats shall be of the strap-on type, with 5 degrees C 10 degrees F fixed differential.

2.9.4 Low-Temperature-Protection Thermostats

Low-temperature-protection thermostats shall be, low-temperature safety thermostats, with NO and NC contacts and manual reset, with an element length of 6 meters, which shall respond to the coldest 460 mm segment.

2.9.5 Fan-Coil Unit Room Thermostats

2.9.5.1 Heating Thermostats

Fan-coil heating thermostats shall be provided with fixed heat anticipation and shall have a single-pole, single-throw (SPST) switch hermetically sealed and actuated by a bimetallic or bellows type element. Thermostats shall be provided with external temperature setting devices with a factory set maximum of 22 20 degrees C. Heating thermostats shall have an adjustable range of at least 7 degrees below 22 20 degrees C.

2.10 PRESSURE SWITCHES AND SOLENOID VALVES

2.10.1 Pressure Switches

Each switch shall have an adjustable setpoint with visible setpoint scale. Range shall be as shown. Differential adjustment shall span 20 to 40 percent of the range of the device.

2.10.2 Differential-Pressure Switches

Each switch shall be an adjustable diaphragm-operated device with two SPDT contacts, with taps for sensing lines to be connected to duct pressure fittings designed to sense air pressure. These fittings shall be of the angled-tip type with tips pointing into the air stream. The setpoint shall not be in the upper or lower quarters of the range and the range shall not be more than three times the setpoint. Differential shall be a maximum of 35 Pa at the low end of the range and 85 Pa at the high end of the range.

2.10.3 Pneumatic Electric (PE) Switches

Each switch shall have an adjustable setpoint range of 20 to 140 kPa with a switching differential adjustable from 15 to 35 kPa. The switch action shall be SPDT.

2.10.4 Solenoid-Operated Pneumatic (EP) Valves

Each valve shall have three-port operation: common, normally open, and normally closed. Each valve shall have an outer cast-aluminum body and internal parts of brass, bronze, or stainless steel. The air connection shall be a 10 mm NPT threaded connection. Valves shall be rated for 345 kPa when used in a control system that operates at 172 kPa or less, or 1035 kPa when used in a control system that operates in the range of 172 to 690 kPa.

2.11 INDICATING DEVICES

2.11.1 Thermometers

2.11.1.1 Piping System Thermometers

Piping system thermometers shall have brass, malleable iron or aluminum alloy case and frame, clear protective face, permanently stabilized glass tube with indicating-fluid column, white face, black numbers, and a 230 mm scale. Thermometers for piping systems shall have rigid stems with straight, angular, or inclined pattern.

2.11.1.2 Piping System Thermometer Stems

Thermometer stems shall have expansion heads as required to prevent breakage at extreme temperatures. On rigid-stem thermometers, the space between bulb and stem shall be filled with a heat-transfer medium.

2.11.1.3 Non-Averaging Air-Duct Thermometers

Air-duct thermometers shall have perforated stem guards and 45-degree adjustable duct flanges with locking mechanism.

2.11.1.4 Averaging Air-Duct Thermometers

Averaging thermometers shall have a 90 mm (nominal) dial, with black legend on white background, and pointer traveling through a 270-degree arc.

2.11.1.5 Accuracy

Thermometers shall have an accuracy of plus or minus 1 percent of scale range. Thermometers shall have a range suitable for the application.

2.11.2 Pressure Gauges

Gauges shall be 50 mm (nominal) size, back connected, suitable for field or panel mounting as required, shall have black legend on white background, and shall have a pointer traveling through a 270-degree arc. Accuracy shall be plus or minus 3 percent of scale range. Gauges shall meet requirements of ASME B40.1.

2.11.2.1 Pneumatic Actuator Gauges

Field mounted gauges for indicating signal input to pneumatic actuators shall have a scale of 0 to 200 kPa with 10 kPa graduations.

2.11.2.2 Air Storage Tank, Filter, and Dryer Gauges

Gauges for air storage tanks, or for use before and after dryers or dirt and oil filters, shall have a scale of 0 to 1100 kPa with 20 kPa graduations.

2.11.2.3 Hydronic-System Gauges

Gauges for hydronic-system applications shall have ranges and graduations as shown.

2.11.2.4 Control Panel Pressure Gauges

Panel mounted air pressure gauges shall have a scale of 0 to 200 kPa with 10 kPa graduations.

2.11.3 Low Differential Pressure Gauges

Gauges for low differential-pressure measurements shall be a minimum of 90 mm (nominal) size with two sets of pressure taps, and shall have a diaphragm-actuated pointer, white dial with black figures, and pointer zero adjustment. Gauges shall have ranges and graduations as shown. Accuracy shall be plus or minus 2 percent of scale range.

2.12 SINGLE-LOOP CONTROLLERS

2.12.1 Controller Features

The controller shall be a microprocessor-based single-loop device that does not require Contractor generated software. The controller shall be mountable in a panel cutout measuring 92 by 92 mm. The controller shall have field scalable process variable, a remote setpoint analog input and an analog output with adjustable high and low end limits and proportional control manual reset adjustment. The analog output shall result from proportional, integral and derivative (PID) control. The analog output

shall be configurable as direct acting and reverse acting. The controller shall have keyboard, display, auto/manual selection for control of its analog output, remote setpoint adjustment/local setpoint adjustment selection with adjustable high-end and low-end limits, ratio and bias adjustments on remote setpoint input, operator-initiated self-tune/manual-tune selection, anti-reset wind-up feature, and 2 independent SPDT contact-closure outputs (PV alarm and deviation alarm). The controller shall be configurable to power-up in automatic with local setpoint control and in automatic with remote setpoint control. The range of hysteresis adjustment shall be not smaller than from 1 percent to 5 percent of process variable input span. The controller shall power the analog output loop to 20 milliamperes when connected to a load of 600 ohms. The controller shall be capable of retransmitting the process variable to 20 milliamperes when connected to 600 ohms. The controller shall have 5-year battery backup to store operating parameters or shall have nonvolatile memory.

2.12.2 Parameter Input and Display

Control parameters shall be entered and displayed directly, in the correct engineering units, through a series of keystrokes on a front-panel display with a 3-1/2 digit, 7-segment display, with decimal point and polarity indication. The use of this display shall allow manual interrogation of setpoint, mode constants, and values of the process variable and output.

2.12.3 Controller Electrical Requirements

Each controller shall be powered by 120 volts ac. Power consumption shall not be greater than 25 watts. Each controller shall provide electrical noise isolation between the ac power line and the process variable input, remote setpoint input, and output signals and of not less than 100 db at 60 Hz common-mode rejection ratio, and not less than 60 db at 60 Hz normal-mode rejection ratio.

2.12.4 Controller Accuracy

The controller shall have an accuracy of plus or minus 0.30 percent of input span, plus or minus 1 digit.

2.12.5 Self-Tuning

The controller self-tuning operation shall apply proportional, integral, and derivative modes of control and shall modify the mode constants as required. Self-tuning shall only be in operation when selected from the front panel.

2.12.6 Manual-Tuning

The controller manual-tuning operation shall provide proportional, integral, and derivative control modes, or any combination thereof, by means of individual mode constant adjustments. These adjustments shall be set for the appropriate value if a particular control mode action is desired, or to zero if that particular mode is not desired. The proportional-mode constant shall be adjustable from 0 to 200 percent of input signal range, the integral-mode constant shall be adjustable from 0 to 20 repeats per minute, and derivative-mode constant shall be adjustable from 0 to 5 minutes.

2.13 CONTROL DEVICES AND ACCESSORIES

Control device and accessory input impedance shall not exceed 250 ohms.

2.13.1 Function Modules

Function modules shall accept mAdc analog input signals to produce mAdc analog output signals or contact output signals. Modules shall have zero and span adjustments for analog outputs, and setpoint adjustments for contact outputs. Module output span accuracy shall be plus or minus 1 percent of input span. Modules shall be rail-mounted as shown. Power consumption shall be not greater than 5 watts.

2.13.1.1 Minimum-Position Switch and Temperature-Setpoint Device

Minimum-position switch and temperature-setpoint device shall accept a 1000 ohms potentiometer input and shall produce a steady analog output. In temperature setpoint applications the potentiometer shall be single-turn, suitable for wall mounting, enclosed in a locking metal or heavy duty plastic enclosure and shall have a graduated dial corresponding to the range of the setpoint adjustment. In a minimum position switch application the potentiometer shall be mounted on or internal to the minimum position switch. The device shall have its input signal electrically or optically isolated from output. Mounting socket shall be an 8 pin base with pins 1, 2, 3 ac power input, 4, 5, 6 input signal, 7, 8, output signal.

2.13.1.2 Signal-Inverter Modules

Signal inverter shall accept an analog input signal and shall have sufficient output capacity to drive the output signal through a circuit with an impedance of not less than 600 ohms. The output shall be electrically isolated from the input and the device shall have a moisture resistant coating. Mounting socket shall be an 8 pin base with pins 1, 2, 3 ac power input, 4, 5, 6 input signal, 7, 8, output signal.

2.13.1.3 High-Low Signal Selector

High-low signal-selector modules shall accept analog input signals and select either the highest or the lowest input signal as the output signal. The signal selector shall be powered by 120 Vac and the output signal shall be electrically isolated from the input signal.

2.13.1.4 Sequencer Modules (Dual Limit Alarm)

Sequencer modules (dual limit alarms) shall accept an analog input signal and shall provide two contact closure outputs. Each output shall have an adjustable independent contact setpoint with an adjustable switching differential range between 1 percent and 100 percent of the input span. The setpoint shall be adjustable between 0 percent and 100 percent of the input span. Setpoint and switching differential (deadband) adjustment potentiometers shall be internal, top-accessed potentiometers or screws. Sequencers shall return all contacts to their zero input signal condition when power is interrupted. The device shall have moisture resistant coating.

2.13.1.5 Loop Driver Modules

Loop driver module shall accept an analog input signal and shall have a circuit input impedance not greater than 100 ohms. The loop driver module shall have sufficient output capacity to drive the output signal through a circuit with an impedance range of not less than 1000 ohms. The output shall be electrically isolated from the input and the device shall have moisture resistant coating. Mounting socket shall be an 8 pin base with pins 1, 2, 3 ac power input, 4, 5, 6 input signal, 7, 8 output signal.

2.13.2 Relays

Relays shall be 2-pole, double-throw (2PDT) with a 10-ampere resistive rating at 120 Vac, and shall have an enclosed 120-Vac coil with 8 pin blade connectors, and a matching rail-mounted socket. Power consumption shall not be greater than 3 watts.

2.13.3 Time-Delay Relays

Time delay relays shall be 2PDT with 8 pin connectors, dust cover, and a matching rail-mounted socket. Adjustable timing range shall be 0 to 5 minutes. Power consumption shall be not greater than 3 watts.

2.13.4 Time Clocks

Each time clock shall be a 365-day programmable timing device with 4 independently timed circuits. Each clock shall have a manual scheduling keypad and an alphanumeric display of all timing parameters. Timing parameters shall include: date in Gregorian calendar for month, day and day-of-month indication; and 24-hour time-of-day display, with one-minute resolution for programming the ON and OFF times for each circuit. Each clock shall allow programming of each circuit for 12 holiday periods for either ON or OFF events for any selected duration of the 365-day program. Each clock shall have capacity for programming 4 ON events and 4 OFF events per day for each circuit. The programmed events shall be assignable to a 365-day schedule. Each clock shall have automatic Standard Time and Daylight Saving Time adjustment, by input of the appropriate dates. Each time clock shall have automatic leap year correction. Each clock shall be provided with 4-day battery backup. Power consumption shall not be greater than 10 watts.

2.13.5 Current-to-Pneumatic (IP) Transducers

The transducers shall be 2-wire current-to-pressure transmitters that convert a 4-to-20 mAdc input signal to a 21 to 103 kPa, or a 103 to 21 kPa, pneumatic output, with a conversion accuracy of plus or minus 2 percent of full scale, including linearity and hysteresis. Input impedance shall not exceed 250 ohms. Air consumption shall not be greater than 0.12 L/s.

2.13.6 Direct Current (DC) Power Supply

One DC power supply shall be used to power all transmitters connected to the control panel. The power supply shall be 24 Vdc at not less than 1.2 amperes, with a peak-to-peak ripple not to exceed 0.03 percent of output voltage. Each power supply shall have a fused input, and shall be protected from voltage surges and powerline transients. The power supply output shall be protected against overvoltage and short circuits.

2.13.7 Power Line Conditioner (PLC)

PLCs shall be furnished for each controller panel. The PLCs shall provide both voltage regulation and noise rejection. The PLCs shall be of the ferro-resonant design, with no moving parts and no tap switching, while electrically isolating the secondary from the power line side. The PLCs shall be sized for 125 percent of the actual connected kva load. Characteristics of the PLC shall be as follows:

a. At 85 percent load, the output voltage shall not deviate by more than plus or minus 1 percent of nominal voltage when the input voltage fluctuates between minus 20 percent to plus 10 percent of nominal voltage.

b. During load changes of zero to full load, the output voltage shall not deviate by more than plus or minus 3 percent of nominal voltage. Full correction of load switching disturbances shall be accomplished within 5 cycles, and 95 percent correction shall be accomplished within 2 cycles of the onset of the disturbance.

c. Total harmonic distortion shall not exceed 3-1/2 percent at full load.

2.14 PILOT LIGHTS AND MANUAL SWITCHES

Pilot lights and switches shall be rectangular devices arranged in a horizontal matrix as shown. Momentary switches shall be non-illuminated. Interlocking switches shall have separately illuminated sections. Split legend lights shall have separately illuminated sections. Device illumination shall be by light-emitting diode or neon lamp.

2.15 HVAC SYSTEM CONTROL PANELS

2.15.1 Panel Assembly

The control panel shall be factory assembled and shipped to the job site as a single unit. The panel shall be fabricated as shown, and the devices shall be mounted as shown. Each panel shall be fabricated as a bottom-entry connection point for control-system electric power, control-system main air source, control-system wiring, pneumatic tubing, interconnection of control systems, interconnection of starters and external shutdown devices, and energy monitoring and control systems (EMCS) interface. Each panel shall have an operating temperature rise of not greater than 11 degrees C above an ambient temperature of 38 degrees C.

2.15.2 Panel Electrical Requirements

Each control panel shall be powered by nominal 120 volts ac, fused at 5 amps, terminating at the panel on terminal blocks. Instrument cases shall be grounded. Interior panel, interior door, and exterior panel enclosure shall be grounded.

2.15.3 Enclosure

The enclosure for each panel shall be a NEMA 12 single-door wall-mounted box conforming to NEMA 250, with continuous hinged and gasketed exterior door

with print pocket and key lock, continuous hinged interior door, interior back panel, and ventilation louvers in back surface as shown. Inside finish shall be white enamel, and outside finish shall be gray primer over phosphatized surfaces.

2.15.4 Mounting and Labeling

Controllers, pilot lights, switches, IP's, and pressure gauge shall be mounted on the interior door as shown. Power conditioner, fuses and duplex outlet shall be mounted on the interior of the cabinet as shown. All other components housed in the panel shall be mounted on the interior back panel surface of the enclosure, behind the door on rails as shown. Controllers and gauges mounted on the front of the inner door shall be identified by a plastic or metal nameplate as shown that is mechanically attached to the panel. Function modules, relays, timeclocks, IP transducers, DC power supply, and other devices interior to the panel shall be identified by a plastic or metal nameplate that is mechanically attached to the panel. The nameplate shall have the inscription as shown. Lettering shall be cut or stamped into the nameplate to a depth of not less than 0.4 mm, and shall show a contrasting color, produced by filling with enamel or lacquer or by the use of a laminated material. Painting of lettering directly on the surface of the interior door or panel is not permitted.

2.15.5 Wiring and Tubing

2.15.5.1 Current-to-Pneumatic Transducers (IP)

Current-to-pneumatic transducers (IP) shall be piped to bulkhead fittings in the bottom of the panel with a 50 mm loop to accommodate IP replacement and shall be wired to identified terminal blocks.

2.15.5.2 Panel Wiring

Interconnections Wiring shall be installed in wiring ducts in such a way that devices can be added or replaced without disturbing wiring that is not affected by the change. Wiring to all devices shall have a 100 mm wiring loop in the horizontal wiring duct at each wiring connection. There shall be no wiring splices within the control panel. All interconnections required for power or signals shall be made on device terminals or panel terminal blocks, with not more than two wires connected to a terminal.

2.15.5.3 Panel Terminal Blocks

Terminal blocks shall be arranged in groups as shown. Instrument signal grounds at the same ground reference level shall end at a grounding terminal for connection to a common ground point. Wiring-shield grounds at the same reference level shall end at a grounding terminal for connection to a common ground point. Grounding terminal blocks shall be identified by reference level.

2.15.5.4 Wiring Identification

All wiring connected to controllers, time clocks and function modules shall be identified by function and polarity with full word identifiers, i.e., process variable input, remote setpoint input and control output.

2.15.6 EMCS Terminal Blocks

Terminal blocks shall be provided for connections to EMCS as shown. Analog signals shall require only the removal of jumpers to interface to EMCS.

2.16 COMPRESSED-AIR STATIONS

2.16.1 Air-Compressor Assembly

The air compressor shall be a high-pressure compressing unit with electric motor. The compressor shall be equipped with a motor with totally enclosed belt guard, an operating-pressure switch, safety-relief valves, gauges, intake filter and intake silencer, and combination type magnetic starter with undervoltage protection and thermal-overload protection for each phase, and shall be supported by a steel base mounted on an air storage tank. The air compressor shall provide the compressed air required for control operation while operating not more than one-third of the time. The air storage tank shall be fabricated for a working pressure of not less than 1380 kPa, and constructed and certified in accordance with ASME BPV VIII Div 1. The tank shall be of sufficient volume so that no more than six compressor starts per hour are required with the starting pressure switch differential set at 140 kPa. The tank shall be provided with an automatic condensate drain trap with manual override feature. A second (duplex arrangement) compressor of capacity equal to the primary compressor shall be provided, with interlocked control to provide automatic changeover upon malfunction or failure of either compressor. A manual selector switch shall be provided to index the lead compressor including the automatic changeover.

2.16.2 Compressed-Air Station Specialties

2.16.2.1 Refrigerated Dryer, Filters and, Pressure Regulator

A refrigerated dryer shall be provided in the air outlet line of the air storage tank. The dryer shall be of the size required for the full delivery capacity of the compressor. The air shall be dried at a pressure of not less than 483 kPa to a temperature not greater than 2 degrees C. The dryer shall be provided with an automatic condensate drain trap with manual override feature. The refrigerant used in the dryer shall be one of the fluorocarbon gases and have an Ozone Depletion Potential of not more than 0.05. A 5 micron prefilter and coalescing-type 0.03 micron oil removal filter with shut-off valves shall be provided in the dryer discharge. Each filter bowl shall be rated for 1034 kPa maximum working pressure. A pressure regulator, with high side and low side pressure gauges, and a safety valve shall be provided downstream of the filter. Pressure regulators of the relieving type shall not be used.

2.16.2.2 Flexible Pipe Connections

The flexible pipe connectors shall be designed for 1034 kPa and 121 degrees C service, and shall be constructed of rubber, tetrafluoroethylene resin, or braided corrosion-resistant steel, bronze, monel, or galvanized steel. The connectors shall be suitable for the service intended and may have threaded or soldered ends. The length of the connectors shall be as recommended by the manufacturer for the service intended.

2.16.2.3 Vibration-Isolation Units

The vibration-isolation units shall be standard products with published loading ratings, and shall be single rubber-in-shear, double rubber-in-shear, or spring type.

2.16.2.4 Compressed Air Piping

Control air delivered to the system shall conform to ISA S7.3. Air lines for pneumatic controls shall be seamless copper tubing or nonmetallic tubing. Copper tubing shall be hard-drawn in exposed areas and either hard-drawn or annealed in concealed areas. Only tool-made bands shall be used. Fittings for copper tubing shall be brass or copper solder joint type except at connections to apparatus, where fittings shall be brass compression type. Nonmetallic tubing shall be compounded from polyethylene, meeting the stress crack test of ASTM D 1693. Nonmetallic individual tube polyethylene or multitube instrument tubing bundle shall be classified as flame retardant under UL 94. The polyethylene material shall be rated as self-extinguishing when tested in accordance with ASTM D 635. Air lines concealed in walls shall be hard-drawn copper tubing or nonmetallic tubing in rigid conduit. Terminal single lines shall be hard-drawn copper tubing, except when the run is less than 300 mm in length, flexible polyethylene may be used. Nonmetallic tubing will not be used for applications where the tubing could be subjected to a temperature exceeding 55 degrees C. Fittings for nonmetallic tubing shall be for instrument service and may be brass or acetal resin of the compression or barbed push-on type.

2.17 ELECTRONIC VARIABLE AIR VOLUME (VAV) TERMINAL UNIT CONTROLS

2.17.1 VAV Terminal Units

The VAV terminal units shall be as specified in Section 15895 AIR SUPPLY, DISTRIBUTION, VENTILATION, AND EXHAUST SYSTEM.

2.17.2 Terminal-Unit Controls

2.17.2.1 Box Control Device

Controls for pressure independent boxes shall consist of a velocity-sensing device in the primary air entering the box, a room temperature sensing element with occupant setpoint adjustment and digital temperature readout, a damper actuator, and an adjustable microprocessor-based VAV box controller. Each controller shall operate a damper for cooling and heating and a duct coil for heating. Terminal unit controls shall meet the requirements of UL 916 and 47 CFR 15.

2.17.2.2 Communication and Programming Device

One hand-held communication and programming device with instruction manual, plus one additional hand-held communicating device and instruction manual per 100 terminal units, shall be provided. The communication and programming device shall connect to the controller directly or to a jack at the room-temperature-sensing element location. The communication and programming device shall be used to read and set minimum velocity, maximum velocity, heating setpoint, and cooling setpoint, and to read velocity and space temperature.

PART 3 EXECUTION

3.1 GENERAL INSTALLATION CRITERIA

The HVAC control system shall be installed and ready for operation, as specified and shown. Dielectric isolation shall be provided where dissimilar metals are used for connection and support. Penetrations through and mounting holes in the building exterior shall be made watertight. The HVAC control system installation shall provide clearance for control system maintenance by maintaining access space between coils, access space to mixed-air plenums, and other access space required to calibrate, remove, repair, or replace control system devices. The control system installation shall not interfere with the clearance requirements for mechanical installation shall not interfere with the clearance requirements for mechanical and electrical system maintenance.

3.1.1 Device Mounting Criteria

Devices mounted in or on piping or ductwork, on building surfaces, in mechanical/electrical spaces, or in occupied space ceilings shall be installed in accordance with manufacturer's recommendations and as shown. Control devices to be installed in piping and ductwork shall be provided with all required gaskets, flanges, thermal compounds, insulation, piping, fittings, and manual valves for shutoff, equalization, purging, and calibration. Strap-on temperature sensing elements shall not be used except as specified.

3.1.2 Wiring Criteria

Wiring external to control panels, including low-voltage wiring, shall be installed in metallic raceways. Nonmetallic-sheathed cables or metallic-armored cables may be installed in areas permitted by NFPA 70. Wiring shall be installed without splices between control devices and HVAC control panels. Cables and conductors shall be tagged at both ends, with the identifier shown on the shop drawings, in accordance with the requirements of Section 16415 ELECTRICAL WORK, INTERIOR. Other electrical work shall be as specified in Section 16415 ELECTRICAL WORK, INTERIOR and as shown.

3.1.2.1 Power-Line Surge Protection

Equipment connected to ac circuits shall be protected from powerline surges. Equipment protection shall meet the requirements of IEEE C62.41. Fuses shall not be used for surge protection.

3.1.2.2 Surge Protection for Transmitter and Control Wiring

HVAC system control panel equipment shall be protected against surges induced on control and transmitter wiring installed outside and as shown. The equipment protection shall be tested in the normal mode and in the common mode, using the following two waveforms:

a. A 10-microsecond by 1000-microsecond waveform with a peak voltage of 1500 volts and a peak current of 60 amperes.

b. An 8-microsecond by 20-microsecond waveform with a peak voltage of 1000 volts and a peak current of 500 amperes.

3.1.2.3 Controller Output Loop Impedance Limitation

Controller output loops shall be constructed so that total circuit impedance connected to the analog output of a single-loop controller shall not exceed 600 ohms.

3.2 CONTROL SYSTEM INSTALLATION

3.2.1 Damper Actuators

Actuators shall not be mounted in the air stream. Multiple actuators operating a common damper shall be connected to a common drive shaft. Actuators shall be installed so that their action shall seal the damper to the extent required to maintain leakage at or below the specified rate and shall move the blades smoothly.

3.2.2 Local Gauges for Actuators

Pneumatic actuators shall have an accessible and visible receiver gauge installed in the tubing lines at the actuator as shown.

3.2.3 Room-Instrument Mounting

Room instruments shall be mounted so that their sensing elements are 1.5 m above the finished floor unless otherwise shown. Temperature setpoint device shall be recess mounted.

3.2.4 Smoke Detectors

Duct smoke detectors shall be provided in supply and return air ducts in accordance with NFPA 90A.

3.2.5 Manual Emergency Fan Shutdown Switches

Manual emergency fan shutdown switches shall be provided for air distribution fans in accordance with NFPA 90A. Switches shall be the manual-reset type. Switches shall be located and mounted in an accessible manner, approximately 1.2 m above the finished floor. Switches shall be properly identified in etched rigid plastic placards.

3.2.6 Low-Temperature-Protection Thermostats

For each 1.8 square meters of coil-face area, or fraction thereof, a thermostat shall be provided to sense the temperature at the location shown. The thermostat sensing element shall be installed in a serpentine pattern.

3.2.7 Averaging-Temperature Sensing Elements

Sensing elements shall have a total-element minimum length equal to 3.3 linear meter per square meter of duct cross-sectional area.

3.2.8 Foundations and Housekeeping Pads

Foundations and housekeeping pads shall be provided for the HVAC control system air compressors.

3.2.9 Compressed-Air Stations

The air-compressor assembly shall be mounted on vibration eliminators, in accordance with ASME BPV VIII Div 1 for tank clearance. The air line shall be connected to the tank with a flexible pipe connector. Compressed-air-station specialties shall be installed with all required tubing, including condensate tubing to a floor drain.

3.2.10 Duct Static-Pressure Sensing Elements and Transmitters

The duct static-pressure sensing element and transmitter sensing point shall be located at 75% to 100% of the distance between the first and last air terminal units.

3.2.11 Indication Devices Installed in Piping and Liquid Systems

Gauges in piping systems subject to pulsation shall have snubbers. Gauges for steam service shall have pigtail fittings with cock. Thermometers and temperature sensing elements installed in liquid systems shall be installed in thermowells.

3.2.12 Control System Tubing

The control system shall be installed so that pneumatic lines are not exposed to outside-air temperatures. Air lines shall be concealed except in mechanical rooms and other areas where other tubing and piping is exposed. All tubes and tube bundles exposed to view shall be installed neatly in lines parallel to the lines of the building. Tubing between panels and actuators in mechanical/electrical spaces shall be routed so that the lines are easily traceable. Air lines shall be tested periodically for leaks during installation. Air lines shall be purged of dirt, impurities and moisture before connecting to the control equipment. Air lines shall be number coded or color coded and keyed to the submittal drawings for future identification and servicing the control system.

3.2.12.1 Pneumatic Lines In Mechanical/Electrical Spaces

In mechanical/electrical spaces, pneumatic lines shall be plastic tubing or copper tubing. Horizontal and vertical runs of plastic tubes or soft copper tubes shall be installed in raceways dedicated to tubing. The dedicated raceways shall be supported every 1.8 m for horizontal runs and every 2.4 m for vertical runs. Tubing not installed in raceways shall be hard-drawn copper tubing with sweat fittings and valves, supported every 1.8 m for horizontal runs and every 2.4 m for vertical runs.

3.2.12.2 Pneumatic Lines External To Mechanical/Electrical Spaces

Tubing external to mechanical/electrical spaces, when run in plenum ceilings, shall be soft copper with sweat fittings, supported every 2.4 m. Tubing not in plenum spaces shall be soft copper with sweat fittings supported every 2.4 m or shall be plastic tubing in raceways dedicated to tubing.

3.2.12.3 Connection to Liquid Lines

Tubing for connection of sensing elements and transmitters to liquid lines shall be copper with brass compression fittings.

3.2.12.4 Connection to Ductwork

Tubing for connection of sensing elements and transmitters to ductwork shall be plastic tubing.

3.2.12.5 Tubing in Concrete

Tubing in concrete shall be installed in rigid conduit. Tubing in walls containing insulation, fill, or other packing materials shall be installed in raceways dedicated to tubing.

3.2.12.6 Final Connection to Actuators

Final connections to actuators shall be plastic tubing 300 mm long and unsupported at the actuator.

3.2.12.7 Connection to HVAC Control Panel

A manual valve shall be provided at each HVAC control panel to allow shutoff of main air. Pneumatic connections to HVAC control panels shall be made at bulkhead fittings. Final connections to HVAC control panel bulkhead fitting shall be exposed tubing approximately 300 mm long.

3.3 COMMISSIONING PROCEDURES

3.3.1 General Procedures

3.3.1.1 Evaluations

The Contractor shall make the observations, adjustments, calibrations, measurements, and tests of the control systems, tune the controllers, set the timeclock schedule, and make any necessary control-system corrections to ensure that the systems function as described in paragraph CONTROL SEQUENCES OF OPERATION. The Contractor shall permanently record, on system equipment schedule, the final setting of controller proportional, integral and derivative constant settings, setpoint, manual reset setting, maximum and minimum controller output, and ratio and bias settings, in units and terminology specific to the controller.

3.3.1.2 Item Check

An item-by-item check of the sequence of operation requirement shall be performed using Steps 1 through 4 in the specified control system commissioning procedures. Steps 1, 2, and 3 shall be performed with the HVAC system shutdown; Step 4 shall be performed after the HVAC systems have been started. Signals used to change the mode of operation shall originate from the actual HVAC control device intended for the purpose, such as the time clock. External input signals to the HVAC control panel (such as EMCS, starter auxiliary contacts, and external systems) may be simulated in Steps 1, 2, and 3. With each operational-mode change signal, pilot lights and HVAC-panel output-relay contacts shall be observed to ensure that they function. All terminals assigned to EMCS shall be checked and observed to ensure that the proper signals are available.

3.3.1.3 Weather-Dependent Test Procedures

Weather-dependent test procedures that cannot be performed by simulation shall be performed in the appropriate climatic season. When simulation is used, the Contractor shall verify the actual results in the appropriate season.

3.3.1.4 Configuration

The Contractor shall configure each controller for its specified service.

3.3.1.5 Two-Point Accuracy Check

A two-point accuracy check of the calibration of each HVAC-control-system sensing element and transmitter shall be performed by comparing the HVAC-control-panel readout to the actual value of the variable measured at the sensing element and transmitter or airflow measurement station location. Digital indicating test instruments shall be used, such as digital thermometers, motor-driven psychrometers, and tachometers. The test instruments shall be at least twice as accurate as the specified sensing element-to-controller readout accuracy. The calibration of the test instruments shall be traceable to NIST standards. The first check point shall be with the HVAC system in the shutdown condition, and the second check point shall be with the HVAC system in an operational condition. Calibration checks shall verify that the sensing element-to-controller readout accuracies at two points are within the specified product accuracy tolerances. If not, the device shall be recalibrated or replaced and the calibration check repeated.

3.3.1.6 Insertion, Immersion Temperature

Insertion-temperature and immersion-temperature sensing element and transmitter-to-controller readout calibration accuracy shall be checked at one physical location along the axis of the sensing element.

3.3.1.7 Averaging Temperature

Averaging-temperature sensing element and transmitter-to-controller readout calibration accuracy shall be checked every 1/2 meter along the axis of the sensing element in the proximity of the sensing element, for a maximum of 10 readings. These readings shall then be averaged.

3.3.1.8 Controller Stations

The Contractor shall use the controllers' MANUAL/AUTOMATIC stations as the means of manipulating control devices, such as dampers and valves, to check IP operation and to effect stable conditions prior to making measurement checks.

3.3.1.9 Controller-Tuning Procedure

The Contractor shall perform a controller-tuning procedure, which shall consist of setting the initial proportional, integral, and derivative (PID) mode constants, controller setpoints, and logging the settings. Tuning shall be self-tuning operation by the controller unless manual tuning is necessary.

3.3.1.10 Controller Manual-Tuning Procedure

Where required, the controller manual-tuning procedure shall be performed in three steps. Using a constant-temperature-setpoint controller as an example, these steps are:

a. Step A:

(1) The controller MANUAL/AUTO station shall be indexed to the AUTO position and the integral- and derivative-mode constants set to zero.

(2) The proportional-mode constant shall be set to an initial setting of 8 percent. (This corresponds to 18.6 kPa per degree C or 3.6 ma per degree C proportional controller output change for a 55.5 degree C transmitter span.) This causes the controller output signal to vary from live zero output to full output for an input signal change representing an 4.5 degree C change.

(3) Controllers for other variables, such as relative humidity and static pressure, shall have their proportional-mode constants set initially in a similar manner for an achievable output range proportional to the transmitter span.

b. Step B:

(1) The controller temperature setpoint shall be set at any achievable temperature. The controller output and transmitter input shall be observed.

(2) If the transmitter input continuously oscillates above and below the setpoint without settling at a fixed value, or if such oscillation increases, the proportional-mode constant is too small.

(3) If the proportional-mode constant is too small, increase it in steps until the transmitter input indicates stable control at any temperature, provided that the controller output is not at either extreme of the output range.

(4) If the temperature control point slowly drifts toward or away from the controller setpoint, the proportional-mode constant is too large. Its setting shall be decreased in steps until oscillations occur as described in the preceding paragraphs, and then the setting shall be increased until stable control occurs.

(5) A step change in controller setpoint shall be introduced. This should cause the controller to overshoot the setpoint slightly, with each subsequent overshoot peak value decreasing by a factor of 2/3 until stable control is achieved at, above, or below the setpoint.

(6) Next, the integral-mode constant setting shall be increased in small steps, and setpoint changes shall be introduced until control point and controller setpoint coincide at stable control. This should happen consistently after a setpoint change within a short time, such as 5 to 10 minutes.

c. Step C:

(1) Unless the HVAC process variable changes rapidly, the derivative-mode constant setting can remain at zero.

(2) If derivative control is needed, the derivative-mode constant shall be gradually increased.

(3) Step changes in controller setpoint shall be introduced, and the derivative-mode constant setting adjusted until stable control is achieved.

3.3.1.11 Setting the Controller

After the controller manual-tuning procedure is complete, the controller shall be set at the setpoint as shown.

3.3.2 Unit Heater

The "OFF/AUTO" switch shall be placed in the "OFF" position. Each space-thermostat temperature setting shall be turned up so that it makes contact to turn on the unit-heater fans. The unit-heater fans shall not start. The "OFF/AUTO" switch shall be placed in the "AUTO" position. The unit-heater fans shall start. Each space-thermostat temperature setting shall be turned down, and the unit-heater fans shall stop. The thermostats shall be set at their temperature setpoints as shown. The results of testing of one of each type of unit shall be logged.

3.3.3 Single Building Hydronic-Heating with Hot Water Boiler

Steps for installation shall be as follows:

a. Step 1 - System Inspection: The HVAC system shall be observed in its shutdown condition. It shall be verified that power and main air are available at the HVAC system control panel.

b. Step 2 - Calibration Accuracy Check with HVAC System Shutdown: Readings shall be taken with a digital thermometer at each temperature-sensing element location. Each controller display shall be read, and the thermometer and controller-display readings logged. The calibration accuracy of the sensing element-to-controller readout for outside-air temperature and system-supply temperature shall be checked.

c. Step 3 - Actuator Range Adjustments: A signal shall be applied to the actuator using the controller "MANUAL/AUTO" station in "MANUAL." The proper operation of the actuators and positioners for all valves shall be verified visually. The signal shall be varied from live zero of 4 ma or 21 kPa to 20 ma or 103 kPa , and it shall be verified that the actuators travel from zero stroke to full stroke within the signal range. It shall be verified that all sequenced actuators move from zero stroke to full stroke in the proper direction, and move the connected device in the proper direction from one extreme position to the other. Example: NC actuators are closed at 4 ma or 21 kPa and are open at 20 ma or 103 kPa . The signal levels that move the controlled device to its extreme positions shall be logged.

d. Step 4 - Control-System Commissioning:

(1) The outside-air temperature controller "MANUAL/AUTO" station shall be indexed to the "MANUAL" position and the two-point calibration sensing element-to-controller readout accuracy check for the outside-air temperature performed. The controller proportional band adjustment, the setpoint, the manual reset, and the maximum controller output shall be set to achieve the outside-air temperature schedule as shown.

(2) A signal shall be applied to simulate that the outside-air temperature is above the setpoint as shown. It shall be verified that pumps HHWP-1, HHWP-2 and BCP-1 and boiler B-1 stop. A signal shall be applied to simulate that the outside-air temperature is below the setpoint as shown. It shall be verified that pumps HHWP-1, HHWP-2 and BCP-1 start and boiler B-1 operates.

(3) The system's supply-temperature controller "MANUAL/AUTO" station shall be indexed to the "MANUAL" position, and the two-point calibration accuracy check of the sensing element-to-controller readout for the system-supply temperature performed. The controller shall be placed in the remote-setpoint mode. The remote setpoint for temperature schedule shall be set as shown. The controller "MANUAL/AUTO" station shall be indexed to the "AUTO" position, and the controller setup and tuning procedures performed. The controller shall be set at a system-supply temperature setpoint within the schedule as shown and the mode-constant setpoints logged. Signals of 8 ma and 16 ma shall be sent to the remote setpoint from the outside-air temperature controller, to verify that the controller setpoint changes to the appropriate values. The outside-air temperature controller's "MANUAL/AUTO" station shall be indexed to "AUTO."

(4) An occupied-mode signal shall be applied. Each space-temperature controller "MANUAL/AUTO" station shall be indexed to "MANUAL." The calibration accuracy check of sensing element-to-controller readout for each space temperature shall be performed, and the values logged. The controller shall be placed in the remote-setpoint mode. The setpoint low-end limit shall be set to 19 degrees C and the high-end limit shall be set to 22 degrees C. The proper action of the temperature-setpoint device at the space-temperature sensing element and transmitter location shall be verified. Each controller "MANUAL/AUTO" station shall be indexed to the "AUTO" position and the controller-tuning procedure performed. An unoccupied-mode signal shall be applied and it shall be verified that each controller's setpoint changes to the unoccupied-mode setting. The temperature setpoint device shall be set to the space-temperature setpoint as shown.

3.3.4 Variable-Air-Volume, Without Return Fan

Steps for installation shall be as follows:

a. Step 1 - System Inspection: The HVAC system shall be observed in its shutdown condition. Power and main air shall be available at the HVAC system control panel. The outside-air and relief-air

dampers shall be closed, the return-air damper open, and the supply-fan inlet vanes and cooling-coil valve shall be closed.

b. Step 2 - Calibration Accuracy Check with HVAC System in Shutdown: Readings shall be taken with a digital thermometer at each temperature-sensing element location. Each controller display shall be read, and the thermometer and controller-display readings logged. The calibration accuracy of the sensing element-to-controller readout for outside-air, return-air, mixed-air, and the cooling-coil discharge air temperatures shall be checked.

c. Step 3 - Actuator Range Adjustments: A signal shall be applied to the actuator, using the controller "MANUAL/AUTO" station in "MANUAL." The proper operation of the actuators and positioners for all dampers and valves shall be verified. The signal shall be varied from live zero of 4 ma or 21 kPa to 20 ma or 103 kPa , and it shall be verified that the actuators travel from zero stroke to full stroke within the signal range. It shall be verified that all sequenced and parallel-operated actuators move from zero stroke to full stroke in the proper direction, and move the connected device in the proper direction from one extreme position to the other.

d. Step 4 - Control-System Commissioning:

(1) With the fan ready to start, the ventilation-delay-mode signal shall be applied, and it shall be verified that the ventilation-delay mode pilot light turns on. The occupied-mode signal shall be applied, and it shall be verified that the occupied-mode pilot light turns on and that supply fan starts. It shall be verified that the outside-air and relief-air dampers are closed, the return-air damper is open, and the cooling-coil valve and inlet vanes are under control, by slightly changing the controller output. The ventilation-delay-mode signal shall be released, and it shall be verified that the ventilation-delay-mode pilot light turns off and that the outside-air, return-air, and relief-air dampers come under control, by changing the controller output.

(2) The minimum-outside-air-mode signal shall be applied. It shall be verified that the outside-air damper opens to minimum position and that the economizer pilot light is off.

(3) With supply fan running, a high static-pressure input signal shall be simulated at the device, by pressure input to the differential-pressure switch sensing device. HVAC system shutdown shall be observed. It shall be verified that the high-static-pressure pilot light turns on, and that contact output at the EMCS terminals is made. The differential-pressure switch shall be set at the setpoint as shown. The HVAC system shall be restarted by manual restart, and it shall be verified that the high-static-pressure pilot light turns off.

(4) The supply-fan static-pressure controller "MANUAL/AUTO" station shall be indexed to the "MANUAL" position, and the two-point calibration accuracy check for sensing element-to-controller readout shall be performed. The controller shall be placed in the local setpoint mode. The controller "MANUAL/AUTO" station shall be indexed to the "AUTO" position, and the controller-tuning procedure

performed. The controller shall be set at the static-pressure setpoint as shown, and the mode-constants logged.

(5) The mixed-air temperature controller "MANUAL/AUTO" station shall be indexed to the "MANUAL" position. An economizer-mode input signal shall be simulated and it shall be verified that the economizer-mode pilot light turns on. The mixed-air temperature controller output shall be changed to slightly open the outside-air damper and the second point of the two-point calibration accuracy check of sensing element-to-controller readout for outside-air, return-air, and mixed-air temperatures shall be performed. The controller-tuning procedure shall be performed. The mixed-air temperature controller "MANUAL/AUTO" switch shall be indexed to the "AUTO" position. The mixed-air temperature controller shall be placed in the local setpoint mode and set at the temperature setpoint as shown.

(6) The cooling coil temperature controller "MANUAL/AUTO" station shall be indexed to the "MANUAL" position, and the calibration accuracy check of sensing element-to-controller readout shall be performed. The controller shall be placed in the local-setpoint mode, and set at the temperature setpoint as shown. The controller "MANUAL/AUTO" station shall be indexed to the "AUTO" position, and the controller-tuning procedure performed.

(7) An unoccupied-mode signal shall be applied, and it shall be verified that the occupied-mode pilot light turns off, the HVAC system shuts down, and the control system assumes the specified shutdown conditions. The night-thermostat temperature setting shall be turned upward, and it shall be verified that the HVAC system starts; the setting shall be turned downward, and it shall be verified that the HVAC system stops. The night thermostat shall be set at the setpoint as shown.

(8) With the HVAC system running, a filter differential-pressure-switch input signal shall be simulated at the device. It shall be verified that the filter pilot light turns on, and that contact output at the EMCS terminals is made. The differential-pressure switch shall be set at the setpoint as shown.

(9) With the HVAC system running, a freezestat trip input signal shall be simulated at the device. HVAC system shutdown shall be observed. It shall be verified that the low-temperature pilot light turns on, and that contact output at the EMCS terminals is made. The freezestat shall be set at the setpoint as shown. The HVAC system shall be restarted by manual restart, and it shall be verified that the pilot light turns off.

(10) With the HVAC system running, a smoke-detector trip input signal shall be simulated at each detector, and control-device actions and interlock functions, as described in paragraph CONTROL SEQUENCES OF OPERATION shall be verified. Simulation shall be performed without false-alarming any Life Safety systems. It shall be verified that the HVAC system shuts down and that the smoke-detector pilot light turns on, and contact output at the EMCS terminals is made. The detectors shall be reset. The HVAC system

shall be restarted by manual restart, and it shall be verified that the pilot light turns off.

(11) Velocity setpoints for minimum and maximum flow and temperature setpoints for the heating/cooling dead band shall be set, for each VAV terminal unit. The actions of the controller, the operation of the damper, and the operation of heating shall be verified. It shall be verified that space temperature is maintained.

3.3.5 Single-Zone with Hydronic Heating and Cooling Coils; No Return Fan

Steps for installation shall be as follows:

a. Step 1 - System Inspection: The HVAC system shall be verified in its shutdown condition. Power and main air shall be available at the HVAC system control panel. The outside-air and relief-air dampers shall be closed, the return-air damper shall be open, and the cooling-coil valve shall be closed.

b. Step 2 - Calibration Accuracy Check with HVAC System Shutdown: Readings shall be taken with a digital thermometer at each temperature-sensing element location. Each controller display shall be read, and the thermometer and controller-display readings logged. The calibration accuracy of the sensing element-to-controller readout for outside-air, return-air, and space temperatures shall be checked.

c. Step 3 - Actuator Range Adjustments: A signal shall be applied to the actuator, using the controller "MANUAL/AUTO" station in "MANUAL." The proper operation of the actuators and positioners for all dampers and valves shall be verified. The signal shall be varied from live zero of 4 ma or 21 kPa to 20 ma or 103 kPa , and it shall be verified that the actuators travel from zero stroke to full stroke within the signal range. It shall be verified that all sequenced and parallel-operated actuators move from zero stroke to full stroke in the proper direction, and move the connected device in the proper direction from one extreme position to the other.

d. Step 4 - Control-System Commissioning:

(1) With the fan ready to start, the ventilation-delay-mode signal shall be applied, and it shall be verified that the ventilation-delay-mode pilot light turns on. The occupied-mode signal shall be applied, and it shall be verified that the occupied-mode pilot light turns on and that supply fan starts. It shall be verified that the outside-air and relief-air dampers are closed, the return-air damper is open, and the heating-coil and cooling-coil valves are under control, by slightly changing the controller outputs. The ventilation-delay-mode signal shall be released, and it shall be verified that the ventilation-delay-mode pilot light turns off and that the outside-air, return-air, and relief-air dampers come under control by changing the controller output.

(2) The minimum-outside-air-mode signal shall be applied. It shall be verified that the outside-air damper opens to minimum position and the economizer pilot light is off.

(3) The space-temperature controller "MANUAL/AUTO" station shall be indexed to the "MANUAL" position. An economizer-mode input signal shall be simulated and it shall be verified that the economizer-mode pilot light turns on. The space-temperature controller output shall be changed and the second point of the two-point calibration accuracy check of sensing element-to-controller readout for outside-air, return-air, and space temperatures shall be performed. The controller shall be placed in the remote-setpoint mode. The setpoint low-end limit shall be set to 19 degrees C and the high-end limit shall be set to 22 degrees C. Proper operation of the temperature setpoint device at the space-temperature sensing element and transmitter location shall be verified. The space-temperature controller tuning procedure shall be performed. The controller "MANUAL/AUTO" station shall be indexed to the "AUTO" position and the temperature setpoint device shall be set to the space temperature setpoint as shown. A change in space temperature shall be simulated and it shall be verified that the heating-coil valve and the cooling-coil valve operate in sequence as shown.

(4) An unoccupied-mode signal shall be applied, and it shall be verified that the occupied-mode pilot light turns off, the HVAC system shuts down, and the control system assumes the specified shutdown conditions. The night-thermostat temperature setting shall be turned upward, and it shall be verified that the HVAC system starts; the setting shall be turned downward, and it shall be verified that the HVAC system stops. The night thermostat shall be set at the setpoint as shown.

(5) With the HVAC system running, a filter differential-pressure switch input signal shall be simulated at the device. It shall be verified that the filter pilot light turns on, and that contact output at the EMCS terminals is made. The differential-pressure switch shall be set at the setpoint as shown.

(6) With the HVAC system running, a freezestat trip input signal shall be simulated at the device. HVAC system shutdown shall be verified, the low-temperature pilot light shall turn on, and contact output at the EMCS terminals shall be verified. The freezestat shall be set at the setpoint as shown. The HVAC system shall be restarted by manual restart, and it shall be verified that the pilot light turns off.

(7) With the HVAC system running, a smoke-detector trip input signal shall be simulated at each detector, and control-device actions and interlock functions, as described in paragraph CONTROL SEQUENCES OF OPERATION shall be verified. Simulation shall be performed without false-alarming any Life Safety systems. It shall be verified that the HVAC system shuts down and that the smoke-detector pilot light turns on, and contact output at the EMCS terminals is made. The detectors shall be reset. The HVAC system shall be restarted by manual restart, and it shall be verified that the pilot light turns off.

3.4 BALANCING, COMMISSIONING, AND TESTING

3.4.1 Coordination with HVAC System Balancing

Commissioning of the control system, except for tuning of controllers, shall be performed prior to or simultaneous with HVAC system balancing. The Contractor shall tune the HVAC control system after all air-system and hydronic-system balancing has been completed, minimum damper positions set and a report has been issued.

3.4.2 Control System Calibration, Adjustments, and Commissioning

Control system commissioning shall be performed for each HVAC system, using test plans and procedures previously approved by the Government. The Contractor shall provide all personnel, equipment, instrumentation, and supplies necessary to perform commissioning and testing of the HVAC control system. All instrumentation and controls shall be calibrated and the specified accuracy shall be verified using test equipment with calibration traceable to NIST standards. Wiring shall be tested for continuity and for ground, open, and short circuits. Tubing systems shall be tested for leaks. Mechanical control devices shall be adjusted to operate as specified. HVAC control panels shall be pretested off-site as a functioning assembly ready for field connections, calibration, adjustment, and commissioning of the operational HVAC control system. Written notification of any planned commissioning or testing of the HVAC Control systems shall be given to the Government at least 14 calendar days in advance.

3.4.3 Performance Verification Test

The Contractor shall demonstrate compliance of the HVAC control system with the contract documents. Using test plans and procedures previously approved by the Government, the Contractor shall demonstrate all physical and functional requirements of the project. The performance verification test shall show, step-by-step, the actions and results demonstrating that the control systems perform in accordance with the sequences of operation. The performance verification test shall not be started until after receipt by the Contractor of written permission by the Government, based on Government approval of the commissioning report and completion of balancing. The tests shall not be conducted during scheduled seasonal off-periods of base heating and cooling systems.

3.4.4 Posted and Panel Instructions

Posted and panel instructions, showing the final installed conditions, shall be provided for each system. The posted instructions shall consist of half-size laminated drawings and shall include the control system schematic, equipment schedule, ladder diagram, sequence of operation, panel arrangement drawings, wiring diagram, and valve and damper schedules. The posted instructions shall be permanently affixed, by mechanical means, to a wall near the control panel. Panel instructions shall consist of laminated letter-size sheets and shall include a routine maintenance checklist and controller configuration check sheets with final configuration record for each controller. Panel instructions and one copy of the operation and maintenance manuals, previously described herein, shall be placed inside each control panel.

3.5 TRAINING

3.5.1 Training-Course Requirements

A training course shall be conducted for 2 operating staff members designated by the Contracting Officer. The training period, for a total of 32 hours of normal working time, shall be conducted within 30 days after successful completion of the performance verification test. The training course shall be conducted at the project site. Audiovisual equipment and 2 sets of all other training materials and supplies shall be provided. A training day is defined as 8 hours of classroom instruction, including two 15-minute breaks and excluding lunchtime, Monday through Friday, during the daytime shift in effect at the training facility.

3.5.2 Training-Course Content

For guidance in planning the required instruction, the Contractor shall assume that attendees will have a high school education or equivalent, and are familiar with HVAC systems. The training course shall cover all of the material contained in the operating and maintenance instructions, the layout and location of each HVAC control panel, the layout of one of each type of unitary equipment and the locations of each, the location of each system-control device external to the panels, the location of the compressed-air station, preventive maintenance, troubleshooting, diagnostics, calibration, adjustment, commissioning, tuning, and repair procedures. Typical systems and similar systems may be treated as a group, with instruction on the physical layout of one such system. The results of the performance verification test and the calibration, adjustment and commissioning report shall be presented as benchmarks of HVAC control-system performance by which to measure operation and maintenance effectiveness.

END OF SECTION

SECTION 15990

TESTING, ADJUSTING, AND BALANCING OF HVAC SYSTEMS
08/97

PART 1 GENERAL

1.1 REFERENCES

The publications listed below form a part of this specification to the extent referenced. The publications are referred to in the text by basic designation only.

ASSOCIATED AIR BALANCE COUNCIL (AABC)

AABC MN-1	(1989) National Standards for Testing and Balancing Heating, Ventilating, and Air Conditioning Systems

NATIONAL ENVIRONMENTAL BALANCING BUREAU (NEBB)

NEBB-01	(1991) Procedural Standards for Testing Adjusting Balancing of Environmental Systems

1.2 SUBMITTALS

Government approval is required for submittals with a "GA" designation; submittals having a "FIO" designation are for information only. The following shall be submitted in accordance with Section 01300 SUBMITTAL PROCEDURES:

SD-01 Data

TAB Related HVAC Submittals; FIO.

A list of the TAB Related HVAC Submittals, no later than 7 days after the approval of the TAB Specialist.

SD-04 Drawings

TAB Schematic Drawings and Report Forms; GA.

Three copies of the TAB Schematic Drawings and Report Forms, no later than 21 days prior to the start of TAB field measurements.

SD-06 Instructions

TAB Procedures; GA.

Proposed procedures for TAB, submitted with the TAB Schematic Drawings and Report Forms.

SD-07 Schedules

Systems Readiness Check; FIO.

Proposed date and time to begin the Systems Readiness Check, no later than 7 days prior to the start of the Systems Readiness Check.

TAB Execution; GA.

Proposed date and time to begin field measurements, making adjustments, etc., for the TAB Report, submitted with the Systems Readiness Check Report.

TAB Verification; GA.

Proposed date and time to begin the TAB Verification, submitted with the TAB Report.

SD-08 Statements

TAB Firm; GA.

Certification of the proposed TAB Firm's qualifications by either AABC or NEBB to perform the duties specified herein and in other related Sections, no later than 21 days after the Notice to Proceed. The documentation shall include the date that the Certification was initially granted and the date that the current Certification expires. Any lapses in Certification of the proposed TAB Firm or disciplinary action taken by AABC or NEBB against the proposed TAB Firm shall be described in detail.

TAB Specialist; GA.

Certification of the proposed TAB Specialist's qualifications by either AABC or NEBB to perform the duties specified herein and in other related Sections, no later than 21 days after the Notice to Proceed. The documentation shall include the date that the Certification was initially granted and the date that the current Certification expires. Any lapses in Certification of the proposed TAB Specialist or disciplinary action taken by AABC or NEBB against the proposed TAB Specialist shall be described in detail.

Instrument Calibration; FIO.

List of each instrument to be used during TAB, stating calibration requirements required or recommended by both the TAB Standard and the instrument manufacturer and the actual calibration history of the instrument, submitted with the TAB Procedures. The calibration history shall include dates calibrated, the qualifications of the calibration laboratory, and the calibration procedures used.

SD-09 Reports

Design Review Report; GA.

A copy of the Design Review Report, no later than 14 days after approval of the TAB Firm and the TAB Specialist.

Systems Readiness Check Report; GA.

A copy of completed checklists for each system, each signed by the TAB Specialist, at least 7 days prior to the start of TAB Execution. All items in the Systems Readiness Check Report shall be signed by the TAB Specialist

and shall bear the seal of the Professional Society or National Association used as the TAB Standard.

TAB Report; GA.

Three copies of the completed TAB Reports, no later that 7 days after the execution of TAB. All items in the TAB Report shall be signed by the TAB Specialist and shall bear the seal of the Professional Society or National Association used as the TAB Standard.

TAB Verification Report; GA.

Three copies of the completed TAB Verification Report, no later that 7 days after the execution of TAB Verification. All items in the TAB Verification Report shall be signed by the TAB Specialist and shall bear the seal of the Professional Society or National Association used as the TAB Standard.

SD-13 Certificates

Ductwork Leak Testing; FIO.

A written statement signed by the TAB Specialist certifying that the TAB Specialist witnessed the Ductwork Leak Testing, it was successfully completed, and that there are no known deficiencies related to the ductwork installation that will prevent TAB from producing satisfactory results.

1.3 SIMILAR TERMS

In some instances, terminology differs between the Contract and the TAB Standard primarily because the intent of this Section is to use the industry standards specified, along with additional requirements listed herein to produce optimal results. The following table of similar terms is provided for clarification only. Contract requirements take precedent over the corresponding AABC or NEBB requirements where differences exist.

SIMILAR TERMS

Contract Term	AABC Term	NEBB Term
TAB Standard	National Standards for Testing and Balancing Heating, Ventilating, and Air Conditioning Systems	Procedural Standards for Testing Adjusting Balancing of Environmental Systems
TAB Specialist	TAB Engineer	TAB Supervisor
Systems Readiness Check	Construction Phase Inspection	Field Readiness Check & Preliminary Field Procedures.

1.4 TAB STANDARD

TAB shall be performed in accordance with the requirements of the standard under which the TAB Firm's qualifications are approved, i.e., AABC MN-1or NEBB-01, unless otherwise specified herein. All recommendations and suggested practices contained in the TAB Standard shall be considered

mandatory. The provisions of the TAB Standard, including checklists, report forms, etc., shall, as nearly as practical, be used to satisfy the Contract requirements. The TAB Standard shall be used for all aspects of TAB, including qualifications for the TAB Firm and Specialist and calibration of TAB instruments. Where the instrument manufacturer calibration recommendations are more stringent than those listed in the TAB Standard, the manufacturer's recommendations shall be adhered to. All quality assurance provisions of the TAB Standard such as performance guarantees shall be part of this contract. For systems or system components not covered in the TAB Standard, TAB procedures shall be developed by the TAB Specialist. Where new procedures, requirements, etc., applicable to the Contract requirements have been published or adopted by the body responsible for the TAB Standard used (AABC or NEBB), the requirements and recommendations contained in these procedures and requirements shall be considered mandatory.

1.5 QUALIFICATIONS

1.5.1 TAB Firm

The TAB Firm shall be either a member of AABC or certified by the NEBB and certified in all categories and functions where measurements or performance are specified on the plans and specifications, including TAB of environmental systems building systems commissioning. The certification shall be maintained for the entire duration of duties specified herein. If, for any reason, the firm loses subject certification during this period, the Contractor shall immediately notify the Contracting Officer and submit another TAB Firm for approval. Any firm that has been the subject of disciplinary action by either the AABC or the NEBB within the five years preceding Contract Award shall not be eligible to perform any duties related to the HVAC systems, including TAB. All work specified in this Section and in other related Sections to be performed by the TAB Firm shall be considered invalid if the TAB Firm loses its certification prior to Contract completion and must be performed by an approved successor.

1.5.2 TAB Specialist

The TAB Specialist shall be either a member of AABC or an experienced technician of the Firm certified by the NEBB. The certification shall be maintained for the entire duration of duties specified herein. If, for any reason, the Specialist loses subject certification during this period, the Contractor shall immediately notify the Contracting Officer and submit another TAB Specialist for approval. Any individual that has been the subject of disciplinary action by either the AABC or the NEBB within the five years preceding Contract Award shall not be eligible to perform any duties related to the HVAC systems, including TAB. All work specified in this Section and in other related Sections performed by the TAB Specialist shall be considered invalid if the TAB Specialist loses its certification prior to Contract completion and must be performed by the approved successor.

1.6 TAB SPECIALIST RESPONSIBILITIES

All TAB work specified herein and in related sections shall be performed under the direct guidance of the TAB Specialist. The TAB Specialist shall participate in the commissioning process specified in Section 15995COMMISSIONING OF HVAC SYSTEMS.

PART 2 PRODUCTS (NOT APPLICABLE)

PART 3 EXECUTION

3.1 DESIGN REVIEW

The TAB Specialist shall review the Contract Plans and Specifications and advise the Contracting Officer of any deficiencies that would prevent the HVAC systems from effectively operating in accordance with the sequence of operation specified or prevent the effective and accurate TAB of the system. The TAB Specialist shall provide a Design Review Report individually listing each deficiency and the corresponding proposed corrective action necessary for proper system operation.

3.2 TAB RELATED HVAC SUBMITTALS

The TAB Specialist shall prepare a list of the submittals from the Contract Submittal Register that relate to the successful accomplishment of all HVAC TAB. The submittals identified on this list shall be accompanied by a letter of approval signed and dated by the TAB Specialist when submitted to the Government. The TAB Specialist shall also ensure that the location and details of ports, terminals, connections, etc., necessary to perform TAB are identified on the submittals.

3.3 TAB SCHEMATIC DRAWINGS AND REPORT FORMS

A schematic drawing showing each system component, including balancing devices, shall be provided for each system. Each drawing shall be accompanied by a copy of all report forms required by the TAB Standard used for that system. Where applicable, the acceptable range of operation or appropriate setting for each component shall be included on the forms or as an attachment to the forms. The schematic drawings shall identify all testing points and cross reference these points to the report forms and procedures.

3.4 TESTING, ADJUSTING, AND BALANCING

3.4.1 TAB Procedures

Step by step procedures for each measurement required during TAB Execution shall be provided. The procedures shall be oriented such that there is a separate section for each system. The procedures shall include measures to ensure that each system performs as specified in all operating modes, interactions with other components (such as exhaust fans, kitchen hoods, fume hoods, relief vents, etc.) and systems, and with all seasonal operating differences, diversity, simulated loads, and pressure relationships required.

3.4.2 Systems Readiness Check

The TAB Specialist shall inspect each system to ensure that it is complete, including installation and operation of controls, and that all aspects of the facility that have any bearing on the HVAC systems, including installation of ceilings, walls, windows, doors, and partitions, are complete to the extent that TAB results will not be affected by any detail or touch-up work remaining. The TAB Specialist shall also verify that all

items such as ductwork and piping ports, terminals, connections, etc., necessary to perform TAB shall be complete during the Systems Readiness Check.

3.4.3 Preparation of TAB Report

Preparation of the TAB Report shall begin only when the Systems Readiness Report has been approved. The Report shall be oriented so that there is a separate section for each system. The Report shall include a copy of the appropriate approved Schematic Drawings and TAB Related Submittals, such as pump curves, fan curves, etc., along with the completed report forms for each system. The operating points measured during successful TAB Execution and the theoretical operating points listed in the approved submittals shall be marked on the performance curves and tables. Where possible, adjustments shall be made using an "industry standard" technique which would result in the greatest energy savings, such as adjusting the speed of a fan instead of throttling the flow. Any deficiencies outside of the realm of normal adjustments and balancing during TAB Execution shall be noted along with a description of corrective action performed to bring the measurement into the specified range. If, for any reason, the TAB Specialist determines during TAB Execution that any Contract requirement cannot be met, the TAB Specialist shall immediately provide a written description of the deficiency and the corresponding proposed corrective action necessary for proper system operation to the Contracting Officer.

3.4.4 TAB Verification

The TAB Specialist shall recheck ten percent of the measurements listed in the Tab Report and prepare a TAB Verification Report. The measurements selected for verification and the individuals that witness the verification will be selected by the Contracting Officer's Representative (COR). The measurements will be recorded in the same manner as required for the TAB Report. All measurements that fall outside the acceptable operating range specified shall be accompanied by an explanation as to why the measurement does not correlate with that listed in the TAB Report and a description of corrective action performed to bring the measurement into the specified range. If over 20 percent of the measurements selected by the COR for verification fall outside of the acceptable operating range specified, the COR will select an additional ten percent for verification. If over 20 percent of the total tested (including both test groups) fall outside of the acceptable range, the TAB Report shall be considered invalid and all contract TAB work shall be repeated beginning with the Systems Readiness Check.

3.4.5 Marking of Setting

Following approval of TAB Verification Report, the setting of all HVAC adjustment devices including valves, splitters, and dampers shall be permanently marked by the TAB Specialist so that adjustment can be restored if disturbed at any time.

3.4.6 Identification of Test Ports

The TAB Specialist shall permanently and legibly identify the location points of duct test ports. If the ductwork has exterior insulation, the identification shall be made on the exterior side of the insulation. All

penetrations through ductwork and ductwork insulation shall be sealed to prevent air leakage or to maintain integrity of vapor barrier.

End of Section

SECTION 15995

COMMISSIONING OF HVAC SYSTEMS
01/93

PART 1 GENERAL

1.1 SUBMITTALS

Government approval is required for submittals with a "GA" designation; submittals with "FIO" designation are for information only. The following shall be submitted in accordance with Section 01300 SUBMITTAL PROCEDURES:

SD-01 Data

Commissioning Team; GA.

List of team members who will represent the Contractor in the pre-commissioning checks and functional performance testing, at least 2 weeks prior to the start of pre-commissioning checks. Proposed revision to the list, prior to the start of the impacted work.

SD-06 Instructions

Test Procedures; GA.

Detailed procedures for pre-commissioning checks and functional performance tests, at least 4 weeks prior to the start of pre-commissioning checks.

SD-07 Schedules

Test Schedule; GA.

Schedule for pre-commissioning checks and functional performance tests, at least 2 weeks prior to the start of pre-commissioning checks.

SD-09 Reports

Test Reports; GA.

Completed pre-commissioning checklists and functional performance test checklists organized by system and by subsystem and submitted as one package. The results of failed tests shall be included along with a description of the corrective action taken.

1.2 SEQUENCING AND SCHEDULING

The work described in this Section shall begin only after all work required in related Sections, including Section 15950 HEATING, VENTILATING, AND AIR CONDITIONING (HVAC) CONTROL SYSTEMS and Section 15990TESTING, ADJUSTING AND BALANCING OF HVAC SYSTEMS, has been successfully completed, and all test and inspection reports and operation and maintenance manuals required in these Sections have been submitted and approved.

PART 2 PRODUCTS (NOT APPLICABLE)

PART 3 EXECUTION

3.1 COMMISSIONING TEAM AND CHECKLISTS

The Contractor shall designate team members to participate in the pre-commissioning checks and the functional performance testing specified herein. In addition, the Government will be represented by a representative of the Contracting Officer, the Design Agent's Representative, and the Using Agency. The team members shall be as follows:

Designation	Function
Q	Contractor's Chief Quality Control Representative
M	Contractor's Mechanical Representative
E	Contractor's Electrical Representative
T	Contractor's Testing, Adjusting, and Balancing Representative
C	Contractor's Controls Representative
D	Design Agent's Representative
O	Contracting Officer's Representative
U	Using Agency's Representative

Each checklist shown in appendices A and B shall be completed by the commissioning team. Acceptance by each commissioning team member of each pre-commissioning checklist item shall be indicated by initials and date unless an "X" is shown indicating that participation by that individual is not required. Acceptance by each commissioning team member of each functional performance test checklist shall be indicated by signature and date.

3.2 TESTS

The pre-commissioning checks and functional performance tests shall be performed in a manner which essentially duplicates the checking, testing, and inspection methods established in the related Sections. Where checking, testing, and inspection methods are not specified in other Sections, methods shall be established which will provide the information required. Testing and verification required by this section shall be performed during the Commissioning phase. Requirements in related Sections are independent from the requirements of this Section and shall not be used to satisfy any of the requirements specified in this Section. The Contractor shall provide all materials, services, and labor required to perform the pre-commissioning checks and functional performance tests. A pre-commissioning check or functional performance test shall be aborted if any system deficiency prevents the successful completion of the test or if any participating non-Government commissioning team member of which participation is specified is not present for the test. The Contractor shall reimburse the Government for all costs associated with effort lost due to tests that are aborted. These costs shall include salary, travel costs and per diem (where applicable) for Government commissioning team members.

3.2.1 Pre-Commissioning Checks

Pre-commissioning checks shall be performed for the items indicated on the checklists in Appendix A. Deficiencies discovered during these checks shall

be corrected and retested in accordance with the applicable contract requirements.

3.2.2 Functional Performance Tests

Functional performance tests shall be performed for the items indicated on the checklists in Appendix B. Functional performance tests shall begin only after all pre-commissioning checks have been successfully completed. Tests shall prove all modes of the sequences of operation, and shall verify all other relevant contract requirements. Tests shall begin with equipment or components and shall progress through subsystems to complete systems. Upon failure of any functional performance test checklist item, the Contractor shall correct all deficiencies in accordance with the applicable contract requirements. The checklist shall then be repeated until it has been completed with no errors.

APPENDIX A

PRE-COMMISSIONING CHECKLISTS

Pre-commissioning checklist - Piping

For _____ Piping System

Checklist Item	Q	M	E	T	C	D	O	U
Installation								
a. Piping complete.	___	___	X	___	X	___	___	___
b. As-built shop drawings submitted.	___	___	X	___	X	___	___	___
c. Piping flushed and cleaned.	___	___	X	___	X	___	___	___
d. Strainers cleaned.	___	___	X	___	X	___	___	___
e. Valves installed as required.	___	___	X	___	X	___	___	___
f. Piping insulated as required.	___	___	X	___	X	___	___	___
g. Thermometers and gauges installed as required.	___	___	X	___	X	___	___	___
h. Verify operation of valves.	___	___	X	___	___	___	___	___
i. Air vents installed as specified.	___	___	X	X	X	___	___	___
j. Flexible connectors installed as specified.	___	___	X	X	X	___	___	___
k. Verify that piping has been labeled and valves identified as specified.	___	___	X	___	___	___	___	___
Testing, Adjusting, and Balancing (TAB)								
a. Hydrostatic test complete.	___	___	X	___	X	___	___	___
b. TAB operation complete.	___	___	X	___	___	___	___	___

Pre-commissioning Checklist - Ductwork

For Air Handler: _____

Checklist Item	Q	M	E	T	C	D	O	U
Installation								
a. Ductwork complete.	___	___	X	___	X	___	___	___
b. As-built shop drawings submitted.	___	___	X	___	X	___	___	___
c. Ductwork leak test complete.	___	___	X	___	X	___	___	___

NOTE: The first bracketed item d will be used for Army projects, the second for Air Force projects.

d. Ductwork insulated as required.	___	___	X	___	X	___	___	___
e. Thermometers and gauges installed as required.	___	___	___	___	___	___	___	___
f. Verify open/closed status of dampers.	___	___	X	___	X	___	___	___
g. Verify smoke dampers operation.	___	___	X	___	___	___	___	___
h. Flexible connectors installed as specified.	___	___	X	___	X	___	___	___
Testing, Adjusting, and Balancing (TAB)								
a. TAB operation complete.	___	___	X	___	X	___	___	___

Pre-commissioning Checklist - Variable Volume Air Handling Unit

For Air Handling Unit: _____

Checklist Item	Q	M	E	T	C	D	O	U
Installation								
a. Vibration isolation devices installed.	___	___	X	X	X	___	___	___
b. Inspection and access doors are operable and sealed.	___	___	X	___	X	___	___	___
c. Casing undamaged.	___	___	X	X	X	___	___	___
d. Insulation undamaged.	___	___	X	X	X	___	___	___
e. Condensate drainage is unobstructed. (Visually verify drainage by pouring a cup of water into drain pan.)	___	___	X	X	X	___	___	___
f. Fan belt adjusted.	___	___	X	___	X	___	___	___
g. Manufacturer's required maintenance clearance provided.	___	___	X	X	X	___	___	___
Electrical								
a. Power available to unit disconnect.	___	___	___	X	X	___	___	___
b. Power available to unit control panel.	___	___	___	X	___	___	___	___
c. Proper motor rotation verified.	___	___	___	___	X	___	___	___
d. Verify that power disconnect is located within sight of the unit it controls.	___	___	___	X	___	___	___	___
Coils								
a. Chilled water piping properly connected.	___	___	X	X	X	___	___	___
b. Chilled water piping pressure tested.	___	___	X	X	X	___	___	___
c. Hot water piping properly connected.	___	___	X	X	X	___	___	___
d. Hot water piping pressure tested.	___	___	X	X	X	___	___	___
e. Air vents installed on water coils with shutoff valves as specified.	___	___	X	X	X	___	___	___
f. Any damage to coil fins has been repaired.	___	___	X	___	X	___	___	___
Controls								
a. Control valves/actuators properly installed.	___	___	X	___	___	___	___	___

b. Control valves/actuators operable.	___	___	X	___	___	___	___	___
c. Dampers/actuators properly installed.	___	___	X	___	___	___	___	___
d. Dampers/actuators operable.	___	___	X	___	___	___	___	___
e. Verify proper location, installation and calibration of duct static pressure sensor.	___	___	X	___	___	___	___	___
f. Fan air volume controller operable.	___	___	X	___	___	___	___	___
g. Air handler controls system operational.	___	___	X	___	___	___	___	___
Testing, Adjusting, and Balancing (TAB)								
a. Construction filters removed and replaced.	___	___	X	___	___	___	___	___
b. TAB report submitted.	___	___	X	___	X	___	___	___
c. TAB results within +10%/-0% of L/s shown on drawings								
d. TAB results for outside air intake within +10%/-0% of both the minimum and maximum L/s shown on drawings.	___	___	X	___	X	___	___	___

Pre-commissioning Checklist - VAV Terminal

For VAV Terminal: _____

Checklist Item	Q	M	E	T	C	D	O	U
Installation								
a. VAV terminal in place.	___	___	X	X	X	___	___	___
b. VAV terminal ducted.	___	___	X	X	X	___	___	___
c. VAV terminal connected to controls.	___	___	X	X	___	___	___	___
d. Reheat coil connected to hot water pipe.	___	___	X	___	X	___	___	___
e. Manufacturer's required maintenance clearance provided.	___	___	X	X	X	___	___	___
Controls								
a. Cooling only VAV terminal controls set.	___	___	X	X	___	___	___	___
b. Cooling only VAV controls verified.	___	___	X	X	___	___	___	___
c. Reheat VAV terminal controls set.	___	___	X	X	___	___	___	___
d. Reheat terminal/coil controls verified.	___	___	X	X	___	___	___	___
Testing, Adjusting, and Balancing (TAB)								
a. Verify terminal maximum air flow set.	___	___	X	___	___	___	___	___
b. Verify terminal minimum air flow set.	___	___	X	___	___	___	___	___
c. TAB operation complete.	___	___	X	___	X	___	___	___

Pre-commissioning Checklist - Pumps

For Pump: _____

Checklist Item	Q	M	E	T	C	D	O	U
Installation								
a. Pumps grouted in place.	___	___	X	X	X	___	___	___
b. Pump vibration isolation devices functional.	___	___	X	X	X	___	___	___
c. Pump/motor coupling alignment verified.	___	___	X	X	X	___	___	___
d. Piping system installed.	___	___	X	X	X	___	___	___
e. Piping system pressure tested.	___	___	X	X	X	___	___	___
f. Pump not leaking.	___	___	X	X	X	___	___	___
g. Field assembled couplings aligned to meet manufacturer's prescribed tolerances.	___	___	X	X	X	___	___	___
Electrical								
a. Power available to pump disconnect.	___	___	___	X	X	___	___	___
b. Pump rotation verified.	___	___	___	X	X	___	___	___
c. Control system interlocks functional.	___	___	___	X	___	___	___	___
d. Verify that power disconnect is located within sight of the unit it controls.	___	___	___	X	___	___	___	___
Testing, Adjusting, and Balancing (TAB)								
a. Pressure/temperature gauges installed.	___	___	X	___	X	___	___	___
b. Piping system cleaned.	___	___	X	X	X	___	___	___
c. Chemical water treatment complete.	___	___	X	X	X	___	___	___
d. Water balance complete.	___	___	X	___	X	___	___	___
e. Water balance with design maximum flow.	___	___	X	___	X	___	___	___
f. TAB Report submitted.	___	___	X	___	X	___	___	___

Pre-commissioning Checklist - Packaged Air Cooled Chiller

For Chiller: _____

Checklist Item	Q	M	E	T	C	D	O	U
Installation								
a. Chiller properly piped.	___	___	X	___	___	___	___	___
b. Chilled water pipe leak tested.	___	___	X	X	X	___	___	___
c. Verify that refrigerant used complies with specified requirements.	___	___	X	X	X	___	___	___
d. Any damage to coil fins has been repaired.	___	___	X	___	X	___	___	___
e. Manufacturer's required maintenance clearance provided.	___	___	X	X	X	___	___	___
Electrical								
a. Power available to unit disconnect.	___	___	___	X	___	___	___	___
b. Power available to unit control panel.	___	___	___	X	___	___	___	___
c. Separate power is supplied to electric heating tape.	___	___	___	X	___	___	___	___
d. Verify that power disconnect is located within sight of the unit it controls.	___	___	___	X	___	___	___	___
Controls								
a. Factory startup and checkout complete.	___	___	X	X	___	___	___	___
b. Chiller safety/protection devices tested.	___	___	X	X	___	___	___	___
c. Chilled water flow switch installed.	___	___	X	X	___	___	___	___
d. Chilled water flow switch tested.	___	___	X	X	___	___	___	___
e. Chilled water pump interlock installed.	___	___	X	X	X	___	___	___
f. Chilled water pump interlock tested.	___	___	___	X	___	___	___	___

Pre-commissioning Checklist - Hot Water Boiler

For Boiler: _____

Checklist Item	Q	M	E	T	C	D	O	U
Installation								
a. Boiler flue installed.	___	___	X	___	___	___	___	___
b. Boiler hot water piping installed.	___	___	X	___	___	___	___	___
c. Boiler hot water piping tested.	___	___	X	X	___	___	___	___
d. Boiler makeup water piping installed.	___	___	X	___	___	___	___	___
e. Boiler fuel oil piping installed.	___	___	X	X	X	___	___	___
f. Boiler fuel oil piping tested.	___	___	X	X	X	___	___	___
g. Boiler gas piping installed.	___	___	X	X	X	___	___	___
h. Boiler gas piping tested.	___	___	X	X	X	___	___	___
i. Manufacturer's required maintenance clearance provided.	___	___	X	___	___	___	___	___
Startup								
a. Boiler system cleaned and filled with treated water.	___	___	X	___	___	___	___	___
b. Boiler safety/protection devices, including high temperature burner shut-off, low water cutoff, flame failure, pre and post purge, have been tested.	___	___	___	X	___	___	___	___
c. Verify that PRV rating conforms to boiler rating.	___	___	___	X	___	___	___	___
d. Boiler water treatment system functional.	___	___	X	X	___	___	___	___
e. Boiler startup and checkout complete.	___	___	X	X	___	___	___	___
f. Combustion efficiency demonstrated.	___	___	X	___	X	___	___	___
Electrical								
a. Verify that power disconnect is located within sight of the unit served.	___	___	___	X	___	___	___	___
Controls								
a. Hot water pump interlock installed.	___	___	___	X	___	___	___	___
b. Hot water pump interlock tested.	___	___	___	X	___	___	___	___

c. Hot water heating system balanced.	___	___	X	X	___	___	___	___
d. Hot water heating controls operational.	___	___	X	X	___	___	___	___

Pre-commissioning Checklist - Unit Heater

For Unit Heater: _____

Checklist Item	Q	M	E	T	C	D	O	U
Installation								
a. Hot water piping properly connected.	___	___	X	___	___	___	___	___
b. Hot water piping pressure tested.	___	___	X	___	___	___	___	___
c. Air vent installed on hot water coil with shutoff valve as specified.	___	___	X	X	X	___	___	___
d. Any damage to coil fins has been repaired.	___	___	X	___	X	___	___	___
e. Manufacturer's required maintenance/ operational clearance provided.	___	___	X	X	X	___	___	___
Electrical								
a. Power available to unit disconnect.	___	___	___	X	___	___	___	___
b. Proper motor rotation verified.	___	___	___	X	X	___	___	___
c. Verify that power disconnect is located within sight of the unit it controls.	___	___	___	X	___	___	___	___
d. Power available to electric heating coil.	___	___	___	X	___	___	___	___
Controls								
a. Control valves properly installed.	___	___	X	___	___	___	___	___
b. Control valves operable.	___	___	X	X	___	___	___	___
c. Verify proper location and installation of thermostat.	___	___	X	___	___	___	___	___
Testing, Adjusting, and Balancing (TAB)								
a. TAB Report submitted.	___	___	X	___	X	___	___	___

Pre-commissioning Checklist - Exhaust Fan

For Exhaust Fan: _____

Checklist Item	Q	M	E	T	C	D	O	U
Installation								
a. Fan belt adjusted.	___	___	X	___	X	___	___	___
Electrical								
a. Power available to fan disconnect.	___	___	___	X	___	___	___	___
b. Proper motor rotation verified.	___	___	___	___	X	___	___	___
c. Verify that power disconnect is located within sight of the unit it controls.	___	___	___	X	___	___	___	___
Controls								
a. Control interlocks properly installed.	___	___	___	X	___	___	___	___
b. Control interlocks operable.	___	___	___	X	___	___	___	___
c. Dampers/actuators properly installed.	___	___	X	___	___	___	___	___
d. Dampers/actuators operable.	___	___	X	___	___	___	___	___
e. Verify proper location and installation of thermostat.	___	___	X	___	___	___	___	___
Testing, Adjusting, and Balancing (TAB)								
a. TAB results +10%/-0% to L/s shown on drawings	___	___	X	___	X	___	___	___
b. TAB Report submitted.	___	___	X	___	X	___	___	___

Pre-commissioning Checklist - HVAC System Controls

For HVAC System: _____

Checklist Item	Q	M	E	T	C	D	O	U
Installation								
a. As-built shop drawings submitted.	___	___	X	X	___	___	___	___
b. Layout of control panel matches drawings.	___	___	X	X	___	___	___	___
c. Framed instructions mounted in or near control panel.	___	___	X	X	___	___	___	___
d. Components properly labeled (on inside and outside of panel).	___	___	X	X	___	___	___	___
e. Control components piped and/or wired to each labeled terminal strip.	___	___	X	X	___	___	___	___
f. Control wiring and tubing labeled at all terminations, splices, and junctions.	___	___	X	X	___	___	___	___
g. Shielded wiring used on electronic sensors.	___	___	X	X	___	___	___	___
h. Air dryer installed as specified.	___	___	X	X	___	___	___	___
i. Water drain installed as specified.	___	___	X	X	___	___	___	___
Main Power and Control Air								
a. 110 volt AC power available to panel.	___	___	___	X	___	___	___	___
b. 138 kPa guage (20 psig) compressed air available to panel.	___	___	X	X	___	___	___	___
Testing, Commissioning, and Balancing								
a. Testing, Commissioning, and Balancing Report submitted.	___	___	X	___	___	___	___	___

Pre-commissioning Checklist - Single Zone Air Handling Unit

For Air Handling Unit: _____

Checklist Item	Q	M	E	T	C	D	O	U
Installation								
a. Vibration isolation devices installed.	___	___	X	X	X	___	___	___
b. Inspection and access doors are operable and sealed.	___	___	X	___	X	___	___	___
c. Casing undamaged.	___	___	X	X	X	___	___	___
d. Insulation undamaged.	___	___	X	X	X	___	___	___
e. Condensate drainage is unobstructed.	___	___	X	X	X	___	___	___
f. Fan belt adjusted.	___	___	X	___	X	___	___	___
g. Any damage to coil fins has been repaired.	___	___	X	___	X	___	___	___
h. Manufacturer's required maintenance clearance provided.	___	___	X	X	X	___	___	___
Electrical								
a. Power available to unit disconnect.	___	___	___	X	X	___	___	___
b. Power available to unit control panel.	___	___	___	X	___	___	___	___
c. Proper motor rotation verified.	___	___	___	___	X	___	___	___
d. Verify that power disconnect is located within sight of the unit it controls.	___	___	___	X	___	___	___	___
e. Power available to electric heating coil.	___	___	___	X	___	___	___	___
Coils								
a. Chilled water piping properly connected.	___	___	X	___	___	___	___	___
b. Chilled water piping pressure tested.	___	___	X	X	X	___	___	___
c. Hot water piping properly connected.	___	___	X	___	___	___	___	___
d. Hot water piping pressure tested.	___	___	X	X	___	___	___	___
e. Air vents installed on water coils with shutoff valves as specified.	___	___	X	X	X	___	___	___
f. Any damage to coil fins has been repaired.	___	___	X	___	X	___	___	___

Controls

a. Control valves/actuators properly installed.	___	___	X	___	___	___	___	___
b. Control valves/actuators operable.	___	___	X	___	___	___	___	___
c. Dampers/actuators properly installed.	___	___	X	___	___	___	___	___
d. Dampers/actuators operable.	___	___	X	___	___	___	___	___
e. Verify proper location and installation of thermostat.	___	___	X	___	___	___	___	___

Testing, Adjusting, and Balancing (TAB)

a. Construction filters removed and replaced.	___	___	X	___	X	___	___	___
b. TAB results +10%/-0% L/s shown on drawings.	___	___	X	___	X	___	___	___
c. TAB Report submitted.	___	___	X	___	X	___	___	___

APPENDIX B

FUNCTIONAL PERFORMANCE TESTS CHECKLISTS

Functional Performance Test Checklist - Pumps

For Pump: _____

Prior to performing this checklist, ensure that for closed loop systems, system is pressurized and the make-up water system is operational or, for open loop systems, that the sumps are filled to the proper level.

1. Activate pump start using control system commands (all possible combination, on/auto, etc.). ON_____ AUTO_____ OFF_____

a. Verify pressure drop across strainer:

Strainer inlet pressure _____ kPa (_____ psig)
Strainer outlet pressure _____ kPa (_____ psig)

b. Verify pump inlet/outlet pressure reading, compare to Testing, Adjusting, and Balancing (TAB) Report, pump design conditions, and pump manufacturer's performance.

	DESIGN	TAB	ACTUAL
Pump inlet pressure (kPa guage)	_____	_____	_____
Pump outlet pressure (kPa gauge)	_____	_____	_____

c. Operate pump at shutoff and at 100 percent of designed flow when all components are in full flow. Plot test readings on pump curve and compare results against readings taken from flow measuring devices.

	SHUTOFF	100 percent
Pump inlet pressure (kPa guage)	_____	_____
Pump outlet pressure	_____	_____
Pump flow rate (L/s)	_____	_____

d. Operate pump at shutoff and at minimum flow or when all components are in full by-pass. Plot test readings on pump curve and compare results against readings taken from flow measuring devices.

	SHUTOFF	100 percent
Pump inlet pressure (kPa guage)	_____	_____
Pump outlet pressure	_____	_____
Pump flow rate (L/s)	_____	_____

2. Verify motor amperage each phase and voltage phase to phase and phase to ground for both the full flow and the minimum flow conditions.

a. Full flow:

	PHASE 1	PHASE 2	PHASE 3
Amperage	_____	_____	_____
Voltage		_____	_____

Voltage	_____		
Voltage to ground	_____	_____	_____

b. Minimum flow:

	PHASE 1	PHASE 2	PHASE 3
Amperage	_____	_____	_____
Voltage	_____	_____	
Voltage	_____		
Voltage to ground	_____	_____	_____

3. Unusual vibration, noise, etc.

_____

_____

4. Certification: We the undersigned have witnessed the above functional performance tests and certify that the item tested has met the performance requirements in this section of the specifications.

	Signature and Date
Contractor's Chief Quality Control Representative	_____
Contractor's Mechanical Representative	_____
Contractor's Electrical Representative	_____
Contractor's Testing, Adjusting and Balancing Representative	_____
Contractor's Controls Representative	_____
Contracting Officer's Representative	_____
Using Agency's Representative	_____

Functional Performance Test Checklist - VAV Terminals

The Contracting officer will select VAV terminals to be spot-checked during the functional performance test. The number of terminals shall not exceed 10 percent.

1. Functional Performance Test: Contractor shall demonstrate operation of selected VAV boxes as per specifications including the following:

a. Cooling only VAV boxes:

(1) Verify VAV box response to room temperature set point adjustment. Turn thermostat to 5 degrees F above ambient and measure maximum air flow. Turn thermostat to 5 degrees F below ambient and measure minimum air flow.

Maximum flow [_____] L/s
Minimum flow [_____] L/s

(2) Check damper maximum/minimum flow settings.

Maximum flow setting [_____] L/s
Minimum flow setting [_____] L/s

b. Cooling with reheat VAV boxes:

(1) Verify VAV box response to room temperature set point adjustment. Turn thermostat to 3 degrees C above ambient and measure maximum air flow. Turn thermostat to 3 degrees C below ambient and measure minimum air flow.

Maximum flow [_____] L/s
Minimum flow [_____] L/s

(2) Check damper maximum/minimum flow settings.

Maximum flow setting [_____] L/s
Minimum flow setting [_____] L/s

Reheat coil operation range (full open to full closed) _____

2. Certification: We the undersigned have witnessed the above functional performance tests and certify that the item tested has met the performance requirements in this section of the specifications.

Signature and Date

Contractor's Chief Quality Control Representative _____

Contractor's Mechanical Representative _____

Contractor's Electrical Representative _____

Contractor's Testing, Adjusting and Balancing Representative _____

Contractor's Controls Representative _____

Contracting Officer's Representative _____

Using Agency's Representative _____

Functional Performance Test Checklist - Variable Volume Air Handling Unit

For Air Handling Unit: _____

Ensure that a slight negative pressure exists on inboard side of the outside air dampers throughout the operation of the dampers. Modulate OA, RA, and EA dampers from fully open to fully closed positions.

1. Functional Performance Test: Contractor shall verify operation of air handling unit as per specification including the following:

a. The following shall be verified when the supply fan operating supply and return fans operating mode is initiated:

(1) All dampers in normal position and fan inlet vanes modulate to maintain the required static pressure. _____

(2) All valves in normal position. _____

(3) System safeties allow start if safety conditions are met. _____

(4) VAV fan controller shall "soft-start" fan. _____

(5) Modulate all VAV boxes to minimum air flow and verify that the static pressure does not exceed the design static pressure Class shown. _____

b. Occupied mode of operation - economizer de-energized.

(1) Outside air damper at minimum position. _____

(2) Return air damper open. _____

(3) Relief air damper at minimum position closed. _____

(4) Chilled water control valve modulating to maintain leaving air temperature set point. _____

(5) Fan VAV controller receiving signal from duct static pressure sensor and modulating fan to maintain supply duct static pressure set point. _____

c. Occupied mode of operation - economizer energized.

(1) Outside air damper modulated to maintain mixed air temperature set point. _____

(2) Relief air damper modulates with outside air damper according to sequence of operation. _____

(3) Chilled water control valve modulating to maintain leaving air temperature set point. _____

(4) Hot water control valve modulating to maintain leaving air temperature set point. _____

(5) Fan VAV controller receiving signal from duct static pressure sensor and modulating fan to maintain supply duct static pressure set point. _____

d. Unoccupied mode of operation

(1) All dampers in normal position. _____

(2) Verify low limit space temperature is maintained as specified in sequence of operation. _____

e. The following shall be verified when the supply fan off supply and return fans off mode is initiated:

(1) All dampers in normal position. _____

(2) All valves in normal position. _____

(3) Fan de-energizes. _____

f. Verify the chilled water coil control valve operation by setting all VAV's to maximum and minimum cooling.

	Max cooling	Min cooling
Supply air volume (_____ L/s)	_____	_____
Supply air temp. (_____ degrees C)	_____	_____

g. Verify safety shut down initiated by smoke detectors. _____

h. Verify safety shut down initiated by low temperature protection thermostat. _____

2. Certification: We the undersigned have witnessed the above functional performance tests and certify that the item tested has met the performance requirements in this section of the specifications.

	Signature and Date
Contractor's Chief Quality Control Representative	_____
Contractor's Mechanical Representative	_____
Contractor's Electrical Representative	_____
Contractor's Testing, Adjusting and Balancing Representative	_____
Contractor's Controls Representative	_____
Contracting Officer's Representative	_____
Using Agency's Representative	_____

Functional Performance Test Checklist - Single Zone Air Handling Unit

For Air Handling Unit: _____

1. Functional Performance Test: Contractor shall verify operation of air handling unit as per specification including the following:

a. The following shall be verified when the supply fan operating supply and return fans operating mode is initiated:

(1) All dampers in normal position. _____

(2) All valves in normal position. _____

(3) System safeties allow start if safety conditions are met. _____

b. Occupied mode of operation - economizer de-energized.

(1) Outside air damper at minimum position. _____

(2) Return air damper open. _____

(3) Relief air damper at minimum position closed. _____

(4) Chilled water control valve modulating to maintain space cooling temperature set point. _____

(5) Hot water control valve modulating to maintain space heating temperature set point input from outside air temperature controller. _____

c. Occupied mode of operation - economizer energized.

(1) Outside air damper modulated to maintain mixed air temperature set point. _____

(2) Relief air damper modulates with outside air damper according to sequence of operation. _____

(3) Chilled water control valve modulating to maintain space cooling temperature set point. _____

d. Unoccupied mode of operation

(1) All dampers in normal position. _____

(2) Verify low limit space temperature is maintained as specified in sequence of operation. _____

e. The following shall be verified when the supply fan off supply and return fans off mode is initiated:

(1) All dampers in normal position. _____

(2) All valves in normal position. _____

(3) Fan de-energizes. _____

f. Verify cooling coil and heating coil operation by varying thermostat set point from cooling set point to heating set point and returning to cooling set point. _____

g. Verify safety shut down initiated by smoke detectors. _____

h. Verify safety shut down initiated by low temperature protection thermostat. _____

2. Certification: We the undersigned have witnessed the above functional performance tests and certify that the item tested has met the performance requirements in this section of the specifications.

	Signature and Date
Contractor's Chief Quality Control Representative	_____
Contractor's Mechanical Representative	_____
Contractor's Electrical Representative	_____
Contractor's Testing, Adjusting and Balancing Representative	_____
Contractor's Controls Representative	_____
Contracting Officer's Representative	_____
Using Agency's Representative	_____

Functional Performance Test Checklist - Packaged Air Cooled Chiller

For Chiller: _____

1. Functional Performance Test: Contractor shall demonstrate operation of chilled water system as per specifications including the following: Start building air handler to provide load for chiller. Activate controls system chiller start sequence as follows.

a. Start chilled water pump and establish chilled water flow. Verify chiller-chilled water proof-of-flow switch operation. _____

b. Verify control system energizes chiller start sequence. _____

c. Verify chiller senses chilled water temperature above set point and control system activates chiller start. _____

d. Verify functioning of "soft start" sequence. _____

e. Shut off air handling equipment to remove load on chilled water system. Verify chiller shutdown sequence is initiated and accomplished after load is removed. _____

f. Restart air handling equipment one minute after chiller shut down. Verify chiller restart sequence. _____

2. Verify chiller inlet/outlet pressure reading, compare to Testing, Adjusting, and Balancing (TAB) Report, chiller design conditions, and chiller manufacturer's performance data.

	DESIGN	TAB	ACTUAL
Chiller inlet pressure (kPa guage)	_____	_____	_____
Chiller outlet pressure (kPa gauge)	_____	_____	_____

3. Verify chiller amperage each phase and voltage phase-to-phase and phase-to-ground.

	PHASE 1	PHASE 2	PHASE 3
Amperage	_____	_____	_____
Voltage	_____	_____	
Voltage	_____		
Voltage to ground	_____	_____	_____

4. Record the following information:

Ambient dry bulb temperature _____ degrees C
Ambient wet bulb temperature _____ degrees C
Entering chilled water temperature _____degrees C
Leaving chilled water temperature _____ degrees C

5. Unusual vibration, noise, etc.

_____

_____

6. Certification: We the undersigned have witnessed the above functional performance tests and certify that the item tested has met the performance requirements in this section of the specifications.

	Signature and Date
Contractor's Chief Quality Control Representative	_____
Contractor's Mechanical Representative	_____
Contractor's Electrical Representative	_____
Contractor's Testing, Adjusting and Balancing Representative	_____
Contractor's Controls Representative	_____
Contracting Officer's Representative	_____
Using Agency's Representative	_____

Functional Performance Test Checklist - Hot Water Boiler

For Boiler: _____

1. Functional Performance Test: Contractor shall demonstrate operation of hot water system as per specifications including the following: Start building heating equipment to provide load for boiler. Activate controls system boiler start sequence as follows.

a. Start hot water pump and establish hot water flow. Verify boiler hot water proof-of-flow switch operation. _____

b. Verify control system energizes boiler start sequence. _____

c. Verify boiler senses hot water temperature below set point and control system activates boiler start. _____

d. Shut off building heating equipment to remove load on hot water system. Verify boiler shutdown sequence is initiated and accomplished after load is removed. _____

2. Verify boiler inlet/outlet pressure reading, compare to Test and Balance (TAB) Report, boiler design conditions, and boiler manufacturer's performance data.

	DESIGN	TAB	ACTUAL
Boiler inlet pressure (kPa gauge)	_____	_____	_____
Boiler outlet pressure (kPa gauge)	_____	_____	_____
Boiler flow rate (L/s)	_____	_____	_____
Flue-gas temperature at boiler outlet	_____	_____	
Percent carbon dioxide in flue-gas	_____	_____	
Draft at boiler flue-gas exit	_____	_____	
Draft or pressure in furnace	_____	_____	
Stack emission pollutants concentration	_____	_____	_____
Fuel type	_____	_____	_____
Combustion efficiency	_____	_____	_____

3. Record the following information:

4. Verify temperatures in item 3 are in accordance with the reset schedule. _____

5. Verify proper operation of boiler safeties. _____

6. Unusual vibration, noise, etc.

_____

_____

7. Visually check refractory for cracks or spalling and refractory and tubes for flame impingement. _____

8. Certification: We the undersigned have witnessed the above functional performance tests and certify that the item tested has met the performance requirements in this section of the specifications.

	Signature and Date
Contractor's Chief Quality Control Representative	_____
Contractor's Mechanical Representative	_____
Contractor's Electrical Representative	_____
Contractor's Testing, Adjusting and Balancing Representative	_____
Contractor's Controls Representative	_____
Contracting Officer's Representative	_____
Using Agency's Representative	_____

Functional Performance Test Checklist - Unit Heaters

1. Functional Performance Test: Contractor shall demonstrate operation of unit heaters as per specifications including the following:

a. Verify unit heater response to room temperature set point adjustment. Changes to be heating set point to heating set point minus 10 degrees and return to heating set point. _____

b. Check blower fan speed. _____rpm

c. Check heating mode inlet air temperature. _____ degrees C
Check heating mode inlet air temperature.

d. Check heating mode outlet air temperature. _____ degrees C
Check heating mode outlet air temperature.

2. Certification: We the undersigned have witnessed the above functional performance tests and certify that the item tested has met the performance requirements in this section of the specifications.

Signature and Date

Contractor's Chief Quality Control Representative _____

Contractor's Mechanical Representative _____

Contractor's Electrical Representative _____

Contractor's Testing, Adjusting and Balancing Representative _____

Contractor's Controls Representative _____

Contracting Officer's Representative _____

Using Agency's Representative _____

Functional Performance Test Checklist - HVAC Controls

For HVAC System: _____

The Contracting Officer will select HVAC control systems to undergo functional performance testing. The number of systems shall not exceed 2 10 10 percent.

1. Functional Performance Test: Contractor shall verify operation of HVAC controls by performing the following tests:

a. Verify that controller is maintaining the set point by manually measuring the controlled variable with a thermometer, sling psychrometer, inclined manometer, etc.

b. Verify sensor/controller combination by manually measuring the controlled medium. Take readings from control panel display and compare readings taken manually. Record all readings.

Sensor _____
Manual measurement _____
Panel reading value _____

c. Verify system stability by changing the controller set point as follows:

(1) Air temperature - 10 degrees F

(2) Water temperature - 10 degrees F

(3) Static pressure - 10 percent of set point

(4) Relative humidity - percent (RH)

The control system shall be observed for 10 minutes after the change in set point. Instability or excessive hunting will be unacceptable.

d. Verify interlock with other HVAC controls.

e. Verify interlock with fire alarm control panel.

f. Verify interlock with EMCS.

g. Change controller set point 10 percent with EMCS and verify correct response.

2. Verify that operation of control system conforms to that specified in the sequence of operation.

3. Certification: We the undersigned have witnessed the above functional performance tests and certify that the item tested has met the performance requirements in this section of the specifications.

Signature and Date

Contractor's Chief Quality Control Representative _____

Contractor's Mechanical Representative _____

Contractor's Electrical Representative _____

Contractor's Testing, Adjusting and Balancing Representative _____

Contractor's Controls Representative _____

Contractor's Officer's Representative _____

Using Agency's Representative _____

End of Section

SECTION 16370

ELECTRICAL DISTRIBUTION SYSTEM, AERIAL
01/93

PART 1 GENERAL

1.1 REFERENCES

The publications listed below form a part of this specification to the extent referenced. The publications are referred to in the text by basic designation only.

AMERICAN NATIONAL STANDARDS INSTITUTE (ANSI)

ANSI C29.2	(1992) Insulators - Wet-Process Porcelain and Toughened Glass - Suspension Type
ANSI C29.5	(1984; R 1991) Wet-Process Porcelain Insulators - Low- and Medium-Voltage Types
ANSI C29.6	(1984) Wet-Process Porcelain Insulators - High-Voltage Pin Type
ANSI C29.8	(1985) Wet-Process Porcelain Insulators - Apparatus, Cap and Pin Type
ANSI C29.9	(1983) Wet-Process Porcelain Insulators - Apparatus, Post-Type
ANSI C135.1	(1979) Galvanized Steel Bolts and Nuts for Overhead Line Construction
ANSI C135.2	(1987) Threaded Zinc-Coated Ferrous Strand-Eye Anchor Rods and Nuts for Overhead Line Construction
ANSI C135.4	(1987) Zinc-Coated Ferrous Eyebolts and Nuts for Overhead Line Construction
ANSI C135.14	(1979) Staples with Rolled or Slash Points for Overhead Line Construction
ANSI C135.17	(1988) Insulator Pins with Lead Threads for Overhead Line Construction Galvanized Ferrous Bolt-Type
ANSI C135.22	(1988) Galvanized Ferrous Pole-Top Insulator Pins with Lead Threads for Overhead Line Construction
ANSI C135.30	(1988) Zinc-Coated Ferrous Ground Rods for Overhead or Underground Line Construction
ANSI C135.33	(1988) Crossarm Gains, Galvanized Ferrous

ANSI O5.1	(1992) Specifications and Dimensions for Wood Poles

AMERICAN SOCIETY FOR TESTING AND MATERIALS (ASTM)

ASTM A 123	(1989a) Zinc (Hot-Dip Galvanized) Coatings on Iron and Steel Products
ASTM A 153	(1996) Zinc Coating (Hot-Dip) on Iron and Steel Hardware
ASTM A 475	(1995) Zinc-Coated Steel Wire Strand
ASTM A 575	(1989) Steel Bars, Carbon, Merchant Quality, M-Grades
ASTM A 576	(1990b) Steel Bars, Carbon, Hot-Wrought, Special Quality
ASTM B 8	(1993) Concentric-Lay-Stranded Copper Conductors, Hard, Medium-Hard, or Soft
ASTM B 228	(1993) Concentric-Lay-Stranded Copper-Clad Steel Conductors
ASTM B 416	(1993) Concentric-Lay-Stranded Aluminum-Clad Steel Conductors

AMERICAN WOOD-PRESERVERS' ASSOCIATION (AWPA)

AWPA C4	(1995) Poles - Preservative Treatment by Pressure Processes
AWPA C25	(1995) Sawn Crossarms - Preservative Treatment by Pressure Processes
AWPA P1/P13	(1995) Standard for Coal Tar Creosote for Land and Fresh Water and Marine (Coastal Water Use)
AWPA P5	(1995) Standards for Waterborne Preservatives
AWPA P8	(1995) Standards for Oil-Borne Preservatives
AWPA P9	(1992) Standards for Solvents and Formulations for Organic Preservative Systems

INSTITUTE OF ELECTRICAL AND ELECTRONIC ENGINEERS (IEEE)

IEEE C2	(1997) National Electrical Safety Code
IEEE C57.12.00	(1993) IEEE Standard General Requirements for Liquid-Immersed Distribution, Power, and Regulating Transformers

IEEE C57.19.00	(1991) IEEE Standard General Requirements and Test Procedures for Outdoor Power Apparatus Bushings
IEEE C57.19.01	(1991) IEEE Standard Performance Characteristics and Dimensions for Outdoor Apparatus Bushings
IEEE Std 100	(1992) IEEE Standard Dictionary of Electrical and Electronics Terms

NATIONAL ELECTRICAL MANUFACTURERS ASSOCIATION (NEMA)

NEMA HV 2	(1984; R 1991) Application Guide for Ceramic Suspension Insulators

NATIONAL FIRE PROTECTION ASSOCIATION (NFPA)

NFPA 70	(1996) National Electrical Code

RURAL ELECTRIFICATION ADMINISTRATION (REA)

REA Bulletin 1728H-701	(1993) REA Specification for Wood Crossarms (Solid and Laminated), Transmission Timbers and Pole Keys

UNDERWRITERS LABORATORIES (UL)

UL 467	(1993; Rev thru Aug 1996) Grounding and Bonding Equipment
UL 486A	(1991; Rev Oct 1991) Wire Connectors and Soldering Lugs for Use with Copper Conductors
UL 486B	(1991; Rev thru Oct 1996) Wire Connectors for Use with Aluminum Conductors

1.2 GENERAL REQUIREMENTS

1.2.1 Terminology

Terminology used in this specification is as defined in IEEE Std 100.

1.2.2 Service Conditions

Items provided under this section shall be specifically suitable for the following service conditions.

a. Frequency 60.

b. Seismic Zone 3.

1.3 SUBMITTALS

Government approval is required for submittals with a "GA" designation; submittals having an "FIO" designation are for information only. The

following shall be submitted in accordance with Section 01300 SUBMITTAL PROCEDURES:

SD-01 Data

Manufacturer's Catalog; FIO.

Catalog cuts, brochures, circulars, specifications, product data, and printed information in sufficient detail and scope to verify compliance with the requirements of the contract documents.

Material, Equipment, and Fixture Lists; FIO.

A complete itemized listing of equipment and materials proposed for incorporation into the work. Each entry shall include the item number, the quantity of items proposed, and the name of the manufacturer of the item.

Installation Procedures; FIO.

As a minimum, installation procedures for regulators, transformers and reclosers. Procedures shall include diagrams, instructions, and precautions required to install, adjust, calibrate, and test the devices and equipment.

1.4 DELIVERY, STORAGE, AND HANDLING

Devices and equipment shall be visually inspected by the Contractor when received and prior to acceptance from conveyance. Stored items shall be protected from the environment in accordance with the manufacturer's published instructions. Damaged items shall be replaced. Oil filled transformers and switches shall be stored in accordance with the manufacturer's requirements. Wood poles held in storage for more than 2 weeks shall be stored in accordance with ANSI O5.1. Handling of wood poles shall be in accordance with ANSI O5.1, except that pointed tools capable of producing indentations more than inch in depth shall not be used. Metal poles shall be handled and stored in accordance with the manufacturer's instructions.

PART 2 PRODUCTS

2.1 GENERAL REQUIREMENTS

Products shall conform to the following requirements. Items of the same classification shall be identical including equipment, assemblies, parts, and components.

2.2 STANDARD PRODUCT

Material and equipment shall be the standard product of a manufacturer regularly engaged in the manufacture of the product and shall essentially duplicate items that have been in satisfactory use for at least 2 years prior to bid opening.

2.3 NAMEPLATES

2.3.1 General

Each major component shall have the manufacturer's name, address, type or style, model or serial number, and catalog number on a nameplate securely attached to the equipment. Equipment containing liquid-dielectrics shall have the type of dielectric on the nameplate. Nameplates shall be made of noncorrosive metal. As a minimum, nameplates shall be provided for transformers, regulators, circuit breakers, capacitors, meters and switches.

2.3.2 Liquid-Filled Transformer Nameplates

Power transformers shall be provided in accordance with IEEE C57.12.00. Nameplates shall indicate the number of liters and composition of liquid-dielectric, and shall be permanently marked with a statement that the transformer dielectric to be supplied is non-polychlorinated biphenyl. If transformer nameplate is not so marked, the Contractor shall furnish manufacturer's certification for each transformer that the dielectric in non-PCB classified, with less than 50 ppm PCb content in accordance with paragraph LIQUID DIELECTRICS. Certifications shall be related to serial numbers on transformer nameplates. Transformer dielectric exceeding the 50 ppm PCB content or transformers without certification will be considered as PCB insulated and will not be accepted.

2.4 CORROSION PROTECTION

2.4.1 Ferrous Metal Materials

2.4.1.1 Hardware

Ferrous metal hardware shall be hot-dip galvanized in accordance with ASTM A 153 and ASTM A 123.

2.5 CONDUCTORS, CONNECTORS, AND SPLICES

2.5.1 Connectors and Splices

Connectors and splices shall be of copper alloys for copper conductors, aluminum alloys for aluminum-composition conductors, and a type designed to minimize galvanic corrosion for copper to aluminum-composition conductors. Aluminum-composition and aluminum-composition to copper shall comply with UL 486B, and copper-to-copper shall comply with UL 486A.

2.6 MEDIUM-VOLTAGE LINES

2.6.1 Bare Medium-Voltage Lines

Bare medium-voltage line conductors shall be aluminum-conductor-steel-reinforced, ACSR. Conductor types shall not be mixed on any project, unless specifically indicated. Conductors larger than No. 2 AWG shall be stranded.

2.7 POLES AND HARDWARE

Poles shall be of lengths and classes indicated.

2.7.1 Wood Poles

Wood poles shall comply with ANSI O5.1, and shall be pressure treated in accordance with AWPA C4, with creosote conforming to AWPA P1/P13or with oil-borne preservatives and petroleum conforming to AWPA P8 and AWPA P9, respectively, and waterborne preservatives conforming to AWPA P5. Waterborne preservatives shall be either chromated or ammoniacal copper arsenate. Any species listed in ANSI O5.1 for which a preservative treatment is not specified in AWPA C4, shall not be used; northern white cedar, if treated as specified for western red cedar, and western fir, if treated as specified for Douglas fir, may be used. Wood poles shall have pole markings located approximately 3 m from pole butts for poles 15.2 m (50 feet) or less in length, and 4 m from the pole butts for poles longer than 16.8 m (55 feet) in length. Poles shall be machine trimmed by turning smooth full length, and shall be roofed, gained, and bored prior to pressure treatment. Where poles are not provided with factory-cut gains, metal gain plates shall be provided.

2.7.2 Pole Line Hardware

Zinc-coated hardware shall comply with ANSI C135.1, ANSI C135.2, ANSI C135.4, ANSI C135.14, ANSI C135.17, ANSI C135.22, and ANSI C135.33. Steel hardware shall comply with ASTM A 575 and ASTM A 576. Hardware shall be hot-dip galvanized in accordance with ASTM A 153. Pole-line hardware shall be hot-dip galvanized steel. Washers shall be installed under boltheads and nuts on wood surfaces and elsewhere as required. Washers used on through-bolts and double-arming bolts shall be approximately 57.2 mm square and 4.8 mm (3/16 inch) thick. The diameter of holes in washers shall be the correct standard size for the bolt on which a washer is used. Washers for use under heads of carriage-bolts shall be of the proper size to fit over square shanks of bolts. Eye bolts, bolt eyes, eyenuts, strain-load plates, lag screws, guy clamps, fasteners, hooks, shims, and clevises shall be used wherever required to support and to protect poles, brackets, crossarms, guy wires, and insulators.

2.7.3 Guy Assemblies

Guy assemblies shall be aluminum-clad steel in accordance with ASTM B 416 copper-clad steel in accordance with ASTM B 228 or zinc-coated steel in accordance with ASTM A 475. Guy assemblies, including insulators and attachments, shall provide a strength exceeding the required guy strength. Three-eye thimbles shall be provided on anchor rods to permit attachment of individual primary, secondary, and communication down guys. Anchors shall provide adequate strength to support all loads. Guy strand shall be 7 strand. Guy material shall be Class 30 HS copper-clad steel Class A zinc-coated-steel utilities grade, with a minimum breaking strength , except where two or more guys are used to provide the required strength. Guy rods shall be not less than 2.4 m (8 feet) in length by 19.1 mm (3/4 inch) in diameter.

2.8 INSULATORS

Insulators shall comply with NEMA HV 2 for general requirements. Suspension insulators shall be used at corners, angles, dead-ends, other areas where line insulators do not provide adequate strength, and as indicated. Mechanical strength of suspension insulators and hardware shall exceed the rated breaking strength of the attached conductors.

2.8.1 Medium-Voltage Line Insulators

Medium-voltage line insulators shall comply with ANSI C29.2, ANSI C29.5, and ANSI C29.6, and as applicable. Ratings shall not be lower than the ANSI classes indicated in TABLE I. Horizontal line-post insulators shall be used for armless construction and shall have the same mechanical and electrical ratings as vertical line-post insulators for the ANSI class indicated, but shall be modified to be suitable for horizontal installation. Where line-post insulators are used for angles greater than 15 degrees, clamp-top fittings shall be provided as well as for other locations shown. Conductor clamps for use with clamp-top, line-post insulators shall be hot-dip galvanized malleable iron for copper conductors and aluminum alloy for aluminum-composition conductors. Either line-post or pin insulators may be used for crossarm construction. Pin insulators for use on voltages in excess of 6 kV phase-to-phase shall be radio-interference-freed or else line-post insulators shall be used.

TABLE I

MINIMUM ANSI RATING OF MEDIUM-VOLTAGE INSULATORS BY CLASS

Voltage Level	Line-Post	Pin	Suspension
Up to 5 kV	57-1 or 11	55-3	One 52-1
	57-1 or 11	55-5	Two 52-1
6 kV to 15 kV	57-1 or 11	55-5	Two 52-2
	57-2 or 12	56-3	Two 52-3 or 4
16 kV to 25 kV	57-2 or 12	56-3	Two 52-3 or 4
	57-3 or 13	56-4	Three 52-3 or 4
26 kV to 35 kV	57-3 or 13	56-4	Three 52-3 or 4
	57-4 or 14	56-5	Four 52-3 or 4

2.8.2 Apparatus Insulators

Apparatus insulators shall comply with IEEE C57.19.00, IEEE C57.19.01, ANSI C29.8, and ANSI C29.9 as applicable.

2.9 CROSSARM ASSEMBLIES

2.9.1 Crossarms

Crossarms shall comply with REA Bulletin 1728H-701 and shall be solid wood, distribution type, except cross-sectional area with pressure treatment conforming to AWPA C25, and a 6.4 mm (1/4 inch), 45 degree chamfer on all top edges. Cross-sectional area minimum dimensions shall be 108.0 mm (4-1/4 inches) in height by 82.6 mm (3-1/4 inches) in depth in accordance with IEEE C2 for Grade B construction. Crossarms shall be 2.4 m (8 feet) in length, except that 3.1 m (10 foot) crossarms shall be used for crossarm-mounted banked single-phase transformers or elsewhere as indicated. Crossarms shall be machined, chamfered, trimmed, and bored for stud and bolt holes before pressure treatment. Factory drilling shall be provided for pole and brace mounting, for four pin or four vertical line-post insulators, and for four suspension insulators, except where otherwise indicated or required.

Drilling shall provide required climbing space and wire clearances. Crossarms shall be straight and free of twists to within 2.5 mm per 304.8 mm (1/10 inch per foot) of length. Bend or twist shall be in one direction only.

2.9.2 Crossarm Gains

Crossarm gains shall comply with ANSI C135.33.

2.10 GROUNDING AND BONDING

2.10.1 Driven Ground Rods

Ground rods shall be of copper-clad steel conforming to UL 467 zinc-coated steel conforming to ANSI C135.30 in length of the sectional type driven full length into the earth.

2.10.2 Grounding Conductors

Grounding conductors shall be bare, except where installed in conduit with associated phase conductors. Bare conductors shall be ASTM B 8 soft-drawn unless otherwise indicated. Aluminum is not acceptable.

PART 3 EXECUTION

3.1 GENERAL INSTALLATION REQUIREMENTS

Equipment and devices shall be installed and energized in accordance with the manufacturer's published instructions. Circuits installed in conduits or underground and splices and terminations for medium-voltage cable shall conform to the requirements of Section 16375 ELECTRICAL DISTRIBUTION SYSTEM, UNDERGROUND. Secondary circuits installed in conduit on poles shall conform to the requirements of Section 16415 ELECTRICAL WORK, INTERIOR.

3.1.1 Conformance to Codes

The installation shall comply with the requirements and recommendations of IEEE C2 for medium loading districts, Grade B construction. No reduction in clearance shall be made. The installation shall also comply with the applicable parts of NFPA 70.

3.1.2 Verification of Dimensions

The Contractor shall become familiar with details of the work, shall verify dimensions in the field, and shall notify the Contracting Officer of any discrepancy before performing any work.

3.1.3 Disposal of Liquid Dielectrics

PCB-contaminated dielectric shall be marked as PCB and transported to and incinerated by an approved EPA waste disposal facility. The Contractor shall furnish certification of proper disposal. Contaminated dielectric shall not be diluted to lower the level of contamination.

3.2 POLE INSTALLATION

3.2.1 Wood Pole Setting

Wood Pole Setting: Wood poles shall be set straight and firm. In normal firm ground, minimum pole-setting depths shall be as listed in Table II. In rocky or swampy ground, pole-setting depths shall be decreased or increased as shown respectively in accordance with the local utility's published standards and as approved. In swampy or soft ground, a bog shoe shall be used where support for a pole is required. Poles in straight runs shall be in a straight line. Curved poles shall be placed with curvatures in the direction of the pole line. Poles shall be set to maintain as even a grade as practicable. When the average ground run is level, consecutive poles shall not vary more than 1.5 m in height. When the ground is uneven, poles differing in length shall be kept to a minimum by locating poles to avoid the highest and lowest ground points. If it becomes necessary to shorten a pole, a piece shall be sawed off the top end and roofed. If any pole is shortened after treatment, the shortened end of the pole shall be given an application of hot preservative. Where poles are set on hilly terrain, along edges of cuts or embankments, or where soil may be washed out, special precautions shall be taken to ensure durable pole foundations, and the setting depth shall be measured from the lower side of the pole. Holes shall be dug large enough to permit proper use of tampers to the full depth of a hole. Earth shall be placed into the hole in 300 mm maximum layers, then thoroughly tamped before the next layer is placed. Surplus earth shall be placed around each pole in a conical shape and packed tightly to drain water away from poles.

TABLE II

MINIMUM POLE-SETTING DEPTH (METERS)

Length Overall Meters	Straight Lines	Curves, Corners, and Points of Extra Strain
6.1	1.5	1.5
7.6	1.7	1.7
9.2	1.7	1.7
10.7	1.8	1.8
12.2	1.8	1.8
13.7	2.0	2.1
15.2	2.1	2.3
16.7	2.3	2.5
18.3	2.5	2.6
19.8	2.6	2.6
21.3	2.8	2.9
22.9	2.9	3.0
24.4	3.0	3.2
25.9	3.2	3.3
27.4	3.3	3.5
28.9	3.5	3.7
30.5	3.7	3.8

3.3 CROSSARM MOUNTING

Crossarms shall be bolted to poles with 15.9 mm (5/8 inch) through-bolts with square washers at each end. Bolts shall extend not less than 3 mm nor more than 50 mm beyond nuts. On single crossarm construction, the bolt head shall be installed on the crossarm side of the pole. Wood crossarm braces shall be provided on crossarms. Flat braces may be provided for 2.4 m (8 foot) crossarms and shall be 6.4 by 31.8 mm (1/4 by 1-1/4 inches), not less than 700 mm (28 inches) in length. Flat braces shall be bolted to arms with 9.5 mm (3/8 inch) carriage bolts with round or square washers between boltheads and crossarms, and secured to poles with 50.8 by 101.6 mm (1/2 by 4 inch) lag screws after crossarms are leveled and aligned. Angle braces are required for 3.1 m (10 foot) crossarms and shall be 1.5 m (60 inch) span by 457.2 mm (18 inch) drop formed in one piece from 38.1 by 38.1 by 4.8 mm (1-1/2 by 1-1/2 by 3/16 inch) angle. Angle braces shall be bolted to crossarms with 50.8 mm (1/2 inch) bolts with round or square washers between boltheads and crossarms, and secured to poles with 15.9 mm (5/8 inch) through-bolts. Double crossarms shall be securely held in position by means of 15.9 mm (5/8 inch) double-arming bolts. Each double-arming bolt shall be equipped with four nuts and four square washers.

3.3.1 Line Arms and Buck Arms

Line arms and buck arms shall be set at right angles to lines for straight runs and for angles 45 degrees and greater; and line arms shall bisect angles of turns of less than 45 degrees. Dead-end assemblies shall be used for turns where shown. Buckarms shall be installed, as shown, at corners and junction poles.

3.3.2 Equipment Arms

Equipment arms shall be set parallel or at right angles to lines as required to provide climbing space. Equipment arms shall be located below line construction to provide necessary wire and equipment clearances.

3.4 GUY INSTALLATION

Guys shall be provided where shown, with loads and strengths as indicated, and wherever conductor tensions are not balanced, such as at angles, corners, and dead-ends. Where a single guy will not provide the required strength, two or more guys shall be provided. Where guys are wrapped around poles, at least two guy hooks shall be provided and pole shims shall be provided where guy tension exceeds 27 kN (6000 pounds). Guy clamps 152.4 mm (6 inches) in length with three 15.9 mm (5/8 inch) bolts, or offset-type guy clamps, or approved guy grips shall be provided at each guy terminal. Guy-strain insulators shall be provided in each guy for wood poles. Multiple-helix screw anchors shall be provided in marshy ground; rock anchors shall be installed in rock at right angles to guys, elsewhere anchors shall be of an expanding type, except that power installed screw anchors of equivalent holding power are acceptable. A half-round yellow polyvinyl, fiberglass, or other suitable plastic guy marker, not less than 2.4 m (8 feet) in length, shall be provided at the anchor end of each guy shown, securely clamped to the guy or anchor at the bottom and top of the marker. Holding capacities for down guys shall be based on a lead angle of as indicated.

3.5 CONDUCTOR INSTALLATION

3.5.1 Line Conductors

Unless otherwise indicated, conductors shall be installed in accordance with manufacturer's approved tables of sags and tensions. Proper care shall be taken in handling and stringing conductors to avoid abrasions, sharp bends, cuts, kinks, or any possibility of damage to insulation or conductors. Conductors shall be paid out with the free end of conductors fixed and cable reels portable, except where terrain or obstructions make this method unfeasible. Bend radius for any insulated conductor shall not be less than the applicable NEMA specification recommendation. Conductors shall not be drawn over rough or rocky ground, nor around sharp bends. When installed by machine power, conductors shall be drawn from a mounted reel through stringing sheaves in straight lines clear of obstructions. Initial sag and tension shall be checked by the Contractor, in accordance with the manufacturer's approved sag and tension charts, within an elapsed time after installation as recommended by the manufacturer.

3.5.2 Connectors and Splices

Connectors and splices shall be mechanically and electrically secure under tension and shall be of the nonbolted compression type. The tensile strength of any splice shall be not less than the rated breaking strength of the conductor. Splice materials, sleeves, fittings, and connectors shall be noncorrosive and shall not adversely affect conductors. Aluminum-composition conductors shall be wire brushed and an oxide inhibiter applied before making a compression connection. Connectors which are factory-filled with an inhibiter are acceptable. Inhibiters and compression tools shall be of types recommended by the connector manufacturer. Primary line apparatus taps shall be by means of hot line clamps attached to compression type bail clamps (stirrups). Low-voltage connectors for copper conductors shall be of the solderless pressure type. Noninsulated connectors shall be smoothly taped to provide a waterproof insulation equivalent to the original insulation, when installed on insulated conductors. On overhead connections of aluminum and copper, the aluminum shall be installed above the copper.

3.5.3 Conductor-To-Insulator Attachments

Conductors shall be attached to insulators by means of clamps, shoes or tie wires, in accordance with the type of insulator. For insulators requiring conductor tie-wire attachments, tie-wire sizes shall be as indicated in TABLE II.

TABLE II

TIE-WIRE REQUIREMENTS

CONDUCTOR Copper (AWG)	TIE WIRE Soft-Drawn Copper (AWG)
6	8
4 and 2	6
1 through 3/0	4
4/0 and larger	2

AAC, AAAC, or ACSR (AWG)	AAAC OR AAC (AWG)
Any size	6 or 4

3.5.4 Armor Rods

Armor rods shall be provided for AAC, AAAC, and ACSR conductors. Armor rods shall be installed at supports, except armor rods will not be required at primary dead-end assemblies if aluminum or aluminum-lined zinc-coated steel clamps are used. Lengths and methods of fastening armor rods shall be in accordance with the manufacturer's recommendations.For span lengths of 61 m or more, preformed round armor rods shall be used.

3.6 CONNECTIONS TO UTILITY LINES

The Contractor shall coordinate the work with the Contracting Officer and shall provide for final connections to the installation electric lines.

3.7 CONNECTIONS BETWEEN AERIAL AND UNDERGROUND SYSTEMS

Connections between aerial and underground systems shall be made as shown. Underground cables shall be extended up poles in guards conduit to cable terminations. Conduits shall be secured to poles by conduit supports two-hole galvanized steel pipe straps spaced not more than 3 m apart and with one support not more than 300 mm from any bend or termination. Cables shall be supported by devices separate from the conduit or guard, near their point of exit from the riser conduit or guard. Cables guards shall be secured in accordance with the manufacturers published procedure. Risers shall be equipped with bushings to protect cables. Silicone rubber terminations with high "K" stress relief shall be used to terminate medium-voltage multiple-conductor cable.

3.8 GROUNDING

Noncurrent-carrying metal parts of equipment and conductor assemblies, such as luminaires, medium-voltage cable terminations and messengers, metal poles, operating mechanisms of pole top switches, panel enclosures, transformers, capacitors, recloser frames (cases) and other noncurrent-carrying metal items shall be grounded. Additional grounding of equipment, and surge arrester grounding systems shall be installed at poles where indicated.

3.8.1 Grounding Electrodes

Grounding electrodes shall be installed as follows:

a. Driven rod electrodes - Unless otherwise indicated, ground rods shall be located approximately 900 mm out from base of the pole and shall be driven into the earth until the tops of the rods are approximately 300 mm below finished grade. Multiple rods shall be evenly spaced at least 3 m apart and connected together 600 mm below grade with a minimum No. 6 bare copper conductor.

b. Pole butt electrodes - Pole butt electrodes shall be installed where indicated, except that this method shall not be the sole grounding electrode at transformer locations. The pole butt

electrode shall consist of a coil of at least 4 m of minimum No. 6 bare copper conductor stapled to the butt of the pole.

c. Plate electrodes - Plate electrodes shall be installed in accordance with the manufacturer's instructions and IEEE C2 and NFPA 70.

3.8.2 Grounding and Bonding Connections

Connections above grade shall be made by the fusion-welding process or with bolted solderless connectors in compliance with UL 467, and those below grade shall be made by a fusion-welding process. Where grounding conductors are connected to aluminum-composition conductors, specially treated or lined copper-to-aluminum connectors suitable for this purpose shall be used.

3.8.3 Grounding Electrode Conductors

On multi-grounded circuits, as defined in IEEE C2, provide a single continuous vertical grounding electrode conductor. Neutrals, surge arresters, and equipment grounding conductors shall be bonded to this conductor. For single grounded or ungrounded systems, provide a grounding conductor for the surge arrester and equipment grounding conductors and a separate grounding conductor for the secondary neutrals. Grounding electrode conductors shall be sized as shown. Grounding electrode conductors shall be stapled to wood poles at intervals not exceeding 600 mm.On metal poles, a preformed galvanized steel strap, 15.9 mm (5/8 inch) wide by 0.853 (22 gauge) minimum by length, secured by a preformed locking method standard with the manufacturer, shall be used to support a grounding electrode conductor installation on the pole and spaced at intervals not exceeding 1.5 m with one band not more than 75 mm from each end of the vertical grounding electrode conductor. Bends greater than 45 degrees in grounding electrode conductor are not permitted.

3.9 FIELD TESTING

3.9.1 Safety

The Contractor shall provide and use safety devices such as rubber gloves, protective barriers, and danger signs to protect and warn personnel in the test vicinity. The Contractor shall replace any devices or equipment which are damaged due to improper test procedures or handling.

3.9.2 Sag and Tension Test

The Contracting Officer shall be given prior notice of the time schedule for stringing conductors or cables serving overhead medium-voltage circuits and reserves the right to witness the procedures used for ascertaining that initial stringing sags and tensions are in compliance with requirements for the applicable loading district and cable weight.

3.9.3 Pre-Energization Services

The following services shall be performed on the equipment listed below. These services shall be performed subsequent to testing but prior to the initial energization. The equipment shall be inspected to insure that installation is in compliance with the recommendations of the manufacturer and as shown on the detail drawings. Terminations of conductors at major

equipment shall be inspected to ensure the adequacy of connections. Bare and insulated conductors between such terminations shall be inspected to detect possible damage during installation. If factory tests were not performed on completed assemblies, tests shall be performed after the installation of completed assemblies. Components shall be inspected for damage caused during installation or shipment and to ensure that packaging materials have been removed. Components capable of being both manually and electrically operated shall be operated manually prior to the first electrical operation. Components capable of being calibrated, adjusted, and tested shall be calibrated, adjusted, and tested in accordance with the instructions of the equipment manufacturer.

3.10 ACCEPTANCE

Final acceptance of the facility will not be given until the Contractor has successfully completed all tests and after all defects in installation, material or operation have been corrected.

End of Section

SECTION 16375

ELECTRICAL DISTRIBUTION SYSTEM, UNDERGROUND
11/92

PART 1 GENERAL

1.1 REFERENCES

The publications listed below form a part of this specification to the extent referenced. The publications are referred to in the text by basic designation only.

AMERICAN NATIONAL STANDARDS INSTITUTE (ANSI)

ANSI C12.1	(1995) Code for Electricity Metering
ANSI C12.4	(1984; R 1990) Mechanical Demand Registers
ANSI C12.10	(1987) Electromechanical Watthour Meters
ANSI C12.11	(1987; R 1993) Instrument Transformers for Revenue Metering, 10 kV BIL through 350 kV BIL (0.6 kV NSV through 69 kV NSV)
ANSI C29.1	(1988) Electrical Power Insulators - Test Methods
ANSI C37.121	(1989) Switchgear, Unit Substations Requirements
ANSI C57.12.13	(1982) Conformance Requirements for Liquid-Filled Transformers Used in Unit Installations, Including Unit Substations
ANSI C57.12.27	(1982) Conformance Requirements for Liquid-Filled Distribution Transformers Used in Pad-Mounted Installations, Including Unit Substations
ANSI C80.1	(1990) Rigid Steel Conduit - Zinc Coated
ANSI C119.1	(1986) Sealed Insulated Underground Connector Systems Rated 600 Volts
ANSI O5.1	(1992) Specifications and Dimensions for Wood Poles

AMERICAN SOCIETY FOR TESTING AND MATERIALS (ASTM)

ASTM A 48	(1994a) Gray Iron Castings
ASTM A 123	(1989a) Zinc (Hot-Dip Galvanized) Coatings on Iron and Steel Products

ASTM A 153	(1996) Zinc Coating (Hot-Dip) on Iron and Steel Hardware
ASTM B 8	(1993) Concentric-Lay-Stranded Copper Conductors, Hard, Medium-Hard, or Soft
ASTM B 117	(1994) Operating Salt Spray (Fog) Testing Apparatus
ASTM C 478	(1994) Precast Reinforced Concrete Manhole Sections
ASTM D 923	(1991) Sampling Electrical Insulating Liquids
ASTM D 1654	(1992) Evaluation of Painted or Coated Specimens Subjected to Corrosive Environments
ASTM D 4059	(1991) Analysis of Polychlorinated Biphenyls in Insulating Liquids by Gas Chromatography
ASTM F 883	(1990) Padlocks

ASSOCIATION OF EDISON ILLUMINATING COMPANIES (AEIC)

AEIC CS5	(1994) Specifications for Cross-linked Polyethylene Insulated Shielded Power Cables Rated 5 Through 46 kV
AEIC CS6	(1987; Rev Mar 1989) Ethylene Propylene Rubber Insulated Shielded Power Cables Rated 5 Through 69 kV

FACTORY MUTUAL ENGINEERING AND RESEARCH (FM)

FM P7825	(1995; Supple I; Supple II; Supple III) Approval Guide

INSTITUTE OF ELECTRICAL AND ELECTRONICS ENGINEERS (IEEE)

IEEE C2	(1997) National Electrical Safety Code
IEEE C37.20.1	(1993) Metal-Enclosed Low-Voltage Power Circuit-Breaker Switchgear
IEEE C37.20.2	(1993; C37.20.2b) Metal-Clad and Station-Type Cubicle Switchgear
IEEE C37.20.3	(1987) Metal-Enclosed Interrupter Switchgear
IEEE C37.30	(1992) Definitions and Requirements for High-Voltage Air Switches, Insulators, and Bus Supports
IEEE C37.34	(1994) Test Code for High-Voltage Air Switches

IEEE C37.41	(1994) Design Tests for High-Voltage Fuses, Distribution Enclosed Single-Pole Air Switches, Fuse Disconnecting Switches, and Accessories
IEEE C57.12.00	(1993) IEEE Standard General Requirements for Liquid-Immersed Distribution, Power, and Regulating Transformers
IEEE C57.13	(1993) Instrument Transformers
IEEE C57.98	(1993) Guide for Transformer Impulse Tests
IEEE C62.1	(1989; R 1994) Surge Arresters for ac Power Circuits
IEEE C62.2	(1987; R 1994) Guide for the Application of Gapped Silicon-Carbide Surge Arresters for Alternating Current Systems
IEEE C62.11	(1993) IEEE Standard Metal-Oxide Surge Arresters for AC Power Circuits
IEEE Std 48	(1996) Standard Test Procedures and Requirements for Alternating-Current Cable Terminations 2.5 kV through 765 kV
IEEE Std 81	(1983) Guide for Measuring Earth Resistivity, Ground Impedance, and Earth Surface Potentials of a Ground System (Part 1)
IEEE Std 100	(1992) IEEE Standard Dictionary of Electrical and Electronics Terms
IEEE Std 386	(1995) Separable Insulated Connector Systems for Power Distribution Systems Above 600V
IEEE Std 404	(1993) Cable Joints for Use with Extruded Dielectric Cable Rated 5000 V through 46 000 V and Cable Joints for Use with Laminated Dielectric Cable Rated 2500 V Through 500 000 V
IEEE Std 592	(1990) Exposed Semiconducting Shields on Premolded High Voltage Cable Joints and Separable Insulated Connectors

NATIONAL ELECTRICAL MANUFACTURERS ASSOCIATION (NEMA)

NEMA FB 1	(1993) Fittings, Cast Metal Boxes and Conduit Bodies for Conduit and Cable Assemblies
NEMA FU 1	(1986) Low Voltage Cartridge Fuses
NEMA LA 1	(1992) Surge Arresters
NEMA PB 1	(1990) Panelboards

NEMA PB 2	(1989) Deadfront Distribution Switchboards
NEMA SG 2	(1993) High Voltage Fuses
NEMA WC 7	(1993) Cross-Linked-Thermosetting-Polyethylene- Insulated Wire and Cable for the Transmission and Distribution of Electrical Energy
NEMA WC 8	(1993) Ethylene-Propylene-Rubber-Insulated Wire and Cable for the Transmission and Distribution of Electrical Energy

NATIONAL FIRE PROTECTION ASSOCIATION (NFPA)

NFPA 70	(1996) National Electrical Code

UNDERWRITERS LABORATORIES (UL)

UL 6	(1993; Rev March 96) Rigid Metal Conduit
UL 467	(1993; Rev thru Aug 1996) Grounding and Bonding Equipment
UL 486A	(1991; Rev Oct 1991) Wire Connectors and Soldering Lugs for Use with Copper Conductors
UL 486B	(1991; Rev thru Oct 1996) Wire Connectors for Use with Aluminum Conductors
UL 510	(1994) Insulating Tape
UL 514A	(1996) Metallic Outlet Boxes
UL 651	(1995) Schedule 40 and 80 Rigid PVC Conduit
UL 1242	(1996) Intermediate Metal Conduit

1.2 GENERAL REQUIREMENTS

1.2.1 Terminology

Terminology used in this specification is as defined in IEEE Std 100.

1.2.2 Service Conditions

Items provided under this section shall be specifically suitable for the following service conditions:

a. Ambient Temperature 40 degrees C

b. Frequency 60.

c. Seismic Zone 3

1.3 SUBMITTALS

Governmental approval is required for submittals with a "GA" designation; submittals having an "FIO" designation are for information only. The following shall be submitted in accordance with Section 01300 SUBMITTAL PROCEDURES:

SD-01 Data

Fault Current and Protective Devices Coordination Studies; GA.

The study shall be submitted with protective device equipment submittals. Not time extension or similar contract modifications will be granted for work arising out of the requirements for this study. Approval of protective devices proposed shall be based on recommendations of this study. The Government shall not be held responsible for any changes to equipment, device ratings, settings, or additional labor for installation of equipment or devices ordered and/or procured prior to approval of the study.

Manufacturer's Catalog Data; GA.

Catalog cuts, brochures, circulars, specifications, product data, and printed information in sufficient detail and scope to verify compliance with the requirements of the contract documents.

Material, Equipment, and Fixture Lists; GA.

A complete itemized listing of equipment and materials proposed for incorporation into the work. Each entry shall include an item number, the quantity of items proposed, and the name of the manufacturer of each such item.

Installation Procedures; FIO.

As a minimum, installation procedures for transformers, substations, switchgear, and medium-voltage cable terminations and splices.

Procedures shall include cable pulling plans, diagrams, instructions, and precautions required to install, adjust, calibrate, and test the devices and equipment.

SD-04 Drawings

Electrical Distribution System; GA.

Detail drawings consisting of equipment drawings, illustrations, schedules, instructions, diagrams manufacturers standard installation drawings and other information necessary to define the installation and enable the Government to check conformity with the requirements of the contract drawings.

If departures from the contract drawings are deemed necessary by the Contractor, complete details of such departures shall be included with the detail drawings. Approved departures shall be made at no additional cost to the Government.

Detail drawings shall show how components are assembled, function together and how they will be installed on the project. Data and drawings for component parts of an item or system shall be coordinated and submitted as a unit. Data and drawings shall be coordinated and included in a single submission. Multiple submissions for the same equipment or system are not acceptable except where prior approval has been obtained from the Contracting Officer. In such cases, a list of data to be submitted later shall be included with the first submission. Detail drawings shall consist of the following:

a. Detail drawings showing physical arrangement, construction details, connections, finishes, materials used in fabrication, provisions for conduit or busway entrance, access requirements for installation and maintenance, physical size, electrical characteristics, foundation and support details, and equipment weight. Drawings shall be drawn to scale and/or dimensioned. All optional items shall be clearly identified as included or excluded.

b. Internal wiring diagrams of equipment showing wiring as actually provided for this project. External wiring connections shall be clearly identified.

Detail drawings shall as a minimum depict the installation of the following items:

a. Medium-voltage cables and accessories including cable installation plan.

b. Transformers.

c. Substations.

d. Switchgear.

e. Pad-mounted loadbreak switches.

f. Surge arresters.

As-Built Drawings; GA.

The as-built drawings shall be a record of the construction as installed. The drawings shall include the information shown on the contract drawings as well as deviations, modifications, and changes from the contract drawings, however minor. The as-built drawings shall be a full sized set of prints marked to reflect deviations, modifications, and changes. The as-built drawings shall be complete and show the location, size, dimensions, part identification, and other information. Additional sheets may be added. The as-built drawings shall be jointly inspected for accuracy and completeness by the Contractor's quality control representative and by the Contracting Officer prior to the submission of each monthly pay estimate. Upon completion of the work, the Contractor shall provide three full sized sets of the marked prints to the Contracting Officer for approval. If upon review, the as-built drawings are found to contain errors and/or omissions, they will be returned to the Contractor for correction. The Contractor shall correct and return the as-built drawings to the Contracting Officer for approval within 10 calendar days from the time the drawings are returned to the Contractor.

SD-09 Reports

Factory Test; FIO.

Certified factory test reports shall be submitted when the manufacturer performs routine factory tests, including tests required by standards listed in paragraph REFERENCES. Results of factory tests performed shall be certified by the manufacturer, or an approved testing laboratory, and submitted within 7 days following successful completion of the tests. The manufacturer's pass-fail criteria for tests specified in paragraph FIELD TESTING shall be included.

Field Testing; GA.

A proposed field test plan, 30 days prior to testing the installed system. No field test shall be performed until the test plan is approved. The test plan shall consist of complete field test procedures including tests to be performed, test equipment required, and tolerance limits.

Test Reports; GA.

Six copies of the information described below in 215.9 by 279.4 mm (8-1/2 by 11 inch) binders having a minimum of three rings, including a separate section for each test. Sections shall be separated by heavy plastic dividers with tabs.

a. A list of equipment used, with calibration certifications.

b. A copy of measurements taken.

c. The dates of testing.

d. The equipment and values to be verified.

e. The condition specified for the test.

f. The test results, signed and dated.

g. A description of adjustments made.

Cable Installation Reports; GA.

Six copies of the information described below in 215.9 by 279.4 mm (8-1/2 by 11 inch) binders having a minimum of three rings from which material may readily be removed and replaced, including a separate section for each cable pull. Sections shall be separated by heavy plastic dividers with tabs, with all data sheets signed and dated by the person supervising the pull.

a. Site layout drawing with cable pulls numerically identified.

b. A list of equipment used, with calibration certifications. The manufacturer and quantity of lubricant used on pull.

c. The cable manufacturer and type of cable.

d. The dates of cable pulls, time of day, and ambient temperature.

e. The length of cable pull and calculated cable pulling tensions.

f. The actual cable pulling tensions encountered during pull.

SD-13 Certificates

Materials and Equipment; GA.

Where materials or equipment are specified to conform to the standards of the Underwriters Laboratories (UL) or to be constructed or tested, or both, in accordance with the standards of the American National Standards Institute (ANSI), the Institute of Electrical and Electronics Engineers (IEEE), or the National Electrical Manufacturers Association (NEMA), the Contractor shall submit proof that the items provided conform to such requirements. The label of, or listing by, UL will be acceptable as evidence that the items conform. Either a certification or a published catalog specification data statement, to the effect that the item is in accordance with the referenced ANSI or IEEE standard, will be acceptable as evidence that the item conforms. A similar certification or published catalog specification data statement to the effect that the item is in accordance with the referenced NEMA standard, by a company listed as a member company of NEMA, will be acceptable as evidence that the item conforms. In lieu of such certification or published data, the Contractor may submit a certificate from a recognized testing agency equipped and competent to perform such services, stating that the items have been tested and that they conform to the requirements listed, including methods of testing of the specified agencies. Compliance with above-named requirements does not relieve the Contractor from compliance with any other requirements of the specifications.

Cable Splicer Qualification; GA.

A certification that contains the names and the qualifications of people recommended to perform the splicing and termination of medium-voltage cables approved for installation under this contract. The certification shall indicate that any person recommended to perform actual splicing and terminations has been adequately trained in the proper techniques and have had at least three recent years of experience in splicing and terminating the same or similar types of cables approved for installation. In addition, any person recommended by the Contractor may be required to perform a practice splice and termination, in the presence of the Contracting Officer, before being approved as a qualified installer of medium-voltage cables. If that additional requirement is imposed, the Contractor shall provide short sections of the approved types of cables along with the approved type of splice and termination kits, and detailed manufacturer's instruction for the proper splicing and termination of the approved cable types.

Cable Installer Qualifications; GA.

The Contractor shall provide at least one onsite person in a supervisory position with a documentable level of competency and experience to supervise all cable pulling operations. A resume shall be provided showing the cable installers' experience in the last three years, including a list of references complete with points of contact, addresses and telephone numbers.

SD-19 OPERATION AND MAINTENANCE MANUALS

Electrical Distribution System; GA.

Six copies of operation and maintenance manuals, within 7 calendar days following the completion of tests and including assembly, installation, operation and maintenance instructions, spare parts data which provides supplier name, current cost, catalog order number, and a recommended list of spare parts to be stocked. Manuals shall also include data outlining detailed procedures for system startup and operation, and a troubleshooting guide which lists possible operational problems and corrective action to be taken. A brief description of all equipment, basic operating features, and routine maintenance requirements shall also be included. Documents shall be bound in a binder marked or identified on the spine and front cover. A table of contents page shall be included and marked with pertinent contract information and contents of the manual. Tabs shall be provided to separate different types of documents, such as catalog ordering information, drawings, instructions, and spare parts data. Index sheets shall be provided for each section of the manual when warranted by the quantity of documents included under separate tabs or dividers.

Three additional copies of the instructions manual shall be provided within 30 calendar days following the manuals.

1.4 DELIVERY, STORAGE, AND HANDLING

Devices and equipment shall be visually inspected by the Contractor when received and prior to acceptance from conveyance. Stored items shall be protected from the environment in accordance with the manufacturer's published instructions. Damaged items shall be replaced. Oil filled transformers and switches shall be stored in accordance with the manufacturer's requirements. Wood poles held in storage for more than 2 weeks shall be stored in accordance with ANSI O5.1. Handling of wood poles shall be in accordance with ANSI O5.1, except that pointed tools capable of producing indentations more than 25 mm in depth shall not be used. Metal poles shall be handled and stored in accordance with the manufacturer's instructions.

1.5 EXTRA MATERIALS

One additional spare fuse or fuse element for each furnished fuse or fuse element shall be delivered to the contracting officer when the electrical system is accepted. Two complete sets of all special tools required for maintenance shall be provided, complete with a suitable tool box. Special tools are those that only the manufacturer provides, for special purposes (to access compartments, or operate, adjust, or maintain special parts).

PART 2 PRODUCTS

2.1 STANDARD PRODUCT

Material and equipment shall be the standard product of a manufacturer regularly engaged in the manufacture of the product and shall essentially duplicate items that have been in satisfactory use for at least 2 years prior to bid opening. Items of the same classification shall be identical including equipment, assemblies, parts, and components.

2.2 NAMEPLATES

2.2.1 General

Each major component of this specification shall have the manufacturer's name, address, type or style, model or serial number, and catalog number on a nameplate securely attached to the equipment. Nameplates shall be made of noncorrosive metal. Equipment containing liquid dielectrics shall have the type of dielectric on the nameplate. Sectionalizer switch nameplates shall have a schematic with all switch positions shown and labeled. As a minimum, nameplates shall be provided for transformers, circuit breakers, meters, switches, and switchgear.

2.2.2 Liquid-Filled Transformer Nameplates

Power transformers shall be provided with nameplate information in accordance with IEEE C57.12.00. Nameplates shall indicate the number of liters and composition of liquid-dielectric, and shall be permanently marked with a statement that the transformer dielectric to be supplied is non-polychlorinated biphenyl. If transformer nameplate is not so marked, the Contractor shall furnish manufacturer's certification for each transformer that the dielectric is non-PCB classified, with less than 50 ppm PCB content in accordance with paragraph LIQUID DIELECTRICS. Certifications shall be related to serial numbers on transformer nameplates. Transformer dielectric exceeding the 50 ppm PCB content or transformers without certification will be considered as PCB insulated and will not be accepted.

2.3 CORROSION PROTECTION

2.3.1 Aluminum Materials

Aluminum shall not be used.

2.3.2 Ferrous Metal Materials

2.3.2.1 Hardware

Ferrous metal hardware shall be hot-dip galvanized in accordance with ASTM A 153 and ASTM A 123.

2.3.2.2 Equipment

Equipment and component items, including but not limited to transformer stations and ferrous metal luminaries not hot-dip galvanized or porcelain enamel finished, shall be provided with corrosion-resistant finishes which shall withstand 120 hours of exposure to the salt spray test specified in ASTM B 117 without loss of paint or release of adhesion of the paint primer coat to the metal surface in excess of 1.6 mm (1/16 inch) from the test mark. The scribed test mark and test evaluation shall be in accordance with ASTM D 1654 with a rating of not less than 7 in accordance with TABLE 1, (procedure A). Cut edges or otherwise damaged surfaces of hot-dip galvanized sheet steel or mill galvanized sheet steel shall be coated with a zinc rich paint conforming to the manufacturer's standard.

2.3.3 Finishing

Painting required for surfaces not otherwise specified and finish painting of items only primed at the factory shall be as specified in Section 09900 PAINTING, GENERAL.

2.4 CABLES

Cables shall be single conductor type unless otherwise indicated.

2.4.1 Conductor Material

Underground cables shall be of soft drawn copper conductor material.

2.4.2 Medium-Voltage Cables

2.4.2.1 General

Medium voltage cables shall conform to the requirements of NEMA WC 7 for cables utilizing cross-linked thermosetting polyethylene ((XLP) insulation and NEMA WC 8 for cables utilizing ethylene-propylene-rubber (EPR) insulation. Cables shall be in accordance with the requirements of NFPA 70.

2.4.2.2 Insulation

Cables shall utilize cross-linked thermosetting polyethylene (XLP) insulation. Cables shall be provided with 133 percent insulation level except that 28 kV and 35 kV rated cable insulation thicknesses shall be in accordance with AEIC CS5 or AEIC CS6 as applicable.

2.4.2.3 Jackets

Cables shall be provided with a nonmetallic jacket. Concentric neutral cables for direct buried applications shall have a moisture-resistant, nonmetallic jacket rated for direct burial.

2.4.2.4 Neutrals

Neutral conductors of grounded neutral systems except for concentric neutral cables shall be of the same insulation material as phase conductors, except that a 600-volt insulation rating is acceptable. Cables employing a concentric neutral shall have full concentric neutral with an insulating jacket over the concentric neutral.

2.4.2.5 Shielding

Cables rated for above 2 kV shall have both conductor and insulation shielding for each phase, except insulation shielding is not required for 5 kV armored or metallic-sheathed cable.

2.4.2.6 Ratings

Medium-voltage cables shall be rated for a circuit voltage of15kV.

2.4.3 Low-Voltage Cables

Cables shall be rated 600 volts and shall conform to the requirements of NFPA 70. Cables shall utilize cross-linked thermosetting polyethylene (XLP) insulation and shall conform to the requirements of NEMA WC 7.

2.4.3.1 In Duct

Cables shall be single-conductor cable, Type THW, THWN, or XHHW in accordance with NFPA 70.

2.5 CABLE JOINTS, TERMINATIONS, AND CONNECTORS

2.5.1 Medium-Voltage Separable Insulated Connectors

Separable insulated connectors shall comply with IEEE Std 386 and IEEE Std 592 and shall be of suitable construction or standard splice kits shall be used. Separable insulated connectors are acceptable for voltages up to 35 kV. Connectors shall be of the loadbreak type as indicated, of suitable construction for the application and the type of cable connected, and shall include cable shield adaptors. Separable insulated connectors shall not be used as substitutes for conventional permanent splices. External clamping points and test points shall be provided.

2.5.2 Low-Voltage Cable Splices

Low-voltage cable splices and terminations shall be rated at not less than 600 Volts. Splices in conductors No. 10 AWG and smaller shall be made with an insulated, solderless, pressure type connector, conforming to the applicable requirements of UL 486A. Splices in conductors No. 8 AWG and larger shall be made with noninsulated, solderless, pressure type connector, conforming to the applicable requirements of UL 486A and UL 486B. Splices shall then be covered with an insulation and jacket material equivalent to the conductor insulation and jacket. Splices below grade or in wet locations shall be sealed type conforming to ANSI C119.1 or shall be waterproofed by a sealant-filled, thick wall, heat shrinkable, thermosetting tubing or by pouring a thermosetting resin into a mold that surrounds the joined conductors.

2.5.3 Terminations

Terminations shall be in accordance with IEEE Std 48, Class 1 or Class 2; of the molded elastomer, wet-process porcelain, prestretched elastomer, heat-shrinkable elastomer, or taped type. Acceptable elastomers are track-resistant silicone rubber or track-resistant ethylene propylene compounds, such as ethylene propylene rubber or ethylene propylene diene monomer. Separable insulated connectors may be used for apparatus terminations, when such apparatus is provided with suitable bushings. Terminations shall be of the outdoor type, except that where installed inside outdoor equipment housings which are sealed against normal infiltration of moisture and outside air, indoor, Class 2 terminations are acceptable. Class 3 terminations are not acceptable. Terminations, where required, shall be provided with mounting brackets suitable for the intended installation and with grounding provisions for the cable shielding, metallic sheath, and armor.

2.5.3.1 Factory Preformed Type

Molded elastomer, wet-process porcelain, prestretched, and heat-shrinkable terminations shall utilize factory preformed components to the maximum extent practicable rather than tape build-up. Terminations shall have basic impulse levels as required for the system voltage level. Leakage distances shall comply with wet withstand voltage test requirements of IEEE Std 48 for the next higher Basic Insulation Level (BIL) level. Anti-tracking tape shall be applied over exposed insulation of preformed molded elastomer terminations.

2.5.3.2 Taped Terminations

Taped terminations shall use standard termination kits providing terminal connectors, field-fabricated stress cones, and rain hoods. Terminations shall be at least 635 long from the end of the tapered cable jacket to the start of the terminal connector, or not less than the kit manufacturer's recommendations, whichever is greater.

2.6 CONDUIT AND DUCTS

Duct lines shall be concrete-encased, thin-wall type for duct lines between manholes and for other medium-voltage lines.

2.6.1 Metallic Conduit

Intermediate metal conduit shall comply with UL 1242. Rigid galvanized steel conduit shall comply with UL 6 and ANSI C80.1. Metallic conduit fittings and outlets shall comply with UL 514A and NEMA FB 1.

2.6.2 Nonmetallic Ducts

2.6.2.1 Concrete Encased Ducts

UL 651 Schedule 40.

2.6.3 Conduit Sealing Compound

Compounds for sealing ducts and conduit shall have a putty-like consistency workable with the hands at temperatures as low as 2 degrees C (35 degrees F), shall neither slump at a temperature of 150 degrees C (300 degrees F), nor harden materially when exposed to the air. Compounds shall adhere to clean surfaces of fiber or plastic ducts; metallic conduits or conduit coatings; concrete, masonry, or lead; any cable sheaths, jackets, covers, or insulation materials; and the common metals. Compounds shall form a seal without dissolving, noticeably changing characteristics, or removing any of the ingredients. Compounds shall have no injurious effect upon the hands of workmen or upon materials.

2.7 MANHOLES, HANDHOLES, AND PULLBOXES

Manholes, handholes, and pullboxes shall be as indicated. Strength of manholes, handholes, and pullboxes and their frames and covers shall conform to the requirements of IEEE C2. Precast-concrete manholes shall have the required strength established by ASTM C 478. Frames and covers shall be made of gray cast iron and a machine-finished seat shall be provided to ensure a matching joint between frame and cover. Cast iron shall comply with ASTM A 48, Class 30B, minimum. Handholes for low voltage cables installed in parking lots, sidewalks, and turfed areas shall be fabricated

from an aggregate consisting of sand and with continuous woven glass strands having an overall compressive strength of at least 69 MPa (10,000 psi) and a flexural strength of at least 34.5 MPa (5000 psi). Pullbox and handhole covers in sidewalks, and turfed areas shall be of the same material as the box. Concrete pullboxes shall consist of precast reinforced concrete boxes, extensions, bases, and covers.

2.8 POLES AND HARDWARE

Poles and hardware shall be in accordance with Section 16370 ELECTRICAL DISTRIBUTION SYSTEM, AERIAL.

2.9 TRANSFORMERS, SUBSTATIONS, AND SWITCHGEAR

Transformers, substations, and switchgear shall be of the outdoor type having the ratings and arrangements indicated. Medium-voltage ratings of cable terminations shall be 15 kV between phases for 133 percent insulation level.

2.9.1 Secondary Unit Substation

Secondary unit substations shall comply with ANSI C37.121 and shall be of the secondary-selective type. Substations shall be subassembled and coordinated by one manufacturer and shall be shipped in complete sections ready for connection at the site. Complete sections shall include incoming, transformer, and outgoing sections and, where practicable, shall be shipped as one unit.

2.9.1.1 Incoming Section

Metal-enclosed interrupter switchgear consisting of fused, air-insulated, interrupters in series with automatic, visible blade disconnects shall be provided for protection of incoming circuits. Metal-enclosed interrupter switchgear shall comply with IEEE C37.30 for load-interrupter switches, NEMA SG 2 for power fuses, and shall be of the outdoor no-aisle type that meets or exceeds the requirements of applicable publications listed. Switch construction shall be of the manually-operated, "OPEN-CLOSED," air-insulated, load interrupter type equipped with a stored energy operator for quick-make quick-break to make operating speeds independent of manual switch operations. Where indicated, suitable bus or lug connections shall be provided to mount field-installed, slip-on, medium-voltage cable terminations for cable entering via conduit from below. Surge protection shall be provided in accordance with paragraph SURGE ARRESTERS. Switches shall be of the 2-position type, open-closed.

a. Ratings. Fuse continuous current ratings shall be as indicated for the transformer for an incoming line unit and for the line tie unit. Unless otherwise indicated, fuses shall be of the current limiting type. Switch ratings at 60 Hz shall be:

Nominal voltage.....15 kV.

Rated maximum voltage.....25 kV.

Maximum symmetrical interrupting capacity.....15 kV.

Maximum asymmetrical interrupting capacity.....25 kV.

3-Second short time current carrying capacity.....15 kV.

Rated continuous current.....600 A.

BIL.....125 kV.

b. Basic Requirements. The electrical devices listed below shall be rated for the application and voltage and current indicated. Unless otherwise noted, manufacturer's standard devices shall be provided and shall include the following:

(1) A switch-operating handle with provisions for locking in either the open or closed position.

(2) A switch mechanical position indicator.

(3) A heater continuously energized to prevent condensation over an ambient temperature range of minus 29 degrees C (minus 20 degrees F) to 40 degrees C (104 degrees F) at 90% relative humidity and wired in series with a cabinet door-actuated switch, so the heater is de-energized when doors are open. High-temperature thermal protection shall be included.

(4) One-pole or 2-pole thermal-magnetic, molded-case circuit breakers suitable for the operating voltage for heater circuits.

(5) Safety devices as necessary to ensure that the load interrupter switch is in the open position whenever unit doors are in the open position.

(6) An interface terminal block wired for required exterior connections.

2.9.1.2 Transformer Section

Transformers shall have two separate copper windings per phase and shall be of the mineral oil-insulated type with high molecular-weight hydrocarbon liquid. Transformers shall be suitable for outdoor use. Liquid-insulated transformers shall comply with IEEE C57.12.00, ANSI C57.12.13, and ANSI C57.12.27, and shall have two 2-1/2 percent full capacity taps above and two 2-1/2 percent full capacity taps below rated voltage. Transformers shall be of the sealed tank type construction with welded-on cover. High-voltage terminals shall be provided in an air terminal chamber for incoming bottom entry cables. Low-voltage terminals shall be provided as shown on the drawings. Low-voltage terminals shall be as shown on the drawings when facing the front, accessory side of the transformer. Transformers shall be equipped with forced air cooling equipment to give 3,125 kVA capacity. The equipment shall include the necessary fans, conduit and wiring, motor starters, and top liquid thermometer for fan control. Transformer windings shall be copper construction. Transformer accessories and ratings at 60 Hz shall be as follows:

Three-phase capacity, self-cooled.....2,500 kVA.

Three-phase capacity, (future) forced-cooled.....3,125 kVA.

Impedance.....5.2 percent nonstandard.

Temperature rise.....65 degrees C.

High-voltage winding.....15 kV volts.

High-voltage winding connection.....DELTA.

Low-voltage winding.....480/277 volts.

Low-voltage winding connection.....WYE.

Accessories:

a. drain and filter connection.

b. filling and top filter press connection.

c. pressure-vacuum gauge.

d. dial type thermometer with alarm contacts.

e. magnetic liquid level indicator with high and low level alarm contacts.

f. pressure relief device with alarm contacts.

g. ground connection pad.

h. provision for jacking, lifting, and towing.

i. diagram and rating nameplate.

2.9.1.3 Integral Outgoing Section

Integral outgoing section shall be of the dead-front distribution panelboard/switchboard type. Each circuit breaker and auxiliary compartment shall have a suitable metal or laminated plastic nameplate with white cut letters at least 6.4 mm (1/4 inch) high on contrasting backgrounds identifying the breaker unit and/or circuit number as shown on the drawings.

a. Dead-Front Distribution Panelboard/Switchboard Type: Outgoing section shall be of the panelboard/switchboard type mounted integrally with the transformer and shall consist of metering devices and main and branch circuit breakers mounted in panelboard/switchboard enclosures. Panelboards shall comply with NEMA PB 1. Switchboards shall comply with NEMA PB 2. Molded-case and low-voltage power circuit breakers shall comply with paragraph METERING AND PROTECTIVE DEVICES. Plug-in type circuit breakers are not acceptable. Directories to indicate loads served by each circuit shall be typed and mounted in holders provided on panelboard doors behind protective coverings.

c. Insulated-Case Breakers: UL listed, 100 percent rated insulated-case circuit breaker electrically operated with an interrupting rating of not less than 100,000 amperes symmetrical at 480 volts. Breaker frame size shall be 4,000 amperes. Sensor rating shall be

3,000 amperes. Equipment breaker with solid-state trip device with long time, ground fault, and adjustable short time tripping characteristics so that branch breakers will normally trip first on overload and will normally trip first on overload and at lower fault current levels. Equip electrically operated breaker with motor-charged, stored-energy closing mechanism to permit rapid and safe closing of the breaker against fault currents within the short time rating of the breaker, independent of the operator's strength or effort in closing the handle.

(1) Operating Mechanism: Provide breaker with true two-step, stored-energy mechanism which allows closing in a maximum of five cycles.

(2) Each drawout breaker shall be provided with four-position operation, as follows:

(a) Connected Position: Primary and secondary contacts are fully engaged. The breaker must be tripped before it can be racked into or cut of this position.

(b) Test Position: Primary contacts are disconnected by secondary contacts remain fully engaged. This position shall allow complete test and operation of the breaker without energizing the primary circuit.

(c) Disconnected Position: Primary and secondary contacts are disconnected.

(d) Withdrawn (removed) Position: Places breaker completely out of compartment, ready for removal.

(e) Key interlocks as indicted on plans.

d. Metering: The main secondary bus of each outgoing section assembly shall include a watthour demand meter with the necessary instrument transformers, and VT and CT test blocks.

e. Ground Fault Protection: Ground fault protection shall be provided utilizing sensors of the zero-sequence type or by the residual connection of phase and neutral current sensors. Ground fault settings shall be as shown.

2.9.1.4 Nonintegral (Cable Compartment) Outgoing Section

A cable compartment shall be provided on the transformer for cable connections as shown. Clamp type terminations for cables entering from below shall be provided for connection to the transformer bushings. Clamp type cable terminations, suitable for copper conductors, shall be provided for the circuit sizes shown.

2.10 METERING AND PROTECTIVE DEVICES

2.10.1 Fuses, Low-Voltage, Current-Limiting

Low-voltage fuses shall conform to NEMA FU 1. Time delay and nontime delay options shall be as shown. Equipment provided under this contract shall be provided with a complete set of properly rated fuses when the equipment

manufacturer utilizes fuses in the manufacture of the equipment, or if current-limiting fuses are required to be installed to limit the ampere-interrupting capacity of circuit breakers or equipment to less than the maximum available fault current at the location of the equipment to be installed. Fuses shall have a voltage rating of not less than the phase-to-phase circuit voltage, and shall have the time-current characteristics required for effective power system coordination.

2.10.2 Instrument Transformers

2.10.2.1 General

Instrument transformers shall comply with ANSI C12.11 and IEEE C57.13. Instrument transformers shall be configured for mounting in/on the device to which they are applied. Polarity marks on instrument transformers shall be visually evident and shown on drawings.

2.10.3 Watthour Meters

Watthour meters shall comply with ANSI C12.1 and ANSI C12.10, except that numbered terminal wiring sequence and case size may be the manufacturer's standard. Watthour meters shall be of the drawout switchboard type having a 15 minute, cumulative form, demand register meeting ANSI C12.4 and provided with not less than 2-1/2 stators. Watthour demand meters shall have factory-installed electronic pulse initiators meeting the requirements of ANSI C12.1. Pulse initiators shall be solid-state devices incorporating light-emitting diodes, phototransistors, and power transistors, except that mercury-wetted output contacts are acceptable. Initiators shall be totally contained within watthour demand meter enclosures. They shall be capable of operating at speeds up to 500 pulses per minute with no false pulses, and they shall be factory calibrated with no field adjustments being required. Initiators shall be calibrated for a pulse rate output of 1 pulse per 1/4 disc revolution of the associated meter and shall be compatible with the indicated equipment.

2.11 SURGE ARRESTERS

Surge arresters shall comply with NEMA LA 1, IEEE C62.1, IEEE C62.2, and IEEE C62.11 and shall be provided where indicated. Arresters shall be station intermediate distribution class, rated as shown. Arresters shall be equipped with mounting brackets suitable for the indicated installations. Arresters shall be of the metal-oxide varistor type.

2.12 GROUNDING AND BONDING

2.12.1 Driven Ground Rods

Ground rods shall be copper-clad steel conforming to UL 467 not less than 19 mm (3/4 inch) in diameter by 3.1 m (10 feet) in length.

2.12.2 Grounding Conductors

Grounding conductors shall be bare, except where installed in conduit with associated phase conductors. Insulated conductors shall be of the same material as phase conductors and green color-coded, except that conductors shall be rated no more than 600 volts. Bare conductors shall be ASTM B 8 soft-drawn unless otherwise indicated. Aluminum is not acceptable.

2.13 CONCRETE AND REINFORCEMENT

Concrete work shall have minimum 20 MPa compressive strength and conform to the requirements of Section 03300 CAST-IN-PLACE STRUCTURAL CONCRETE. Concrete reinforcing shall be as specified in Section 03200 CONCRETE REINFORCEMENT.

2.14 PADLOCKS

Padlocks shall conform to ASTM F 883, Type EPC, size 2.

2.15 CABLE FIREPROOFING SYSTEMS

Cable fireproofing systems shall be listed in FM P7825 as a fire-protective coating or tape approved for grouped electrical conductors and shall be suitable for application on the type of medium-voltage cables provided. After being fully cured, materials shall be suitable for use where exposed to oil, water, gases, salt water, sewage, and fungus and shall not damage cable jackets or insulation. Asbestos materials are not acceptable.

2.15.1 Fireproof Coating

Cable fireproofing coatings shall be compounded of water-based thermoplastic resins, flame-retardant chemicals, and inorganic noncombustible fibers and shall be suitable for the application methods used. Coatings applied on bundled cables shall have a derating factor of less than 5 percent, and a dielectric strength of 95 volts per mil minimum after curing.

2.15.2 Fireproofing Tape

Fireproofing tape shall be at least 50 mm (2 inches) wide and shall be a flexible, conformable, polymeric, elastomer tape designed specifically for fireproofing cables.

2.15.3 Plastic Tape

Preapplication plastic tape shall be pressure sensitive, 0.254 mm (10 mil) thick, conforming to UL 510.

2.16 LIQUID DIELECTRICS

Liquid dielectrics for transformers, capacitors, reclosers, and other liquid-filled electrical equipment shall be non-polychlorinated biphenyl (PCB) mineral-oil or less-flammable liquid as specified. Nonflammable fluids shall not be used. Tetrachloroethylene (perchloroethylene) and 1, 2, 4 trichlorobenzene fluids shall not be used. Liquid dielectrics in retrofitted equipment shall be certified by the manufacturer as having less than 50 parts per million (ppm) PCB content. In lieu of the manufacturer's certification, the Contractor may submit a test sample of the dielectric in accordance with ASTM D 923 and have tests performed per ASTM D 4059 at a testing facility approved by the Contracting Officer. Equipment with test results indicating PCB level exceeding 50 ppm shall be replaced.

2.17 FACTORY TESTS

Factory tests shall be performed, as follows, in accordance with the applicable publications and with other requirements of these specifications. The Contracting Officer shall be notified at least 10 days before the equipment is ready for testing. The Contracting Officer reserves the right to witness the tests.

a. Transformers: Manufacturer's standard design tests in accordance with IEEE C57.12.00.

b. Transformers rated 200 kVA and above: Reduced full-wave, chopped-wave, and full-wave impulse test on each line and neutral terminal, in accordance with IEEE C57.98.

c. High-Voltage Air Switches: Manufacturer's standard tests in accordance with IEEE C37.34 and IEEE C37.41.

d. Instrument Current Transformers: Manufacturer's standard tests in accordance with IEEE C57.13.

e. Factory Preformed Terminations: Wet withstand voltage tests in accordance with IEEE Std 48 for the next higher BIL level.

f. Outdoor Switchgear: Manufacturer's standard tests in accordance with IEEE C37.20.1, IEEE C37.20.2, and IEEE C37.20.3.

g. Electrical Power Insulators: Manufacturer's standard tests in accordance with ANSI C29.1.

PART 3 EXECUTION

3.1 GENERAL INSTALLATION REQUIREMENTS

Equipment and devices shall be installed and energized in accordance with the manufacturer's published instructions. Circuits installed aerially shall conform to the requirements of Section 16370 ELECTRICAL DISTRIBUTION SYSTEM, AERIAL. Steel conduits installed underground shall be installed and protected from corrosion in conformance with the requirements of Section 16415 ELECTRICAL WORK, INTERIOR. Except as covered herein, excavation, trenching, and backfilling shall conform to the requirements of Section 02222 EXCAVATION, TRENCHING, AND BACKFILLING FOR UTILITIES SYSTEMS. Concrete work shall have minimum 20 MPacompressive strength and conform to the requirements of Section 03300CAST-IN-PLACE STRUCTURAL CONCRETE.

3.1.1 Conformance to Codes

The installation shall comply with the requirements and recommendations of NFPA 70 and IEEE C2 as applicable.

3.1.2 Verification of Dimensions

The Contractor shall become familiar with details of the work, shall verify dimensions in the field, and shall advise the Contracting Officer of any discrepancy before performing any work.

3.2 CABLE

The Contractor shall obtain from the manufacturer an installation manual or set of instructions which addresses such aspects as cable construction, insulation type, cable diameter, bending radius, cable temperature, lubricants, coefficient of friction, conduit cleaning, storage procedures, moisture seals, testing for and purging moisture, etc. The Contractor shall then prepare a checklist of significant requirementswhich shall be submitted along with the manufacturers instructions in accordance with SUBMITTALS.

3.2.1 Cable Installation Plan and Procedure

Cable shall be installed strictly in accordance with the cable manufacturer's recommendations. Each circuit shall be identified by means of a fiber, laminated plastic, or non-ferrous metal tags, or approved equal, in each manhole, handhole, junction box, and each terminal. Each tag shall contain the following information; cable type, conductor size, circuit number, circuit voltage, cable destination and phase identification.

3.2.1.1 Cable Inspection

The cable reel shall be inspected for correct storage positions, signs of physical damage, and broken end seals. If end seal is broken, moisture shall be removed from cable in accordance with the cable manufacturer's recommendations.

3.2.1.2 Duct Cleaning

Duct shall be cleaned with an assembly that consists of a flexible mandrel (manufacturers standard product in lengths recommended for the specific size and type of duct) that is 6.4 mm (1/4 inch) less than inside diameter of duct, 2 wire brushes, and a rag. The cleaning assembly shall be pulled through conduit a minimum of 2 times or until less than a volume of 131 cubic centimeters (8 cubic inches) of debris is expelled from the duct.

3.2.1.3 Duct Lubrication

The cable lubricant shall be compatible with the cable jacket for cable that is being installed. Application of lubricant shall be in accordance with lubricant manufacturer's recommendations.

3.2.1.4 Cable Installation

The Contractor shall provide a cable feeding truck and a cable pulling winch as required. The Contractor shall provide a pulling grip or pulling eye in accordance with cable manufacturer's recommendations. The pulling grip or pulling eye apparatus shall be attached to polypropylene or manilla rope followed by lubricant front end packs and then by power cables. A dynamometer shall be used to monitor pulling tension. Pulling tension shall not exceed cable manufacturer's recommendations. The Contractor shall not allow cables to cross over while cables are being fed into duct. For cable installation in cold weather, cables shall be kept at 10 degrees C (50 degrees F) temperature for at least 24 hours before installation.

3.2.1.5 Cable Installation Plan

The Contractor shall submit a cable installation plan for all cable pulls in accordance with the detail drawings portion of paragraph SUBMITTALS. Cable installation plan shall include:

a. Site layout drawing with cable pulls identified in numeric order of expected pulling sequence and direction of cable pull.

b. List of cable installation equipment.

c. Lubricant manufacturer's application instructions.

d. Procedure for resealing cable ends to prevent moisture from entering cable.

e. Cable pulling tension calculations of all cable pulls.

f. Cable percentage conduit fill.

g. Cable sidewall thrust pressure.

h. Cable minimum bend radius and minimum diameter of pulling wheels used.

i. Cable jam ratio.

j. Maximum allowable pulling tension on each different type and size of conductor.

k. Maximum allowable pulling tension on pulling device.

3.2.2 Duct Line

Cables shall be installed in duct lines where indicated. Cable joints in medium-voltage cables shall be made in manholes or approved pullboxes only. Neutral and grounding conductors shall be installed in the same duct with their associated phase conductors.

3.2.3 Direct-Burial

3.2.3.1 Trenching

Trenches for direct-burial cables shall be excavated to depths required to provide the minimum necessary cable cover. Bottoms of trenches shall be smooth and free of stones and sharp objects. Where bottoms of trenches comprise materials other than sand, a 75 mm layer of sand shall be laid first and compacted to approximate densities of surrounding firm soil.

3.2.3.2 Medium-Voltage Cable Joints or Low-Voltage Cable Splices

Cable joints or splices in direct-burial cables are not permitted in runs of 305 m or less, nor at intervals of less than 305 m in longer runs, except as required for taps. Locations of cable joints or splices in shorter intervals, where required to avoid obstructions or damage to cables, shall be approved. Cable joints or splices in direct burial installations shall be installed in above-ground junction boxes or in cast metal splice boxes

suitable for direct burial use. Cable joints or splices in duct banks shall be made only in manholes, handholes, or pullboxes.

3.2.3.3 Cable Markers

Markers shall be located near the ends of cable runs, at each cable joint or splice, at approximately every 150 malong cable runs, and at changes in direction of cable runs. In addition to markers, a 0.127 mm (5 mil), brightly colored plastic tape not less than 75 mm (3 inches) in width and suitably inscribed at not more than 3 m (10 feet) on centers, or other approved dig-in warning indication, shall be placed approximately 300 mm below finished grade levels of trenches.

3.2.4 Electric Manholes

Cables shall be routed around the interior walls and securely supported from walls on cables racks. Cable routing shall minimize cable crossover, provide access space for maintenance and installation of additional cables, and maintain cable separation in accordance with IEEE C2.

3.3 CABLE JOINTS

Medium-voltage cable joints shall be made by qualified cable splicers only. Qualifications of cable splicers shall be submitted in accordance with paragraph SUBMITTALS. Shields shall be applied as required to continue the shielding system through each entire cable joint. Shields may be integrally molded parts of preformed joints. Shields shall be grounded at each joint or in accordance with manufacturer's recommended practice. Cable joints shall provide insulation and jacket equivalent to that of the associated cable. Armored cable joints shall be enclosed in compound-filled, cast-iron or alloy, splice boxes equipped with stuffing boxes and armor clamps of a suitable type and size for the cable being installed.

3.4 FIREPROOFING

Fire-stops shall be installed in each conduit entering or leaving a manhole.

3.4.1 Tape Method

Before application of fireproofing tape, plastic tape wrapping shall be applied over exposed metallic items such as the cable ground wire, metallic outer covering, or armor to minimize the possibility of corrosion from the fireproofing materials and moisture. Before applying fireproofing tape, irregularities of cables, such as at cable joints, shall be evened out with insulation putty. A flexible conformable polymeric elastomer fireproof tape shall be wrapped tightly around each cable spirally in 1/2 lapped wrapping or in 2 butt-jointed wrappings with the second wrapping covering the joints of the first.

3.4.2 Sprayable Method

Manholes shall be power ventilated until coatings are dry and dewatered and the coatings are cured. Ventilation requirements shall be in accordance with the manufacturer's instruction, but not less than 10 air changes per hour shall be provided. Cable coatings shall be applied by spray, brush, or glove to a wet film thickness that reduces to the dry film thickness approved for fireproofing by FM P7825. Application methods and necessary

safety precautions shall be in accordance with the manufacturers instructions. After application, cable coatings shall be dry to the touch in 1 to 2 hours and fully cured in 48 hours, except where the manufacturer has stated that because of unusual humidity or temperature, longer periods may be necessary.

3.5 DUCT LINES

3.5.1 Requirements

Numbers and sizes of ducts shall be as indicated. Duct lines shall be laid with a minimum slope of 100 mm per 30 m. Depending on the contour of the finished grade, the high-point may be at a terminal, a manhole, a handhole, or between manholes or handholes. Short-radius manufactured 90-degree duct bends may be used only for pole or equipment risers, unless specifically indicated as acceptable. The minimum manufactured bend radius shall be 450 mm (18 inches) for ducts of less than 80 mm (3 inch) diameter, and 900 mm (36 inches) for ducts 80 mm (3 inches) or greater in diameter. Otherwise, long sweep bends having a minimum radius of 7.6 m shall be used for a change of direction of more than 5 degrees, either horizontally or vertically. Both curved and straight sections may be used to form long sweep bends, but the maximum curve used shall be 30 degrees and manufactured bends shall be used. Ducts shall be provided with end bells whenever duct lines terminate in manholes or handholes.

3.5.2 Treatment

Ducts shall be kept clean of concrete, dirt, or foreign substances during construction. Field cuts requiring tapers shall be made with proper tools and match factory tapers. A coupling recommended by the duct manufacturer shall be used whenever an existing duct is connected to a duct of different material or shape. Ducts shall be stored to avoid warping and deterioration with ends sufficiently plugged to prevent entry of any water or solid substances. Ducts shall be thoroughly cleaned before being laid. Plastic ducts shall be stored on a flat surface and protected from the direct rays of the sun.

3.5.3 Concrete Encasement

Ducts requiring concrete encasements shall comply with NFPA 70, except that electrical duct bank configurations for ducts 150 mm (6 inches) in diameter shall be determined by calculation and as shown on the drawings. The separation between adjacent electric power and communication ducts shall conform to IEEE C2. Duct line encasements shall be monolithic construction. Where a connection is made to a previously poured encasement, the new encasement shall be well bonded or doweled to the existing encasement. The Contractor shall submit proposed bonding method for approval in accordance with the detail drawing portion of paragraph SUBMITTALS. At any point, except railroad and airfield crossings, tops of concrete encasements shall be not less than the cover requirements listed in NFPA 70. At railroad and airfield crossings, duct lines shall be encased with concrete and reinforced as indicated to withstand specified surface loadings. Tops of concrete encasements shall be not less than 1.5 m below tops of rails or airfield paving unless otherwise indicated. Where ducts are jacked under existing pavement, rigid steel conduit will be installed because of its strength. To protect the corrosion-resistant conduit coating, predrilling or installing conduit inside a larger iron pipe sleeve (jack-and-sleeve) is required. For

crossings of existing railroads and airfield pavements greater than 15 m in length, the predrilling method or the jack-and-sleeve method will be used. Separators or spacing blocks shall be made of steel, concrete, plastic, or a combination of these materials placed not farther apart than 1.2 m on centers. Ducts shall be securely anchored to prevent movement during the placement of concrete and joints shall be staggered at least 150 mm vertically.

3.5.4 Duct Line Markers

Duct line markers shall be provided at the ends of long duct line stubouts or for other ducts whose locations are indeterminate because of duct curvature or terminations at completely below-grade structures. In addition to markers, a 0.127 mm (5 mil)brightly colored plastic tape, not less than 75 mm (3 inches) in width and suitably inscribed at not more than 3 m (10 feet) on centers with a continuous metallic backing and a corrosion-resistant 0.0254 mm (1 mil) metallic foil core to permit easy location of the duct line, shall be placed approximately 300 mm below finished grade levels of such lines.

3.6 MANHOLES, HANDHOLES, AND PULLBOXES

3.6.1 General

Manholes shall be constructed approximately where shown. The exact location of each manhole shall be determined after careful consideration has been given to the location of other utilities, grading, and paving. The location of each manhole shall be approved by the Contracting Officer before construction of the manhole is started. Manholes shall be the type noted on the drawings and shall be constructed in accordance with the applicable details as indicated. Top, walls, and bottom shall consist of reinforced concrete. Walls and bottom shall be of monolithic concrete construction. The Contractor may at his option utilize monolithically constructed precast-concrete manholes having the required strength and inside dimensions as required by the drawings or specifications. In paved areas, frames and covers for manhole and handhole entrances in vehicular traffic areas shall be flush with the finished surface of the paving. In unpaved areas, the top of manhole covers shall be approximately 15 mm above the finished grade. Where existing grades that are higher than finished grades are encountered, concrete assemblies designed for the purpose shall be installed to elevate temporarily the manhole cover to existing grade level. All duct lines entering manholes must be installed on compact soil or otherwise supported when entering a manhole to prevent shear stress on the duct at the point of entrance to the manhole. Duct lines entering cast-in-place concrete manholes shall be cast in-place with the manhole. Duct lines entering precast concrete manholes through a precast knockout penetration shall be grouted tight with a portland cement mortar. PVC duct lines entering precast manholes through a PVC endbell shall be solvent welded to the endbell. A cast metal grille-type sump frame and cover shall be installed over the manhole sump. A cable-pulling iron shall be installed in the wall opposite each duct line entrance.

3.6.2 Electric Manholes

Cables shall be securely supported from walls by hot-dip galvanized cable racks with a plastic coating over the galvanizing and equipped with adjustable hooks and insulators. The number of cable racks indicated shall

be installed in each manhole and not less than 2 spare hooks shall be installed on each cable rack. Insulators shall be made of high-glazed porcelain. Insulators will not be required on spare hooks.

3.6.3 Communications Manholes

The number of hot-dip galvanized cable racks with a plastic coating over the galvanizing indicated shall be installed in each telephone manhole. Each cable rack shall be provided with 2 cable hooks. Cables for the telephone and communication systems will be installed by others.

3.6.4 Handholes

Handholes shall be located approximately as shown. Handholes shall be of the type noted on the drawings and shall be constructed in accordance with the details shown.

3.6.5 Pullboxes

Pullbox tops shall be flush with sidewalks or curbs or placed 15 mm above surrounding grades when remote from curbed roadways or sidewalks. Covers shall be marked "Low-Voltage" and provided with 2 lifting eyes and 2 hold-down bolts. Each box shall have a suitable opening for a ground rod. Conduit, cable, ground rod entrances, and unused openings shall be sealed with mortar.

3.6.6 Ground Rods

A ground rod shall be installed at the manholes, handholes and pullboxes. Ground rods shall be driven into the earth before the manhole floor is poured so that approximately 100 mm of the ground rod will extend above the manhole floor. When precast concrete manholes are used, the top of the ground rod may be below the manhole floor and a No. 1/0 AWG ground conductor brought into the manhole through a watertight sleeve in the manhole wall.

3.7 PAD-MOUNTED EQUIPMENT INSTALLATION

Pad-mounted equipment, shall be installed on concrete pads in accordance with the manufacturer's published, standard installation drawings and procedures, except that they shall be modified to meet the requirements of this document. Units shall be installed so that they do not damage equipment or scratch painted or coated surfaces. After installation, surfaces shall be inspected and scratches touched up with a paint or coating provided by the manufacturer especially for this purpose. Three-phase transformers shall be installed with A-B-C phase sequence. Primary taps shall be set at 2 percent.

3.7.1 Concrete Pads

3.7.1.1 Construction

Concrete pads for pad-mounted electrical equipment may be either pre-fabricated or poured-in-place. Pads shall be constructed as indicated, except that exact pad dimensions and mounting details are equipment specific and are the responsibility of the Contractor. Tops of concrete pads shall be level and shall project 100 mm above finished paving or grade and sloped to drain. Edges of concrete pads shall have 20 mm chamfer. Conduits for

primary, secondary, and grounding conductors shall be set in place prior to placement of concrete pads. Where grounding electrode conductors are installed through concrete pads, PVC conduit sleeves shall be installed through the concrete to provide physical protection. To facilitate cable installation and termination, the concrete pad shall be provided with a rectangular hole below the primary and secondary compartments, sized in accordance with the manufacturer's recommended dimensions. Upon completion of equipment installation the rectangular hole shall be filled with masonry grout.

3.7.1.2 Concrete and Reinforcement

Concrete work shall have minimum 20 MPa compressive strength and comform to the requirements of Section 03300 CAST-IN-PLACE STRUCTURAL CONCRETE. Concrete pad reinforcement shall be in accordance with Section 03200 CONCRETE REINFORCEMENT.

3.7.1.3 Sealing

When the installation is complete, the Contractor shall seal all conduit and other entries into the equipment enclosure with an approved sealing compound. Seals shall be of sufficient strength and durability to protect all energized live parts of the equipment from rodents, insects, or other foreign matter.

3.8 CONNECTIONS BETWEEN AERIAL AND UNDERGROUND SYSTEMS

Connections between aerial and underground systems shall be made as shown. Underground cables shall be extended up poles in conduit to cable terminations. Conduits shall be secured to the poles by 2-hole galvanized steel pipe straps spaced not more than 3 m apart and with 1 strap not more than 300 mm from any bend or termination. Cable guards shall be secured to poles in accordance with the manufacturer's published procedures. Conduits shall be equipped with bushings to protect cables and minimize water entry. Capnut potheads shall be used to terminate medium-voltage multiple-conductor cable. Cables shall be supported by devices separate from the conduit or guard, near their point of exit from the conduit or guard.

3.8.1 Pole Installation

Pole installation shall be in accordance with Section 16370 ELECTRICAL DISTRIBUTION SYSTEM, AERIAL.

3.9 CONNECTIONS TO BUILDINGS

Cables shall be extended into the various buildings as indicated, and shall be connected to the first applicable termination point in each building. Interfacing with building interior conduit systems shall be at conduit stubouts terminating 1.5 m outside of a building and 600 mm mm below finished grade as specified and provided under Section 16415 ELECTRICAL WORK, INTERIOR. After installation of cables, conduits shall be sealed with caulking compound to prevent entrance of moisture or gases into buildings.

3.10 GROUNDING

A ground ring consisting of the indicated configuration of bare copper conductors and driven ground rods shall be installed around pad-mounted

equipment as shown. Equipment frames of metal-enclosed equipment, and other noncurrent-carrying metal parts, such as cable shields, cable sheaths and armor, and metallic conduit shall be grounded. At least 2 connections shall be provided from a transformer, and a unit substation to the ground mat. Metallic frames and covers of handholes and pull boxes shall be grounded by use of a braided, copper ground strap with equivalent ampacity of No. 6 AWG.

3.10.1 Grounding Electrodes

Grounding electrodes shall be installed as shown on the drawings and as follows:

a. Driven rod electrodes - Unless otherwise indicated, ground rods shall be driven into the earth until the tops of the rods are approximately 300 mm below finished grade.

b. Ground ring - A ground ring shall be installed as shown consisting of bare copper conductors installed 300 mm, plus or minus 75 mm, below finished top of soil grade. Ground ring conductors shall be No. 2 AWG, minimum.

d. Additional electrodes - When the required ground resistance is not met, additional electrodes shall be provided interconnected with grounding conductors to achieve the specified ground resistance. The additional electrodes will be up to three, 3 m (10 feet) rods spaced a minimum of 3.7 m apart. In high ground resistance, UL listed chemically charged ground rods may be used. If the resultant resistance exceeds 25 ohms measured not less than 48 hours after rainfall, the Contracting Officer shall be notified immediately.

3.10.2 Grounding and Bonding Connections

Connections above grade shall be made by the fusion-welding process or with bolted solderless connectors, in compliance with UL 467, and those below grade shall be made by a fusion-welding process. Where grounding conductors are connected to aluminum-composition conductors, specially treated or lined copper-to-aluminum connectors suitable for this purpose shall be used.

3.10.3 Grounding and Bonding Conductors

Grounding and bonding conductors include conductors used to bond transformer enclosures and equipment frames to the grounding electrode system. Grounding and bonding conductors shall be sized as shown, and located to provide maximum physical protection. Bends greater than 45 degrees in ground conductors are not permitted. Routing of ground conductors through concrete shall be avoided. When concrete penetration is necessary, nonmetallic conduit shall be cast flush with the points of concrete entrance and exit so as to provide an opening for the ground conductor, and the opening shall be sealed with a suitable compound after installation.

3.10.4 Manhole, Handhole, or Concrete Pullbox Grounding

Ground rods installed in manholes, handholes, or concrete pullboxes shall be connected to cable racks, cable-pulling irons, the cable shielding, metallic sheath, and armor at each cable joint or splice by means of a No. 4

AWG braided tinned copper wire. Connections to metallic cable sheaths shall be by means of tinned terminals soldered to ground wires and to cable sheaths. Care shall be taken in soldering not to damage metallic cable sheaths or shields. Ground rods shall be protected with a double wrapping of pressure-sensitive plastic tape for a distance of 50 mm above and 150 mmbelow concrete penetrations. Grounding electrode conductors shall be neatly and firmly attached to manhole or handhole walls and the amount of exposed bare wire shall be held to a minimum.

3.10.5 Metal Splice Case Grounding

Metal splice cases for medium-voltage direct-burial cable shall be grounded by connection to a driven ground rod located within 600 mm of each splice box using a grounding electrode conductor having a current-carrying capacity of at least 20 percent of the individual phase conductors in the associated splice box, but not less than No. 6 AWG.

3.10.6 Riser Pole Grounding

A single continuous vertical grounding electrode conductor shall be installed on each riser pole and connected directly to the grounding electrodes indicated on the drawings or required by these specifications. All equipment, neutrals, surge arresters, and items required to be grounded shall be connected directly to this vertical conductor. The grounding electrode conductor shall be sized as shown. Grounding electrode conductors shall be stapled to wood poles at intervals not exceeding 600 mm.

3.11 FIELD TESTING

3.11.1 General

Field testing shall be performed in the presence of the Contracting Officer. The Contractor shall notify the Contracting Officer 30 days prior to conducting tests. The Contractor shall furnish all materials, labor, and equipment necessary to conduct field tests. The Contractor shall perform all tests and inspections recommended by the manufacturer unless specifically waived by the Contracting Officer. The Contractor shall maintain a written record of all tests which includes date, test performed, personnel involved, devices tested, serial number and name of test equipment, and test results. Field test reports shall be signed and dated by the Contractor.

3.11.2 Safety

The Contractor shall provide and use safety devices such as rubber gloves, protective barriers, and danger signs to protect and warn personnel in the test vicinity. The Contractor shall replace any devices or equipment which are damaged due to improper test procedures or handling.

3.11.3 Ground-Resistance Tests

The resistance of each grounding electrode system shall be measured using the fall-of-potential method defined in IEEE Std 81. Ground resistance measurements shall be made before the electrical distribution system is energized and shall be made in normally dry conditions not less than 48 hours after the last rainfall. Resistance measurements of separate grounding electrode systems shall be made before the systems are bonded

together below grade. The combined resistance of separate systems may be used to meet the required resistance, but the specified number of electrodes must still be provided.

a. Single rod electrode - 25 ohms.

b. Multiple rod electrodes - 10 ohms.

c. Ground ring - 10 ohms.

3.11.4 Medium-Voltage Cable Test

After installation and before the operating test or connection to an existing system, the medium-voltage cable system shall be given a high potential test. Direct-current voltage shall be applied on each phase conductor of the system by connecting conductors as one terminal and connecting grounds or metallic shieldings or sheaths of the cable as the other terminal for each test. Prior to making the test, the cables shall be isolated by opening applicable protective devices and disconnecting equipment. The test shall be conducted with all splices, connectors, and terminations in place. The method, voltage, length of time, and other characteristics of the test for initial installation shall be in accordance with NEMA WC 7 or NEMA WC 8 for the particular type of cable installed, except that 28 kV and 35 kV insulation test voltages shall be in accordance with either AEIC CS5 or AEIC CS6 as applicable, and shall not exceed the recommendations of IEEE Std 404 for cable joints and IEEE Std 48 for cable terminations unless the cable and accessory manufacturers indicate higher voltages are acceptable for testing. Should any cable fail due to a weakness of conductor insulation or due to defects or injuries incidental to the installation or because of improper installation of cable, cable joints, terminations, or other connections, the Contractor shall make necessary repairs or replace cables as directed. Repaired or replaced cables shall be retested.

3.11.5 Low-Voltage Cable Test

Low-voltage cable, complete with splices, shall be tested for insulation resistance after the cables are installed, in their final configuration, ready for connection to the equipment, and prior to energization. The test voltage shall be 500 volts dc, applied for one minute between each conductor and ground and between all possible combinations conductors in the same trench, duct, or cable, with all other conductors in the same trench, duct, or conduit. The minimum value of insulation shall be:

R in megohms = (rated voltage in kV + 1) x 304,800/(length of cable in meters)

Each cable failing this test shall be repaired or replaced. The repaired cable shall be retested until failures have been eliminated.

3.11.6 Liquid-Filled Transformer Tests

The following field tests shall be performed on all liquid-filled transformers. Pass-fail criteria shall be in accordance with transformer manufacturer's specifications.

a. Insulation resistance test phase-to-ground.

b. Turns ratio test.

c. Correct phase sequence.

d. Correct operation of tap changer.

3.11.7 Dry-Type Transformer Tests

The following field tests shall be performed on all dry-type transformers dry-type transformer 500 kVA and above. Pass-fail criteria shall be in accordance with the transformer manufacturer's specifications.

a. Insulation resistance test phase-to-ground.

b. Turns ratio test.

3.11.8 Pre-Energization Services

Calibration, testing, adjustment, and placing into service of the installation shall be accomplished by a manufacturer's product field service engineer or independent testing company with a minimum of 2 years of current product experience. The following services shall be performed on the equipment listed below. These services shall be performed subsequent to testing but prior to the initial energization. The equipment shall be inspected to ensure that installation is in compliance with the recommendations of the manufacturer and as shown on the detail drawings. Terminations of conductors at major equipment shall be inspected to ensure the adequacy of connections. Bare and insulated conductors between such terminations shall be inspected to detect possible damage during installation. If factory tests were not performed on completed assemblies, tests shall be performed after the installation of completed assemblies. Components shall be inspected for damage caused during installation or shipment to ensure packaging materials have been removed. Components capable of being both manually and electrically operated shall be operated manually prior to the first electrical operation. Components capable of being calibrated, adjusted, and tested shall be calibrated, adjusted, and tested in accordance with the instructions of the equipment manufacturer. Items for which such services shall be provided, but are not limited to, are the following:

a. Secondary unit substation

b. Pad-mounted transformers

c. Panelboards

d. Switchboards

e. Metal-enclosed switchgear

f. Busways

g. Switches

3.11.9 Operating Tests

After the installation is completed, and at such times as the Contracting Officer may direct, the Contractor shall conduct operating tests for approval. The equipment shall be demonstrated to operate in accordance with the requirements herein. An operating test report shall be submitted in accordance with paragraph SUBMITTALS.

3.12 ACCEPTANCE

Final acceptance of the facility will not be given until the Contractor has successfully completed all tests and after all defects in installation, material or operation have been corrected.

End of Section

SECTION 16415

ELECTRICAL WORK, INTERIOR
08/96

PART 1 GENERAL

1.1 REFERENCES

The publications listed below form a part of this specification to the extent referenced. The publications are referred to in the text by basic designation only.

AMERICAN NATIONAL STANDARDS INSTITUTE (ANSI)

ANSI C12.10	(1987) Electromechanical Watthour Meters
ANSI C39.1	(1981; R 1992) Requirements for Electrical Analog Indicating Instruments
ANSI C82.1	(1985; C82.1a; C82.1b; C82.1c; R 1992) Specifications for Fluorescent Lamp Ballasts
ANSI C82.4	(1992) Ballasts for High-Intensity-Discharge and Low-Pressure Sodium Lamps (Multiple-Supply Type)

AMERICAN SOCIETY FOR TESTING AND MATERIALS (ASTM)

ASTM B 1	(1990) Hard-Drawn Copper Wire
ASTM B 8	(1993) Concentric-Lay-Stranded Copper Conductors, Hard, Medium-Hard, or Soft
ASTM D 709	(1992) Laminated Thermosetting Materials

CODE OF FEDERAL REGULATIONS (CFR)

47 CFR 18	Industrial, Scientific, and Medical Equipment

INSTITUTE OF ELECTRICAL AND ELECTRONICS ENGINEERS (IEEE)

IEEE C37.20.1	(1993) Metal-Enclosed Low-Voltage Power Circuit-Breaker Switchgear
IEEE C62.41	(1991) Surge Voltages in Low-Voltage AC Power Circuits
IEEE Std 81	(1983) Guide for Measuring Earth Resistivity, Ground Impedance, and Earth Surface Potentials of a Ground System (Part 1)

NATIONAL ELECTRICAL MANUFACTURERS ASSOCIATION (NEMA)

NEMA AB 1	(1993) Molded Case Circuit Breakers and Molded Case Switches

NEMA BU 1	(1994) Busways
NEMA FU 1	(1986) Low Voltage Cartridge Fuses
NEMA ICS 1	(1993) Industrial Control and Systems
NEMA ICS 2	(1993) Industrial Control and Systems Controllers, Contactors, Overload Relays Rated Not More Than 2,000 Volts AC or 750 DC
NEMA ICS 3	(1993) <CHG>Industrial Control and Systems Factory Built Assemblies
NEMA ICS 6	(1993) Industrial Control and Systems Enclosures
NEMA LE 4	(1987) Recessed Luminaires, Ceiling Compatibility
NEMA MG 1	(1993; Rev 1; Rev 2; Rev 3) Motors and Generators
NEMA MG 10	(1994) Energy Management Guide for Selection and Use of Polyphase Motors
NEMA OS 1	(1989) Sheet-Steel Outlet Boxes, Device Boxes, Covers, and Box Supports
NEMA PB 1	(1990) Panelboards
NEMA PB 2	(1995) Deadfront Distribution Switchboards
NEMA RN 1	(1989) Polyvinyl-Chloride (PVC) Externally Coated Galvanized Rigid Steel Conduit and Intermediate Metal Conduit
NEMA ST 20	(1992) Dry-Type Transformers for General Applications
NEMA TC 2	(1990) Electrical Polyvinyl Chloride (PVC) Tubing (EPT) and Conduit (EPC-40 and EPC-80)
NEMA VE 1	(1991) Metal Cable Tray Systems
NEMA WD 1	(1983; R 1989) General Requirements for Wiring Devices
NEMA WD 6	(1988) Wiring Devices - Dimensional Requirements

NATIONAL FIRE PROTECTION ASSOCIATION (NFPA)

NFPA 70	(1996) National Electrical Code
NFPA 101	(1997) Safety to Life from Fire in Buildings and Structures

UNDERWRITERS LABORATORIES (UL)

UL-03	(1996; Supple) Electrical Construction Materials Directory
UL 1	(1993; Rev thru Jan 1995) Flexible Metal Conduit
UL 5	(1995) Surface Metal Raceways and Fittings
UL 6	(1993; Rev Mar 1996) Rigid Metal Conduit
UL 20	(1995; Rev thru Apr 1997) General-Use Snap Switches
UL 50	(1995; Rev Oct 1996) Enclosures for Electrical Equipment
UL 67	(1993; Rev thru Dec 1993) Panelboards
UL 83	(1996) Thermoplastic-Insulated Wires and Cables
UL 98	(1994; R Oct 1995) Enclosed and Dead-Front Switches
UL 198C	(1986; Rev thru Jun 1993) High-Interrupting-Capacity Fuses, Current-Limiting Types
UL 198E	(1988; Rev Jul 1988) Class R Fuses
UL 360	(1996; Rev Mar 1997) Liquid-Tight Flexible Steel Conduit
UL 467	(1993; Rev thru Aug 1996) Grounding and Bonding Equipment
UL 486A	(1991; Rev Oct 1991) Wire Connectors and Soldering Lugs for Use with Copper Conductors
UL 486C	(1997) Splicing Wire Connectors
UL 486E	(1994; Rev thru Feb 1997) Equipment Wiring Terminals for Use with Aluminum and/or Copper Conductors
UL 489	(1996; Rev May 1997) Molded-Case Circuit Breakers, Molded-Case Switches, and Circuit-Breaker Enclosures
UL 498	(1996) Attachment Plugs and Receptacles
UL 506	(1994; Rev Jul 1994) Specialty Transformers
UL 508	(1993) Industrial Control Equipment
UL 510	(1994) Insulating Tape

UL 512	(1993; R Dec 1995) Fuseholders
UL 514A	(1996) Metallic Outlet Boxes
UL 514B	(1996) Fittings for Conduit and Outlet Boxes
UL 514C	(1996) Nonmetallic Outlet Boxes, Flush-Device Boxes, and Covers
UL 542	(1994; Rev May 1997) Lampholders, Starters, and Starter Holders for Fluorescent Lamps
UL 651	(1995; Rev Jan 1997) Schedule 40 and 80 Rigid PVC Conduit
UL 651A	(1995; Rev Sep 1996) Type EB and A Rigid PVC Conduit and HDPE Conduit
UL 797	(1993; Rev thru Mar 1997) Electrical Metallic Tubing
UL 817	(1994; Rev thru Feb 1997) Cord Sets and Power-Supply Cords
UL 844	(1995; Rev thru Aug 1996) Electric Lighting Fixtures for Use in Hazardous (Classified) Locations
UL 845	(1995; Rev Feb 1996) Motor Control Centers
UL 857	(1994; Rev thru Nov 1996) Busways and Associated Fittings
UL 869A	(1993; Rev Apr 1994) Reference Standard for Service Equipment
UL 877	(1993; Rev Jul 1995) Circuit Breakers and Circuit-Breaker Enclosures for Use in Hazardous (Classified) Locations
UL 891	(1994; Rev thru Jan 1995) Dead-Front Switchboards
UL 924	(1995; Rev thru May 95) Emergency Lighting and Power Equipment
UL 935	(1995; Rev thru Apr 1997)Fluorescent-Lamp Ballasts
UL 943	(1993; Rev thru Mar 1997)Ground-Fault Circuit Interrupters
UL 1004	(1994; Rev thru Feb 1997) Electric Motors
UL 1029	(1994; Rev Sep 1995) High-Intensity-Discharge Lamp Ballasts

UL 1570	(1995) Fluorescent Lighting Fixtures
UL 1572	(1995; Rev thru Sep 96) High Intensity Discharge Lighting Fixtures
UL 1660	(1994) Liquid-Tight Flexible Nonmetallic Conduit

1.2 GENERAL

1.2.1 Rules

The installation shall conform to the requirements of NFPA 70 and NFPA 101, unless more stringent requirements are indicated herein or shown.

1.2.2 Coordination

The drawings indicate the extent and the general location and arrangement of equipment, conduit, and wiring. The Contractor shall become familiar with all details of the work and verify all dimensions in the field so that the outlets and equipment shall be properly located and readily accessible. Lighting fixtures, outlets, and other equipment and materials shall be located to avoid interference with mechanical or structural features; otherwise, lighting fixtures shall be symmetrically located according to the room arrangement when uniform illumination is required, or asymmetrically located to suit conditions fixed by design and shown. Raceways, junction and outlet boxes, and lighting fixtures shall not be supported from sheet metal roof decks. If any conflicts occur necessitating departures from the drawings, details of and reasons for departures shall be submitted and approved prior to implementing any change. The Contractor shall coordinate electrical work with the HVAC and electrical drawings and specifications and provide power related wiring.

1.2.3 Standard Products

Material and equipment shall be a standard product of a manufacturer regularly engaged in the manufacture of the product and shall essentially duplicate items that have been in satisfactory use for at least 2 years prior to bid opening.

1.2.4 NAMEPLATES

1.2.4.1 Identification Nameplates

Major items of electrical equipment and major components shall be permanently marked with an identification name to identify the equipment by type or function and specific unit number as indicated. Designation of motors shall coincide with their designation in the motor control center or panel. Unless otherwise specified, identification nameplates shall be made of laminated plastic in accordance with ASTM D 709 with black outer layers and a white core. Edges shall be chamfered. Plates shall be fastened with black-finished round-head drive screws, except motors, or approved nonadhesive metal fasteners. When the nameplate is to be installed on an irregular-shaped object, the Contractor shall devise an approved support suitable for the application and ensure the proper installation of the supports and nameplates. In all instances, the nameplate shall be installed

in a conspicuous location. At the option of the Contractor, the equipment manufacturer's standard embossed nameplate material with black paint-filled letters may be furnished in lieu of laminated plastic. The front of each panelboard, motor control center, switchgear, and switchboard shall have a nameplate to indicate the phase letter, corresponding color and arrangement of the phase conductors. The following equipment, as a minimum, shall be provided with identification nameplates:

Minimum 6.4 mm High Letters	Minimum 3.2 mm High Letters
Panelboards	Control Power Transformers
Starters	Control Devices
Safety Switches	Instrument Transformers
Motor Control Centers	
Transformers	
Equipment Enclosures	
Switchgear	
Switchboards	
Motors	

Each panel, section, or unit in motor control centers, switchgear or similar assemblies shall be provided with a nameplate in addition to nameplates listed above, which shall be provided for individual compartments in the respective assembly, including nameplates which identify "future," "spare," and "dedicated" or "equipped spaces."

1.2.5 As-Built Drawings

Following the project completion or turnover, within 30 days the Contractor shall furnish two sets of as-built drawings to the Contracting Officer.

1.3 SUBMITTALS

Government approval is required for submittals with a "GA" designation; submittals having an "FIO" designation are for information only. The following shall be submitted in accordance with Section 01300 SUBMITTAL PROCEDURES:

SD-01 Data

Manufacturer's Catalog; GA.

Data composed of catalog cuts, brochures, circulars, specifications, product data, and printed information in sufficient detail and scope to verify compliance with the requirements of the contract documents.

Material, Equipment, and Fixture Lists; GA.

A complete itemized listing of equipment and materials proposed for incorporation into the work. Each entry shall include an item number, the quantity of items proposed, and the name of the manufacturer of each item.

Installation Procedures; FIO.

Installation procedures for rotating equipment, transformers, switchgear, battery systems, voltage regulators, and grounding resistors. Procedures shall include diagrams, instructions, and precautions required to install, adjust, calibrate, and test devices and equipment.

SD-04 Drawings

As-Built Drawings; GA.

The as-built drawings shall be a record of the construction as installed. The drawings shall include all the information shown on the contract drawings, deviations, modifications, and changes from the contract drawings, however minor. The as-built drawings shall be kept at the job site and updated daily. The as-built drawings shall be a full-sized set of prints marked to reflect all deviations, changes, and modifications. The as-built drawings shall be complete and show the location, size, dimensions, part identification, and other information. Additional sheets may be added. The as-built drawings shall be jointly inspected for accuracy and completeness by the Contractor's quality control representative and by the Contracting Officer prior to the submission of each monthly pay estimate. Upon completion of the work, the Contractor shall submit three full sized sets of the marked prints to the Contracting Officer for approval. If upon review, the as-built drawings are found to contain errors and/or omissions, they will be returned to the Contractor for correction. The Contractor shall correct and return the as-built drawings to the Contracting Officer for approval within ten calendar days from the time the drawings are returned to the Contractor.

SD-08 Statements

On-Site Test; GA.

A detailed description of the Contractor's proposed procedures for on-site tests.

SD-09 Reports

Factory Test Reports; GA.

Six copies of the information described below in 216 x 280 mm binders having a minimum of 5 rings from which material may readily be removed and replaced, including a separate section for each test. Sections shall be separated by heavy plastic dividers with tabs.

a. A list of equipment used, with calibration certifications.

b. A copy of measurements taken.

c. The dates of testing.

d. The equipment and values to be verified.

e. The conditions specified for the test.

f. The test results, signed and dated.

g. A description of adjustments made.

Field Test Reports; GA.

Six copies of the information described below in 216 x 280 mm binders having a minimum of 5 rings from which material may readily be removed and replaced, including a separate section for each test. Sections shall be separated by heavy plastic dividers with tabs.

a. A list of equipment used, with calibration certifications.

b. A copy of measurements taken.

c. The dates of testing.

d. The equipment and values to be verified.

e. The conditions specified for the test.

f. The test results, signed and dated.

g. A description of adjustments made.

h. Final position of controls and device settings.

SD-13 Certificates

Materials and Equipment; GA.

The label or listing of the Underwriters Laboratories, Inc., will be accepted as evidence that the materials or equipment conform to the applicable standards of that agency. In lieu of this label or listing, a statement from a nationally recognized, adequately equipped testing agency indicating that the items have been tested in accordance with required procedures and that the materials and equipment comply with all contract requirements will be accepted. However, materials and equipment installed in hazardous locations must bear the UL label unless the data submitted from other testing agency is specifically approved in writing by the Contracting Officer. Items which are required to be listed and labeled in accordance with Underwriters Laboratories must be affixed with a UL label that states that it is UL listed. No exceptions or waivers will be granted to this requirement. Materials and equipment will be approved based on the manufacturer's published data.

For other than equipment and materials specified to conform to UL publications, a manufacturer's statement indicating complete compliance with the applicable standard of the American Society for Testing and Materials, National Electrical Manufacturers Association, or other commercial standard, is acceptable.

1.4 WORKMANSHIP

Materials and equipment shall be installed in accordance with NFPA 70, recommendations of the manufacturer, and as shown.

PART 2 PRODUCTS

Products shall conform to the respective publications and other requirements specified below. Materials and equipment not listed below shall be as specified elsewhere in this section. Items of the same classification shall be identical including equipment, assemblies, parts, and components.

2.1 BUSWAYS

UL 857. Busses shall be copper. Enclosures shall be steel. Short-circuit ratings, except as indicated, shall be in accordance with NEMA BU 1.

2.1.1 Plug-In Busways

Plug-in busways shall be unventilated. A hook stick of suitable length shall be provided for operating plug-in units from the floor. Plug-in units shall be of the handle-operated switch type equipped with high-interrupting-capacity current-limiting fuses.

2.2 CABLES AND WIRES

Conductors No. 8 AWG and larger diameter shall be stranded. Conductors No. 10 AWG and smaller diameter shall be solid, except that conductors for remote control, alarm, and signal circuits, classes 1, 2, and 3, shall be stranded unless specifically indicated otherwise. All conductors shall be copper only.

2.2.1 Equipment Manufacturer Requirements

When manufacturer's equipment requires copper conductors at the terminations or requires copper conductors to be provided between components of equipment, provide copper conductors or splices, splice boxes, and other work required to meet manufacturer's requirements.

2.2.2 Insulation

Unless indicated otherwise, or required by NFPA 70, power and lighting wires shall be 600-volt, Type THWN, THHN, or THW conforming to UL 83, except that grounding wire may be type TW conforming to UL 83; remote-control and signal circuits shall be Type TW, THW or TF, conforming to UL 83. Where lighting fixtures require 90-degree Centigrade (C) conductors, provide only conductors with 90-degree C insulation or better.

2.2.3 Bonding Conductors

ASTM B 1, solid bare copper wire for sizes No. 8 AWG and smaller diameter; ASTM B 8, Class B, stranded bare copper wire for sizes No. 6 AWG and larger diameter.

2.2.4 Cord Sets and Power-Supply Cords

UL 817.

2.3 CABLE TRAYS

NEMA VE 1 cable trays shall form a wireway system, and shall be of nominal 150 mm depth. Cable trays shall be constructed of aluminum. Trays shall

include splice and end plates, dropouts, and miscellaneous hardware. Edges, fittings, and hardware shall be finished free from burrs and sharp edges. Fittings shall have not less than the load-carrying ability of straight tray sections and shall have manufacturer's minimum standard radius. Radius of bends shall be 305 mm.

2.3.1 Ladder

Ladder-type cable trays shall be of nominal 300 mm width. Rung spacing shall be on 150 mm maximum centers.

2.4 CIRCUIT BREAKERS

2.4.1 MOLDED-CASE CIRCUIT BREAKERS

Molded-case circuit breakers shall conform to NEMA AB 1 and UL 489and UL 877for circuit breakers and circuit breaker enclosures located in hazardous locations. Circuit breakers may be installed in panelboards, switchboards, enclosures, motor control centers, or combination motor controllers.

2.4.1.1 Construction

Circuit breakers shall be suitable for mounting and operating in any position. Lug shall be listed for copper and aluminum conductors in accordance with UL 486E. Single-pole circuit breakers shall be full module size with not more than one pole per module. Multi-pole circuit breakers shall be of the common-trip type having a single operating handle such that an overload or short circuit on any one pole will result in all poles opening simultaneously. Sizes of 100 amperes or less may consist of single-pole breakers permanently factory assembled into a multi-pole unit having an internal, mechanical, nontamperable common-trip mechanism and external handle ties. All circuit breakers shall have a quick-make, quick-break overcenter toggle-type mechanism, and the handle mechanism shall be trip-free to prevent holding the contacts closed against a short-circuit or sustained overload. All circuit breaker handles shall assume a position between "ON" and "OFF" when tripped automatically. All ratings shall be clearly visible.

2.4.1.2 Ratings

Voltage ratings shall be not less than the applicable circuit voltage. The interrupting rating of the circuit breakers shall be at least equal to the available short-circuit current at the line terminals of the circuit breaker and correspond to the UL listed integrated short-circuit current rating specified for the panelboards and switchboards. Molded-case circuit breakers shall have nominal voltage ratings, maximum continuous-current ratings, and maximum short-circuit interrupting ratings in accordance with NEMA AB 1. Ratings shall be coordinated with system X/R ratio.

2.4.1.3 Thermal-Magnetic Trip Elements

Thermal magnetic circuit breakers shall be provided as shown. Automatic operation shall be obtained by means of thermal-magnetic tripping devices located in each pole providing inverse time delay and instantaneous circuit protection. The instantaneous magnetic trip shall be adjustable and accessible from the front of all circuit breakers on frame sizes above 150 amperes.

2.4.2 Solid-State Trip Elements

Solid-state circuit breakers shall be provided as shown. All electronics shall be self-contained and require no external relaying, power supply, or accessories. Printed circuit cards shall be treated to resist moisture absorption, fungus growth, and signal leakage. All electronics shall be housed in an enclosure which provides protection against arcs, magnetic interference, dust, and other contaminants. Solid-state sensing shall measure true RMS current with error less than one percent on systems with distortions through the 13th harmonic. Peak or average actuating devices are not acceptable. Current sensors shall be torodial construction, encased in a plastic housing filled with epoxy to protect against damage and moisture and shall be integrally mounted on the breaker. Where indicated on the drawings, circuit breaker frames shall be rated for 100 percent continuous duty. Circuit breakers shall have tripping features as shown on the drawings and as described below:

a. Long-time current pick-up, adjustable from 50 percent to 100 percent of continuous current rating.

b. Adjustable long-time delay.

c. Short-time current pick-up, adjustable from 1.5 to 9 times long-time current setting.

d. Adjustable short-time delay.

e. Short-time I square times t switch.

f. Instantaneous current pick-up, adjustable from 1.5 to 9 times long-time current setting.

g. Ground-fault pick-up, adjustable from 20 percent to 60 percent of sensor rating, but in no case greater than 1200 amperes. Sensing of ground-fault current at the main bonding jumper or ground strap shall not be permitted.

h. Adjustable ground-fault delay.

i. Ground-fault I square times t switch.

j. Overload and short-time and ground-fault trip indicators shall be provided.

2.4.3 Cuurent-Limiting Circuit Breakers

Current-limiting circuit breakers shall be provided as shown. Current-limiting circuit breakers shall limit the let-through I square times t to a value less than the I square times t of one-half cycle of the symmetrical short-circuit current waveform. On fault currents below the threshold of limitation, breakers shall provide conventional overload and short-circuit protection. Integrally-fused circuit breakers shall not be used.

2.4.4 Ground Fault Circuit Interrupters

UL 943. Breakers equipped with ground fault circuit interrupters shall have ground fault class, interrupting capacity, and voltage and current ratings as indicated.

2.5 MOTOR SHORT-CIRCUIT PROTECTOR (MSCP)

Motor short-circuit protectors shall conform to UL 508 and shall be provided as shown. Protectors shall be used only as part of a combination motor controller which provides coordinated motor branch-circuit overload and short-circuit protection, and shall be rated in accordance with the requirements of NFPA 70.

2.5.1 Construction

Motor short-circuit protector bodies shall be constructed of high temperature, dimensionally stable, long life, nonhygroscopic materials. Protectors shall fit special MSCP mounting clips and shall not be interchangeable with any commercially available fuses. Protectors shall have 100 percent one-way interchangeability within the A-Y letter designations. All ratings shall be clearly visible.

2.5.2 Ratings

Voltage ratings shall be not less than the applicable circuit voltage. Letter designations shall be A through Y for motor controller Sizes 0, 1, 2, 3, 4, and 5, with 100,000 amperes interrupting capacity rating. Letter designations shall correspond to controller sizes as follows:

CONTROLLER SIZE	MSCP DESIGNATION
NEMA O	A-N
NEMA 1	A-P
NEMA 2	A-S
NEMA 3	A-U
NEMA 4	A-W
NEMA 5	A-Y

2.6 CONDUIT AND TUBING

2.6.1 Electrical, Zinc-Coated Steel Metallic Tubing (EMT)

UL 797

2.6.2 Flexible Conduit, Steel and Plastic

General-purpose type, UL 1; liquid tight, UL 360, and UL 1660.

2.6.3 PVC Coated Rigid Steel Conduit

NEMA RN 1.

2.6.4 Rigid Metal Conduit

UL 6.

2.6.5 Rigid Plastic

NEMA TC 2, UL 651 and UL 651A.

2.6.6 Surface Metal Electrical Raceways and Fittings

UL 5.

2.7 CONDUIT AND DEVICE BOXES AND FITTINGS

2.7.1 Boxes, Metallic Outlet

NEMA OS 1 and UL 514C.

2.7.2 Boxes, Switch (Enclosed), Surface-Mounted

UL 98.

2.7.3 Fittings for Conduit and Outlet Boxes

UL 514B.

2.7.4 Fittings, PVC, for Use with Rigid PVC Conduit and Tubing

UL 514B.

2.8 CONNECTORS, WIRE PRESSURE

2.8.1 For Use With Copper Conductors

UL 486A.

2.9 ELECTRICAL GROUNDING AND BONDING EQUIPMENT

UL 467.

2.9.1 Ground Rods

Ground rods shall be of copper-clad steel conforming to UL 467 not less than 19.1 mm in diameter by 3.1 meter in length of the sectional type driven full length into the earth.

2.10 ENCLOSURES

NEMA ICS 6 for use in hazardous locations, unless otherwise specified.

2.10.1 Cabinets and Boxes

Cabinets and boxes with volume greater than 0.0164 cubic meters shall be in accordance with UL 50, hot-dip, zinc-coated, if sheet steel.

2.10.2 Circuit Breaker Enclosures

UL 489.

2.11 FIXTURES, LIGHTING AND FIXTURE ACCESSORIES/COMPONENTS

Standard Drawing 40-06-04 sheets referenced hereinafter and enclosed as an integral part of these specifications, additional fixtures shown on contract drawings, if any, and UL 844 for fixtures to be installed in hazardous (classified) locations. Fixtures, accessories and components, including ballasts, lampholders, lamps, starters and starter holders, shall conform to industry standards specified below.

2.11.1 Fixture, Auxiliary or Emergency

UL 924.

2.11.2 Fluorescent

a. Fixture: NEMA LE 4 for ceiling compatibility of recessed fixtures and UL 1570. Fixtures shall be plainly marked for proper lamp and ballast type to identify lamp diameter, wattage, color and start type. Marking shall be readily visible to service personnel, but not visible from normal viewing angles.

b. Ballasts:

(1) Magnetic ballast, energy-saving, high power factor, Class P, automatic-resetting Type, approved for the application by the Certified Ballast Manufacturers: ANSI C82.1 and UL 935. Two-lamp ballasts shall be used for each pair of lamps within a fixture or within continuous mounted fixtures. Single-lamp ballasts shall be used for individually mounted single-lamp fixtures and where an odd single-lamp fixture occurs at the end of a continuous group. Magnetic fluorescent lamp ballasts shall have a Ballast Efficacy Factor (BEF) not less than shown in the following table:

MAGNETIC FLUORESCENT BALLAST EFFICACY FACTORS*

Design starting temperature above 4.4 degrees C with 60 Hz input frequency

NUMBER OF LAMPS	LAMP TYPE	NOMINAL OPERATIONAL INPUT VOLTAGE	MAX. LAMP OPERATING CURRENT	MIN. BALLAST EFFICACY FACTOR
1	1.219 m (4 ft) rapid start	120 or 277	less than 1000 m amp	1.805
2	1.219 m	120	less than	1.060

	(4 ft) rapid start		1000 m amp	
2	1.219 m (4 ft) rapid start	277	less than 1000 m amp	1.050
2	2.438 m (8 ft) slim-line	120 - 277	less than 1000 m amp	0.570
2	2.438 m (8 ft) high output,	120 - 277	less than 1000 m amp rapid start	0.390

* For ballasts not specifically designed for use with dimming controls

The BEF is calculated using the formula:

BEF = Ballast Factor, (in percent) / Power Input

Where Power Input = Total Wattage of Combined Lamps and Ballasts.

(2) Electronic Ballast. Electronic ballasts shall consist of a rectifier, high frequency inverter, and power control and regulation circuitry. The ballasts shall be UL listed, Class P, with a Class A sound rating and shall contain no PCBs. Ballasts shall meet 47 CFR 18 for electromagnetic interference and shall not interfere with the operation of other electrical equipment. Design shall withstand line transients per IEEE C62.41, Category A. Unless otherwise indicated, the minimum number of ballasts shall be used to serve each individual fixture, using one, two, three or four lamp ballasts. A single ballast may be used to serve multiple fixtures if they are continuous mounted, factory manufactured for that installation with an integral wireway, and are identically controlled.

(a) Light output regulation shall be +/- 10%.

(b) Voltage input regulation shall be +/- 10%.

(c) Lamp current crest factor shall be no more than 1.6.

(d) Ballast factor shall be not less than 85% nor more than 100%, unless otherwise indicated.

(e) A 60 Hz filter shall be provided. Flicker shall be no more than 10% with any lamp suitable for the ballast.

(f) Ballast case temperature shall not exceed 25 degree Celsius rise above 40 degree Celsius ambient, when tested in accordance with UL 935.

(g) Total harmonic distortion shall be in the range of 10-20%.

(h) Power factor shall not be less than 0.95.

(i) Ballasts shall operate at a frequency of 20 kHz or more.

(j) Operating filament voltage shall be 2.5 to 4.5 volts.

(k) Warranty. Three year full warranty including a $10 labor allowance.

(l) Ballast Efficacy Factor (BEF) shall be in accordance with the following table. Ballasts and lamps shall be matching rapid start or instant start as indicated on the following table. If 32W-F32-T8 lamps and ballasts are used, they must be either all rapid start or all instant start.

ELECTRONIC FLUORESCENT BALLAST EFFICACY FACTORS*

LAMP TYPE	TYPE OF STARTER & LAMP	NOMINAL OPERATIONAL INPUT VOLTAGE	NUMBER OF LAMPS	MIN. BALLAST EFFICACY FACTOR
40W F40 T12	rapid start	120 or 277 V	1	2.3
			2	1.2
			3	0.8
			4	0.6
34W F40 T12	rapid start	120 or 277 V	1	2.6
			2	1.3
			3	1.0
			4	0.7
40W F40 T10	rapid start	120 or 277 V	1	2.2
			2	1.1
			3	0.8
32W F32 T8	rapid or instant start	120 or 277 V	1	2.4
			2	1.4
			3	1.0
			4	0.8

*For ballasts not specifically designed for use with dimming controls

The BEF is calculated using the formula:

BEF = Ballast Factor (in percent) / Power Input

Where Power Input = Total Wattage of Combined Lamps and Ballasts.

c. Lampholders, Starters, and Starter Holders: UL 542.

2.11.3 High-Intensity-Discharge

a. Fixture: NEMA LE 4 for ceiling compatibility of recessed fixtures and UL 1572.

b. Ballasts: ANSI C82.4 for multiple supply types and UL 1029.

2.12 LOW-VOLTAGE FUSES AND FUSEHOLDERS

2.12.1 Fuses, Low Voltage Cartridge Type

NEMA FU 1.

2.12.2 Fuses, High-Interrupting-Capacity, Current-Limiting Type

Fuses, Class G, J, L and CC shall be in accordance with UL 198C.

2.12.3 Fuses, Class R

UL 198E.

2.12.4 Fuseholders

UL 512.

2.13 INSTRUMENTS, ELECTRICAL INDICATING

ANSI C39.1.

2.14 MOTORS, AC, FRACTIONAL AND INTEGRAL

Motors, ac, fractional and integral kilowatt, 373.0 kW and smaller shall conform to NEMA MG 1 and UL 1004for motors; NEMA MG 10 for energy management selection of polyphase motors.

2.15 MOTOR CONTROLS AND MOTOR CONTROL CENTERS

2.15.1 General

NEMA ICS 1, NEMA ICS 2, NEMA ICS 3 and NEMA ICS 6, and UL 508 and UL 845. Panelboards supplying non-linear loads shall have neutrals sized for 200 percent of rated current.

2.15.2 Motor Starters

Combination starters shall be provided with circuit breakers.

2.15.3 Thermal-Overload Protection

Each motor of 93 W (1/8 hp) or larger shall be provided with thermal-overload protection. Polyphase motors shall have overload protection in each ungrounded conductor. The overload-protection device shall be provided either integral with the motor or controller, or shall be mounted in a separate enclosure. Unless otherwise specified, the protective device shall be of the manually reset type. Single or double pole tumbler switches specifically designed for alternating-current operation only may be used as

manual controllers for single-phase motors having a current rating not in excess of 80 percent of the switch rating.

2.15.4 Low-Voltage Motor Overload Relays

2.15.4.1 General

Thermal and magnetic current overload relays shall conform to NEMA ICS 2 and UL 508. Overload protection shall be provided either integral with the motor or motor controller, and shall be rated in accordance with the requirements of NFPA 70. Standard units shall be used for motor starting times up to 7 seconds.

2.15.4.2 Construction

Manual reset type thermal relay shall be bimetallic construction. Automatic reset type thermal relays shall be bimetallic construction. Magnetic current relays shall consist of a contact mechanism and a dash pot mounted on a common frame.

2.15.4.3 Ratings

Voltage ratings shall be not less than the applicable circuit voltage. Trip current ratings shall be established by selection of the replaceable overload device and shall not be adjustable. Where the controller is remotely-located or difficult to reach, an automatic reset, non-compensated overload relay shall be provided. Manual reset overload relays shall be provided otherwise, and at all locations where automatic starting is provided. Where the motor is located in a constant ambient temperature, and the thermal device is located in an ambient temperature that regularly varies by more than minus 10 degrees C, an ambient temperature-compensated overload relay shall be provided.

2.15.5 Automatic Control Devices

2.15.5.1 Direct Control

Automatic control devices (such as thermostats, float or pressure switches) which control the starting and stopping of motors directly shall be designed for that purpose and have an adequate kilowatt rating.

2.15.5.2 Pilot-Relay Control

Where the automatic-control device does not have such a rating, a magnetic starter shall be used, with the automatic-control device actuating the pilot-control circuit.

2.15.5.3 Manual/Automatic Selection

a. Where combination manual and automatic control is specified and the automatic-control device operates the motor directly, a double-throw, three-position tumbler or rotary switch (marked MANUAL-OFF-AUTOMATIC) shall be provided for the manual control.

b. Where combination manual and automatic control is specified and the automatic-control device actuates the pilot control circuit of a

magnetic starter, the magnetic starter shall be provided with a three-position selector switch marked MANUAL-OFF-AUTOMATIC.

c. Connections to the selector switch shall be such that; only the normal automatic regulatory control devices will be bypassed when the switch is in the Manual position; all safety control devices, such as low-or high-pressure cutouts, high-temperature cutouts, and motor-overload protective devices, shall be connected in the motor-control circuit in both the Manual and the Automatic positions of the selector switch. Control circuit connections to any MANUAL-OFF-AUTOMATIC switch or to more than one automatic regulatory control device shall be made in accordance with wiring diagram approved by the Contracting Officer unless such diagram is included on the drawings. All controls shall be 120 volts or less unless otherwise indicated.

2.15.6 Motor Control Centers

Control centers shall conform to the requirements of NEMA ICS 1, NEMA ICS 2, NEMA ICS 3 and NEMA ICS 6, and UL 508 and UL 845. Control centers shall be indoor type and shall contain combination starters and other equipment as indicated. Control centers shall be NEMA ICS 2, Class i, Type II. Each control center shall be mounted on floor sills or mounting channels. Each circuit shall have a suitable metal or laminated plastic nameplate with white cut letters. Motor control centers shall be provided with a full-length ground bus bar.

2.16 PANELBOARDS

Dead-front construction, NEMA PB 1 and UL 67.

2.17 RECEPTACLES

2.17.1 Standard Grade

UL 498.

2.17.2 Ground Fault Interrupters

UL 943, Class A or B.

2.17.3 NEMA Standard Receptacle Configurations

NEMA WD 6.

a. Single and Duplex, 15-Ampere and 20-Ampere, 125 Volt
15-ampere, non-locking: NEMA type 5-15R, locking: NEMA type L5-15R, 20-ampere, non-locking: NEMA type 5-20R, locking: NEMA type L5-20R.

b. 15-Ampere, 250 Volt

Two-pole, 3-wire grounding, non-locking: NEMA type 6-15R, locking: NEMA type L6-15R. Three-pole, 4-wire grounding, non-locking: NEMA type 15-15R, locking: NEMA type L15-15R.

c. 20-Ampere, 250 Volt

Two-pole, 3-wire grounding, non-locking: NEMA type 6-20R, locking: NEMA type L6-20R. Three-pole, 4-wire grounding, non-locking: NEMA type 15-20R, locking: NEMA type L15-20R.

d. 30-Ampere, 125/250 Volt

Three-pole, 3-wire, non-locking: NEMA type 10-30R, locking: NEMA type L10-30R. Three-pole, 4-wire grounding, non-locking: NEMA type 14-30R, locking: NEMA type L14-30R.

e. 30-Ampere, 250 Volt

Two-pole, 3-wire grounding, non-locking: NEMA type 6-30R, locking: NEMA type L6-30R. Three-pole, 4-wire grounding, non-locking: NEMA type 15-30R, locking: NEMA type L15-30R.

f. 50-Ampere, 125/250 Volt

Three-pole, 3-wire: NEMA type 10-50R. Three-pole, 4-wire grounding: NEMA type 14-50R.

2.18 SERVICE ENTRANCE EQUIPMENT

UL 869A.

2.19 SPLICE, CONDUCTOR

UL 486C.

2.20 POWER-SWITCHGEAR ASSEMBLIES INCLUDING SWITCHBOARDS

Assemblies shall be metal-enclosed, freestanding general-purpose ventilated type in accordance with NEMA PB 2, UL 891, and IEEE C37.20.1 and shall be installed to provide front and rear access. Busses shall be copper. Assembly shall be approximately 2.3 meters high; arrangement of circuit breakers and other items specified shall be as indicated. The withstand rating and interrupting capacity of the switchboards and circuit breakers shall be based on the maximum fault current available.

2.20.1 Circuit Breakers

Circuit breakers shall be molded-case circuit breakers.

2.20.2 Auxiliary Equipment

2.20.2.1 Control Power Sources

Control buses and control power transformers shall conform to the requirements of Section 16311 MAIN ELECTRIC SUPPLY STATION AND SUBSTATION, where required. Control power shall be 120-volt AC.

2.21 SNAP SWITCHES

UL 20.

2.22 TAPES

2.22.1 Plastic Tape

UL 510.

2.22.2 Rubber Tape

UL 510.

2.23 TRANSFORMERS

Single- and three-phase transformers shall have two windings per phase. Full-capacity standard NEMA taps shall be provided in the primary windings of transformers unless otherwise indicated. Three-phase transformers shall be configured with delta-wye windings, except as indicated. "T" connections may be used for transformers rated 15 kVA or below. Transformers supplying non-linear loads shall be UL listed as suitable for supplying such loads with a total K-factor not to exceed K-9 and have neutrals sized for 200 percent of rated current.

2.23.1 Transformers, Dry-Type

Transformers shall have 220 degrees C insulation system for transformers 15 kVA and greater, and shall have 180 degrees C insulation system for transformers rated 10 kVA and less, with temperature rise not exceeding 150 degrees C under full-rated load in maximum ambient temperature of 40 degrees C. Transformer of 150 degrees C temperature rise shall be capable of carrying continuously 100 percent of nameplate kVA without exceeding insulation rating.

a. 600 Volt or Less Primary:

NEMA ST 20, UL 506, general purpose, dry-type, self-cooled, ventilated unventilated sealed epoxy-resin cast coil. Provide transformers in NEMA 1 enclosure.

2.23.2 Average Sound Level

The average sound level in decibels (dB) of transformers shall not exceed the following dB level at 300 mm for the applicable kVA rating range listed unless otherwise indicated:

kVA Range	dB Sound Level
1-50	50
51-150	55
151-300	58
301-500	60
501-700	62
701-1000	64
1001-1500	65
1501 & above	70

2.24 WATTHOUR/DEMAND METERS, CHECK

ANSI C12.10 for self-contained watthour-demand meter with pulse-initiators for remote monitoring of watt-hour usage and instantaneous demand. Meter shall be Class 200 as indicated.

2.25 WIRING DEVICES

NEMA WD 1 for wiring devices, and NEMA WD 6 for dimensional requirements of wiring devices.

PART 3 EXECUTION

3.1 GROUNDING

Grounding shall be in conformance with NFPA 70, the contract drawings, and the following specifications.

3.1.1 Ground Rods

The resistance to ground shall be measured using the fall-of-potential method described in IEEE Std 81. The maximum resistance of a driven ground shall not exceed 25 ohms under normally dry conditions. If this resistance cannot be obtained with a single rod, additional rods not less than 1.8 meters on centers, or if sectional type rods are used, additional sections may be coupled and driven with the first rod. In high-ground-resistance, UL listed chemically charged ground rods may be used. If the resultant resistance exceeds 25 ohms measured not less than 48 hours after rainfall, the Contracting Officer shall be notified immediately. Connections below grade shall be fusion welded. Connections above grade shall be fusion welded or shall use UL 467 approved connectors.

3.1.2 Grounding Conductors

All equipment grounding conductors, including metallic raceway systems used as such, shall be bonded or joined together in each wiring box or equipment enclosure. Metallic raceways and grounding conductors shall be checked to assure that they are wired or bonded into a common junction. Metallic boxes and enclosures, if used, shall also be bonded to these grounding conductors by an approved means per NFPA 70. When boxes for receptacles, switches, or other utilization devices are installed, any designated grounding terminal on these devices shall also be bonded to the equipment grounding conductor junction with a short jumper.

3.2 WIRING METHODS

Wiring shall conform to NFPA 70, the contract drawings, and the following specifications. Unless otherwise indicated, wiring shall consist of insulated conductors installed in rigid zinc-coated steel conduit electrical metallic tubing conduit. Where cables and wires are installed in cable trays, they shall be of the type permitted by NFPA 70 for use in such applications.

3.2.1 Conduit and Tubing Systems

Conduit and tubing systems shall be installed as indicated. Conduit sizes shown are based on use of copper conductors with insulation types as described in paragraph WIRING METHODS. Minimum size of raceways shall be 15 mm. Only metal conduits will be permitted when conduits are required for

shielding or other special purposes indicated, or when required by conformance to NFPA 70. Nonmetallic conduit and tubing may be used in damp, wet or corrosive locations when permitted by NFPA 70 and the conduit or tubing system is provided with appropriate boxes, covers, clamps, screws or other appropriate type of fittings. Electrical metallic tubing (EMT) may be installed only within buildings. EMT may be installed in concrete and grout in dry locations. EMT installed in concrete or grout shall be provided with concrete tight fittings. EMT shall not be installed in damp or wet locations, or the air space of exterior masonry cavity walls. Bushings, manufactured fittings or boxes providing equivalent means of protection shall be installed on the ends of all conduits and shall be of the insulating type, where required by NFPA 70. Only UL listed adapters shall be used to connect EMT to rigid metal conduit, cast boxes, and conduit bodies. Aluminum conduit may be used only where installed exposed in dry locations. Nonaluminum sleeves shall be used where aluminum conduit passes through concrete floors and firewalls. Penetrations of above grade floor slabs, time-rated partitions and fire walls shall be firestopped in accordance with Section 07270 FIRESTOPPING. Except as otherwise specified, IMC may be used as an option for rigid steel conduit in areas as permitted by NFPA 70. Raceways shall not be installed under the firepits of boilers and furnaces and shall be kept 150 mm away from parallel runs of flues, steam pipes and hot-water pipes. Raceways shall be concealed within finished walls, ceilings, and floors unless otherwise shown. Raceways crossing structural expansion joints or seismic joints shall be provided with suitable expansion fittings or other suitable means to compensate for the building expansion and contraction and to provide for continuity of grounding. Wiring installed in underfloor duct system underfloor raceway system shall be suitable for installation in wet locations.

3.2.1.1 Pull Wires

A pull wire shall be inserted in each empty raceway in which wiring is to be installed if the raceway is more than 15 meters in length and contains more than the equivalent of two 90-degree bends, or where the raceway is more than 45 meters in length. The pull wire shall be of No. 14 AWG zinc-coated steel, or of plastic having not less than 1.4 MPa (200 psi) tensile strength. Not less than 254 mm of slack shall be left at each end of the pull wire.

3.2.1.2 Conduit Stub-Ups

Where conduits are to be stubbed up through concrete floors, a short elbow shall be installed below grade to transition from the horizontal run of conduit to a vertical run. A conduit coupling fitting, threaded on the inside shall be installed, to allow terminating the conduit flush with the finished floor. Wiring shall be extended in rigid threaded conduit to equipment, except that where required, flexible conduit may be used 150 mm above the floor. Empty or spare conduit stub-ups shall be plugged flush with the finished floor with a threaded, recessed plug.

3.2.1.3 Below Slab-on-Grade or in the Ground

Electrical wiring below slab-on-grade shall be protected by a conduit system. Conduit passing vertically through slabs-on-grade shall be rigid steel or IMC. Rigid steel or IMC conduits installed below slab-on-grade or in the earth shall be field wrapped with 0.254 mm thick pipe-wrapping

plastic tape applied with a 50 percent overlay, or shall have a factory-applied polyvinyl chloride, plastic resin, or epoxy coating system.

3.2.1.4 Installing in Slabs Including Slabs on Grade

Conduit installed in slabs-on-grade shall be rigid steel or IMC. Conduits shall be installed as close to the middle of concrete slabs as practicable without disturbing the reinforcement. Outside diameter shall not exceed 1/3 of the slab thickness and conduits shall be spaced not closer than 3 diameters on centers except at cabinet locations where the slab thickness shall be increased as approved by the Contracting Officer. Where conduit is run parallel to reinforcing steel, the conduit shall be spaced a minimum of one conduit diameter away but not less than 25.4 mm from the reinforcing steel.

3.2.1.5 Changes in Direction of Runs

Changes in direction of runs shall be made with symmetrical bends or cast-metal fittings. Field-made bends and offsets shall be made with an approved hickey or conduit-bending machine. Crushed or deformed raceways shall not be installed. Trapped raceways in damp and wet locations shall be avoided where possible. Care shall be taken to prevent the lodgment of plaster, dirt, or trash in raceways, boxes, fittings and equipment during the course of construction. Clogged raceways shall be cleared of obstructions or shall be replaced.

3.2.1.6 Supports

Except where otherwise permitted by NFPA 70, conduits and tubing shall be securely and rigidly fastened in place at intervals of not more than 3 meters and within 900 mm of boxes, cabinets, and fittings, with approved pipe straps, wall brackets, conduit clamps, conduit hangers, threaded C-clamps, beam clamps, or ceiling trapeze. Loads and supports shall be coordinated with supporting structure to prevent damage or deformation to the structure. Loads shall not be applied to joist bridging. Attachment shall be by wood screws or screw-type nails to wood; by toggle bolts on hollow masonry units; by expansion bolts on concrete or brick; by machine screws, welded threaded studs, heat-treated or spring-steel-tension clamps on steel work. Nail-type nylon anchors or threaded studs driven in by a powder charge and provided with lock washers and nuts may be used in lieu of expansion bolts or machine screws. Raceways or pipe straps shall not be welded to steel structures. Cutting the main reinforcing bars in reinforced concrete beams or joists shall be avoided when drilling holes for support anchors. Holes drilled for support anchors, but not used, shall be filled. In partitions of light steel construction, sheet-metal screws may be used. Raceways shall not be supported using wire or nylon ties. Raceways shall be independently supported from the structure. Upper raceways shall not be used as a means of support for lower raceways. Supporting means will not be shared between electrical raceways and mechanical piping or ducts. Cables and raceways shall not be supported by ceiling grids. Except where permitted by NFPA 70, wiring shall not be supported by ceiling support systems. Conduits shall be fastened to sheet-metal boxes and cabinets with two locknuts where required by NFPA 70, where insulating bushings are used, and where bushings cannot be brought into firm contact with the box; otherwise, a single locknut and bushing may be used. Threadless fittings for electrical metallic tubing shall be of a type approved for the

conditions encountered. Additional support for horizontal runs is not required when EMT rests on steel stud cutouts.

3.2.1.7 Exposed Raceways

Exposed raceways shall be installed parallel or perpendicular to walls, structural members, or intersections of vertical planes and ceilings. Raceways under raised floors and above accessible ceilings shall be considered as exposed installations in accordance with NFPA 70definitions.

3.2.1.8 Communications Raceways

Communications raceways indicated shall be installed in accordance with the previous requirements for conduit and tubing and with the additional requirements that no length of run shall exceed 15 meters for 15 mm and 20 mm sizes, and 30 meters for 25 mm or larger sizes, and shall not contain more than two 90-degrees bends or the equivalent. Additional pull or junction boxes shall be installed to comply with these limitations whether or not indicated. Inside radii of bends in conduits of 25 mm (1 inch) size or larger shall not be less than ten times the nominal diameter.

3.2.2 Busway Systems

Busway systems shall be of the voltage, capacity, and phase characteristics indicated. Vertical runs of busways within 1.8 meters of the floor shall have solid enclosures. Busways shall be supported at intervals not exceeding 1.5 meters, and shall be braced properly to prevent lateral movement. Busways penetrating walls or floors shall be provided with flanges to completely close wall or floor openings.

3.2.3 Cable Trays

Cable trays shall be supported in accordance with the recommendations of the manufacturer but at no more than 1.8 meter intervals. Contact surfaces of aluminum connections shall be coated with an antioxidant compound prior to assembly. Adjacent cable tray sections shall be bonded together by connector plates of an identical type as the cable tray sections. The Contractor shall submit the manufacturer's certification that the cable tray system meets all requirements of Article 318 of NFPA 70. The cable tray shall be installed and grounded in accordance with the provisions of Article 318 of NFPA 70. Data submitted by the Contractor shall demonstrate that the completed cable tray systems will comply with the specified requirements. Cable trays shall terminate 250 mm from both sides of smoke and fire partitions. Conductors run through smoke and fire partitions shall be installed in 103 mm (4 inch) rigid steel conduits with grounding bushings, extending 300 mm beyond each side of the partitions. The installation shall be sealed to preserve the smoke and fire rating of the partitions. Penetrations shall be firestopped in accordance with Section 07270 FIRESTOPPING.

3.2.4 Cables and Conductors

3.2.4.1 Sizing

Unless otherwise noted, all sizes are based on copper conductors and the insulation types indicated. Sizes shall be not less than indicated. Branch-circuit conductors shall be not smaller than No. 12 AWG. Conductors

for branch circuits of 120 volts more than 30 meters long and of 277 volts more than 70 meters long, from panel to load center, shall be no smaller than No. 10 AWG. Class 1 remote control and signal circuit conductors shall be not less than No. 14 AWG. Class 2 remote control and signal circuit conductors shall be not less than No. 16 AWG. Class 3 low-energy, remote-control and signal circuits shall be not less than No. 22 AWG.

3.2.4.2 Conductor Identification and Tagging

Power, control, and signal circuit conductor identification shall be provided within each enclosure where a tap, splice, or termination is made. Where several feeders pass through a common pull box, the feeders shall be tagged to indicate clearly the electrical characteristics, circuit number, and panel designation. Phase conductors of low voltage power circuits shall be identified by color coding. Phase identification by a particular color shall be maintained continuously for the length of a circuit, including junctions.

a. Color coding shall be provided for service, feeder, branch, and ground conductors. Color shall be green for grounding conductors and white for neutrals; except where neutrals of more than one system are installed in the same raceway or box, other neutral shall be white with colored (not green) stripe. The color coding for three-phase and single-phase low voltage systems shall be as follows:

120/208-volt, 3-phase: Black(A), red(B), and blue(C).
277/480-volt, 3-phase: Brown(A), orange(B), and yellow(C).
120/240-volt, 1-phase: Black and red.

b. Conductor phase and voltage identification shall be made by color-coded insulation for all conductors smaller than No. 6 AWG. For conductors No. 6 AWG and larger, identification shall be made by color-coded insulation, or conductors with black insulation may be furnished and identified by the use of half-lapped bands of colored electrical tape wrapped around the insulation for a minimum of 75 mm of length near the end, or other method as submitted by the Contractor and approved by the Contracting Officer.

c. Control and signal circuit conductor identification shall be made by color-coded insulated conductors, plastic-coated self-sticking printed markers, permanently attached stamped metal foil markers, or equivalent means as approved. Control circuit terminals of equipment shall be properly identified. Terminal and conductor identification shall match that shown on approved detail drawings. Hand lettering or marking is not acceptable.

3.3 BOXES AND SUPPORTS

Boxes shall be provided in the wiring or raceway systems where required by NFPA 70 for pulling of wires, making connections, and mounting of devices or fixtures. Pull boxes shall be furnished with screw-fastened covers. Indicated elevations are approximate, except where minimum mounting heights for hazardous areas are required by NFPA 70. Unless otherwise indicated, boxes for wall switches shall be mounted 1.2 meters above finished floors. Switch and outlet boxes located on opposite sides of fire rated walls shall be separated by a minimum horizontal distance of 600 mm. The total combined

area of all box openings in fire rated walls shall not exceed 0.0645 square meters per 9.3 square meters. Maximum box areas for individual boxes in fire rated walls vary with the manufacturer and must not exceed the maximum specified for that box in UL-03. Only boxes listed in UL-03 shall be used in fire rated walls.

3.3.1 Box Applications

Each box shall have not less than the volume required by NFPA 70 for number of conductors enclosed in box. Boxes for metallic raceways, 102 by 102 mm nominal size and smaller, shall be of the cast-metal hub type when located in normally wet locations, when flush and surface mounted on outside of exterior surfaces, or when located in hazardous areas. Cast-metal boxes installed in wet locations and boxes installed flush with the outside of exterior surfaces shall be gasketed. Boxes for mounting lighting fixtures shall be not less than 102 mm square, or octagonal, except smaller boxes may be installed as required by fixture configuration, as approved. Cast-metal boxes with 2.4 mm wall thickness are acceptable. Large size boxes shall be NEMA 1 or as shown. Boxes in other locations shall be sheet steel except that aluminum boxes may be used with aluminum conduit, and nonmetallic boxes may be used with nonmetallic conduit and tubing or nonmetallic sheathed cable system, when permitted by NFPA 70. Boxes for use in masonry-block or tile walls shall be square-cornered, tile-type, or standard boxes having square-cornered, tile-type covers.

3.3.2 Brackets and Fasteners

Boxes and supports shall be fastened to wood with wood screws or screw-type nails of equal holding strength, with bolts and metal expansion shields on concrete or brick, with toggle bolts on hollow masonry units, and with machine screw or welded studs on steel work. Threaded studs driven in by powder charge and provided with lockwashers and nuts, or nail-type nylon anchors may be used in lieu of expansion shields, or machine screws. Penetration of more than 38.1 mm (1-1/2 inches) into reinforced-concrete beams or more than 19.1 mm (3/4 inch) into reinforced-concrete joists shall avoid cutting any main reinforcing steel. The use of brackets which depend on gypsum wallboard or plasterboard for primary support will not be permitted. In partitions of light steel construction, bar hangers with 25 mm long studs, mounted between metal wall studs or metal box mounting brackets shall be used to secure boxes to the building structure. When metal box mounting brackets are used, additional box support shall be provided on the side of the box opposite the brackets. This additional box support shall consist of a minimum 300 mm long section of wall stud, bracketed to the opposite side of the box and secured by two screws through the wallboard on each side of the stud. Metal screws may be used in lieu of the metal box mounting brackets.

3.3.3 Mounting in Walls, Ceilings, or Recessed Locations

In walls or ceilings of concrete, tile, or other non-combustible material, boxes shall be installed so that the edge of the box is not recessed more than 6 mm from the finished surface. Boxes mounted in combustible walls or ceiling material shall be mounted flush with the finished surface. The use of gypsum or plasterboard as a means of supporting boxes will not be permitted. Boxes installed for concealed wiring shall be provided with suitable extension rings or plaster covers, as required. The bottom of boxes installed in masonry-block walls for concealed wiring shall be mounted

flush with the top of a block to minimize cutting of the blocks, and boxes shall be located horizontally to avoid cutting webs of block. Separate boxes shall be provided for flush or recessed fixtures when required by the fixture terminal operating temperature, and fixtures shall be readily removable for access to the boxes unless ceiling access panels are provided.

3.3.4 Installation in Overhead Spaces

In open overhead spaces, cast-metal boxes threaded to raceways need not be separately supported except where used for fixture support; cast-metal boxes having threadless connectors and sheet metal boxes shall be supported directly from the building structure or by bar hangers. Hangers shall not be fastened to or supported from joist bridging. Where bar hangers are used, the bar shall be attached to raceways on opposite sides of the box and the raceway shall be supported with an approved type fastener not more than 600 mm from the box.

3.4 DEVICE PLATES

One-piece type device plates shall be provided for all outlets and fittings. Plates on unfinished walls and on fittings shall be of zinc-coated sheet steel, cast-metal, or impact resistant plastic having rounded or beveled edges. Plates on finished walls shall be of steel with baked enamel finish or impact-resistant plastic and shall be ivory. Screws shall be of metal with countersunk heads, in a color to match the finish of the plate. Plates shall be installed with all four edges in continuous contact with finished wall surfaces without the use of mats or similar devices. Plaster fillings will not be permitted. Plates shall be installed with an alignment tolerance of 1.6 mm. The use of sectional-type device plates will not be permitted. Plates installed in wet locations shall be gasketed and provided with a hinged, gasketed cover, unless otherwise specified.

3.5 RECEPTACLES

3.5.1 Single and Duplex, 15 or 20-ampere, 125 volt

Single and duplex receptacles shall be rated 20 amperes, 125 volts, two-pole, three-wire, grounding type with polarized parallel slots. Bodies shall be of ivory to match color of switch handles in the same room or to harmonize with the color of the respective wall, and supported by mounting strap having plaster ears. Contact arrangement shall be such that contact is made on two sides of an inserted blade. Receptacle shall be side- or back-wired with two screws per terminal. The third grounding pole shall be connected to the metal mounting yoke. Switched receptacles shall be the same as other receptacles specified except that the ungrounded pole of each suitable receptacle shall be provided with a separate terminal. Only the top receptacle of a duplex receptacle shall be wired for switching application. Receptacles with ground fault circuit interrupters shall have the current rating as indicated, and shall be UL Class A type unless otherwise shown. Ground fault circuit protection shall be provided as required by NFPA 70 and as indicated on the drawings.

3.5.2 Weatherproof Applications

Weatherproof receptacles shall be suitable for the environment, damp or wet as applicable, and the housings shall be labeled to identify the allowable use. Receptacles shall be marked in accordance with UL 514A for the type of

use indicated; "Damp locations", "Wet Locations", "Wet Location Only When Cover Closed". Assemblies shall be installed in accordance with the manufacturer's recommendations.

3.5.2.1 Damp Locations

Receptacles in damp locations shall be mounted in an outlet box with a gasketed, weatherproof, cast-metal cover plate (device plate, box cover) and a gasketed cap (hood, receptacle cover) over each receptacle opening. The cap shall be either a screw-on type permanently attached to the cover plate by a short length of bead chain or shall be a flap type attached to the cover with a spring loaded hinge.

3.5.2.2 Wet Locations

Receptacles in wet locations shall be installed in an assembly rated for such use whether the plug is inserted or withdrawn, unless otherwise indicated. In a duplex installation, the receptacle cover shall be configured to shield the connections whether one or both receptacles are in use. Assemblies which utilize a self-sealing boot or gasket to maintain wet location rating shall be furnished with a compatible plug at each receptacle location and a sign notifying the user that only plugs intended for use with the sealing boot shall be connected during wet conditions.

3.5.3 Receptacles, 30-Ampere, 125/250-Volt

Receptacles, single, 30-ampere, 125/250-volt, shall be molded-plastic, three-pole, four-wire, grounding type, complete with appropriate mating cord-grip type attachment plug. Each dryer receptacle shall be furnished with a non-detachable power supply cord for connection to the electric clothes dryer. The cord shall be an angle-type 900 mm length of Type SRD range and dryer cable with three No. 10 AWG conductors.

3.5.4 Receptacles, 50-Ampere, 250-Volt

Receptacles, single, 50-ampere, 250-volt, shall be flush molded plastic, three-pole, three-wire type, complete with appropriate mating cord-grip plug.

3.6 WALL SWITCHES

Wall switches shall be of the totally enclosed tumbler type. The wall switch handle and switch plate color shall be ivory. Wiring terminals shall be of the screw type or of the solderless pressure type having suitable conductor-release arrangement. Not more than one switch shall be installed in a single-gang position. Switches shall be rated 20-ampere 120 277-volt for use on alternating current only. Pilot lights indicated shall consist of yoke-mounted candelabra-base sockets rated at 75 watts, 125 volts, and fitted with glass or plastic jewels. A clear 6-watt lamp shall be furnished and installed in each pilot switch. Jewels for use with switches controlling motors shall be green, and jewels for other purposes shall be red. Dimming switches shall be solid-state flush mounted, sized for the loads.

3.7 SERVICE EQUIPMENT

Service-disconnecting means shall be of the enclosed molded-case circuit breaker type with an external handle for manual operation. When service disconnecting means is a part of an assembly, the assembly shall be listed as suitable for service entrance equipment. Enclosures shall be sheet metal with hinged cover for surface mounting unless otherwise indicated.

3.8 PANELBOARDS AND LOADCENTERS

Circuit breakers and switches used as a motor disconnecting means shall be capable of being locked in the open position. Door locks shall be keyed alike. Nameplates shall be as approved. Directories shall be typed to indicate loads served by each circuit and mounted in a holder behind a clear protective covering. Busses shall be copper.

3.8.1 Panelboards

Panelboards shall be circuit breaker or fusible switch equipped as indicated on the drawings.

3.9 FUSES

Equipment provided under this contract shall be provided with a complete set of properly rated fuses when the equipment manufacturer utilize fuses in the manufacture of the equipment, or if current-limiting fuses are required to be installed to limit the ampere-interrupting capacity of circuit breakers or equipment to less than the maximum available fault current at the location of the equipment to be installed. Fuses shall have a voltage rating of not less than the phase-to-phase circuit voltage, and shall have the time-current characteristics required for effective power system coordination. Time-delay and non-time-delay options shall be as specified.

3.9.1 Cartridge Fuses; Current-Limiting Type

Cartridge fuses, current-limiting type, Class RK1 RK5 shall have tested interrupting capacity not less than 100,000 amperes. Fuse holders shall be the type that will reject all Class H fuses.

3.9.2 Motor and Transformer Circuit Fuses

Motor, motor controller, transformer, and inductive circuit fuses shall be Class RK1 or RK5, current-limiting, time-delay with 200,000 amperes interrupting capacity.

3.10 MOTORS

Each motor shall conform to the kW and voltage ratings indicated, and shall have a service factor and other characteristics that are essential to the proper application and performance of the motors under conditions shown or specified. Three-phase motors for use on 3-phase 208-volt systems shall have a nameplate rating of 200 volts. Unless otherwise specified, all motors shall have open frames, and continuous-duty classification based on a 40 degree C ambient temperature reference. Polyphase motors shall be squirrel-cage type, having normal-starting-torque and low-starting-current characteristics, unless other characteristics are specified in other sections of these specifications or shown on contract drawings. The Contractor shall be responsible for selecting the actual kilowatt (horsepower) ratings and other motor requirements necessary for the

applications indicated. When electrically driven equipment furnished under other sections of these specifications materially differs from the design, the Contractor shall make the necessary adjustments to the wiring, disconnect devices and branch-circuit protection to accommodate the equipment actually installed.

3.11 MOTOR CONTROL

Each motor or group of motors requiring a single control and not controlled from a motor-control center shall be provided under other sections of these specifications with a suitable controller and devices that will perform the functions as specified for the respective motors. Each motor of 93 W (1/8 hp) or larger shall be provided with thermal-overload protection. Polyphase motors shall have overload protection in each ungrounded conductor. The overload-protection device shall be provided either integral with the motor or controller, or shall be mounted in a separate enclosure. Unless otherwise specified, the protective device shall be of the manually reset type. Single or double pole tumbler switches specifically designed for alternating-current operation only may be used as manual controllers for single-phase motors having a current rating not in excess of 80 percent of the switch rating. Automatic control devices such as thermostats, float or pressure switches may control the starting and stopping of motors directly, provided the devices used are designed for that purpose and have an adequate kilowatt rating. When the automatic-control device does not have such a rating, a magnetic starter shall be used, with the automatic-control device actuating the pilot-control circuit. When combination manual and automatic control is specified and the automatic-control device operates the motor directly, a double-throw, three-position tumbler or rotary switch shall be provided for the manual control; when the automatic-control device actuates the pilot control circuit of a magnetic starter, the latter shall be provided with a three-position selector switch marked MANUAL-OFF-AUTOMATIC. Connections to the selector switch shall be such that only the normal automatic regulatory control devices will be bypassed when the switch is in the Manual position; all safety control devices, such as low- or high-pressure cutouts, high-temperature cutouts, and motor-overload protective devices, shall be connected in the motor-control circuit in both the Manual and the Automatic positions of the selector switch. Control circuit connections to any MANUAL-OFF-AUTOMATIC switch or to more than one automatic regulatory control device shall be made in accordance with wiring diagram approved by the Contracting Officer unless such diagram is included on the drawings. All controls shall be 120 volts or less unless otherwise indicated.

3.11.1 Motor Control Centers

Control centers shall be indoor type and shall contain combination starters and other equipment as indicated. Control centers shall be NEMA ICS 2, Class I, Type II. Each control center shall be mounted on floor sills or mounting channels. Each circuit shall have a suitable metal or laminated plastic nameplate with white cut letters. Combination starters shall be provided with circuit breakers. Motor control centers shall be provided with a full-length ground bus bar.

3.11.2 Contacts

Unless otherwise indicated, contacts in miscellaneous control devices such as float switches, pressure switches, and auxiliary relays shall have

current and voltage ratings in accordance with NEMA ICS 2 for rating designation B300.

3.11.3 Safety Controls

Safety controls for boilers shall be connected to a 2-wire, 120 volt grounded circuit supplied from the associated boiler-equipment circuit. Where the boiler circuit is more than 120 volts to ground, safety controls shall be energized through a two-winding transformer having its 120 volt secondary winding grounded. Overcurrent protection shall be provided in the ungrounded secondary conductor and shall be sized for the load encountered.

3.12 MOTOR-DISCONNECT MEANS

Each motor shall be provided with a disconnecting means when required by NFPA 70 even though not indicated. For single-phase motors, a single or double pole toggle switch, rated only for alternating current, will be acceptable for capacities less than 30 amperes, provided the ampere rating of the switch is at least 125 percent of the motor rating. Switches shall disconnect all ungrounded conductors.

3.13 TRANSFORMER INSTALLATION

Three-phase transformers shall be connected only in a delta-wye or wye-delta configuration as indicated. Transformers to be located within the building may be provided in the manufacturer's standard, ventilated indoor enclosure designed for use in 40 degrees C ambient temperature, unless otherwise indicated.

3.14 LAMPS AND LIGHTING FIXTURES

Ballasted fixtures shall have ballasts which are compatible with the specific type and rating of lamps indicated and shall comply with the applicable provisions of the publications referenced.

3.14.1 Lamps

Lamps of the type, wattage, and voltage rating indicated shall be delivered to the project in the original cartons and installed in the fixtures just prior to the completion of the project.

3.14.1.1 Fluorescent

Fluorescent lamps for magnetic ballasts shall be as indicated and shall be of a type that will not require starter switches. Lamps shall be of the rapid-start type unless otherwise shown or approved. Fluorescent lamps for electronic ballasts shall be as indicated.

3.14.1.2 High-Intensity-Discharge

High-intensity-discharge lamps shall be the high-pressure sodium type unless otherwise indicated, shown, or approved.

3.14.2 Fixtures

Fixtures shall be as shown and shall conform to the following specifications and shall be as detailed on Standard Drawing No. 40-06-04, which accompany

and form a part of this specification for the types indicated. Illustrations shown on these sheets are indicative of the general type desired and are not intended to restrict selection to fixtures of any particular manufacturer. Fixtures of similar designs and equivalent energy efficiency, light distribution and brightness characteristics, and of equal finish and quality will be acceptable if approved. In suspended acoustical ceilings with fluorescent fixtures, the fluorescent emergency light fixtures shall be furnished with self-contained battery packs.

3.14.2.1 Accessories

Accessories such as straps, mounting plates, nipples, or brackets shall be provided for proper installation. Open type fluorescent fixtures with exposed lamps shall have a wire-basket type guard.

3.14.2.2 Suspended Fixtures

Suspended fixtures shall be provided with swivel hangers in order to ensure a plumb installation. Pendants, rods, or chains 1.2 meters or longer excluding fixture, shall be braced to limit swinging. Bracing shall be 3 directional, 120 degrees apart. Single unit suspended fluorescent fixtures shall have twin-stem hangers. Multiple unit or continuous-row fluorescent units shall have a tubing or stem for wiring at one point, and a tubing or rod suspension provided for each length of chassis including one at each end. Maximum distance between adjacent tubing or stems shall be 3.1 meters. Rods shall be of not less than 4.8 mm (3/16 inch) diameter. Flexible raceway shall be installed to each fixture from an overhead junction box. Fixture to fixture wiring installation is allowed only when fixtures are installed end to end in a continuous run.

3.14.2.3 Ceiling Fixtures

Ceiling fixtures shall be coordinated with and suitable for installation in, on, or from the suspended ceiling provided under other sections of these specifications. Installation and support of fixtures shall be in accordance with the NFPA 70 and manufacturer's recommendations. Recessed fixtures shall have adjustable fittings to permit alignment with ceiling panels. Recessed fixtures installed in fire-resistive type of suspended ceiling construction shall have the same fire rating as the ceiling or shall be provided with fireproofing boxes having materials of the same fire rating as the ceiling panels, in conformance with UL-03. Surface-mounted fixtures shall be suitable for fastening to the structural support for ceiling panels.

3.14.2.4 Sockets

Sockets of industrial, strip, and other open type fluorescent fixtures shall be of the type requiring a forced movement along the longitudinal axis of the lamp for insertion and removal of the lamp.

3.15 EQUIPMENT CONNECTIONS

All wiring not furnished and installed under other sections of the specifications for the connection of electrical equipment as indicated on the drawings shall be furnished and installed under this section of the specifications. Connections shall comply with the applicable requirements of paragraph WIRING METHODS. Flexible conduits 2 m or less in length shall

be provided to all electrical equipment subject to periodic removal, vibration, or movement and for all motors. All motors shall be provided with separate grounding conductors. Liquid-tight conduits shall be used in damp or wet locations.

3.15.1 Motors and Motor Control

Motors, motor controls, and motor control centers shall be installed in accordance with NFPA 70, the manufacturer's recommendations, and as indicated. Wiring shall be extended to motors, motor controls, and motor control centers and terminated.

3.15.2 Installation of Government-Furnished Equipment

Wiring shall be extended to the equipment and terminated.

3.16 CIRCUIT PROTECTIVE DEVICES

The Contractor shall calibrate, adjust, set and test each new adjustable circuit protective device to ensure that they will function properly prior to the initial energization of the new power system under actual operating conditions.

3.17 PAINTING AND FINISHING

Field-applied paint on exposed surfaces shall be provided under Section 09900 PAINTING, GENERAL.

3.18 REPAIR OF EXISTING WORK

The work shall be carefully laid out in advance, and where cutting, channeling, chasing, or drilling of floors, walls, partitions, ceiling, or other surfaces is necessary for the proper installation, support, or anchorage of the conduit, raceways, or other electrical work, this work shall be carefully done, and any damage to building, piping, or equipment shall be repaired by skilled mechanics of the trades involved at no additional cost to the Government.

3.19 FIELD TESTING

Field testing shall be performed in the presence of the Contracting Officer. The Contractor shall notify the Contracting Officer 30 days prior to conducting tests. The Contractor shall furnish all materials, labor, and equipment necessary to conduct field tests. The Contractor shall perform all tests and inspection recommended by the manufacturer unless specifically waived by the Contracting Officer. The Contractor shall maintain a written record of all tests which includes date, test performed, personnel involved, devices tested, serial number and name of test equipment, and test results. All field test reports will be signed and dated by the Contractor.

3.19.1 Safety

The Contractor shall provide and use safety devices such as rubber gloves, protective barriers, and danger signs to protect and warn personnel in the test vicinity. The Contractor shall replace any devices or equipment which are damaged due to improper test procedures or handling.

3.19.2 Ground-Resistance Tests

The resistance of each grounding electrode system shall be measured using the fall-of-potential method defined in IEEE Std 81. Soil resistivity in the area of the grid shall be measured concurrently with the grid measurements. Ground resistance measurements shall be made before the electrical distribution system is energized and shall be made in normally dry conditions not less than 48 hours after the last rainfall. Resistance measurements of separate grounding electrode systems shall be made before the systems are bonded together below grade. The combined resistance of separate systems may be used to meet the required resistance, but the specified number of electrodes must still be provided.

a. Single rod electrode - 25 ohms.

b. Grid electrode - 10 ohms.

3.19.3 Ground-Grid Connection Inspection

All below-grade ground-grid connections will be visually inspected by the Contracting Officer before backfilling. The Contractor shall notify the Contracting Officer 24 hours before the site is ready for inspection.

3.19.4 Metal Enclosed Bus Duct Tests

a. Insulation Resistance phase-to-phase, all combinations.

b. Insulation resistance phase-to-ground, each phase.

c. AC or DC high-potential test.

d. Phase rotation test.

3.19.5 Motor Tests

a. Phase rotation test to ensure proper directions.

b. Operation and sequence of reduced voltage starters.

c. High potential test on each winding to ground.

d. Insulation resistance of each winding to ground.

e. Vibration test.

f. Dielectric absorption test on motor and starter.

3.19.6 Dry-Type Transformer Tests

The following field tests shall be performed on all dry-type transformers 30 kVA and above.

a. Insulation resistance test phase-to-ground, each phase.

b. Turns ratio test.

3.19.7 Circuit Breaker Tests

The following field tests shall be performed on circuit breakers.

3.19.7.1 Circuit Breakers, Molded Case

a. Insulation resistance test phase-to-phase, all combinations.

b. Insulation resistance test phase-to-ground, each phase.

c. Closed breaker contact resistance test.

d. Manual operation of the breaker.

3.19.8 Motor Control Centers

a. Insulation resistance test phase-to-phase, all combinations.

b. Insulation resistance test phase-to-ground, each phase.

c. Manual and electrical operational tests.

3.20 OPERATING TESTS

After the installation is completed, and at such time as the Contracting Officer may direct, the Contractor shall conduct operating tests for approval. The equipment shall be demonstrated to operate in accordance with the specified requirements. An operating test report shall be submitted in accordance with paragraph FIELD TEST REPORTS.

3.21 ACCEPTANCE

Final acceptance of the facility will not be given until the Contractor has successfully completed all tests and after all defects in installation, material or operation have been corrected.

End of Section

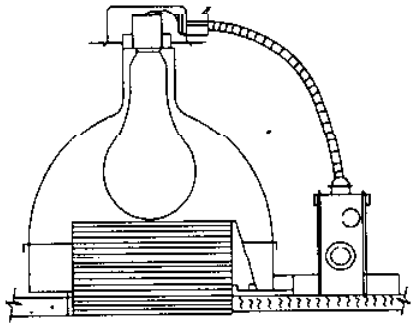

TYPE 116

Recessed Round Incandescent Downlight

Fixture shall conform to UL 1571. Fixture shall have thermal protection or shall be UL listed as suitable for use in direct contact with insulation. Fixture shall be rated for a 200 watt lamp. The mounting plate shall be steel. The reflector shall be highly polished aluminum. The baffle shall be black, constructed of aluminum, and multigrooved for low brightness. The baffle shall be securely attached to the fixture housing and shall be easily removed without the use of tools. Fixture shall be provided with a through wiring junction box and shall be prewired.

Fixture type indicated on this sheet shall also conform to requirements specified and indicated in the contract documents.

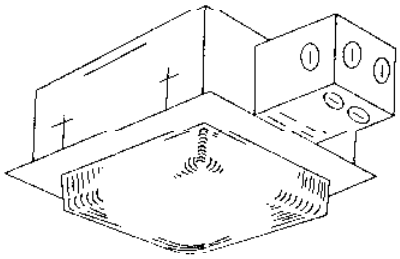

TYPE 126
Square

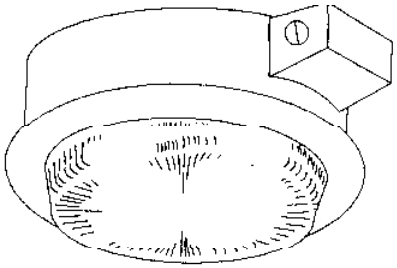

TYPE 127
Round

Weathertight, Insect-proof, Recessed Incandescent Fixture

First Suffix	Second Suffix	Description
A		Drop white opal glass lens
B		Flat prismatic glass lens
	1	Suspended plaster installation
	2	Concrete pour installation

Fixture shall conform to UL 1571 for use in wet locations and shall be enclosed and gasketed. Fixture shall be suitable for installation in outdoor soffitts. The housing shall be 18 gage hot-dipped galvanized steel and shall have sealed seam construction. The housing for suspended plaster installation shall be provided with hot-dipped galvanized steel sheet metal splice compartment and plaster frame. The housing for concrete pour installation shall be provided with a cast aluminum splice compartment. The interior surfaces of the housing shall be finished with baked white enamel. The reflector shall be one piece specular aluminum. The lampholder shall be medium base glazed porcelain. The lens frame shall be one piece cast aluminum with a 1/8-inch minimum wall thickness. The lens frame shall have a brushed satin aluminum finish and be provided with a clear acrylic lacquer protective coating. The lens frame shall be held securely to the fixture housing with a hinge and self-centering captive screws or with a chain-hinge and four self-centering captive screws. A round neoprene factory installed gasket shall be provided between the lens frame and the ceiling. A flat gasket shall be provided between the lens frame and the glass diffuser. The glass lens shall have a minimum thickness of 1/4 inch. The lens shall be held securely to the lens frame and gasket with steel clips and screws. Fixture shall be prewired. Fixture shall be rated for a 150 watt lamp.

Fixture types indicated on this sheet shall also conform to requirements specified and indicated in the contract documents.

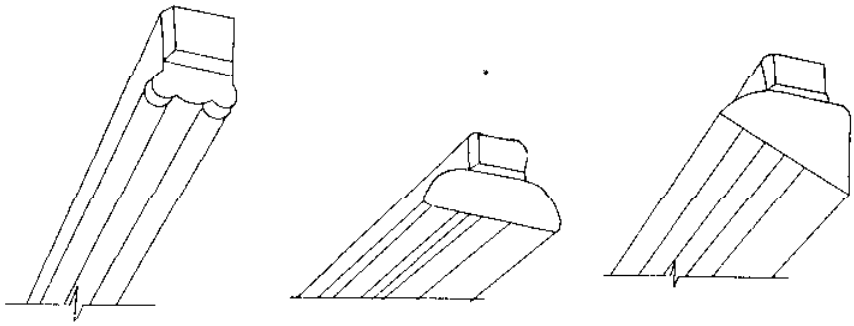

TYPE 220 Without Reflector	TYPE 221 With Symmetric Reflector	TYPE 222 With Asymmetric Reflector

Single- and Two-Lamp Fluorescent Strip Fixture

Suffix	Description
A	One lamp
B	Two lamps

Fixture shall be constructed of cold-rolled steel and shall conform to UL 1570. The fixture shall have a die-formed steel channel, suitable mounting holes, and 1/2-inch knockouts in back. Channel and end fittings shall have a baked white enamel finish. The channel and end fittings shall be removed to permit the installation of a continuous row of fixtures, the closure of fixtures at the ends of continuous rows, and the closure of the ends of individually mounted fixtures with no light leakage. Channel covers shall have threaded fittings for reflector mounting, shall be constructed of die-formed steel, and shall be finished with baked white enamel. All ferrous metal parts shall receive a rust inhibitive coating before application of finish coat. Reflectors shall be designed for direct attachment to the channel cover with suitable threaded fittings. Reflectors shall be manufacturer's standard commercial product and shall be constructed of die-formed aluminum with highly polished finish, or steel with white porcelain enamel finish, or steel with baked white enamel finish. Fixture shall be suitable for pendant and surface mounting. Standard ballast(s) shall be the Class P, high power factor type which has been approved for the application by the Certified Ballast Manufacturers. Fixture shall be prewired. Sockets shall be of the type requiring a forced movement along the longitudinal axis of the lamp for insertion and removal of the lamp. Fluoresent tubes shall be protected by a virgin acrylic protective sleeve and clear plastic vented end caps.

Fixture types indicated on this sheet shall also conform to requirements specified and indicated in the contract documents.

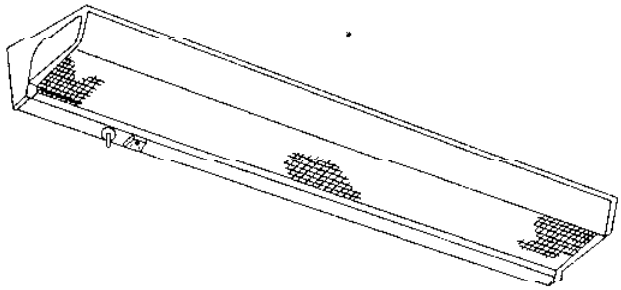

TYPE 223
Two Lamps

Enclosed, Wall Mounted, Direct And/Or Indirect
Fluorescent Fixture

Fixture shall be constructed of cold-rolled steel and shall conform to UL 1570. Ferrous metal surfaces shall be treated with 5-stage coating of zinc phosphate and finished in baked white enamel. Seams shall be sealed or gasketed to prevent light leakage. The lens shall be 0.125 inch nominal thickness (minimum 0.115 inch) of 100 percent virgin clear acrylic plastic, with a regular array of prismatic elements on one surface and smooth on the other. Receptacle shall be 2-pole, 3-wire, rated at 15 amperes and 125 volts, and shall be of the grounding type. On/off pull chain switch shall be provided for downlight. Upward light shall be controlled from a wall switch. Fixture shall have knockouts in the back for wiring through an outlet box and a grounding terminal. Standard ballast shall be the Class P, high power factor type which has been approved for the application by the Certified Ballast Manufacturers. Fixture shall be prewired.

Fixture type indicated on this sheet shall also conform to requirements specified and indicated in the contract documents.

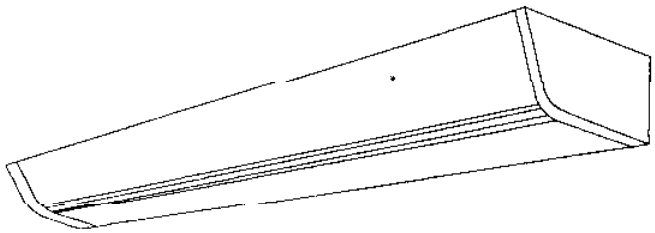

TYPE 224	TYPE 225
One Lamp	Two Lamps
48-inch Length	48-inch Length

Enclosed, Wall Mounted, Direct Fluorescent Fixture

Fixture shall conform to UL 1570. Housing shall be of cold-rolled, die-formed steel. The back housing shall be one piece, solid along its entire length. End plates shall be die-formed and shall be fastened securely to the housing in a manner that permits no light leakage. All metal parts shall receive a rust inhibitive coating and a baked white enamel finish coat. Lens shall be prismatic, one piece, 0.125 inch nominal thickness, and 100 percent virgin acrylic. The lens shall be easily removed without the use of tools and shall be held in place by concealed hinges, by reinforcing ribs along the edges, or by resting on the end plates. The lens shall be attached to the housing so there is no light leakage. Standard ballast(s) shall be the Class P, high power factor type which has been approved for the application by the Certified Ballast Manufacturers. Fixture shall be prewired.

Fixture types indicated on this sheet shall also conform to requirements specified and indicated in the contract documents.

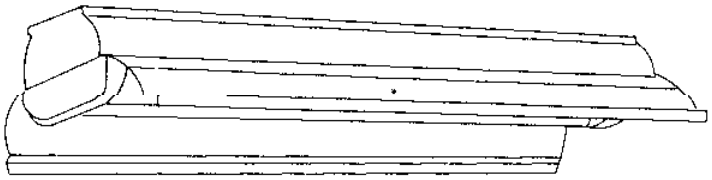

TYPE 230
Suspension Mounted, Industrial,
Open Type Fluorescent Fixture, 4-Foot

First-Suffix	Second-Suffix	Description
A		Two lamps
B		Three lamps
	1	8 to 15 percent uplight
	2	18 to 25 percent uplight

Fixture shall conform to UL 1570. Standard ballast(s) shall be the Class P, high power factor type approved for the application by the Certified Ballast Manufacturers. Channel housing, end fittings, and reflector shall be constructed with die-formed, cold-rolled steel. Reflector finish shall be porcelain enamel, baked white enamel or aluminum oxide. Sockets shall be of the type requiring a forced movement along the longitudinal axis of the lamp for insertion and removal of the lamp. Fixture shall be prewired. Fluoresent tubes shall be protected by a virgin acrylic protective sleeve and clear plastic vented end caps.

Fixture type indicated on this sheet shall also conform to requirements specified and indicated in the contract documents.

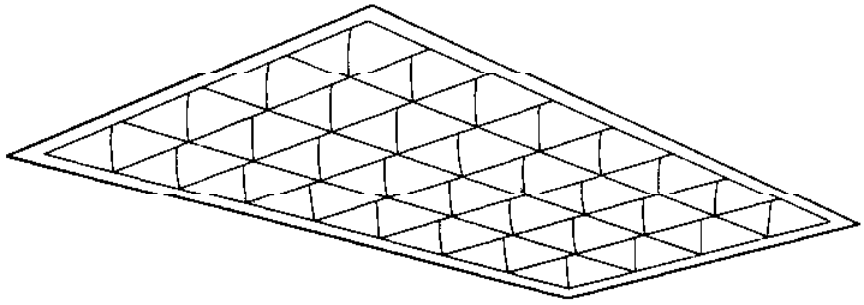

TYPE 234	TYPE 235	TYPE 236
Static Troffer	Air Handling Troffer	Heat Removal/ Transfer Troffer

Recessed Fluorescent Fixture, 2-foot by 4-foot, With Parabolic Louver

First Suffix	Second Suffix	Description
A		Two-lamp, 12-cell louver
B		Three-lamp, 18-cell louver
C		Four-lamp, 32-cell louver
	1	Type 200 emergency unit

Fixture shall conform to UL 1570. Housing, trim flanges if any, shall be die-formed, cold-rolled steel embossed if necessary to ensure structural rigidity. Metal parts to be painted shall receive one or more rust inhibitive coatings before application of the finish coat. Reflective surfaces shall be finished to provide an initial and minimum reflectance of not less than 85 percent. The louver shall be the anodized or semi-specular finished aluminum type consisting of inter- connected cellular baffles not less than three nor more than four inches in depth. The louver shall be hinged on either longitudinal side using die-formed steel hinges, and shall be held securely in place by the hinges and spring-steel latches that are inconspicuous or concealed from view when louver is in place and latches are closed. Securing the louver in place shall prevent light leakage and movement of the louver when subjected to normal vibrations. The ballast(s) and fixture wiring shall be concealed by a snap-in type of metal cover which can be removed and replaced without the use of tools. Standard ballast(s) shall be of the Class P, high power factor type that has been approved by the Certified Ballast Manufacturers for the application. Ballast(s), lampholders, louver and the wireway cover shall be removable and replaceable without removal of the fixture from the ceiling. Fixture shall be prewired.

Fixture type indicated on this sheet shall also conform to requirements specified and indicated in the contract documents.

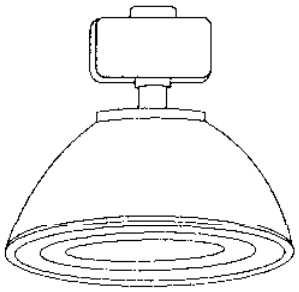

TYPE 301
High Bay

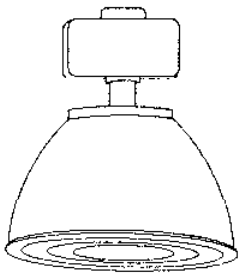

TYPE 302
Low Bay

Enclosed, Pendant, Integrally Ballasted, Industrial,
High Intensity Discharge Fixture

First Suffix	Second Suffix	Description
A		Rated for metal halide lamp
B		Rated for high pressure sodium lamp
	1	Type 300 emergency quartz standby

Fixture shall conform to UL 1572. The ballast housing and structural parts, including the mounting devices, shall be of cast aluminum. The optical assembly shall be enclosed, gasketed, and locked to the ballast housing by a positive vibration-proof means. An optical assembly filter to permit the passage of air during heating and cooling cycles shall be provided. All exposed cast aluminum parts shall have a baked enamel paint finish. The lens shall be heat and impact resistant glass mounted in a gasketed, hinged aluminum door frame. Ballast shall be of the high power factor type. Fixture shall be prewired. Ballast shall start and operate the lamp in an ambient temperature range of minus 20 degrees F to 105 degrees F. Metal halide fixture shall use a lead-peaked autotransformer ballast. High pressure sodium fixture shall use a regulated type ballast. Reflector shall be constructed of aluminum and contoured or formed to provide high lighting efficiency. The exterior of the reflector shall have a clear acrylic lacquer protective coating. The interior of the reflector shall be the manufacturer's standard commercial product finish suitable for light source provided. The fixture shall have a mogul base glazed porcelain lampholder, adjustable for varying the spacing-to-mounting-height ratio in the field. The fixture shall have separate, removable mounting components that can be easily removed and assembled to the structural or mounting hardware before mounting the remainder of the fixture.

Fixture types indicated on this sheet shall also conform to requirements specified and indicated in the contract documents.

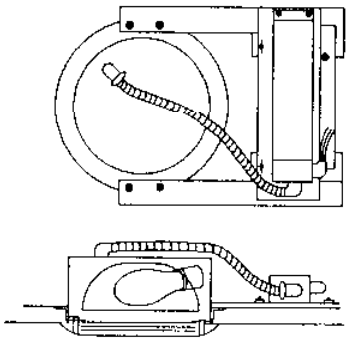

TYPE 308
Plaster Ceiling Installation

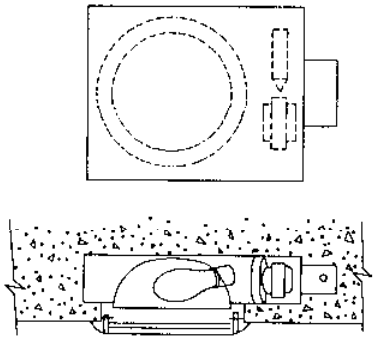

TYPE 309
Poured Concrete Installation

Enclosed and Gasketed, Recessed, Round,
Integrally Ballasted, Mercury Vapor Fixture

First Suffix	Second Suffix	Description
A		Flat prismatic glass diffuser
B		Flat white glass diffuser
C		Drop homogeneous glass diffuser
D		Drop prismatic glass diffuser
	1	Baked white enamel exterior trim
	2	Brushed aluminum exterior trim

Fixture shall conform to UL 1572 and shall be rated for use in damp locations. Fixture housing shall be galvanized steel. The interior shall be finished with baked white enamel. The reflector shall be aluminum with the manufacturer's standard commercial product finish suitable for the lamp type and rating. The fixture shall be gasketed to prevent the entry of insects and light leakage. The lens framing shall be one-piece cast aluminum, 10-inch nominal diameter, finished as specified or indicated, and shall be held to the fixture housing with captive screws of same finish as lens trim. Ballast shall be of the high power factor type. The fixture ballast shall be of the constant wattage autotransformer type rated to operate one 100 watt mercury vapor lamp. The ballast shall be capable of starting and operating the lamp at ambient temperatures from minus 20 degrees F to 105 degrees F. Fixture depth for type 309 shall not exceed 7 inches. The fixture shall be prewired and shall have a glazed porcelain lampholder.

Fixture types indicated on this sheet shall also conform to requirements specified and indicated in the contract documents.

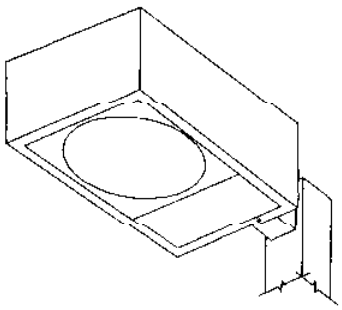

TYPE 401

Enclosed, Integrally Ballasted, Rectangular Shaped,
Side Mounted, High Intensity Discharge Lighting Fixture

First Suffix	Second Suffix	Description
A		Rated for mercury vapor lamp
B		Rated for metal halide lamp
C		Rated for high pressure sodium lamp
	1	IES type II medium light distribution
	2	IES type III medium light distribution
	3	IES type V medium light distribution.

Fixture shall conform to UL 1572. Fixture housing shall have sides and doorframe of one-piece extruded aluminum with welded joints and top of crowned sheet aluminum. The top shall be spot welded and sealed watertight. The housing shall be rigidly attached to a square shaped mounting arm of extruded aluminum. The fixture door shall have a flat heat and impact resistant lens of 3/16-inch nominal, tempered glass, and shall be hinged and held in place with captive screws of the same finish as the door. The lens and door shall enclose the lamp compartment. The reflector shall be aluminum of the manufacturer's standard commercial product finish suitable for the lamp type and rating. The ballast shall be of the high power factor type. The ballast and power components shall be mounted on a single bracket and shall be removable. The fixture, including the mounting arm, shall be gasketed to allow air movement but prevent the entry of dust and insects. Ballast shall be of the constant wattage autotransformer type for mercury vapor lamps, lead-peak autotransformer type for metal halide lamps, and regulating type for high pressure sodium lamps. Ballast shall be capable of starting and operating the lamp at ambient temperatures ranging from minus 20 degrees F to 105 degrees F. A square extruded aluminum pole including anchor type base, anchor bolts and mounting hardware shall be provided by the fixture manufacturer and shall be the manufacturer's standard commercial product for the number of fixtures and wind load indicated or specified. The fixture housing mounting arm shall have a dark duranodic bronze finish. The fixture shall be prewired and shall have a mogul base glazed porcelain lampholder.

Fixture type indicated on this sheet shall also conform to requirements specified and indicated in the contract documents.

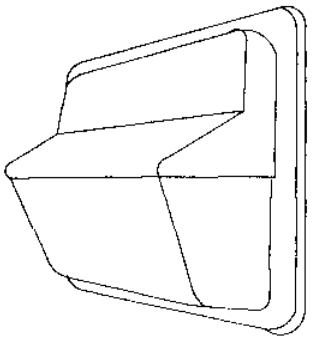

TYPE 501

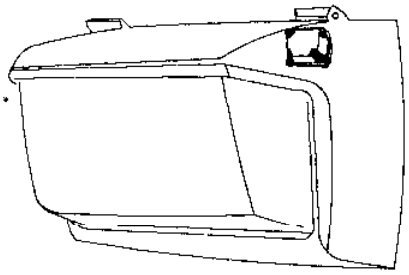

TYPE 502

High Intensity Discharge Fixture for Exterior Wall Mounting, Medium Output

Suffix	Description
	Rated for:
A	50 watt high pressure sodium lamp
B	70 watt high pressure sodium lamp
C	100 watt high pressure sodium lamp
D	150 watt high pressure sodium lamp
E	175 watt metal halide lamp

Fixture shall conform to UL 1572 and shall be rated for use in wet locations. The fixture housing, door assembly, and backplate shall be die-cast aluminum. The door assembly shall have integral cast aluminum hinges. The door assembly shall be held securely to the fixture housing with a stainless steel safety strap when the door is in the open position. The door assembly shall be held firmly against a sealing gasket between the fixture door and housing by stainless steel latches or with stainless steel or brass captive screws when the fixture door is closed. The refractor shall be prismatic borosilicate glass or polycarbonate resin. The refractor shall be gasketed and securely held in the door frame, but shall be easily removed for replacement with a common tool. The reflector shall be aluminum with the manufacturer's standard commercial product finish suitable for the type and rating of the lamp. The fixture shall have manufacturers standard protective coating. Cast knockouts shall be provided in the backplate for recessed outlet box mounting. Ballast shall be of the high power factor type. Ballast shall be of the lead-peak autotransformer type metal halide for lamps and the regulating type for high pressure sodium lamps. Ballast shall be capable of starting and operating the lamp at ambient temperatures from minus 20 degrees F to 105 degrees F. The fixture shall be prewired, and shall have a field adjustable, mogul base glazed porcelain lampholder.

Fixture types indicated on this sheet shall also conform to requirements specified and indicated in the contract documents.

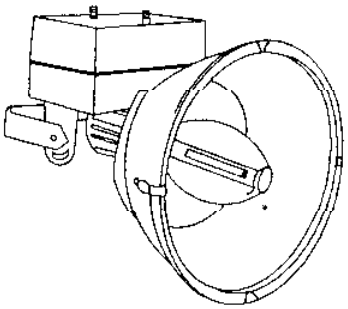

TYPE 505

General Purpose Enclosed, High Intensity Discharge Floodlight
With Symmetrical Light Distribution

First Suffix	Second Suffix	Description
		Rated for:
A		400 watt metal halide lamp
B		1000 watt metal halide lamp
C		400 watt high pressure sodium lamp
D		1000 watt high pressure sodium lamp
	1	NEMA Type 2 light distribution
	2	NEMA type 3 light distribution
	3	NEMA type 4 light distribution
	4	NEMA type 5 light distribution
	5	NEMA type 6 light distribution

Fixture shall conform to UL 1572 and NEMA FA 1. Fixture mounting shall be adjustable. The fixture shall consist of a die-cast aluminum yoke and integral ballast housing, a galvanized steel trunnion mounting arm, and a spun aluminum housing enclosed with a thermal shock and impact resistant tempered glass lens which is held securely to the housing with a hinged cover ring and stainless steel latches. The spun aluminum housing shall, if specified, be provided with an outer protective housing to protect the inner housing against damage of vandals and hail. The enclosure cover shall be provided with a gasket. All exposed metallic parts shall receive the manufacturer's standard commercial product finish. Interior of spun aluminum housing shall receive the manufacturer's standard commercial product finish suitable for the lamp tree and rating. The fixture shall be prewired, shall have a mogul base glazed porcelain lampholder, and shall be provided with three feet of flexible NEC type SO 14-3 cable. Ballast shall be capable of starting and operating the lamp in an ambient temperature range of minus 20 degrees F to 105 degrees F. Ballast shall be of the high power factor type. Metal halide fixtures shall have a lead-peak autotransformer ballast, and high pressure sodium fixtures shall have a regulated ballast.

Fixture type indicated on this sheet shall also conform to requirements specified and indicated in the contract documents.

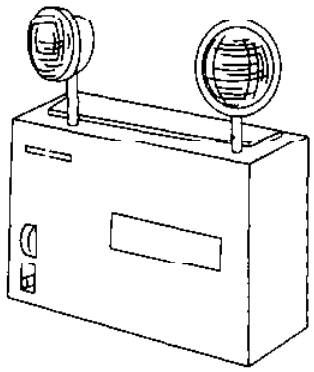

TYPE 603

6-Volt Emergency Battery Pack Unit with Two Floodlights

Unit shall conform to UL 924, NFPA 101, and shall meet or exceed the NFPA 70 time and voltage requirements. The unit shall be dual-rated for use on either 120-Volt or 277-Volt alternating current power supplies. Following sustained loss of the normal power supply, the unit shall be capable of automatically and instantaneously illuminating the two 6-Volt lighting fixtures for a period of not less than 90 minutes at a battery voltage in excess of 87.5 percent of the nominal voltage rating. The battery shall be the nickel-cadmium, pocket plate type designed to be maintenance free during the expected battery life, and shall be warranted for not less than 3 years from the date of the purchase of the unit, and shall be field replaceable without requiring removal of other components. The battery charger shall be the solid-state type and shall provide a continuous, variable, current limited, filtered and regulated charge rate. The battery and charger shall be contained in a steel cabinet not less than 18 gauge thickness with an enamel finish, unless otherwise approved, which shall be equipped with a push-to-test switch and a meter to indicate battery voltage when the switch is closed. Mounting brackets or shelf shall be provided, complete with all mounting hardware, all with a finish to match the finish or color of the cabinet. The unit shall be prewired and equipped with two 6-volt, 5-8 watt floodlights as indicated.

Fixture type indicated on this sheet shall also conform to requirements specified and indicated in the contract documents.

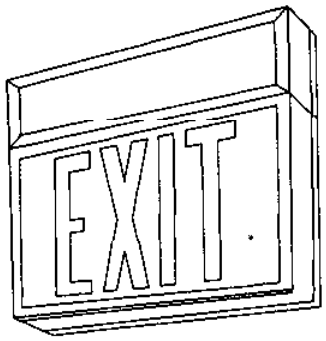

TYPE 604

Exit Sign With Self-Contained Emergency Battery

First Suffix	Second Suffix	Description
A		Single face
B		Double face
	1	End mounted
	2	Top mounted
	3	Back mounted
	4	Stem mounted

Unit shall conform to UL 924, NFPA 101, and shall meet or exceed the NFPA 70 time and voltage requirements. The unit shall be dual-rated for use on either 120-Volt or 277-Volt alternating current power supplies. Following sustained loss of the normal power supply, the unit shall be capable of automatically and instantaneously illuminating the two 6-Volt lighting fixtures for a period of not less than 90 minutes at a battery voltage in excess of 87.5 percent of the nominal voltage rating. The battery shall be the nickel-cadmium, pocket plate type designed to be maintenance free during the expected battery life, and shall be warranted for not less than 3 years from the date of the purchase of the unit, and shall be field replaceable without requiring removal of other components. The battery charger shall be the solid-state type and shall provide a continuous, variable, current limited, filtered and regulated charge rate. The battery and charger shall be contained in a steel cabinet not less than 18 gauge thickness with an enamel finish, unless otherwise approved, which shall be equipped with a push-to-test switch and a meter to indicate battery voltage when the switch is closed. Mounting brackets or shelf shall be provided, complete with all mounting hardware, all with a finish to match the finish or color of the cabinet. All ferrous metal parts shall receive a rust inhibitive coating before application of the finish coat. The fixture shall have a light-emitting diode pilot light to show that the battery charger is functioning. Fixture shall be prewired, with wiring concealed in the illuminated portion of the fixture housing.

Fixture type indicated on this sheet shall also conform to requirements specified and indicated in the contract documents.

SECTION 16462

POWER CONDITIONING TRANSFORMERS
3/98

PART 1 GENERAL

The requirements of the Contract, Division 1, and Division 16 apply to work in this Section.

1.1 SECTION INCLUDES

Power conditioning transformers.

1.2 SYSTEM DESCRIPTION

a. Dual-shielded, dry-type transformer power conditioner, isolation transformers shall be designed for low voltage power distribution and shall be of rugged construction suitable for commercial and industrial power applications where voltage stabilization and electrical noise attenuation are required.

b. Portable power conditioners shall provide stabilization and electrical noise attenuation for any location.

c. The power conditioner shall be provided with an internal microprocessor to monitor the output voltage and switch taps on the transformer through the action of SCR's to ensure that the output voltage is within proper regulation.

The microprocessor shall continuously monitor each phase of the output and if any output voltage exceeds +12% for 2 cycles, or if reduced by -15% for 1 cycle, the microprocessor shall turn off all taps removing all voltage to the load.

d. The power conditioner shall have over-voltage protection circuits for each phase monitored by the microcomputer for over-voltage protection. These circuits shall trip the input circuit breaker if the output voltage exceeds the allowable limit due to a fault condition. A circuit breaker, equipped with a shunt-trip, at the input of the power conditioner shall provide over current protection to the power conditioner and the load. A 225 ampere, 3-pole-250V circuit breaker shall be provided at the secondary of the power conditioner to provide over-current protection for the bus duct.

1.3 SUBMITTALS

Manufacturer shall provide copies of the following documents to Owner for review and evaluation in accordance with general requirements of Division 1 and Division 16:

a. Product Data on specified products;

b. Shop Drawings on specified products;

c. Certified copies of all Type (Design) and Verification Test Reports.

1.4 PROJECT RECORD DOCUMENTS

Maintain an up-to-date set of Contract documents. Note any and all revisions and deviations that are made during the course of the project.

1.5 OPERATION AND MAINTENANCE DATA

a. Manufacturer shall provide copies of installation/schematic diagrams for installation, operation and maintenance procedures to Owner in accordance with general requirements of Division 1 and Division 16.

b. Submit operation and maintenance data based on factory and field testing, operation and maintenance of specified product.

c. The mean time between failures (MTBF), shall exceed 100,000 hours.

1.6 QUALITY ASSURANCE (QUALIFICATIONS)

a. Manufacturer shall have specified in the manufacture and assembly of power conditioning transformers for 50 years.

b. Power conditioning transformers shall be listed and/or classified by Underwriters Laboratories in accordance with standards listed in Article 1.03 of this specification.

c. Manufacturer's Certificate of ISO 9000 Compliance.

d. Installer's Certificate of ISO 9000 Compliance.

e. Installer has specialized in installing power conditioning transformers with minimum of 3 years documented experience.

1.7 DELIVERY, STORAGE, AND HANDLING

a. Delivery, store, protect, and handle products in accordance with recommended practices listed in manufacturer's Installation and Maintenance Manuals.

b. Deliver each power conditioning transformer in individual shipping cases for ease of handling. Each transformer shall be wrapped for protection.

c. Inspect and report concealed damage to carrier within specified time.

d. Store in a clean, dry space. Maintain factory protection or cover with heavy canvas or plastic to keep out dirt, water, construction debris, and traffic. (Heat enclosures to prevent condensation).

e. Handle in accordance with NEMA 1 and manufacturer's written instructions to avoid damaging equipment, installed devices, and finish. (Lift only by installed lifting eyes).

1.8 PROJECT CONDITIONS (SITE ENVIRONMENTAL CONDITIONS)

a. Follow (standards) service conditions before, during and after power conditioning transformers installation.

b. Power conditioning transformers shall be located in well-ventilated areas, free from excess humidity, dust and dirt and away from hazardous materials. Ambient temperature of area will be between minus 30 and plus 40 degrees C. Indoor locations shall be protected to prevent moisture from entering enclosure.

1.9 WARRANTY

Manufacturer warrants equipment to be free from defects in materials and workmanship for 1 year from date of installation or 18 months from date of purchase, whichever occurs first.

1.10 MAINTENANCE SERVICE

Furnish complete service and maintenance of power conditioning transformers for 1 year from date of substantial completion.

1.11 EXTRA MATERIALS

Provide spares as indicated on drawings.

1.12 FIELD MEASUREMENTS

Make all necessary field measurements to verify that equipment shall fit it allocated space in full compliance with minimum required clearances specified in National Electrical Code.

PART 2 PRODUCTS

2.1 MANUFACTURER

General Electric Company products have been used as the basis for design. Other manufacturers' products of equivalent quality, dimensions, and operating features may be acceptable, at the Engineer's discretion, if they comply with all requirements specified or indicted in these Contract documents.

2.2 MANUFACTURED ASSEMBLIES

Furnish power conditioning transformers, GE Type line conditioners 3-phase hard-wire (or equal), as indicated in drawings.

2.3 EQUIPMENT

Refer to drawings for actual layout and location of equipment and components; current ratings of devices, bus bars, and components; voltage ratings of devices, components and assemblies; and other required details.

a. 3-Phase Hard-Wired Line Conditioners

1. 3-phase hard-wired conditioners shall be rated 10 to 150 KVA. all units are floor mounted.

2. Construction

a) Ferromagnetic core shall be constructed of high grade grain oriented silicon steel.

b) Coil shall use high grade magnet wire with vacuum impregnated non-hydroscopic thermosetting varnish for superior strength and heat transfer.

c) UL recognized 220 degree C insulation system shall be capable of continuous operation at 40 degree C ambient without exceeding a 150 degree C winding temperature rise.

d) Enclosure shall be NEMA I heavy gauge steel for indoor use. The cabinet design shall be such that no twisting or distortion shall occur during shipping.

e) The front panel shall include three LED indicators monitoring the operation of each phase and a fourth LED indicator monitoring over temperature status.

f) Knockout holes shall be placed in the cabinet to provide access for connection of power wiring and removable panels shall be provided for access to the input and output terminal blocks.

3. Shielding and Filtering

a) A full width copper sheet premium electrostatic shield shall be placed between primary and secondary windings. Effective coupling capacitance shall be thirty picofarads.

b) A filter shall provide exceptional normal mode noise attenuation.

c) Surge suppression components shall eliminate low voltage spikes and surges.

4. Performance

a) Nominal input voltage: 480 VAC, 3-phase Delta.

b) Input voltage range: Plus 10 to Minus 20 percent.

c) Nominal output voltage: 208Y VAC.

d) Output voltage regulation: Plus or minus 3 percent of nominal with input variations of +/- 15 percent of nominal under any load conditions.

e) Response time: 0.5 cycles.

f) Common mode noise attenuation: 120 db.

g) Normal mode noise attenuation: 40 db.

h) Added harmonic distortion: Less than 1 percent (at switching).

i) Efficiency: Typically 95 percent or better.

j) Operating frequency: 57 to 63 Hz.

k) Output impedance shall be less than 3 percent.

l) Output cress factor shall be rated at 3:1 with a power factor of 0.7 leading to 0.7 lagging.

m) Overload rating shall be 200 percent of rated load for ten seconds, and 1000 percent for one cycle.

n) Neutral to ground potential shall not exceed 0.5 Volts.

o) A temperature sensor shall be provided for each phase, and each phase shall have two sensors. One sensor will notify the User by illuminating an indicator on the front panel when any phase reaches 180 degree c. The second sensor shall shunt trip the input circuit breaker, if any phase exceeds 193 degree C.

p) The power conditioner shall be convection cooled.

2.4 FINISH

Finish shall consist of degreasing, phosphate cleaning, and an electrodeposit ANSI 61 gray enamel rust inhibiting paint.

PART 3 EXECUTION

3.1 EXAMINATION

a. Verify that power conditioning transformers are ready to install.

b. Verify field measurements are as instructed by manufacturer.

c. Verify that required utilities are available, in proper location and ready for use.

d. Beginning of installation means installer accepts conditions.

3.2 INSTALLATION

Additional provisions and editing may be required for this part.

a. Install per manufacturer's instructions.

b. Install required safety labels.

3.3 FIELD QUALITY CONTROL

a. Inspect installed power conditioning transformers for anchoring, alignment, grounding and physical damage.

b. Check tightness of all accessible mechanical and electrical connections with calibrated torque wrench. Minimum acceptable values are specified in manufacturer's instructions.

3.4 CLEANING

Repaint scratched or marred exterior surfaces to match original finish.

End of Section

SECTION 16610

UNINTERRUPTIBLE POWER SUPPLY (UPS) SYSTEM ABOVE 15 KVA CAPACITY
02/95

PART 1 GENERAL

1.1 REFERENCES

The publications listed below form a part of this specification to the extent referenced. The publications are referred to in the text by basic designation only.

INSTITUTE OF ELECTRICAL AND ELECTRONICS ENGINEERS (IEEE)

IEEE C57.110	(1986; R 1993) Establishing Transformer Capability When Supplying Nonsinusoidal Load Currents
IEEE C62.41	(1991) Surge Voltages in Low-Voltage AC Power Circuits
IEEE Std 450	(1995) Maintenance, Testing, and Replacement of Large Lead Storage Batteries for Generating Stations and Substations
IEEE Std 485	(1983) Recommended Practice for Sizing Large Lead Storage Batteries for Generating Stations and Substations

INTERNATIONAL CONFERENCE OF BUILDING OFFICIALS (ICBO)

ICBO-099S94	(1994) Uniform Building Code

NATIONAL FIRE PROTECTION ASSOCIATION (NFPA)

NFPA 70	(1996) National Electrical Code

1.2 SYSTEM DESCRIPTION

The UPS system shall consist of UPS module, battery system, battery protective device, static bypass transfer switch, controls and monitoring. Input ac power shall be connected to the normal source ac input of the UPS module. The battery shall be connected to the dc input of the UPS module through the battery protective device. The ac output of the UPS system shall be connected to the critical loads.

1.2.1 UPS Module and Battery System

UPS module shall contain required input isolation transformer, rectifier/charger unit, inverter unit and controls, battery protective device, and any other specified equipment/devices. Battery system shall contain the battery cells, racks, battery disconnect, battery monitor and cabinet, if required.

1.2.2 Cabinet, Static Bypass Transfer Switch, Control and Monitoring

The UPS system shall include the system cabinet, static bypass transfer switch, system protective devices, monitoring and controls, means of isolating the system from the critical load, and remote monitoring interfaces.

1.2.3 Design Requirements

1.2.3.1 Parts and Materials

Parts and materials comprising the UPS system shall be new, of current manufacture, of a high grade and free of defects and imperfections, and shall not have been in prior service except as required during aging and factory testing.

1.2.3.2 Components

Active electronic devices shall be solid state. Semiconductor devices shall be sealed. Relays shall be dust-tight.

1.2.3.3 Semiconductor Fusing

Power semiconductors shall be fused to prevent cascaded or sequential semiconductor failures. Indicator lamp denoting blown fuse conditions shall be readily observable by the operator without removing panels or opening cabinet doors.

1.2.3.4 Interchangeability

The subassemblies in one UPS module shall be interchangeable with the corresponding modules within the same UPS, and from one UPS system to another of identical systems.

1.2.3.5 Control Power

Control power shall be derived from two sources, input and output, with automatic selective control. The control power circuit shall have suitable protection, appropriately marked and located in the immediate vicinity of the input protective device.

1.2.3.6 EMI/RFI Protection

The components and the system shall be designed to minimize the emission of electromagnetic waves that may cause interference with other equipment.

1.2.3.7 Wiring

Wiring practices, materials, and coding shall be in accordance with the requirements of NFPA 70 and other applicable standards. Wire runs shall be protected in a manner which separates power and control wiring. Control wiring shall be minimum No. 16 AWG extra-flexible stranded copper. Logic-circuit wiring may be smaller. Ribbon cables shall be minimum No. 22 AWG. Control wiring shall have permanently attached wire numbers.

1.2.3.8 Terminations

Terminals shall be supplied for making power and control connections. Terminal blocks shall be provided for field wiring terminals. Terminal blocks shall be heavy-duty, strap-screw type. Terminal blocks for field wiring shall be located in one place in each module and in the system cabinet. Control wiring shall be extended to the terminal block location. No more than two wires shall land on any terminal point. Where control wiring is attached to the same point as power wiring, a separate terminal shall be provided. If bus duct is used, bus stubs shall be provided where bus duct enters cabinets.

1.2.3.9 Internal Assembly

The subassemblies shall be mounted in pull-out and/or swing-out trays where feasible. Cable connections to the trays shall be sufficiently long to allow easy access to all components. Where not feasible to mount subassemblies in pull-out or swing-out trays, they shall be firmly mounted inside the enclosure. Test points or logic indicators shall be labeled and located on the front edge of the control logic cards, if used.

1.2.3.10 Cabinet Finish

Equipment cabinet shall be cleaned, primed and painted in the manufacturer's standard colors, in accordance with accepted industry standards.

1.2.3.11 Live Parts (300 Volts and Above)

Live parts (300 volts and above) that are exposed when front access doors are open shall be adequately protected or covered to minimize the chance of accidental contact.

1.2.3.12 Safety

UPS shall be equipped with instruction plates including warnings and cautions, suitably located, describing any special or important procedures to be followed in operating and servicing the equipment.

1.2.4 Performance Requirements

1.2.4.1 Normal Operation

The UPS module rectifier/charger shall convert the incoming ac input power to dc power for the inverter and for float charging the battery. The inverter shall supply ac power continuously. Inverter output shall be synchronized with the bypass ac power source, provided that the bypass ac power source is within the specified frequency range. The UPS system shall supply ac power to the critical loads.

1.2.4.2 Loss of ac Input Power

The battery shall supply dc power to the inverter so that there is no interruption of ac power to the critical load whenever the ac input power source deviates from the specified tolerances or fails completely. The battery shall continue to supply power to the inverter for the specified protection time. At the same time, an alarm shall sound to alert operating

personnel, allowing startup of a secondary power source or orderly shutdown of the critical load.

1.2.4.3 Return of ac Input Power Source

The rectifier/charger shall start and assume the dc load from the battery when the ac input power source returns. The rectifier/charger shall then simultaneously supply the inverter with dc power and recharge the battery. This shall be an automatic function and shall cause no disturbance to the critical load.

1.2.4.4 Failure of ac Input Power to Return

Should the ac input power fail to return before the battery voltage reaches the discharge limit, the UPS system shall disconnect from the critical load to safeguard the battery.

1.2.4.5 Transfer to Bypass ac Power Source

When the static bypass switch senses an overload, two or more inverter shutdown signals, or degradation of the inverter output, the bypass switch shall automatically transfer the critical load from the inverter output to the bypass ac power source without an interruption of power only if the connected load exceeds the capacity of the remaining on-line modules. If the bypass ac power source is out of normal tolerance limits, the UPS and the critical load shall shut down.

1.2.4.6 Retransfer to Inverter

The static bypass switch shall be capable of automatically retransferring the load back to the inverter output after the inverter output has returned to normal conditions. Retransfer shall not occur if the two sources are not synchronized.

1.2.4.7 Battery Maintenance

The battery protective device shall provide the means of disconnecting the battery from the rectifier/charger and inverter for maintenance. The UPS module shall continue to function and meet the performance criteria specified except for the battery function.

1.3 SUBMITTALS

Government approval is required for submittals with a "GA" designation; submittals having an "FIO" designation are for information only. The following shall be submitted in accordance with Section 01300 SUBMITTAL PROCEDURES:

SD-01 Data

UPS System Performance Data Sheets; GA.

Pertinent performance data for the UPS system, using a copy of the data sheets supplied with this specification. Data sheets shall be certified by a responsible officer of the UPS manufacturer.

Spare Parts; FIO.

Spare parts data for each different item of material and equipment specified, not later than the date of beneficial occupancy. The data shall include a complete list of parts and supplies with current unit prices and source of supply and an itemized price breakdown of spare parts recommended for stocking. The recommended spare parts selected shall be those which, in the manufacturer's judgment, will be involved in the majority of maintenance difficulties encountered.

Lesson Plans and Training Manuals; GA.

Lesson plans and training manuals for the training phases, including type of training to be provided and proposed dates, with a list of reference materials.

SD-04 Drawings

UPS System; FIO.

Detail drawings consisting of a complete list of equipment and materials, manufacturer's descriptive and technical literature, battery sizing calculations per IEEE Std 485, installation instructions, single-line diagrams, ladder-type schematic diagrams, elevations, layout drawings, and details required to demonstrate that the system has been coordinated and will function properly as a unit.

SD-09 Reports

Factory and Field Tests; GA.

A detailed description of proposed factory test and field test procedures, including proposed dates and steps outlining each test, how it is to be performed, what it accomplishes, and its duration, not later than twomonths prior to the date of each test.

Factory and field test reports in booklet form tabulating factory and field tests and measurements performed, upon completion and testing of the installed system. Factory and field test reports shall be signed by an official authorized to certify on behalf of the manufacturer of the UPS system that the system meets specified requirements. The reports shall be dated after the award of this contract, shall state the Contractor's name and address, shall name the project and location, and shall list the specific requirements which are being certified.

1.4 QUALITY ASSURANCE

1.4.1 Reliability

UPS shall have a minimum acceptable system Mean Time Between Failures (MTBF) of 40,000 hours. A failure is defined as any interruption to or degradation of the UPS output. Automatic switching to bypass due to a problem with the UPS system does not constitute a failure, provided that the critical load is not disturbed.

1.4.2 Maintainability

UPS shall have a maximum acceptable system Mean Time To Repair (MTTR) of 15 minutes. Repair time is defined as the clock time from the arrival of the service technician to the time when the UPS is restored to service either by repair or substitution of the failed component.

1.5 DELIVERY AND STORAGE

Equipment placed in storage shall be protected from humidity and temperature variations, dirt, dust, or other contaminants.

1.6 PROJECT/SITE CONDITIONS

1.6.1 Environmental Conditions

The UPS and battery system shall be capable of withstanding any combination of the following external environmental conditions without mechanical or electrical damage or degradation of operating characteristics.

a. Operating altitude: Sea level to 1,200 meters (4,000 ft.) (Systems applied at higher altitudes shall be derated in accordance with the manufacturer's instructions).

b. Non-operating altitude: Sea level to 12,000 meters (40,000 ft.)

c. Operating ambient temperature range: 0 to 40 degrees C.

d. Non-operating and storage ambient temperature range: Minus 20 to plus 60 degrees C.

e. Operating relative humidity: 0 to 95 percent, without condensation.

1.6.2 Sound Pressure Levels

Sound pressure levels produced by the UPS, when operating under full rated load, at a distance of 1.5 meters in any direction from the perimeter of the unit, shall not exceed 75 dB as measured on the A scale of a standard sound level meter at slow response.

1.6.3 Verification of Dimensions

The Contractor shall become familiar with details of the work, verify dimensions in the field, and shall advise the Contracting Officer of any discrepancy before performing the work.

1.7 NAME PLATES

Each major item of equipment shall have the manufacturer's name, address, type or style, model or serial number, and catalog number on a plate secured to the item of equipment.

1.8 SPECIAL TOOLS

One set of special tools, calibration devices, and instruments required for operation, calibration, and maintenance of the equipment shall be provided.

1.9 OPERATION AND MAINTENANCE MANUALS

Six complete copies of operation manuals for the UPS System outlining the step-by-step procedures required for system startup, operation and shutdown shall be provided. The instructions shall include the manufacturer's name, equipment model number, service manual, parts list, and brief description of equipment and its basic operational features. Six complete copies of maintenance manuals listing routine maintenance procedures, possible breakdowns and repairs, and troubleshooting guides shall be provided. Corrective maintenance procedures shall identify the most probable failures and the appropriate repairs. Test measurement levels shall be referenced to specific test points on the installed equipment. Operation and maintenance manuals may be either combined or separate.

PART 2 PRODUCTS

2.1 STANDARD PRODUCTS

Materials and equipment shall be the standard products of a manufacturer regularly engaged in the manufacture of such products and shall essentially duplicate items that have been in satisfactory use for at least 2 years prior to bid opening. Equipment shall be supported by a service organization that is, in the opinion of the Contracting Officer, reasonably convenient to the site.

2.2 LOAD PROFILE

The UPS system shall be compatible with the load characteristics defined in the LOAD PROFILE TABLE below and load configuration shown. Compensation for UPS/load interaction problems resulting from nonlinear loads or transformer and motor inrush shall be provided.

LOAD PROFILE TABLE

Type of load: Simulator.

Size of load: 75 kVA.

Switching pattern: Unswitched.

Transient characteristics: UNK.

Steady-state characteristics: .80 pf to .90 pf.

Special factors: 80% load factor.

2.3 UPS SYSTEM RATINGS

Unless stated otherwise, the parameters listed are under full output load at 0.8 power factor, with batteries fully charged and floating on the dc bus and with nominal input voltage.

2.3.1 System Capacity

Overall 75 kVA, non redundant, at 40 degrees C.

2.3.2 Module Capacity

75 kVA.

2.3.3 Battery Capacity

Discharge time to end voltage: 15 minutes, at 25 degrees C. Battery shall be capable of delivering 125 percent of full rated UPS load at initial start-up.

2.3.4 System Bus Bracing

Braced for 40,000 amperes symmetrical interrupting capacity.

2.3.5 ac Input

a. Voltage 480 volts line-to-line.

b. Number of phases: 3-phase, 3-wire, plus ground.

c. Voltage Range: Plus 10 percent, minus 15 percent, without affecting battery float voltage or output voltage.

d. Frequency: 60 Hz, plus or minus 5 percent.

e. Power walk-in: 20 percent to 100 percent over 15 to 24 seconds.

f. Total harmonic current distortion (THD) reflected into the primary line: 10 percent maximum.

g. Transformer sub-cycle inrush: 4 to 8 times full load rating.

2.3.6 ac Output

a. Voltage 208 volts line-to-line, 120 volts line-to-neutral.

b. Number of phases: 3-phase, 4-wire, plus ground.

c. Voltage regulation:

(1) Balanced load: Plus or minus 1.0 percent.

(2) 50 percent load imbalance, phase-to-phase: Plus or minus 2 percent.

(3) No-load voltage modulation: Plus or minus 1 percent.

(4) Voltage drift: Plus or minus 1 percent over any 30 day interval (or length of test) at stated ambient conditions.

d. Voltage adjustment: Plus or minus 5 percent manually.

e. Frequency: 60 Hz.

f. Frequency regulation: Plus or minus 0.1 percent.

g. Frequency drift: Plus or minus 0.1 percent over any 24 hour interval (or length of test) at stated ambient conditions when on internal oscillator.

h. Harmonic content (RMS voltage): 3 percent single harmonic, maximum; 5 percent total maximum with linear load. Voltage THD shall be less than 7 percent with up to 50 percent nonlinear load and a crest factor of less than 3 to 1.

i. Load power factor operating range: 1.0 to 0.8 lagging.

j. Phase displacement:

(1) Balanced load: Plus or minus 1 degree of bypass input.

(2) 50 percent load imbalance phase-to-phase: Plus or minus 3 degrees of bypass input.

k. Wave-form deviation factor: 5 percent at no load.

l. Overload capability (at full voltage) (excluding battery):

(1) 125 percent load for 10 minutes.

(2) 150 percent load for 30 seconds.

(3) 300 percent load for one cycle after which it shall be current limited to 150 percent until fault is cleared or UPS goes to bypass.

m. Load sharing of parallel modules: Plus or minus 5 percent of average load per module.

2.3.7 Transient Response

2.3.7.1 Voltage Transients

a. 50 percent load step/0 percent to 50 percent load: Plus or minus 8 percent.

b. 50 percent load step/50 percent to 100 percent load: Plus or minus 8 percent.

c. Loss or return of ac input: Plus or minus 1 percent.

d. Loss or return of redundant module:

(1) Manually: Plus or minus 8 percent.

(2) Automatically: Plus or minus 8 percent.

e. Automatic transfer of load from UPS to bypass: Plus or minus 4 percent.

f. Manual retransfer of load from bypass to UPS: Plus or minus 4 percent.

g. Response time: Recovery to 99 percent steady-state condition within 50 milliseconds after any of the above transients.

2.3.7.2 Frequency

a. Transients: Plus or minus 0.5 Hz maximum.

b. Slew Rate: 1.0 Hz maximum per second.

2.3.8 Efficiency

a. Minimum Single-Module Efficiency: 85 percent at full load kW.

b. Minimum System Efficiency: 89 percent at full system load kW.

2.4 UPS MODULE

2.4.1 General Description

UPS module shall consist of a rectifier/charger unit and a 3-phase inverter unit with their associated transformers, synchronizing equipment, protective devices and accessories as required for operation.

2.4.2 Rectifier/Charger Unit

Rectifier/charger unit shall be solid state and shall provide direct current to the dc bus.

2.4.2.1 Input Protective Device

Rectifier/charger unit shall be provided with an input protective device. The protective device shall be sized to accept simultaneously the full-rated load and the battery recharge current. The protective device shall be capable of shunt tripping and shall have 14,000 amperes symmetrical interrupting capacity. The protective device shall have provision for locking in the "off" position. A surge suppression device shall be installed at the UPS input to protect against lightning and switching surges.

2.4.2.2 Power Transformer

A dry-type, isolated-winding power transformer shall be used for the rectifier unit. The transformer's hottest spot winding temperature shall not exceed the temperature limit of the transformer insulation material when operating at full load. The transformer insulation shall be Class H, 150 degrees C rise. Transformer connections shall be accessible from the front.

2.4.2.3 Sizing

Rectifier/charger unit shall be sized for the following two simultaneous operating conditions:

a. Supplying the full rated load current to the inverter.

b. Recharging a fully-discharged battery to 95 percent of rated ampere-hour capacity within ten times the discharge time after

normal ac power is restored, with the input protective device closed.

2.4.2.4 Battery Charging Current

a. Primary current limiting: Battery-charging current shall be voltage regulated and current limited. The battery-charging current limit shall be separately adjustable from 2 percent to 25 percent of the maximum discharge current. After the battery is recharged, the rectifier/charger unit shall maintain the battery at full float charge until the next operation under input power failure. Battery charger shall be capable of providing equalizing charge to the battery.

b. Second step current limiting: The rectifier/charger unit shall also have a second-step battery current limit. This second-step current limit shall sense actual battery current and reduce the input power demand for battery recharging to 50 percent (adjustable from 30 percent to 70 percent) of the normal rate without affecting the system's ability to supply full-rated power to the connected load. The second-step current-limit circuit shall be activated by a dry contact signal from the generator set controls and shall prevent normal rate battery recharging until utility power is restored.

2.4.2.5 Output Filter

Rectifier/charger unit shall have an output filter to minimize ripple current supplied to the battery; the ripple current into the battery shall not exceed 3 percent RMS.

2.4.2.6 dc Voltage Adjustment

Rectifier/charger unit shall have manual means for adjusting dc voltage for battery equalization, to provide voltage within plus 10 percent of nominal float voltage.

2.4.2.7 Battery Isolation Protective Device

Module shall have a dc protective device to isolate the module from the battery system. The protective device size and interrupting rating shall be as required by system capacity and shall incorporate a shunt trip as required by circuit design. The protective device shall have provision for locking in the "off" position.

2.4.3 Inverter Unit

Inverter unit shall be a solid-state device capable of accepting power from the dc bus and providing ac power within specified limits.

2.4.3.1 Output Overload

The inverter shall be able to sustain an overload as specified across its output terminals. The inverter shall not shut off, but shall continue to operate within rated parameters, with inverse-time overload shutdown protection.

2.4.3.2 Synchronism

The inverter shall normally operate in phase-lock and synchronism with the bypass source. Should the bypass source frequency deviate beyond 60 Hz by more than 0.5 Hz, the internal frequency oscillators contained in the power module shall be used to derive the new frequency reference. Upon restoration of the bypass source within the required tolerance, the inverter shall resynchronize with that source at a slew rate not exceeding the specified rate. The oscillator shall be temperature compensated and shall be manually adjustable. The design of the oscillator and synchronizing circuits shall be such that failure of any associated component, connector pin, terminal lead wire or dc power source in either the open or shorted mode shall affect only one inverter leg. Such failure shall not cause transient disturbance of the critical load in excess of the stated limits.

2.4.3.3 Phase Balance

Electronic controls shall be incorporated to provide individual phase voltage compensation to obtain phase balance.

2.4.3.4 Modular Construction

Each control logic printed circuit board shall be electrically and physically packaged on an individual plug-in module with separate indication and adjustments.

2.4.3.5 Output Protective Device

The output protective device shall be capable of shunt tripping and shall have interrupting capacity as specified. Protective device shall have provision for locking in the "off" position.

2.4.3.6 Output Transformer

The inverter output transformer shall be similar to the input transformer and shall be capable of handling up to K-13 nonlinear loads as described in IEEE C57.110.

2.4.4 External Protection

UPS module shall have built-in self-protection against undervoltage, overvoltage, overcurrent and surges introduced on the ac input source and/or the bypass source. The UPS system shall sustain input surges without damage in accordance with IEEE C62.41. The UPS shall also have built-in self-protection against overvoltage and voltage surges introduced at the output terminals by paralleled sources, load switching, or circuit breaker operation in the critical load distribution system.

2.4.5 Internal Protection

UPS module shall be self-protected against overcurrent, sudden changes in output load and short circuits at the output terminals. UPS module shall be provided with output reverse power detection which shall cause that module to be disconnected from the critical load bus when output reverse power is present. UPS module shall have built-in protection against permanent damage to itself and the connected load for predictable types of failure within

itself and the connected load. At the end of battery discharge limit, the module shall shut down without damage to internal components.

2.5 STATIC BYPASS TRANSFER SWITCH

A static bypass transfer switch shall be provided as an integral part of the UPS and shall consist of a static switch and a bypass protective device or bypass switch. The control logic shall contain an automatic transfer circuit that senses the status of the inverter logic signals and alarm conditions and provides an uninterrupted transfer of the load to the bypass ac power source, without exceeding the transient limits specified herein, when a malfunction occurs in the UPS or when an external overload condition occurs. The power section of the static bypass transfer switch shall be provided as a plug-in type assembly to facilitate maintenance. The static bypass transfer switch shall be used to connect the bypass ac power source or the UPS inverter output to the critical load when required, and shall have the following features:

2.5.1 Uninterrupted Transfer

The static bypass transfer switch shall automatically cause the bypass ac power source to assume the critical load without interruption when the bypass control logic senses one of the following conditions and the UPS inverter output is synchronized to the bypass ac power source:

a. Inverter overload exceeds unit's rating.

b. Battery protection period is expired and bypass is available.

c. Inverter failure.

2.5.2 Manual Transfer

It shall be possible to make a manually-initiated static transfer from the system status and control panel by turning the UPS inverter off.

2.5.3 Automatic Uninterrupted Forward Transfer

The static bypass transfer switch shall automatically forward transfer, without interruption after the UPS inverter is turned "on", or after an instantaneous overload-induced reverse transfer has occurred and the load current has returned to less than the unit's 100 percent rating.

2.5.4 Forced Transfer

The control logic circuitry shall provide the means of making a forced or reverse transfer of the static bypass transfer switch on an interrupted basis. Minimum interruption shall be 200 milliseconds when the UPS inverter is not synchronized to the bypass ac power source.

2.5.5 Overload Ratings

The static bypass transfer switch shall withstand the following overload conditions:

a. 2000 percent of UPS output rating for two cycles.

b. 200 percent of UPS output rating for 5 minutes.

c. 125 percent of UPS output rating for 10 minutes.

2.6 MAINTENANCE BYPASS SWITCH

2.6.1 General

A maintenance bypass switch shall be provided as an integral part of the UPS and located within the UPS module. The maintenance bypass switch shall provide the capability to continuously support the critical load from the bypass ac power source while the UPS is isolated for maintenance. The maintenance bypass switch shall be housed in an isolated compartment inside the UPS cabinet in such a way that service personnel will not be exposed to electrically live parts while maintaining the unit. Switch shall contain a maintenance bypass protective device and a module isolation protective device.

2.6.2 Load Transfer

The maintenance bypass switch shall provide the capability of transferring the critical load from the UPS static bypass transfer switch to maintenance bypass and then back to the UPS static bypass transfer switch with no interruption to the critical load.

2.7 MODULE CONTROL PANEL

2.7.1 Module Meters

2.7.1.1 Monitored Functions

The following functions shall be monitored and displayed:

a. Input voltage, phase-to-phase (all three phases).

b. Input current, all three phases.

c. Input frequency.

d. Battery voltage.

e. Battery current (charge/discharge).

f. Output voltage, phase-to-phase and phase-to-neutral (all three phases).

g. Output current, all three phases.

h. Output frequency.

i. Output kilowatts.

j. Elapsed time meter to indicate hours of operation, 6 digits.

k. Bypass voltage, phase-to-phase and phase-to-neutral (all three phases).

l. Output kilovars.

m. Output kilowatt hours, with 15-minute demand attachment.

2.7.1.2 Meter Construction

Meters shall have 1 percent accuracy and shall be digital type (minimum 4 significant digits).

2.7.2 Module Alarm Indicators

Module shall have indicators for the following alarm items. Any one of these conditions shall turn on an audible alarm and the appropriate summary indicator. Each new alarm shall register without affecting any previous alarm.

a. Input ac power source failure.

b. Input protective device open.

c. Output protective device open.

d. Overload.

e. Overload shutdown.

f. dc overvoltage.

g. dc ground fault.

h. Low battery.

i. Battery discharged.

j. Battery protective device open.

k. Blower failure.

l. Input transformer overtemperature.

m. Inverter transformer overtemperature.

n. Equipment overtemperature.

o. Operating on internal oscillator.

p. Fuse blown.

q. Control power failure.

r. Charger off.

s. Inverter off.

t. Emergency off.

2.7.3 Module Emergency Off Button

Pressing the emergency off button shall cause the affected module to be disconnected from the system, via its input protective device, output protective device, and battery protective device. Activation of this button shall not affect the operation of the remainder of the system.

2.8 SYSTEM CONTROL CABINET

2.8.1 System Control Panel

A separate control panel shall be provided for the overall UPS system. The panel shall be on the front surface of the system cabinet. The controls, meters, alarms and indicators for operation of the UPS system shall be on this panel.

2.8.1.1 Emergency Off

Pressing the emergency off button shall cause the module input, output, and battery circuit breakers to open, completely isolating the UPS system from sources of power. The critical load shall be transferred to the bypass source when this occurs.

2.9 REMOTE MONITORING PANEL

2.9.1 Indicators

Minimum display shall include the following indicators:

a. Load on UPS.

b. Load on battery.

c. Load on bypass.

d. Low battery.

e. Summary alarm.

f. New alarm (to alert the operator that a second summary alarm condition has occurred).

2.9.2 Audible Alarm

Any single indicator shall also turn on the audible alarm. An audible alarm test/reset button and lamp test/reset button shall be included. This reset button shall not affect nor reset the alarm on the module or on the system cabinet.

2.10 BATTERY SYSTEM

2.10.1 General

A storage battery with sufficient ampere-hour rating to maintain UPS output at full capacity for the specified duration shall be provided for each UPS module. The battery shall be of heavy-duty, industrial design suitable for UPS service. The cells shall be provided with flame arrestor vents,

intercell connectors and cables, cell-lifting straps, cell-numbering sets, and terminal grease. Intercell connectors shall be sized to maintain terminal voltage within voltage window limits when supplying full load under power failure conditions. Cell and connector hardware shall be stainless steel of a type capable of resisting corrosion from the electrolyte used.

2.10.2 Battery Ratings

a. Type: nickel cadmium.

b. Specific gravity when fully charged: 1.215.

c. End voltage 1.67 volts per cell.

d. Float voltage: 2.15 to 2.22 volts per cell.

e. Equalizing voltage: 2.33 to 2.38 volts per cell.

2.10.3 Battery Construction

The battery shall be of the valve-regulated, sealed, non-gassing, recombinant type.

2.10.4 Cell-Terminal Covers

Acid-resistant transparent cell-terminal covers not exceeding 6 feet in length and with vent holes drilled on top where needed shall be provided.

2.10.5 Seismic Requirements

The battery support system shall conform to ICBO-099S94requirements for seismic zone 3.

2.11 FACTORY TESTING

2.11.1 General

The UPS system shall be factory tested to meet the requirements specified using a test battery (not the battery to be supplied with the system). UPS module shall be factory load tested as an independent assembly with 3-phase ac input power and with battery power for a minimum of 8 hours, with meter readings taken every 30 minutes. Load shall be balanced at rated kVA and rated power factor. Factory tests for the UPS module shall be run under full load, and will be witnessed by the Government. Should a malfunction occur, the problem shall be corrected and the test shall be repeated. As a minimum, the factory tests shall include the parameters described in paragraphs ac Input, ac Output, Transient Response and Efficiency. The tests shall encompass all aspects of operation, such as module failure, static bypass operation, battery failure, input power failure and overload ratings. The Government shall be notified in writing at least 2 weeks before testing. Factory-test time shall not be used for system debugging and/or checkout. Such work shall be done prior to notifying the Government that the system is ready for testing. Factory tests shall be performed during normal business hours. The system shall be interconnected and tested for an additional 8 hours to ensure proper wiring and performance.

2.11.2 Transient Tests

Transient tests shall be conducted using high-speed oscillograph type recorders to demonstrate the operation of the components to the satisfaction of the Government. These tests shall include 50 percent to 100 percent load changes, manual transfer, manual retransfer, low dc bus initiated transfer and low ac output bus transfer. A recording instrument equipped with an event marker shall be used.

2.11.3 Efficiency Tests

Testing for efficiency shall be performed at zero output up to 100 percent of stated kVA output in 25 percent steps, 0.8 power factor, with battery fully charged and floating on the dc bus, with nominal input voltage, and with modules connected to the system to represent actual operating conditions.

2.12 INSPECTION

Inspection before shipment is required. The manufacturer shall notify the Government at least 2 weeks before shipping date so that an inspection can be made.

PART 3 EXECUTION

3.1 INSTALLATION

The UPS system shall be set in place, wired and connected in accordance with the approved shop drawings and manufacturer's instructions. The UPS battery shall be shipped to the site dry.

3.2 FIELD SUPERVISION, STARTUP AND TESTING

3.2.1 General

The services of a manufacturer's representative who is experienced in the installation, adjustment, and operation of the equipment specified shall be provided. The representative shall supervise the installation, adjustment and testing of the equipment. The representative shall check the wiring between equipment, start up the system, and field test the functions, interlocks and protective devices to ensure that the total system is functioning according to the intent of the design. The field tests shall be performed under the supervision of a factory-trained representative of the equipment manufacturer and witnessed by the Government. The Government shall be given 2 weeks written advance notice of the date and time when testing will be conducted.

3.2.2 Field Tests

As a minimum, the startup and field test procedures shall include the following:

a. Ensure that shipping members have been removed.

b. Check for damage (dents, scratches, frame misalignment, damage to panel devices, etc).

c. Ensure that interiors are free of foreign materials, tools and dirt.

d. Attach a phase rotation meter to the UPS input, output and bypass buses, and observe proper phase sequences.

e. Torque test bus connections at shipping splits. Also torque test battery connections.

f. Check each electrical bus for proper phasing and identification.

g. Check and test selector switches and meters for proper operation.

h. Check doors for proper alignment and operation.

i. Check and test each protective device for proper mechanical and electrical operation.

j. Check protective device overcurrent trip settings.

k. Check and test indicating lights for proper operation and color.

l. Perform onsite field test procedures.

m. Demonstrate to the Government that the specified functions and interlocks have been implemented.

n. Provide IEEE Std 450 battery installation certification.

o. Check key interlock key numbers, if used, to ensure agreement with interlocking scheme.

3.3 POSTING FRAMED DATA AND INSTRUCTIONS

Framed data and instructions containing wiring and control diagrams under glass or in laminated plastic shall be posted where directed. Condensed operating instructions, prepared in typed form, shall be framed as specified above and posted beside the diagrams. The framed instructions shall be posted before acceptance testing of the system.

3.4 FIELD TRAINING

A field training course shall be provided for designated operating and maintenance staff members. Training shall be provided for a total period of 12 hours of normal working time and shall start after the system is functionally complete but prior to final acceptance test. Field training shall cover the items contained in the operating and maintenance manuals. The 12 hours shall be divided into two sessions of 6 hours each. Each session shall be conducted on a different day. A factory training videotape shall be provided as part of the training materials.

UPS SYSTEM PERFORMANCE DATA SHEET SHEET 1 OF 6

	ITEM	SPECIFIED	SUBMITTED
	SYSTEM OPERATION	SINGLE MODULE PARALLEL REDUNDANT PARALLEL NON REDUNDANT	
	NUMBER OF SYSTEMS	_____	
GENERAL	NUMBER OF MODULES IN EACH SYSTEM	PRESENT _____ FUTURE _____	
	SYSTEM CAPACITY: PRESENT FUTURE	 _____ kW/_____ kVA _____ kW/_____ kVA	
	BATTERY	ONE PER MODULE	
	MTBF (SYSTEM)		
	MTTR		
	MODULE RATING	_____ kW/_____ kVA	
MODULE	DC VOLTAGE WINDOW	_____ Vdc	
	INPUT/OUTPUT PROTECTIVE DEVICE INTERRUPT. RATING	_____ A SYM.	
	MANUFACTURER	_____	
	TYPE	LEAD-CALCIUM LEAD-ANTIMONY NICKEL-CADMIUM	
BATTERY	DISCHARGE TIME TO END VOLTAGE AT FULL LOAD	_____ MINUTES	
	END VOLTAGE	_____ V/CELL	
	SPECIFIC GRAVITY	_____	
	FLOAT VOLTAGE	_____ V/CELL	
	NUMBER OF CELLS	_____ CELLS	

UPS SYSTEM PERFORMANCE DATA SHEET SHEET 2 OF 6

	ITEM	SPECIFIED	SUBMITTED
BATT	HYDROGEN GENERATION	_____	
	RECHARGE TIME TO 95% CAPACITY	10 X DISCHARGE	
SYSTEM CABINET	PROTECTIVE DEVICE	AIR POWER, DRAW-OUT _____	
	MANUFACTURER	_____	
	INTERRUPTING RATE	_____ A SYM.	
	STATIC SWITCH	_____ A	
AC INPUT	VOLTS, LINE/LINE	_____ V	
	PHASES	3-PHASE, 3-WIRE _____	
	VOLTAGE RANGE	+ 10%, - 15%	
	FREQUENCY	50 60 Hz	
	FREQUENCY RANGE	+/- 5%	
	POWER WALK-IN 20% TO 100% LOAD	15 - 24 SECONDS	
	TOTAL HARMONIC DISTORTION REFLECTED-PRIMARY	5% MAX (CURRENT) _____	
	ORDER OF HARMONIC	_____	PERCENTAGE OF TOTAL
	2nd		
	3rd		
	4th		
	5th		
	6th		
	7th		
	8th		
	9th		
(FILL IN AS REQUIRED)			

	TRANSFORMER SUB-CYCLE INRUSH	_____ x FULL LOAD
	POWER FACTOR	0.8 0.9

UPS SYSTEM PERFORMANCE DATA SHEET SHEET 3 OF 6

	ITEM	SPECIFIED	SUBMITTED
	VOLTAGE, LINE-LINE	_____ V	
	PHASES	3-PHASE, 4-WIRE	
	POWER FACTOR	0.8 LAGGING, 1.0	
	VOLTAGE REGULATION		
	BALANCED LOAD	+/- 1.0%	
	50% IMBALANCE BETWEEN PHASES	+/- 2.0%	
	NO-LOAD MODULATION	+/- 1.0%	
	DRIFT (30 DAYS)	+/- 1.0%	
	VOLTAGE ADJUST.	+/- 5.0% MANUALLY	
AC OUTPUT	FREQUENCY	60 Hz	
	REGULATION	+/- 0.1%	
	DRIFT (24 HRS.)	+/- 0.1%	
	HARMONIC CONTENT		
	TOTAL (50% NON-LINEAR LOAD	7.0% MAX.	
	TOTAL (LINEAR LOAD)	5.0% MAX.	
	SINGLE HARMONIC (LINEAR LOAD)	3.0% MAX.	
	PHASE DISPLACEMENT		
	BALANCED LOAD	+/- 1.0 DEG. OF BYPASS	
	50% IMBALANCE	+/- 3.0 DEG. OF BYPASS	
	WAVE FORM DEVIATION FACTOR (NO LOAD)	5.0%	
	OVERLOAD CAPACITY		

125%	10 MINUTES
150%	30 SECONDS
300%	MOMENTARY

UPS SYSTEM PERFORMANCE DATA SHEET SHEET 4 OF 6

	ITEM	SPECIFIED	SUBMITTED
	LOAD SHARING AMONG MODULES	+/- 5.0% OF AVERAGE LOAD	
	VOLT. TRANSIENT RESPONSE		
	50% STEP LOAD 0% to 50%	+/- 8.0%	
	50% STEP LOAD 50% to 100%	+/- 8.0%	
	LOSS OR RETURN OF INPUT	+/- 1.0%	
	LOSS OR RETURN OF A REDUNDANT MODULE AUTOMATICALLY	+/- 8.0%	
	MANUALLY	+/- 8.0%	
A C O U T P U T	AUTO TRANSFER, AT FULL LOAD, FROM UPS TO BYPASS	+/- 4.0%	
	MANUAL TRANSFER, AT FULL LOAD, FROM BYPASS TO UPS	+/- 4.0%	
	RECOVERY TIME TO 99% STEADY-STATE COND.	50 MILLISECONDS	
	FREQUENCY TRANSIENT RESPONSE	+/- 0.5 Hz	
	SLEW RATE	1.0 Hz/SECOND	

UPS SYSTEM PERFORMANCE DATA SHEET SHEET 5 OF 6

	ITEM	SPECIFIED	SUBMITTED
AC OUTPUT	EFFICIENCY @ FULL LOAD		
	MODULE	_____%	
	SYSTEM	_____%	
	SYSTEM NOISE GEN. LEVEL @ 1.8 M		
	FROM EQUIPMENT	_____ DBA	
ENVIRONMENTAL	OPERATING AMBIENT TEMPERATURE	0 DEG. C to 40 50 DEG. C	
	STORAGE AMBIENT TEMPERATURE	-20 DEG. C to +60 DEG. C	
	BATTERY ROOM AMBIENT TEMP.	25 DEG. C NOMINAL	
	RELATIVE HUMIDITY (NON-CONDENSING)	0 - 95%	
	BAROMETRIC PRESSURE (ALTITUDE)		
	OPERATING		
	NON-OPERATING	12,200 M	
	HEAT REJECTION	_____	
	MODULE		
	SYSTEM		
PHYSICAL	MODULE	_____	
	SIZE		
	WEIGHT		
	SYSTEM CABINET	_____	

D SIZE
A WEIGHT
T
A

UPS SYSTEM PERFORMANCE DATA SHEET SHEET 6 OF 6

	ITEM	SPECIFIED	SUBMITTED
PHYSICAL DATA	BATTERY	_____	
	SEISMIC ZONE		
	RACKS SIZE		
	WEIGHT		
	CELLS SIZE		
	WEIGHT		
	DISCON- SIZE		
	NECT WEIGHT		

End of Section

SECTION 16670

LIGHTNING PROTECTION SYSTEM
12/88

PART 1 GENERAL

1.1 REFERENCES

The publications listed below form a part of this specification to the extent referenced. The publications are referred to in the text by basic designation only.

AMERICAN NATIONAL STANDARDS INSTITUTE (ANSI)

ANSI C135.30	(1988) Zinc-Coated Ferrous Ground Rods for Overhead or Underground Line Construction

NATIONAL FIRE PROTECTION ASSOCIATION (NFPA)

NFPA 70	(1996) National Electrical Code
NFPA 780	(1992) Lightning Protection Code

UNDERWRITERS LABORATORIES (UL)

UL-03	(1992) Electrical Construction Materials Directory
UL 96	(1985; Rev thru Dec 1988) Lightning Protection Components
UL 96A	(1982; Rev thru Jul 1990) Installation Requirements for Lightning Protection Systems
UL 467	(1984; Rev thru Nov 1986) Grounding and Bonding Equipment
UL 486A	(1991; R Oct 91) Wire Connectors and Soldering Lugs for Use with Copper Conductors

1.2 GENERAL REQUIREMENTS

1.2.1 Verification of Dimensions

The Contractor shall become familiar with all details of the work, verify all dimensions in the field, and shall advise the Contracting Officer of any discrepancy before performing the work. No departures shall be made without the prior approval of the Contracting Officer.

1.2.2 System Requirements

The system furnished under this specification shall consist of the standard products of a manufacturer regularly engaged in the production of lightning protection systems and shall be the manufacturer's latest UL approved design. The lightning protection system shall conform to NFPA 70 and NFPA

780, UL 96 and UL 96A, except where requirements in excess thereof are specified herein.

1.3 SUBMITTALS

Government approval is required for submittals with a "GA" designation; submittals having an "FIO" designation are for information only. The following shall be submitted in accordance with Section 01300 SUBMITTAL PROCEDURES:

SD-04 Drawings

Lightning Protection System; FIO.

Detail drawings consisting of a complete list of material, including manufacturer's descriptive and technical literature, catalog cuts, drawings, and installation instructions. Detail drawings shall demonstrate that the system has been coordinated and will function as a unit. Drawings shall show proposed layout and mounting and relationship to other parts of the work.

SD-13 Certificates

Materials and Equipment; GA.

Where material or equipment is specified to comply with requirements of UL, proof of such compliance. The label of or listing in UL-03 will be acceptable evidence. In lieu of the label or listing, a written certificate from an approved nationally recognized testing organization equipped to perform such services, stating that the items have been tested and conform to the requirements and testing methods of Underwriters Laboratories may be submitted. A letter of findings shall be submitted certifying UL inspection of lightning protection systems provided on the following facilities: Close Combat Tactical Facility, Ft. Lewis, WA.

PART 2 PRODUCTS

2.1 MATERIALS

2.1.1 General Requirements

No combination of materials shall be used that form an electrolytic couple of such nature that corrosion is accelerated in the presence of moisture unless moisture is permanently excluded from the junction of such metals. Where unusual conditions exist which would cause corrosion of conductors, conductors with protective coatings or oversize conductors shall be used. Where a mechanical hazard is involved, the conductor size shall be increased to compensate for the hazard or the conductors shall be protected by covering them with molding or tubing made of wood or nonmagnetic material. When metallic conduit or tubing is used, the conductor shall be electrically connected at the upper and lower ends.

2.1.2 Main and Secondary Conductors

Conductors shall be in accordance with NFPA 780 and UL 96 for Class I, Class II, or Class II modified materials as applicable.

2.1.2.1 Copper

Copper conductors used on nonmetallic stacks shall weigh not less than 170 kg per 300 m (375 pounds per thousand feet), and the size of any wire in the cable shall be not less than No. 15 AWG. The thickness of any web or ribbon used on stacks shall be not less than No. 12 AWG. Counterpoise shall be copper conductors not smaller than No. 1/0 AWG.

2.1.3 Air Terminals

Terminals shall be in accordance with UL 96 and NFPA 780. The tip of air terminals on buildings used for manufacturing, processing, handling, or storing explosives, ammunition, or explosive ingredients shall be a minimum of 600 mm above the ridge parapet, ventilator or perimeter.

2.1.4 Ground Rods

Rods made of copper-clad steel shall conform to UL 467 and galvanized ferrous rods shall conform to ANSI C135.30. Ground rods shall be not less than 19.1 mm (3/4 inch) in diameter and 3.048 m (10 feet) in length. Ground rods of copper-clad steel, stainless steel, galvanized ferrous, and solid copper shall not be mixed on the job.

2.1.5 Clamp-Type Connectors

Connectors for splicing conductors shall conform to UL 96, class as applicable, and UL 486A, Class 2, style and size as required for the installation.

2.1.6 Lightning Protection Components

Lightning protection components, such as bonding plates, air terminal supports, chimney bands, clips, and fasteners shall conform to UL 96, classes as applicable.

PART 3 EXECUTION

3.1 INTEGRAL SYSTEM

3.1.1 General Requirements

The lightning protection system shall consist of air terminals, roof conductors, down conductors, ground connections, and grounds, electrically interconnected to form the shortest distance to ground. All conductors on the structures shall be exposed except where conductors are in protective sleeves exposed on the outside walls. Secondary conductors shall interconnect with grounded metallic parts within the building. Interconnections made within side-flash distances shall be at or above the level of the grounded metallic parts.

3.1.1.1 Air Terminals

Air terminal design and support shall be in accordance with NFPA 780. Terminals shall be rigidly connected to, and made electrically continuous with, roof conductors by means of pressure connectors or crimped joints of T-shaped malleable metal and connected to the air terminal by a dowel or threaded fitting. Air terminals at the ends of the structure shall be set

not more than 600 mm (2 feet) from the ends of the ridge or edges and corners of roofs. Spacing of air terminals 600 mm (2 feet) in height on ridges, parapets, and around the perimeter of buildings with flat roofs shall not exceed 7.5 meters. In specific instances where it is necessary to exceed this spacing, the specified height of air terminals shall be increased not less than 50 mm for each 300 mm of increase over 7.5 meters. On large, flat or gently sloping roofs, as defined in NFPA 780, air terminals shall be placed at points of the intersection of imaginary lines dividing the surface into rectangles having sides not exceeding 15 m in length. Air terminals shall be secured against overturning either by attachment to the object to be protected or by means of a substantial tripod or other braces permanently and rigidly attached to the building or structure. Metal projections and metal parts of buildings, smokestacks, and other metal objects that do not contain hazardous materials and that may be struck but not appreciably damaged by lightning, need not be provided with air terminals. However, these metal objects shall be bonded to the lightning conductor through a metal conductor of the same unit weight per length as the main conductor. Where metal ventilators are installed, air terminals shall be mounted thereon, where practicable. Any air terminal erected by necessity adjacent to a metal ventilator shall be bonded to the ventilator near the top and bottom thereof. Where nonmetallic spires, steeples, or ventilators are present, air terminals shall be mounted thereon or to the side. In addition, where spires or steeples project more than 3.0 mabove the building, the conductor between the air terminal and metal roof shall be continued to the nearest down conductor and securely connected thereto.

3.1.1.2 Roof Conductors

Roof conductors shall be connected directly to the roof or ridge roll. Sharp bends or turns in conductors shall be avoided. Necessary turns shall have a radius of not less than 200 mm. Conductors shall preserve a downward or horizontal course and shall be rigidly fastened every 900 mm along the roof and down the building to ground. Metal ventilators shall be rigidly connected to the roof conductor at three places. All connections shall be electrically continuous. Roof conductors shall be coursed along the contours of flat roofs, ridges, parapets, and edges; and where necessary, over flat surfaces, in such a way as to join each air terminal to all the rest. Roof conductors surrounding tank tops, decks, flat surfaces, and flat roofs shall be connected to form a closed loop.

3.1.1.3 Down Conductors

Down conductors shall be electrically continuous from air terminals and roof conductors to grounding electrodes. Down conductors shall be coursed over extreme outer portions of the building, such as corners, with consideration given to the location of ground connections and air terminals. Each building or structure shall have not less than two down conductors located as widely separated as practicable, at diagonally opposite corners. On rectangular structures having gable, hip, or gambrel roofs more than 35 m long, there shall be at least one additional down conductor for each additional 15 m of length or fraction thereof. On rectangular structures having French, flat, or sawtooth roofs exceeding 75 m in perimeter, there shall be at least one additional down conductor for each 30 m of perimeter or fraction thereof. On an L- or T-shaped structure, there shall be at least one additional down conductor; on an H-shaped structure, at least two additional down conductors; and on a wing-built structure, at least one

additional down conductor for each wing. On irregularly shaped structures, the total number of down conductors shall be sufficient to make the average distance between them along the perimeter not greater than 30 meters. On structures exceeding 15 m in height, there shall be at least one additional down conductor for each additional 18 m of height or fraction thereof, except that this application will not cause down conductors to be placed about the perimeter of the structure at intervals of less than 15 meters. Additional down conductors shall be installed when necessary to avoid "dead ends" or branch conductors ending at air terminals, except where the air terminal is on a roof below the main protected level and the "dead end" or branch conductor is less than 5 m in length and maintains a horizontal or downward coursing. Down conductors shall be equally and symmetrically spaced about the perimeter of the structure. Down conductors shall be protected where necessary, to prevent mechanical injury to the conductor.

3.1.1.4 Ground Connections

Ground connections comprising continuations of down conductors from the structure to the grounding electrode shall securely connect the down conductor and ground in a manner to ensure electrical continuity between the two. All connections shall be of the clamp type. There shall be a ground connection for each down conductor. Metal water pipes and other large underground metallic objects shall be bonded together with all grounding mediums. Ground connections shall be protected from mechanical injury. In making ground connections, advantage shall be taken of all permanently moist places where practicable, although such places shall be avoided if the area is wet with waste water that contains chemical substances, especially those corrosive to metal.

3.1.1.5 Grounding Electrodes

A grounding electrode shall be provided for each down conductor located as shown. A driven ground shall extend into the earth for a distance of not less than 3.0 meters. Ground rods shall be set not less than 900 mm, nor more than 2.5 m, from the structures foundation. The complete installation shall have a total resistance to ground of not more than 25 ohms. Ground rods shall be tested individually prior to connection to the system and the system as a whole shall be tested not less than 24 hours after rainfall. When the resistance of the complete installation exceeds the specified value or two ground rods individually exceed 25 ohms, the Contracting Officer will be notified immediately. A counterpoise, where required, shall be of No. 1/0 copper cable or equivalent material having suitable resistance to corrosion and shall be laid around the perimeter of the structure in a trench not less than 600 mm deep at a distance not less than 900 mm nor more than 2.5 m from the nearest point of the structure. All connections between ground connectors and grounds or counterpoise, and between counterpoise and grounds shall be electrically continuous. Where so indicated on the drawings, an alternate method for grounding electrodes in shallow soil shall be provided by digging trenches radially from the building. The lower ends of the down conductors or their equivalent in the form of metal strips or wires are then buried in the trenches.

3.1.2 Steel Frame Building

The steel framework shall be made electrically continuous. Electrical continuity may be provided by bolting, riveting, or welding steel frame, unless a specific method is noted on the drawings. The air terminals shall

be connected to the structural steel framework at the ridge. Short runs of conductors shall be used as necessary to join air terminals to the metal framework so that proper placing of air terminals is maintained. Separate down conductors from air terminals to ground connections are not required. Where a grounded metal pipe water system enters the building, the structural steel framework and the water system shall be connected at the point of entrance by a ground connector. Connections to pipes shall be by means of ground clamps with lugs. Connections to structural framework shall be by means of nut and bolt or welding. All connections between columns and ground connections shall be made at the bottom of the steel columns. Ground connections to grounding electrons or counterpoise shall be run from not less than one-half of all the columns distributed equally around the perimeter of the structure at intervals averaging not more than 18 meters.

3.2 FENCES

Except as indicated below, metal fences that are electrically continuous with metal posts extending at least 600 mm into the ground require no additional grounding. Other fences shall be grounded on each side of every gate. Fences shall be grounded by means of ground rods every 300 to 450 m of length when fences are located in isolated places, and every 150 to 225 m when in proximity (30 m or less) to public roads, highways, and buildings. The connection to ground shall be made from the post where it is of metal and is electrically continuous with the fencing. All metal fences shall be grounded at or near points crossed by overhead lines in excess of 600 volts and at distances not exceeding 45 m on each side of line crossings.

3.3 INSPECTION

The lightning protection system will be inspected by the Contracting Officer to determine conformance with the requirements of this specification. No part of the system shall be concealed until so authorized by the Contracting Officer.

End of Section

SECTION 16710

PREMISES DISTRIBUTION SYSTEM
04/97

PART 1 GENERAL

1.1 REFERENCES

The publications listed below form a part of this specification to the extent referenced. The publications are referred to in the text by basic designation only.

ELECTRONIC INDUSTRIES ASSOCIATION (EIA)

EIA ANSI/TIA/EIA-568-A	(1995) Commercial Building Telecommunications Cabling Standard
EIA ANSI/TIA/EIA-569	(1990) Commercial Building Standard for Telecommunications Pathways and Spaces
EIA ANSI/TIA/EIA-606	(1993) Administration Standard for the Telecommunications Infrastructure of Commercial Buildings
EIA ANSI/TIA/EIA-607	(1994) Commercial building Grounding and Bonding Requirements for Telecommunications

INSULATED CABLE ENGINEERS ASSOCIATION (ICEA)

ICEA S-83-596	(1994) Fiber Optic Premises Distribution Cable

NATIONAL FIRE PROTECTION ASSOCIATION (NFPA)

NFPA 70	(1996) National Electrical Code

1.2 SYSTEM DESCRIPTION

The premises distribution system shall consist of inside-plant horizontal, riser, and backbone cables and connecting hardware to transport telephone and data (including LAN) signals between equipment items in a building.

1.3 ENVIRONMENTAL REQUIREMENTS

Connecting hardware shall be rated for operation under ambient conditions of 0 to 60 degrees C and in the range of 0 to 95 percent relative humidity, noncondensing.

1.4 QUALIFICATIONS

1.4.1 Minimum Contractor Qualifications

All work under this section shall be performed by and all equipment shall be furnished and installed by a certified Telecommunications Contractor, hereafter referred to as the Contractor. With the exception of furnishing

and installing conduit, electrical boxes, and pullwires, this work shall not be done by the Electrical Contractor. The Contractor shall have the following qualifications in Telecommunications Systems installation:

a. Contractor shall have a minimum of 3 years experience in the application, installation and testing of the specified systems and equipment.

b. All supervisors and installers assigned to the installation of this system or any of its components shall have factory certification from each equipment manufacturer that they are qualified to install and test the provided products. General electrical trade staff (electricians) shall not be used for the installation of the premises distribution system cables and associated hardware.

c. All installers assigned to the installation of this system or any of its components shall have a minimum of 3 years experience in the installation of the specified copper and fiber optic cable and components.

1.4.2 Minimum Manufacturer Qualifications

The equipment and hardware provided under this contract will be from manufacturers that have a minimum of 3 years experience in producing the types of systems and equipment specified.

1.5 SUBMITTALS

Government approval is required for submittals with a "GA" designation; submittals having an "FIO" designation are for information only. The following shall be submitted in accordance with Section 01300 SUBMITTAL PROCEDURES:

SD-01 Data

Spare Parts; FIO.

Lists of spare parts, tools, and test equipment for each different item of material and equipment specified, after approval of detail drawings, not later than 2 months prior to the date of beneficial occupancy. The data shall include a complete list of parts and supplies, with current unit prices and source of supply, and a list of spare parts recommended for stocking.

SD-04 Drawings

Premises Distribution System; GA.

Detail drawings including a complete list of equipment and material. Detail drawings shall contain complete wiring and schematic diagrams and other details required to demonstrate that the system has been coordinated and will function properly as a system. Drawings shall include vertical riser diagrams, equipment rack details, elevation drawings of telecommunications closet walls, outlet face plate details for all outlet configurations, sizes and types of all cables, conduits, and cable trays. Drawings shall show proposed layout and anchorage of equipment and appurtenances, and equipment

relationship to other parts of the work including clearance for maintenance and operation.

Record Drawings; GA.

Record drawings for the installed wiring system infrastructure per EIA ANSI/TIA/EIA-606. The drawings shall show the location of all cable terminations and location and routing of all backbone and horizontal cables. The identifier for each termination and cable shall appear on the drawings.

SD-06 Instructions

Manufacturer's Recommendations; GA.

Where installation procedures, or any part thereof, are required to be in accordance with the recommendations of the manufacturer of the material being installed, printed copies of these recommendations, prior to installation shall be provided. Installation of the item will not be allowed to proceed until the recommendations are received and approved.

SD-08 Statements

Test Plan; GA.

Test plan defining the tests required to ensure that the system meets technical, operational and performance specifications, 60 ays prior to the proposed test date. The test plan must be approved before the start of any testing. The test plan shall identify the capabilities and functions to be tested, and include detailed instructions for the setup and execution of each test and procedures for evaluation and documentation of the results.

Qualifications; GA.

The qualifications of the Manufacturer, Contractor, and the Installer to perform the work specified herein. This shall include proof of the minimum qualifications specified herein.

SD-09 Reports

Test Reports; FIO.

Test reports in booklet form with witness signatures verifying execution of tests. Test results will also be provided on 89 mm diskettes in ASCII format. Reports shall show the field tests performed to verify compliance with the specified performance criteria. Test reports shall include record of the physical parameters verified during testing. Test reports shall be submitted within 7 14 days after completion of testing.

SD-13 Certificates

Premises Distribution System; GA.

Written certification that the premises distribution system complies with the EIA ANSI/TIA/EIA-568-A, EIA ANSI/TIA/EIA-569, and EIA ANSI/TIA/EIA-606 standards.

Materials and Equipment; GA.

Where materials or equipment are specified to conform, be constructed or tested to meet specific requirements, certification that the items provided conform to such requirements. Certification by a nationally recognized testing laboratory that a representative sample has been tested to meet the requirements, or a published catalog specification statement to the effect that the item meets the referenced standard, will be acceptable as evidence that the item conforms. Compliance with these requirements does not relieve the Contractor from compliance with other requirements of the specifications.

Installers; GA.

The Contractor shall submit certification that all the installers are factory certified to install and test the provided products.

SD-18 Records

Record Keeping and Documentation; GA.

Documentation on cables and termination hardware in accordance with EIA ANSI/TIA/EIA-606.

1.6 DELIVERY AND STORAGE

Equipment delivered and placed in storage shall be stored with protection from the weather, humidity and temperature variation, dirt and dust or other contaminants.

1.7 OPERATION AND MAINTENANCE MANUALS

Commercial off the shelf manuals shall be furnished for operation, installation, configuration, and maintenance for all products provided as a part of the premises distribution system. Specification sheets for all cable, connectors, and other equipment shall be provided.

PART 2 PRODUCTS

2.1 MATERIALS AND EQUIPMENT

Materials and equipment shall be the standard products of a manufacturer regularly engaged in the manufacture of the products and shall be the manufacturer's latest standard design that has been in satisfactory use for at least 1 year prior to installation. Materials and equipment shall conform to the respective publications and other requirements specified below and to the applicable requirements of NFPA 70.

2.2 UNSHIELDED TWISTED PAIR CABLE SYSTEM

2.2.1 Horizontal Cable

Horizontal cable shall meet the requirements of EIA ANSI/TIA/EIA-568-A for Category 3 or 5 (as shown) horizontal cable. Cable shall be label-verified. Cable jacket shall be factory marked at regular intervals indicating verifying organization and performance level. Conductors shall be solid untinned copper 24 AWG. Cable shall be rated CMP per NFPA 70.

2.2.2 Connecting Hardware

Connecting and cross-connecting hardware shall be the same category as the cable it serves. Hardware shall be in accordance with and EIA ANSI/TIA/EIA-568-A.

2.2.2.1 Telecommunications Outlets

Modular jacks shall be the same category as the cable they terminate and shall meet the requirements of EIA ANSI/TIA/EIA-568-A. Modular jack pin/pair configuration shall be T568A per EIA ANSI/TIA/EIA-568-A. Modular jacks shall be keyed. Faceplates shall be provided and shall be in color, impact resistant plastic. Mounting plates shall be provided for system furniture and shall match the system furniture in color. Outlet assemblies used in the premises distribution system shall consist of modular jacks assembled into both simplex and duplex outlet assemblies in single or double gang covers as indicated on the drawings. The modular jacks shall conform to the requirements of EIA ANSI/TIA/EIA-568-A, Category 3 or 5 (as shown).

2.2.2.2 Terminal Blocks

Terminal blocks shall be wall mounted wire termination units consisting of insulation displacement connectors mounted in plastic blocks, frames or housings. Blocks shall be type 110 which meet the requirements of EIA ANSI/TIA/EIA-568-A for category 3 or 5 as shown. Blocks shall be mounted on standoffs and shall include cable management hardware. Insulation displacement connectors shall terminate 22 or 24 gauge solid copper wire as a minimum, and shall be connected in pairs so that horizontal cable and connected jumper wires are on separate connected terminals.

2.3 FIBER OPTIC CABLE SYSTEM

2.3.1 Backbone Cable

2.3.1.1 Singlemode

Singlemode fiber optic backbone cable shall meet the requirements of ICEA S-83-596 and the following: operation at a center wavelength of 1310 nm; core/cladding diameter 8.3 nominal/125 micrometer; maximum attenuation 2.0 dB/km at 1300 nm, 1.75 dB/km at 1550 nm. Numerical aperture for each fiber shall be a minimum of 0.10. Cable construction shall be tight buffered type. Cable shall be imprinted with fiber count and aggregate length at regular intervals. Individual fibers shall be color coded for identification. Cable shall be rated OFNP per NFPA 70.

2.4 EQUIPMENT RACKS

2.4.1 Floor Mounted Open Frame

Floor mounted equipment racks shall be welded steel relay racks with uprights to mount equipment 480 mm (19 inches) wide. Uprights shall be 75 mm deep channel, 32 mm wide, drilled and tapped 12-24 in a 13 mm pattern. Racks shall be provided with a standard top crossmember, and predrilled base plate to allow floor fastening. Open frame equipment racks shall be 2.1 m in height and painted gray. AC outlets shall be provided as shown.

2.4.2 Cable Guides

Cable guides shall be specifically manufactured for the purpose of routing cables, wires and patch cords horizontally and vertically on 580 mm (23 inch) equipment racks. Cable guides shall consist of ring or bracket-like devices mounted on rack panels for horizontal use or individually mounted for vertical use. Cable guides shall mount to racks by screws and/or nuts and lockwashers.

2.5 EQUIPMENT MOUNTING BACKBOARD

Plywood backboards shall be provided, sized as shown, painted with white or light colored paint.

2.6 TELECOMMUNICATIONS OUTLET BOXES

Electrical boxes for telecommunication outlets shall be 117 mm square by 53 mm deep with minimum 9 mm deep single or two gang plaster ring as shown. Provide a minimum 25 mm conduit.

PART 3 EXECUTION

3.1 INSTALLATION

System components and appurtenances shall be installed in accordance with NFPA 70, manufacturer's instructions and as shown. Necessary interconnections, services, and adjustments required for a complete and operable signal distribution system shall be provided. Components shall be labeled in accordance with EIA ANSI/TIA/EIA-606. Penetrations in fire-rated construction shall be firestopped in accordance with Section 07270 FIRESTOPPING. Conduits, outlets and raceways shall be installed in accordance with Section 16415 ELECTRICAL WORK, INTERIOR. Wiring shall be installed in accordance with EIA ANSI/TIA/EIA-568-A and as specified in Section 16415 ELECTRICAL WORK, INTERIOR. Wiring, and terminal blocks and outlets shall be marked in accordance with EIA ANSI/TIA/EIA-606. Cables shall not be installed in the same cable tray, utility pole compartment, or floor trench compartment with ac power cables. Cables not installed in conduit or wireways shall be properly secured and neat in appearance and, if installed in plenums or other spaces used for environmental air, shall comply with NFPA 70 requirements for this type of installation.

3.1.1 Telecommunications Outlets

3.1.1.1 Faceplates

As a minimum each jack shall be labeled as to its function and a unique number to identify cable link.

3.1.1.2 Cables

Unshielded twisted pair and fiber optic cables shall have a minimum of 150 mm of slack cable loosely coiled into the telecommunications outlet boxes. Minimum manufacturers bend radius for each type of cable shall not be exceeded.

3.1.1.3 Pull Cords

Pull cords shall be installed in all conduit serving telecommunications outlets which do not initially have fiber optic cable installed.

3.1.2 Terminal Blocks

Terminal blocks shall be mounted in orderly rows and columns. Adequate vertical and horizontal wire routing areas shall be provided between groups of blocks. Industry standard wire routing guides shall be utilized.

3.1.3 Fiber Optic Patch Panels

Patch panels shall be mounted in equipment racks with sufficient ports to accommodate the installed cable plant plus 10 percent spares. A slack loop of fiber shall be provided within each panel. Loop shall be 900 mm in length. The outer jacket of each cable entering a patch panel shall be secured to the panel to prevent movement of the fibers within the panel, using clamps or brackets specifically manufactured for that purpose.

3.1.4 Equipment Racks

Open frame equipment racks shall be bolted to the floor. Cable guides shall be bolted or screwed to racks. Racks shall be installed level. Ganged racks shall be bolted together. Ganged rack cabinets shall have adjacent side panels removed. Wall mounted racks shall be secured to the mounting surface to prevent fully loaded racks from separating from the mounting surface.

3.1.5 Rack Mounted Equipment

Equipment to be rack mounted shall be securely fastened to racks by means of the manufacturer's recommended fasteners.

3.2 TERMINATION

Cables and conductors shall sweep into termination areas; cables and conductors shall not bend at right angles. Manufacturer's minimum bending radius shall not be exceeded. When there are multiple system type drops to individual workstations, relative position for each system shall be maintained on each system termination block or patch panel.

3.2.1 Fiber Optic Cable

Each fiber shall have connectors installed. The pull strength between the connector and the attached fiber shall be not less than 11.3 kg. The mated pair loss, without rotational optimization, shall not exceed 1.0 dB. Fiber optic connectors shall be installed per EIA ANSI/TIA/EIA-568-A.

3.3 GROUNDING

Signal distribution system ground shall be installed in the telecommunications entrance facility and in each telecommunications closet in accordance with EIA ANSI/TIA/EIA-607 and Section 16415ELECTRICAL WORK, INTERIOR. Equipment racks shall be connected to the electrical safety ground.

3.4 ADDITIONAL MATERIALS

The Contractor shall provide the following additional materials required for facility startup.

a. 10 of each type outlet.

b. 10 of each type cover plate.

c. 1 of each type terminal block for each telecommunications closet.

d. 4 Patch cords of 3 m for each telecommunications closet.

e. 1 Set of any and all special tools required to establish a cross connect and to change and/or maintain a terminal block.

3.5 TESTING

Materials and documentation to be furnished under this specification are subject to inspections and tests. All components shall be terminated prior to testing. Equipment and systems will not be accepted until the required inspections and tests have been made, demonstrating that the signal distribution system conforms to the specified requirements, and that the required equipment, systems, and documentation have been provided.

End of Section

SECTION 16711

TELEPHONE SYSTEM, OUTSIDE PLANT
04/97

PART 1 GENERAL

1.1 REFERENCES

The publications listed below form a part of this specification to the extent referenced. The publications are referred to in the text by basic designation only.

AMERICAN SOCIETY FOR TESTING AND MATERIALS (ASTM)

ASTM A 228	(1993) Steel Wire, Music Spring Quality
ASTM C 338	(1993) Softening Point of Glass
ASTM D 2239	(1994) Polyethylene (PE) Plastic Pipe (SIDR-PR) Based on Controlled Inside Diameter

ELECTRONIC INDUSTRIES ASSOCIATION (EIA)

EIA ANSI/EIA/TIA-455-25B	(1996) FOTP-25 Repeated Impact Testing of Fiber Optic Cables and Cable Assemblies
EIA ANSI/EIA/TIA-455-30B	(1991) FOTP-30 Frenquency Domain Measurement of Multimode Optical Fiber Information Transmission Capacity
EIA ANSI/EIA-455-33A	(1987) FOTP-33 Fiber Optic Cable Tensile Loading and Bending Test
EIA ANSI/TIA/EIA-455-41A	(1993) FTOP-41 Compressive Loading Resistance of Fiber Optic Cable
EIA ANSI/EIA/TIA-455-46A	(1990) FOTP-46 Spectral Attenuation Measurement for Long-Length, Graded-Index Optical Fibers
EIA ANSI/EIA/TIA-455-47B	(1992) FOTP-47 Output Far Field Radiation Pattern Measurement
EIA ANSI/EIA/TIA-455-51A	(1991) FOTP-51 Pulse Distortion Measurement of Multimode Glass Optical Fiber Information Transmission Capacity
EIA ANSI/EIA/TIA-455-53A	(1990) FOTP-53 Attenuation by Substitution Measurement for Multimode Graded-Index Optical Fibers or Fiber Assemblies Used in Long Length Communications Systems
EIA ANSI/EIA-455-65	(1988) FOTP-65 Optical Fiber Flexure Test

EIA ANSI/EIA-455-81A	(1992) FOTP-81 Compound Flow (Drip) Test for Filled Fiber Optic Cable
EIA ANSI/EIA/TIA-455-82B	(1992) FOTP-82 Fluid Penetration Test for Fluid-Blocked Fiber Optic Cable

INSULATED CABLE ENGINEERS ASSOCIATION (ICEA)

ICEA S-56-434	(1983; R 1991) Polyolefin Insulated Communication Cables for Outdoor Use

INSTITUTE OF ELECTRICAL AND ELECTRONICS ENGINEERS (IEEE)

IEEE C2	(1997) National Electrical Safety Code

NATIONAL FIRE PROTECTION ASSOCIATION (NFPA)

NFPA 70	(1996) National Electrical Code

RURAL ELECTRIFICATION ADMINISTRATION (REA)

REA PC-2	(1995) Splicing Copper and Fiber Optic Cables
REA PC-4	(1976) Acceptance Tests and Measurements of Telephone Plant
REA PE-33	(1985) Shield Bonding Connectors
REA PE-39	(1993) REA Specification for Filled Telephone Cables
REA PE-60	(1979) Trunk Carrier Systems
REA PE-74	(1985) Filled Splice Closures
REA PE-89	(1993) Filled Telephone Cables with Expanded Insulation
REA TE&CM 823	(1980; R Aug 1990) Electrical Protection by Use of Gas Tube Arrestors

UNDERWRITERS LABORATORIES (UL)

UL 497	(1995; Rev thru May 1996) Protectors for Paired Conductor Communication Circuits

1.2 SUBMITTALS

Government approval is required for submittals with a "GA" designation; submittals having an "FIO" designation are for information only. The following shall be submitted in accordance with Section 01300 SUBMITTAL PROCEDURES:

SD-01 Data

Spare Parts; FIO.

Data lists of spare parts, tools, and test equipment for each different item of material and equipment specified, after approval of the detail drawings and not later than 2 months prior to the date of beneficial occupancy. The data shall include a complete list of parts and supplies, with current unit prices and source of supply.

SD-04 Drawings

Telephone System; FIO.

Detail drawings consisting of a complete list of equipment and material including manufacturer's descriptive and technical literature, performance charts and curves, catalog cuts and installation instructions. Detail drawings shall also contain complete wiring and schematic diagrams and any other details required to demonstrate that the cable system has been coordinated and will properly support the switching and transmission systems identified in the specification and drawings. Drawings shall show proposed layout and anchorage of equipment and appurtenances, and equipment relationship to other parts of the work including clearance for maintenance and operations. System drawings showing final configuration, including the location, gauge, pair, duct and innerduct arrangement, or conductor assignment of outside plant, and protector and connector blocks layout at the termination points after installation.

SD-08 Statements

Test Plans; FIO.

Test plans shall define all tests required to ensure that the system meets specified required. The test plans shall define milestones for the tests, equipment, personnel, facilities, and supplies required. The test plans shall identify the capabilities and functions to be tested.

SD-09 Reports

Acceptance Tests; GA.

Test reports in booklet form showing all field tests performed, upon completion and testing of the installed system.

Installation Procedures; GA.

Where installation procedures, or any part thereof, are required to be in accordance with the recommendations of the manufacturer of the material being installed, printed copies of these recommendations, prior to installation. Installation of the item will not be allowed to proceed until the recommendations are received and approved.

SD-13 Certificates

Telephone System; GA.

Where materials or equipment are specified to conform to the standards or publications and requirements of FCC, REA, ANSI, ASTM, NFPA, EIA, or UL, proof that the items furnished under this section of the specification conform to the specified requirements.

1.3 DELIVERY AND STORAGE

All cable shall be shipped on reels. The diameter of the drum shall be at least 13 times the diameter of the cable. The reels shall be substantial and so constructed as to prevent damage during shipment and handling. The outer end of the cable shall be securely fastened to the reel head so as to prevent the cable from becoming loose in transit. The inner end of the cable shall project into a slot in the side of the reel, or into a housing on the inner slot of the drum, in such a manner and with sufficient length to make it available for testing. The inner end shall be fastened so as to prevent the cable from becoming loose during installation. End seals shall be applied to each of the cables to prevent moisture from entering the cable. The reels with cable shall be suitable for outside storage conditions when the temperature ranges from minus 40 degrees C to plus 65 degrees C, with relative humidity from 0 to 100 percent. Equipment, other than cable, delivered and placed in storage shall be stored with protection from the weather, humidity and temperature variation, dirt and dust, or other contaminants.

PART 2 PRODUCTS

2.1 STANDARD PRODUCTS

Materials and equipment shall be the standard products of a manufacturer regularly engaged in the manufacture of such products and shall be the manufacturer's latest standard design that has been in satisfactory use for at least 2 years prior to bid opening. Each major component of equipment shall have the manufacturer's name and type identified on the equipment.

2.2 DISTRIBUTION FRAME

2.2.1 Copper Conductor Type, Main Distribution Frame (MDF)

2.2.1.1 Protector Modules

The protector modules shall be of the three-electrode gas tube type. Protection modules shall be classified as light, medium, heavy, or maximum duty depending on their performance in categories of impulse life, maximum surge impulse and 60 Hz current carrying capacity as specified in REA TE&CM 823. The gas modules shall be fail-short and shall shunt high voltage to ground in less than 100 microseconds, shall have an external spark gap, and shall comply with UL 497.

2.2.2 Copper Conductor Type, Building Distribution Frame (BDF)

The BDF shall consist of a self-contained wall mounted unit providing a field cable stub, housing for termination and protector modules, and access for cross-connecting to inside wiring.

2.2.3 Fiber Optic Patch Panel

The patch panel shall provide a location for maintenance and cross-connecting of fiber optic cables. The panel shall be constructed of 0.125 inch minimum thick aluminum and have connectors which interface the inside plant fiber optic jumper cable with the outside plant fiber optic cable. Panels shall be equipped with engraved laminated plastic nameplates above each connector.

2.3 CABLE

2.3.1 Copper Conductor Cable

Copper conductor cable shall conform to the following:

2.3.1.1 Underground

REA PE-39 for cable smaller than 400 pair, and REA PE-39 or REA PE-89 for cable 400 pair or larger.

2.3.2 Fiber Optic Cable

Reeled fiber optic cable shall contain 12 fibers and shall be of continuous manufacture with no factory splices in the fiber.

2.3.2.1 Compatible Components

Materials used within a given cable shall be compatible with all other materials used in the same cable when such materials come into intimate contact. All cable components used shall have no adverse affect on optical transmission or on the mechanical integrity characteristics of the fiber placed in the cable. All materials used shall be nontoxic, noncorrosive, and shall present no dermal hazard. The minimum required material components applied to fiber optic cable construction are central core or sheath strength member, color-coded optical fibers, inner jacket, pulling strength members, and outer jacket.

2.3.2.2 Cable Cores

A central core member shall be included to serve as a cable core foundation to reduce strain on the fibers but not to serve as a pulling strength member. The material of the central core member shall be nonmetallic. The sheath strength member may be either metallic or nonmetallic. The metallic strength element shall be spring quality music type wire per ASTM A 228. The nonmetallic strength element shall be glass filament.

2.3.2.3 Optical Fiber

Multi-mode optical fibers shall be 24 strand and contained in the cable. The single-mode fiber shall be step index optical glass. The core diameter, if an addressable parameter, shall be 8.5 plus or minus 2 microns. If the core diameter is not addressed, then the mode field diameter shall be 10 microns plus or minus 1 micron. The cladding diameter shall be 125 microns plus or minus 5 microns. The core-cladding offset shall be less than 1 micron. The minimum tensile strength of the fiber after primary protective coating shall be greater than 344 MPa (50,000 psi). The softening point of the clad material of the optical fiber shall be 1630 degrees C plus or minus 50 degrees C in compliance with ASTM C 338.

2.3.2.4 Optical Fiber Coatings

The optical fiber shall be coated with a suitable material to preserve the intrinsic high tensile strength of the glass fiber. The outside diameter of the coated optical fiber shall be 250 microns plus or minus 15 microns. The

coating material shall be readily removable, mechanically or chemically, without damaging the optical fibers when the removal is desired.

2.3.2.5 Color Coding

The primary protective coated fiber shall be coated with a color-code coating for individual fiber identification. The maximum outside diameter of color-code coated fiber shall be less than 300 microns.

2.3.2.6 Fiber Protection

The color-code coated fibers shall be surrounded with either loose buffer tubes, channels or other innovative design, or in a tight buffer construction, for protection from external mechanical and environmental influences. The interior of the tube shall be filled with a suitable gel-filling compound to prevent water migration. The loose tube buffering, channel or other innovative design, or tight buffer construction, shall be color coded for the tube identification. The material of the buffering tube shall be PVC, mylar, nylon, or a functionally equivalent material.

2.3.2.7 Tint Requirements

The color concentrates or tints used to color the optical fibers and the buffer tubes shall not be susceptible to migration and chemical reaction with gel-filling compound.

2.3.2.8 Buffer Tubes

The buffer tubes shall be located concentrically around the cable central core member and covered with a black, low or medium density polyethylene inner jacket in accordance with ICEA S-56-434.

2.3.2.9 Filling Compound Requirements

The inner jacket interior and buffer cavity shall contain a gel-type filling compound. The filling compound shall be of suitable viscosity so that it shall protect the optical fibers against the ingress of water and/or soluble chemicals and shall not flow at the temperature of up to 65 degrees C. The gel-filling compound shall be colorless, electrically nonconducting, inert gel-type, waterproof, nontoxic, with no dermal hazards, and compatible chemically and mechanically with all cable components and associated splice hardware materials to which it may make contact. The gel filling shall be removable, as required, using commercially available products under field conditions.

2.3.2.10 Tensil Strength

The cable shall contain a nonconductive central strength member as a well as a layer of aramid type yarn encircling the cable core. The strength member shall provide a maximum pulling load of 1335 Newtons.

2.3.2.11 Outer Jacket

Black, low or medium density, high-molecular weight, polyethylene materials shall be applied longitudinally over all the inner jacket and sheathing strength member to form the cable outer jacket, in accordance with ICEA S-56-434. The outer jacket shall be smooth, concentric, non-nutrient to

fungus, and free from holes, splits, blisters, or other imperfections. The overall outside cable diameter shall not exceed 19.1 mm (0.75 inch).

2.3.2.12 Fiber Differentiation

The individual optical fiber shall be easily and positively identified from the buffer tube color code and the optical fiber primary coating color code.

2.3.2.13 Cable Labeling

The outer jacket shall bear the manufacturer's name, year of manufacture, and length marker. The length marking shall employ continuous four- or five-digit number in meters, such as:

Manufacturer's Name - Year
XXXX meter

The markings shall be repeated clearly and distinguishably, on every meter on the cable outer jacket. The marking ink shall be fully compatible with the jacket material, nonsmearing, nonwater soluble, abrasion resistant, and durable enough to withstand field handling during placement and subsequent operations.

2.3.2.14 Attenuation

The optical attenuation of each optical fiber in the reeled cable shall be no greater than 1.0 dB/km within a peak emissive region of 850 to 1300 nm. The attenuation shall be measured on completed cable reel length, and normalized linearly to 1 km. The measurement method shall be in accordance with EIA ANSI/EIA/TIA-455-46A or EIA ANSI/EIA/TIA-455-53A.

2.3.2.15 Bandwidth

Each optic fiber within the cable (reeled) shall have its bandwidth measured between 3 dB optical power points, as compared to a reference signal, for a light source with a peak optical emissive region of 850 to 1300 nm. The effective system bandwidth of at least 1 GHz-km is required. The effective system bandwidth is the bandwidth length product calculated from the measured bandwidth multiplied by the cable length raised to the negative length dependance factor (or gamma factor). Gamma shall be in the range of 0.85 to 0.9. The bandwidth measurement shall be in accordance with EIA ANSI/EIA/TIA-455-30B frequency domain or EIA ANSI/EIA/TIA-455-51A time domain.

2.3.2.16 Numerical Aperture

The numerical aperture of each optical fiber shall be 0.2 plus or minus 0.02 within an optical emissive region of 850 to 1300 nm. The method of numerical aperture measurement shall be in accordance with EIA ANSI/EIA/TIA-455-47B.

2.3.2.17 Bending Tolerance

The cable shall be able to withstand bending to a minimum radius of ten times the cable outer diameter with no tensile load applied, and of twenty times the cable outer diameter with maximum tensile load applied during

installation, without damage to cable components or degradation of the optical fiber performance at room temperature.

2.3.2.18 Tensile Load Tolerance

The fiber optic cable shall withstand a pull force of at least 1780 Newtons, to be applied to the pulling strength member during the installation and a tensile load of at least 300 Newtons during operation without incurring any damage or detriment to fiber optic cable and optical performance. The tensile strength test shall be per EIA ANSI/EIA-455-33A.

2.3.2.19 Cyclic Flexing Tolerance

The fiber optic cable shall withstand at least twenty bending cycles at minimum bend radius without damage to the fiber optic cable components or degrading optical performance. The cyclic flexing test shall be in accordance with EIA ANSI/EIA-455-65.

2.3.2.20 Crush Resistance

The minimum crush resistance of the fiber optical cable shall be greater than 650 Newton/cm without damage to cable components or degrading optical performance. The crush resistance test shall be in accordance with EIA ANSI/TIA/EIA-455-41A.

2.3.2.21 Impact Resistance

The fiber optic cable shall be capable of withstanding twenty impacts, at a force of 5 Newtons-meters, without damage to cable components, or degradation of optical performance. The impact resistance test shall be in accordance with EIA ANSI/EIA/TIA-455-25B.

2.3.2.22 Gel Compound Temperature Tolerance

The optic cable shall be tested for the ability of the gel-filling compound in the interior of the inner jacket and buffer to resist flow at the temperature range of minus 40 degrees C to 60 degrees C in accordance with EIA ANSI/EIA-455-81A.

2.3.2.23 Fluid Penetration Test

The optic cable shall be capable of preventing the entry and axial migration of 62 kPa (9 psi) pressurized water when subjected to fluid penetration testing in accordance with EIA ANSI/EIA/TIA-455-82B.

2.3.2.24 Performance Requirements

The fiber optic cable shall comply with the mechanical performance requirements herein while used in duct applications where the temperature varies minus 20 degrees C to plus 60 degrees C. Optical performance degradation shall be less than 5 percent of the optical performance requirements in the temperature range of minus 20 degrees C to plus 60 degrees C. The fiber optic cable shall not be damaged in storage where the temperature may vary from minus 40 degrees C to plus 65 degrees C.

2.3.2.25 Defects and Imperfections

Fiber optic cables shall be free of material and manufacturing defects, and of dimensional nonuniformities which would seriously impair the functionality of the cables. The fiber optic cables shall also be free from surface imperfections and internal defects which would prevent them from meeting the mechanical and transmission requirements of this specification.

2.4 CONDUIT

Conduit as specified in Section 16415 ELECTRICAL WORK, INTERIOR and Section 16375 ELECTRICAL DISTRIBUTION SYSTEM, UNDERGROUND and as shown shall be furnished.

2.5 INNERDUCT

Innerduct shall be SIDR 11.5 polyethylene plastic pipe conforming to ASTM D 2239.

2.6 CLOSURES

2.6.1 Copper Conductor Closures

2.6.1.1 Underground

The underground closure shall be suitable to house a straight, butt, and branch splice in a protective housing into which can be poured an encapsulating compound. The closure shall be of suitable thermoplastic, thermoset, or stainless steel material supplying structural strength necessary to pass the mechanical and electrical requirements in a vault or manhole environment. The encapsulating compound shall be reenterable and shall not alter the chemical stability of the closure. Filled splice cases shall comply with REA PE-74.

2.6.2 Fiber Optic Closures

2.6.2.1 Underground

The underground closure shall be suitable to house a splicer organizer in a protective housing into which can be poured an encapsulating compound. The closure shall be of suitable thermoplastic, thermoset, or stainless steel material supplying structural strength necessary to pass the mechanical and electrical requirements in a vault or manhole environment. The encapsulating compound shall be reenterable and shall not alter the chemical stability of the closure.

2.7 CABLE SPLICES, CONNECTORS, CABLE ASSEMBLIES, AND ORGANIZERS

2.7.1 Copper Cable Splices

Fiber optic cable shall be installed in one continuous run from the Communication Room in the CCTT to the fiber optic patch panel in the Building #4073, no splices will be allowed.

2.8 MISCELLANEOUS ITEMS

2.8.1 Shield Connectors

Shield connectors shall make a stable, low-impedance electrical connection between the shield of the communications cable and a conductor such as a strap, bar, or wire. The connector shall be made of tin-plated tempered brass. Shield bond connectors shall comply with REA PE-33.

2.8.2 Grounding Braid

Grounding braid shall provide low electrical impedance connections for dependable shield bonding. The braid shall be made from flat tin-plated copper.

PART 3 EXECUTION

3.1 INSTALLATION

All system components and appurtenances shall be installed in accordance with the manufacturer's instructions and as shown. All necessary interconnections, services, and adjustments required for a complete and operable telephone system shall be provided. All installation work must be done in accordance with the safety requirements set forth in the general requirements of IEEE C2 and NFPA 70.

3.1.1 Innerduct

Innerduct shall be pulled through existing duct-manhole system in continuous sections. Splices, joints, couplings, or connections of any type will not be allowed between manholes. Innerduct shall be sealed with polyurethane foam duct seal. This material shall be inserted between the innerduct and the duct. In those innerducts in which cables are placed this material shall also be inserted between the cable and the innerduct. Only one cable shall be installed in a given innerduct. Existing and new unoccupied innerducts shall be trimmed leaving 50 mm exposed.

3.1.2 Surge Protection

All cables and conductors, except fiber optic cable, which serve as communication lines through off-premise lines, shall have surge protection installed at each end which meet the requirements of REA PE-60.

3.2 SPLICING

3.2.1 Copper Conductor Splices

Copper conductor cable splicing shall be accomplished in accordance with REA PC-2.

3.2.2 Fiber Optic Splices

Fiber optic splicing shall be in accordance with the manufacturer's recommendation and shall exhibit an insertion loss not greater than 0.2 dB for fusion splices.

3.3 GROUNDING

Except where specifically indicated otherwise, all exposed noncurrent carrying metallic parts of telephone equipment, cable sheaths, cable splices, and terminals shall be grounded.

3.3.1 Incoming Outside Plant Cables

3.3.1.1 Cable Entrance Ground Bar

The Contractor shall provide a Cable Entrance Ground Bar (CEGB) to which all incoming outside plant cable shields shall be bonded directly. The CEGB shall be a copper ground bar provided for the purpose of terminating incoming telephone cable shields on a common connector point. The CEGB shall be connected to the MGB by the most direct route utilizing a copper wire conductor with a total resistance of less than 0.01 ohms.

3.3.1.2 Shields

The shields of all incoming cables shall not be bonded across the splice to the cable stubs. The shields of the incoming cables shall be grounded in the vault.

3.3.2 Main Distribution Frame Grounding

3.3.2.1 Protection Assemblies

The MDF protector assemblies shall be mounted directly on the vertical frame ironwork. The assemblies mounted on each vertical frame shall be connected with a No. 6 AWG copper conductor to provide a low resistance path to the MDFB.

3.3.2.2 MGB Connection

The MDFB shall be connected to the MGB by a copper wire conductor with a total resistance of less than 0.01 total ohms.

3.3.3 Manholes

The shields of all cables in each manhole shall be bonded together by a bonding wire or ribbon. At intermediate manholes where the cable is pulled through without a sheath opening, bonds are not required. If the manhole has a lacerating bonding ribbon, the shields of cable shall be attached to it.

3.4 ACCEPTANCE TESTS

The Contractor shall provide all personnel, equipment, instrumentation, and supplies necessary to perform all required testing. Notification of any planned testing shall be given to the Contracting Officer at least 14 days prior to any test, and in no case shall notice be given until after the Contractor has received written Contracting Officer approval of the test plans as specified. The test plans shall define all the tests required to ensure that the system meets technical, operational, and performance specifications. The test plans shall define milestones for the tests, equipment, personnel, facilities, and supplies required. The test plans shall identify the capabilities and functions to be tested.

3.4.1 Copper Conductor Cable

The following acceptance tests shall be performed in accordance with REA PC-4:

a. Shield continuity.

b. Conductor continuity.

c. Conductor insulation resistance.

d. Structural return loss.

e. Cable insertion loss and loss margin at carrier frequencies.

f. Shield ground for single jacketed cables.

g. DC loop resistance.

3.4.2 Fiber Optic Cable

Three optical tests shall be performed: Optical Time Domain Reflectometry (OTDR) Test, Attenuation Test, and Bandwidth Test. These tests shall be performed on the completed end-to-end spans which include the near-end pre-connectorized single-fiber cable assembly, outside plant as specified, and the far-end pre-connectorized single-fiber cable assembly. The following acceptance tests shall be performed for each fiber in the completed cable length. Single-mode fibers do not require Bandwidth Test.

3.4.2.1 OTDR Test

The OTDR test shall be used to determine the adequacy of the cable installations. The OTDR tests will show any irregularities, such as discontinuities, micro-bendings, improper splices, for the cable span under test. Hardcopy fiber signature records shall be obtained from the OTDR for each fiber in each span and shall be included in the test results. The OTDR test shall be measured in both directions. A reference length of fiber, 1 km minimum, used as the delay line shall be placed before the new end connector and after the far end patch panel connectors for inspection of connector signature.

3.4.2.2 Attenuation Test

End-to-end attenuation measurements shall be made on all fibers, in both directions, using a 850 1300 nanometer light source at one end and the optical power meter on the other end. These tests will be used to verify that the cable system attenuation requirements are met. The measurement method shall be in accordance with EIA ANSI/EIA/TIA-455-53A.

3.4.2.3 Bandwidth Test

The end-to-end bandwidth of all multimode fiber span links shall be measured by the frequency domain method. The bandwidth shall be measured in both directions on all fibers. The bandwidth measurements shall be in accordance with EIA ANSI/EIA/TIA-455-30B.

End of Section

SECTION 16721

FIRE DETECTION AND ALARM SYSTEM
11/91

PART 1 GENERAL

1.1 REFERENCES

The publications listed below form a part of this specification to the extent referenced. The publications are referred to in the text by basic designation only.

AMERICAN NATIONAL STANDARDS INSTITUTE (ANSI)

ANSI C135.30	(1988) Zinc-Coated Ferrous Ground Rods for Overhead or Underground Line Construction

FACTORY MUTUAL ENGINEERING AND RESEARCH (FM)

FM P7825	(1994; Supple 1) Approval Guide

INSTITUTE OF ELECTRICAL AND ELECTRONICS ENGINEERS (IEEE)

IEEE C62.41	(1991) Surge Voltages in Low-Voltage AC Power Circuits

NATIONAL FIRE PROTECTION ASSOCIATION (NFPA)

NFPA 70	(1996) National Electrical Code
NFPA 72	(1996) National Fire Alarm Code
NFPA 75	(1995) Standard for the Protection of Electronic Computer/Data Processing Equipment
NFPA 90A	(1996) Installation of Air Conditioning and Ventilating Systems

UNDERWRITERS LABORATORIES (UL)

UL-04	(1998) Fire Protection Equipment Directory
UL 6	(1993) Rigid Metal Conduit
UL 38	(1994; Rev Jan 1994) Manually Actuated Signaling Boxes for Use with Fire-Protective Signaling Systems
UL 228	(1993) Door Closers-Holders, with or without Integral Smoke Detectors
UL 268	(1989; Rev May 1989) Smoke Detectors for Fire Protective Signaling Systems

UL 464	(1990) Audible Signal Appliances
UL 467	(1993) Grounding and Bonding Equipment
UL 521	(1993) Heat Detectors for Fire Protective Signaling Systems
UL 797	(1993) Electrical Metallic Tubing
UL 864	(1991; Rev thru May 1994) Control Units for Fire-Protective Signaling Systems
UL 1242	(1983; Rev thru Jul 1993) Intermediate Metal Conduit

1.2 GENERAL REQUIREMENTS

1.2.1 Standard Products

Material and equipment shall be the standard products of a manufacturer regularly engaged in the manufacture of the products and shall be items that have been in satisfactory use for at least 2 years prior to bid opening. Equipment shall be supported by a service organization that can provide service within 24 hours.

1.2.2 Nameplates

Major components of equipment shall have the manufacturer's name, address, type or style, voltage and current rating, and catalog number on a noncorrosive and nonheat-sensitive plate which is securely attached to the equipment.

1.2.3 Keys and Locks

Locks shall be keyed alike.

1.2.4 Tags

Tags with stamped identification number shall be furnished for keys and locks.

1.2.5 Verification of Dimensions

The Contractor shall become familiar with all details of the work, verify all dimensions in the field, and shall advise the Contracting Officer of any discrepancy before performing the work.

1.2.6 Compliance

The fire detection and internal alarm system and the central reporting system shall be configured in accordance with NFPA 72. The equipment furnished shall be compatible and be UL listed or FM approved or approved or listed by a nationally recognized testing laboratory in accordance with the applicable NFPA standards.

1.2.7 Manufacturer's Services

Services of a manufacturer's representative who is experienced in the installation, adjustment, testing, and operation of the equipment specified shall be provided. The representative shall supervise the installation, adjustment, and testing of the equipment.

1.3 SYSTEM DESIGN

1.3.1 Operation

The fire alarm and detection system shall be a complete, addressable, supervised fire alarm system. The system shall be activated into the alarm mode by actuation of any alarm initiating device. The system shall remain in the alarm mode until initiating device is reset and the fire alarm control panel is reset and restored to normal. Alarm initiating devices shall be connected to initiating device circuits (IDC), Style D, or to signal line circuits (SLC), Style 6, in accordance with NFPA 72. Alarm indicating appliances shall be connected to indicating appliance circuits (IAC), Style Z in accordance with NFPA 72. A two-loop conduit system shall be provided so that if any one conduit and all conductors contained in that conduit are severed all IDC, IAC, or SLC on that circuit shall remain functional. A two-loop system is not applicable to the central fire alarm communication center from the local panels. All textual, audible, and visual appliances and systems shall comply with NFPA 72 and Americans with Disabilities Act (ADA)Guidelines.

Addressable system shall be microcomputer (microprocessor or microcontroller) based with a minimum word size of eight bits.

a. Sufficient memory shall be provided to perform as specified and as shown for addressable system.

b. Individual identity of each addressable device shall be provided for the following conditions:

   alarm
   trouble
   open
   short
   appliances missing/failed
   remote detector - sensitivity adjustment from the panel for smoke detectors

c. All addressable devices shall have the capability of individually being disabled or enabled from the panel.

1.3.2 Operational Features

The system shall have the following operating features:

a. Electrical supervision of alarm IDC,SLC and IAC. Smoke detectors shall have combined alarm initiating and power circuits.

b. Electrical supervision of the primary power (ac) supply, battery voltage, placement of alarm zone module (card, PC board) within the control panel, and transmitter tripping circuit integrity.

c. Trouble buzzer and trouble lamp (light emitting diode or neon light) to activate upon a single break, open, or ground fault condition which prevents the required normal operation of the system. The trouble signal shall also operate upon loss of primary power (ac) supply, low battery voltage, removal of alarm zone module (card, PC board), and disconnection of the circuit used for transmitting alarm signals off-premises. A trouble alarm silence switch shall be provided which will silence the trouble buzzer, but will not extinguish the trouble indicator lamp. After the system returns to normal operating conditions, the trouble buzzer shall again sound until the silencing switch returns to normal position, unless automatic trouble reset is provided.

d. Transmitter disconnect switch to allow testing and maintenance of the system without activating the transmitter but shall provide a trouble signal when disconnected and a restoration signal when reconnected.

e. Evacuation alarm silencing switch or switches which, when activated, will silence alarm devices, but will not affect the zone indicating lamp nor the operation of the transmitter. This switch shall be over-ridden upon activation of a subsequent alarm from an unalarmed zone and the alarm devices will be activated.

f. Electrical supervision of circuits used for supervisory signal services. Supervision shall detect any open, short, or ground.

g. Confirmation or verification modules used on smoke detection initiating circuits. The modules shall interrupt the transmission of an alarm signal to the system control panel for a factory set period. This interruption period shall be adjustable from 1 to 60 seconds and be factory set at 20 seconds. Immediately following the interruption period, a confirmation period shall be in effect during which time an alarm signal if present will be sent immediately to the control panel. All fire alarm devices other than smoke detectors shall be prohibited on circuits controlled by confirmation or verification modules.

h. Zones for alarm IDC SLC shall be arranged as indicated on the contract drawings.

1.3.3 Alarm Functions

An alarm condition on a circuit shall automatically initiate the following functions:

a. Transmission of signals over the station radio fire reporting system. The signals shall be as shown.

b. Visual indications of the alarmed zones on the fire alarm control panel annunciator and on the remote annunciator.

c. Continuous sounding of alarm notification appliances throughout the building.

d. Closure of doors held open by electromagnetic devices.

e. Shutdown of power to the data processing equipment in the alarmed zones.

1.3.4 Primary Power

Operating power shall be provided as required by paragraph Power Supply for the System. Transfer from normal to emergency power or restoration from emergency to normal power shall be fully automatic and not cause transmission of a false alarm. Loss of ac power shall not prevent transmission of a signal via the fire reporting system upon operation of any initiating circuit.

1.3.5 Battery Backup Power

Battery backup power shall be through use of rechargeable, sealed-type storage batteries and battery charger.

1.4 SUBMITTALS

Government approval is required for submittals with a "GA" designation; submittals having an "FI0" designation are for information only. The following shall be submitted in accordance with Section 01300 SUBMITTAL PROCEDURES:

SD-01 Data

Battery; GA.

Substantiating battery calculations for supervisory and alarm power requirements. Ampere-hour requirements for each system component and each panel component, and the battery recharging period shall be included.

Voltage Drop;GA.

Voltage drop calculations for signaling appliance circuits to indicate that sufficient voltage is available for proper appliance operation.

Spare Parts; GA.

Spare parts data for each different item of material and equipment specified, not later than 2 months prior to the date of beneficial occupancy. Data shall include a complete list of parts and supplies with the current unit prices and source of supply and a list of the parts recommended by the manufacturer to be replaced after 3 year of service.

Qualifications; GA.

Qualifications, with verification of experience and license number, of a Registered Professional Engineer with at least 4 years of current experience in the design of the fire protection and detection systems. This engineer must perform the various specification items required by this section to be performed by a registered Professional Engineer.

SD-04 Drawings

Fire Alarm Reporting System; GA.

Detail drawings, signed by the Registered Professional Engineer, consisting of a complete list of equipment and material, including manufacturer's descriptive and technical literature, catalog cuts, and installation instructions. Note that the contract drawings show layouts based on typical detectors. The contractor shall check the layout based on the actual detectors to be installed and make any necessary revisions in the detail drawings. The detail drawings shall also contain complete wiring and schematic diagrams for the equipment furnished, equipment layout, and any other details required to demonstrate that the system has been coordinated and will properly function as a unit.

Detailed point-to-point wiring diagram, signed by the Registered Professional Engineer, showing all points of connection. Diagram shall include connections between system devices, appliances, control panels, supervised devices, and all equipment that is activated or controlled by the panel. Point to point conduit runs with schedules of circuits and devices shall be included.

SD-06 Instructions

Fire Alarm Reporting System; GA.

Six copies of operating instructions outlining step-by-step procedures required for system startup, operation, and shutdown. The instructions shall include the manufacturer's name, model number, service manual, parts list, and brief description of all equipment and their basic operating features. Six copies of maintenance instructions listing routine maintenance procedures, possible breakdowns and repairs, and troubleshooting guide. The instructions shall include conduit layout, equipment layout and simplified wiring, and control diagrams of the system as installed. Instructions shall be approved prior to training.

Training; GA.

Lesson plans and training data, in manual format, for the training courses.

SD-08 Statements

Test Procedures; GA.

Detailed test procedures, signed by the Registered Professional Engineer, for the fire detection and alarm system 60 days prior to performing system tests.

SD-09 Reports

Testing; GA.

Test reports in booklet form showing all field tests performed to prove compliance with the specified performance criteria, upon completion and testing of the installed system. Each test report shall document all readings, test results and indicate the final position of controls.

SD-13 Certificates

Equipment; GA.

Certified copies of current approvals or listings issued by UL, FM or other nationally recognized testing laboratory, showing compliance with specified NFPA standards.

Installer; GA.

The Contractor shall provide documentation demonstrating that its fire detection and alarm system installer has been regularly engaged in the installation of fire detection and alarm systems meeting NFPA standards for a minimum of three years immediately preceding commencement of this contract. Such documentation shall specifically include proof of satisfactory performance on at least three projects similar to that required by these specifications, including the names and telephone numbers of using agency points of contact for each of these projects. Documentation shall indicate the type of each system installed and include a written certificate that each system has performed satisfactorily in the manner specified for a period of not less than 12 months following completion. All such data shall be submitted 30 days prior to commencement of installation for approval of the Contracting Officer. Listing of the installer under "Protective Signaling Services - Local, Auxiliary, Remote Station Proprietary (UUJS)" of UL-04 shall be accepted as equivalent proof of compliance with the foregoing experience requirements.

1.5 DELIVERY AND STORAGE

All equipment delivered and placed in storage shall be stored with protection from the weather, humidity and temperature variation, dirt and dust, and any other contaminants.

PART 2 PRODUCTS

2.1 CONTROL PANEL

Control panel shall be of the addressable type, UL listed for releasing service. Control Panel shall comply with all the applicable requirements of UL 864. Panel shall be modular, installed in a surfacemounted steel cabinet with hinged door and cylinder lock. Control panel shall be a clean, uncluttered, and orderly assembled panel containing all components and equipment required to provide the specified operating and supervisory functions of the system. The panel shall have prominent rigid plastic, phenolic or metal identification plates for all lamps, zones, controls, meters, fuses, and switches. Nameplates for fuses shall also include ampere rating. Separate alarm and trouble lamp shall be provided for each zone alarm located on exterior of cabinet door or be visible through the cabinet door. Control panel switches shall be within the locked cabinet. A suitable means shall be provided for testing the control panel visual indicating devices (meters or lamps). Meters and lamps shall be plainly visible when the cabinet door is closed. Signals shall be provided to indicate by zone any alarm, supervisory or trouble condition on the system. Each SLC initiating circuit shall be powered and supervised so that a signal on one zone does not prevent the receipt of signals from other zones. Loss of power, including any or all batteries, shall not require the reloading of a program. Upon restoration of power, startup shall be automatic, and shall not require any manual operation. The loss of primary power or the sequence of applying primary or emergency power shall not affect the transmission of alarm, supervisory or trouble signals.

2.1.1 Visual Annunciators

Visual annunciators shall be provided for each active zone and spare zone. Spare zones shall be provided as shown on the drawing. Each lamp shall provide specific identification of the zone by means of a permanently attached rigid plastic, phenolic or metal sign with either raised or engraved letters. Zone identification shall consist of word description of the zone.

2.1.2 Cabinets

Cabinets shall be provided with ample gutter space to allow proper clearance between the cabinet and live parts of the panel equipment. If more than one modular unit is required to form a control panel, the units shall be installed in a single cabinet large enough to accommodate all units. Cabinets shall have manufacturer's standard finish and color.

2.1.3 Circuit Connections

Circuit conductors entering or leaving the panel shall be connected to screw-type terminals with each terminal marked for identification.

2.2 STORAGE BATTERIES

Storage Batteries shall be provided and shall be the sealed, lead-calcium type requiring no additional water. The batteries shall have ample capacity, with primary power disconnected, to operate the fire alarm system for a period of 48 hours. Following this period of operation via batteries, the batteries shall have ample capacity to operate all components of the system, including all alarm signaling devices in the total alarm mode for a minimum period of 30 minutes. Batteries shall be sized to deliver 50 percent more ampere/hours based on a 48 hour discharged rate than required for the calculated capacities. Battery cabinet shall be a separate cabinet. Battery shall be provided with overcurrent protection in accordance with NFPA 72.

2.3 BATTERY CHARGER

Battery charger shall be completely automatic, with high/low charging rate, capable of restoring the batteries from full discharge to full charge within 24 hours. A separate ammeter shall be provided for indicating rate of charge. A separate voltmeter shall be provided to indicate the state of the battery charge. A pilot light indicating when batteries are manually placed on a high rate of charge shall be provided as part of the unit assembly if a high rate switch is provided. Charger shall be located in control panel or battery cabinet.

2.4 MANUAL FIRE ALARM STATIONS

Manual fire alarm stations shall conform to the applicable requirements of UL 38. Manual stations shall be connected into alarm-initiating circuits. Stations shall be installed onsemi-flush mounted outlet boxes. Stations shall be double action type. Stations shall be finished in red, with raised letter operating instructions of contrasting color. Stations requiring the breaking of glass or plastic panels for operation are not acceptable. Stations employing glass rods are not acceptable. The use of a

key or wrench shall be required to reset the station. Gravity or mercury switches are not acceptable. Switches and contacts shall be rated for the voltage and current upon which they operate. Stations shall have a separate screw terminal for each conductor. Surface mounted boxes shall be painted the same color as the fire alarm manual stations. Addressable pull stations shall be capable of being field programmed, shall latch upon operation and remain latched until manually reset.

2.5 FIRE DETECTING DEVICES

Fire detecting devices shall comply with the applicable requirements of NFPA 72, NFPA 90A, UL 268, and UL 521. The detectors shall be provided as indicated. Detector base shall have screw terminals for making connections. No solder connections will be allowed. Detectors shall be connected into alarm initiating circuits. Detectors located in concealed locations (above ceiling, etc.) shall have a remote visible indicator lamp. Installed devices shall conform to the classification of the area. Addressable fire detecting devices except flame detectors shall be dynamically supervised and uniquely identified in the control panel.

2.5.1 Heat Detectors

Heat detectors shall be designed for detection of fire by combination fixed temperature and rate-of-rise principle. Heat detectors shall be rated for a minimum of 50 foot spacing (smooth-ceiling rated) in accordance with UL 521. Detectors located in areas subject to moisture, exterior atmospheric conditions or hazardous locations as defined by NFPA 70, shall be types approved for such locations.

2.5.1.1 Combination Fixed-Temperature and Rate-of-Rise Detectors

Detectors shall be designed for surface outlet box mounting and supported independently of wiring connections. Contacts shall be self-resetting after response to rate-of-rise principle. Under fixed temperature actuation, the detector shall have a permanent external indication which is readily visible. Detector units located in boiler rooms, showers, or other areas subject to abnormal temperature changes shall operate on fixed temperature principle only. Rating for fixed temperature portion shall be 135 degrees F in temperature conditioned spaces.

2.5.2 Smoke Detectors

Detectors shall be designed for detection of abnormal smoke densities. Smoke detectors shall be photoelectric type. Detectors shall contain a visible indicator lamp that shows when the unit is in alarm condition. Detectors shall not be adversely affected by vibration or pressure. Detectors shall be the plug-in type in which the detector base contains terminals for making all wiring connections.

2.5.2.1 Photoelectric Detectors

Detectors shall operate on a light scattering concept using an LED light source. Failure of the LED shall not cause an alarm condition. Detectors shall be factory set for sensitivity and shall require no field adjustments of any kind. Detectors shall have an obscuration rating between 1.9 and 2.4 percent per foot when tested in accordance with UL 268.

2.5.2.2 Duct Detectors

Duct detectors shall be addressable photoelectric smoke detectors in a housing specifically designed for mounting on ducts and shall be provided with perforated air sampling tubes, extending fully across the duct. Duct detectors shall be designed for the air flow and velocity appropriate for the duct in which they will be installed. Detectors shall operate on a light scattering concept using an LED light source. Failure of the LED shall not cause an alarm condition. Detectors shall be factory set for sensitivity and obscuration rating between 1.9 and 2.4 percent per foot when tested in accordance with UL 268. Duct detectors shall be provided with a remote mounted visual indicator LED, which shall be provided with an engraved plastic label for ease of location of alarms. ~~Duct detectors are provided under Section 15950 Heating, Ventilation, and Air Conditioning HVAC Control Systems.~~

2.6 NOTIFICATION APPLIANCES

Audible appliances shall be heavy duty and conform to the applicable requirements of UL 464. Devices shall be connected into alarm indicating circuits and shall have a separate screw terminal for each conductor. Devices shall be painted red or manufacturer's standard finish and color.

2.6.1 Visual Notification Appliances

Visual notification appliances shall have clear high intensity optic lens and flash tubes. Strobes shall flash at approximately 1 flash per second and a minimum of 75 candela. Strobe shall be semi-flush mounted. Units shall flash in synchronization with each other.

2.6.2 Combination Audible/Visual Notification Appliances

Combination audible/visual notification appliances shall provide the same requirements as individual units except they shall mount as a unit in standard backboxes. All units shall be factory assembled. . Units shall flash in synchronization with each other.

2.7 REMOTE ANNUNCIATION EQUIPMENT

2.7.1 Remote Graphic Annunciator

Graphic annunciator shall have a simplified plan view of the building, showing all walls and partitions. Each zone shall be indicated by an LED lamp shown in its relative position in the building. Two individual lamps shall be provided for each zone and shall illuminate for an abnormal condition in that zone. Lamps shall be red for alarm condition and amber for supervisory and trouble conditions. Plan view shall be approximately to scale and in no case smaller than 15 inches in length or width. Annunciator shall have a door with piano hinge and two point cylinder lock or two cylinder locks. Lock shall be operable using the same key as the control panel. Annunciator shall contain a lamp test switch, audible trouble signal and a trouble switch to silence the audible alarm, but not extinguish the trouble lamp. Annunciator shall be flush mounted.

2.8 Radio Fire Alarm Transmitter

Provide a 16 zone radio fire alarm transmitter of the same manufacturers of that currently installed on the base which are King-Fisher or Harlow. Transmitter shall be factory assembled and tested complete with manufacturer's locking cabinet, 60 hour rechargeable battery set, automatic battery charger, omni-directional antenna with mounting system, antenna surge arrestor, and coaxial cable. Installation shall be in strict accordance with the manufacturer's recommended practices, product listings or approvals, and NFPA 70, 72, and 1221. Ground transmitter and antenna to a driven ground rod and the facility electrical ground system. Mount transmitter adjacent to the fire alarm panel. Supply power to transmitter through a line voltage surge arrestor from the fire alarm circuit. Transmitter frequency and identity shall be as directed by the Contracting Officer. Program new transmitter identity code and zoning into the receiving consoles as directed by the Contracting Officer. Notwithstanding any other provisions of this contract, no other products will be accepted.

2.9 FIRE DETECTION AND ALARM SYSTEM PERIPHERAL EQUIPMENT

2.9.1 Ground Rods

Ground rods shall be of copper clad steel conforming to UL 467zinc-coated steel conforming to ANSI C135.30 not less than 3/4 inch in diameter by 10 feet in length.

2.9.2 Electromagnetic Door Hold-Open Devices

Devices shall be attached to the walls unless otherwise indicated. Devices shall comply with the appropriate requirements of UL 228. Devices shall operate on power from the fire alarm control panel facility power supply. Compatible magnetic component shall be attached to the door. Under normal conditions, the magnets shall attract and hold the doors open. When magnets are de-energized, they shall release the doors. Magnets shall have a holding force of approximately 25 pounds. Devices shall be UL or FM approved. Housing for device shall be brushed aluminum. Operation shall be fail safe with no moving parts.

2.9.3 Conduit

Conduit and fittings shall comply with UL 6, UL 1242 and UL 797.

2.9.4 Wiring

Wiring for 120V ac power shall be No. 12 AWG minimum. Wiring for low voltage dc circuits shall be No. 14 AWG minimum, THHN, solid copper. Power wiring (over 28 volts) and control wiring shall be isolated. All wiring shall conform to NFPA 70. System field wiring shall be solid copper and installed in metallic conduit or electrical metallic tubing. All conductors shall be color coded. Conductors used for the same functions shall be similarly color coded. Wiring code color shall remain uniform throughout the circuit. Pigtail or T-tap connections to alarm initiating, supervisory circuits, and alarm indicating circuits are prohibited. All wiring shall be UL listed.

2.9.5 Special Tools and Spare Parts

Special tools necessary for the maintenance of the equipment shall be furnished. Two spare fuses of each type and size required and five spare lamps and LED's of each type shall be furnished. Two percent of the total number of each different type of detector, but no less than two each, shall be furnished. Fuses and lamps shall be mounted in the fire alarm panel.

PART 3 EXECUTION

3.1 INSTALLATION

All work shall be installed as shown and in accordance with the manufacturer's diagrams and recommendations, unless otherwise specified. Smoke detectors shall not be installed until the building has been thoroughly cleaned.

3.1.1 Power Supply for the System

A single dedicated circuit connection for supplying power to each building fire alarm system shall be provided. The primary power shall be supplied as shown on the drawings. The power supply shall be equipped with a locking mechanism and marked "FIRE ALARM CIRCUIT CONTROL".

3.1.2 Wiring

Conduit size for wiring shall be in accordance with NFPA 70. Wiring for the fire alarm system shall not be installed in conduits, junction boxes, or outlet boxes with conductors of lighting and power systems. No more than one conductor shall be installed under any screw terminal. All circuit conductors entering or leaving any mounting box, outlet box enclosure or cabinet shall be connected to screw terminals with each terminal marked in accordance with the wiring diagram. Connections and splices shall be made using screw terminal blocks. The use of wire nut type connectors are prohibited in the system. Wiring within any control equipment shall be readily accessible without removing any component parts. The fire alarm equipment manufacturer's representative shall be present for the connection of wiring to the control panel.

3.1.3 Control Panel

The control panel and its assorted components shall be mounted so that no part of the enclosing cabinet is less than 12 inches nor more than 78 inches above the finished floor. All manually operable controls shall be between 36 inches to 42 inches above the finished floor. Panel shall be installed to comply with the requirements of UL 864.

3.1.4 Detectors

Detectors shall be installed in accordance with NFPA 72. Detectors shall be at least 12 inches from any part of any lighting fixture. Detectors shall be located at least 3 feet from diffusers of air handling systems. Each detector shall be provided with appropriate mounting hardware as required by its mounting location. Detectors which mount in free space shall be mounted directly to the end of the stubbed down rigid conduit drop. Conduit drops shall be firmly secured to minimize detector sway. Where length of conduit

drop from ceiling or wall surface exceeds 3 feet, sway bracing shall be provided.

3.1.5 Notification Appliances

Notification appliances shall be mounted a minimum of 8 feet above the finished floor unless limited by ceiling height or otherwise indicated.

3.1.6 Annunciator Equipment

Annunciator equipment provided shall be mounted where indicated.

3.2 OVERVOLTAGE AND SURGE PROTECTION

All equipment connected to alternating current circuits shall be protected from surges per IEEE C62.41 and NFPA 70. All cables and conductors which serve as communications links, except fiber optics, shall have surge protection circuits installed at each end. Fuses shall not be used for surge protection.

3.3 GROUNDING

Grounding shall be provided to building ground or ground rods shall be driven. Maximum impedance to ground shall be 25 ohms. Ground rods shall not protrude more than 6 inches above grade.

3.4 TESTING

The Contractor shall notify the Contracting Officer 30 days before the preliminary and acceptance tests are to be conducted. The tests shall be performed in accordance with the approved test procedures in the presence of the Contracting Officer. The control panel manufacturer's representative shall be present to supervise all tests. The Contractor shall furnish all instruments and personnel required for the tests.

3.4.1 Preliminary Tests

Upon completion of the installation, the system shall be subjected to functional and operational performance tests including tests of each installed initiating and notification appliance. Tests shall include the meggering of all system conductors to determine that the system is free from grounded, shorted, or open circuits. The megger test shall be conducted prior to the installation of fire alarm equipment. If deficiencies are found, corrections shall be made and the system shall be retested to assure that it is functional.

3.4.2 Acceptance Test

Testing shall be in accordance with NFPA 72. The recommended tests in NFPA 72 shall be considered mandatory and shall verify that all previous deficiencies have been corrected. The test shall include the following:

a. Test of each function of the control panel.

b. Test of each circuit in both trouble and normal modes.

c. Tests of alarm initiating devices in both normal and trouble conditions.

d. Tests of each control circuit and device.

e. Tests of each alarm notification appliance.

f. Tests of the battery charger and batteries.

g. Complete operational tests under emergency power supply.

h. Visual inspection of all wiring connections.

i. Opening the circuit at each alarm initiating device and notification appliance to test the wiring supervisory feature.

j. Ground fault

k. Short circuit faults

l. Stray voltage

m. Loop resistance

3.5 TRAINING

Training course shall be provided for the operations and maintenance staff. The course shall be conducted in the building where the system is installed or as designated by the Contracting Officer. The training period shall consist of 2 training days (8 hours per day) and shall start after the system is functionally completed but prior to final acceptance tests. The instructions shall cover all of the items contained in the operating and maintenance instructions.

END OF SECTION

SECTION 16726

INTRUSION DETECTION SYSTEM
04/98

PART 1 GENERAL

1.1 GENERAL REQUIREMENTS

The Contractor shall install an Intrusion Detection System (IDS) as indicated, interfaced to the central console at building No. 1015, Fort Lewis, Washington. The system shall be configured of proprietary components as specified, to interface with the existing Honeywell system. Contractor shall provide programming of the central console and associated panels for interface and operation. The IDS shall include all equipment, wiring, programming, and services necessary for an operational system.

1.1.1 System Description

The IDS shall consist of sensors wired in conduit to a local control panel, which in turn is wired to a hub panel. Hub panel shall communicate digitally over telephone wires to the central console, for alarm annunciation.

1.2 SUBMITTALS

Government approval is required for submittals with a "GA" designation; submittals having an "FIO" designation are for information only. The following shall be submitted in accordance with Section 01300 SUBMITTAL PROCEDURES:

SD-01 Data

Material and Equipment Lists; FIO.

A complete itemized listing of equipment and materials proposed for incorporation into the work. Each entry shall include an item number, the quantity of items proposed, and the name of the manufacturer of each such item.

Manufacturer's Catalog Data; FIO

Catalog cuts, brochures, circulars, specifications, product data, and printed information in sufficient detail and scope to verify compliance with the requirements of the contract documents.

SD-04 Drawings

Drawings, Intrusion Detection System; FIO

Detail drawings showing physical arrangement, mounting and construction details, wiring and connection diagrams, and terminal block assignments on telephone. Drawings shall be drawn to scale and/or dimensioned. All optional items shall be clearly identified as included or excluded.

As-Built Drawings; FIO

The as-built drawings shall be a record of the construction as installed. The drawings shall include all the information shown on the contract drawings as well as detail drawings developed by the Contractor and all deviations, modifications, and changes from the contract drawings, however minor.

SD-06 Instructions

Installation Procedures; FIO

As a minimum, installation procedures for sensors and panels. Procedures shall include diagrams, instructions, and precautions required to install, program, calibrate, and test the system.

SD-08 Statements

Test Plan; GA

A proposed test plan, 14 days prior to any testing. The test plan shall consist of complete predelivery and field test procedures including tests to be performed, test equipment required, and tolerance limits. Test procedures shall explain in detail, step-by-step actions and expected results demonstrating compliance with the requirements of the specification. No predelivery or field test shall be performed until the test plan is approved.

SD-09 Reports

Test Reports; GA

Six copies of the information described below:

a. A list of all equipment used, with calibration certifications.

b. A copy of all measurements taken.

c. The dates of testing.

d. The equipment and values to be verified.

e. The condition specified for the test.

f. The test results, signed and dated.

g. A description of all adjustments made.

SD-19 Operation and Maintenance Manuals

Operation and Maintenance Manuals; GA

Six copies of the manuals bound in hardback loose-leaf binders, shall be delivered to the Government within 30 days after completion of field tests. A draft copy shall be delivered to the Government prior to beginning of field test for use during testing. The draft copy shall be updated after field test with any changes made during installation, checkout, and acceptance. The manuals shall have a table of contents and tab sheets. The

manuals shall include software data and a description with information necessary to enable proper loading, testing, and operation.

1.3 INSTALLATION REQUIREMENTS

Security cables shall be installed in supporting structures provided under Section 16415 ELECTRICAL WORK, INTERIOR.

1.4 SEISMIC PROTECTION

Equipment, materials, and installation shall be in accordance with Section 13083 SEISMIC PROTECTION FOR ARCHITECTURAL, MECHANICAL, AND ELECTRICAL SYSTEMS AND EQUIPMENT (ZONE 3).

1.5 COORDINATION

The Contractor shall coordinate the installation and programming of the IDS equipment with the Directorate of Information Management (DOIM), Cliff Hawkeswood, 206-967-6789; and Law Enforcement Command (LEC), Master Sergeant Teasley, 206-967-4990.

PART 2 PRODUCTS

2.1 STANDARD PRODUCTS

Material and equipment shall be the standard product of a manufacturer regularly engaged in the manufacture of the product and shall essentially duplicate items that have been in satisfactory use for at least 2 years prior to bid opening.

2.1.1 Conductors

Conductors shall be annealed copper.

2.1.1.1 Low Voltage Cables

300 Volts, 80 degrees C, #18 AWG twisted pairs with overall PVC jacket.

2.1.2 Balanced Magnetic Switch

Twisted biased, 4.69 mm to 15.63 mm (3/16 inch to 5/8 inch) gap, 50 mm (1/2 inch) conduit hub, die cast housing, tamper protected, Sentrol No. 2807T.

2.1.3 Local Control Panel

System configured with keypad, power supply, battery, and 120 VAC input power transformer; Honeywell No. FS90 "L-Panel".

2.1.4 Hub Panel

System configured, data gathering, with power supply and battery, for L-panel connection to console; Honeywell No. FS90 Intelligent Panel.

PART 3 EXECUTION

3.1 GENERAL INSTLALTION REQUIREMENTS

Materials and equipment shall be installed in accordance with the manufacturer's published instructions and as shown. The installation shall complete with the requirements and recommendations of NFPA 70.

3.2 EQUIPMENT INSTALLATION

Equipment shall be installed within the protected area and interconnected with conduit and wiring.

3.2.1 Motion Detectors

Two detectors shall be installed in each protected area. Detectors shall be located on facing walls perpendicular to the entrance, at 2400 mm (8-foot) above finished floor, so intruder cuts beam at 90 degrees.

3.2.2 Local Control Panel

A local control panel shall be provided in each protected area. Locate adjacent to entrance door at 1200 mm (4-foot) above finished floor, so keypad is accessible. Provide dedicated branch circuit for power. For hub panel connection, provide 18.75 mm (3/4 inch) conduit with 2 pair conductors to telephone backboards and punch down on terminal blocks. Coordinate with DOIM for punch down locations, and jumper to outside plant cable.

3.2.3 Duress Alarm

A duress alarm shall be provided in each protected area. Locate adjacent to local control panel at 1200 mm (4 foot) above finished floor.

3.2.4 Hub Panel

The hub panel shall be located as indicated and provided with a dedicated branch circuit for power. Wiring shall be extended from the hub panel to the building distribution frame and punched down at terminal blocks, for connection to the local control panels and console. Coordinate with DOIM for punch down locations and jumper to outside plant cable.

3.2.5 Outside Plant Cable

Wiring between buildings with protected areas, buildings with hub panels, and the building with the console at LEC shall be provided under Section 16742 TELEPHONE SYSTEM, OUTSIDE PLANT. A dedicated pair of telephone wires shall be provided between each building with local control panels, and the building with the hub panel. These conductors shall be paralleled where necessary to keep the impedance below 80 ohms. Final connection to the LEC console via fiber optics, and remote line module (installed by others) will not be available until the final few days of contract.

3.3 PROGRAMMING

Contractor shall employ the services of the manufacturer to program the equipment. The Contractor shall coordinate with DOIM and LEC to obtain the

information required for programming; and the manufacturer's on site representative shall enter all data needed to make the system operational.

3.3.1 Hub Panel

Program for connection of local control panels.

3.3.2 Console

3.3.2.1 Program for connection of local control and hub panels.

3.3.2.2 Graphics

Create and program graphics for alarm annunciation of protected areas; including floor plans, alarm locations, sensor dynamics, and LEC instructions. Graphics shall have sufficient level of detail for the system operator to assess the alarm.

3.4 TESTING

The Contractor shall perform predelivery testing, field testing, and adjustment of the completed IDS. The Contractor shall provide all personnel, equipment, instrumentation, and supplies. Written notification shall be given to the Government at least 14 days prior to any test, and in no case shall notice be given until after the Contractor has received written approval of the specific test procedures. The Contractor shall perform all tests and inspections recommended by the manufacturer unless specifically waived by the Contracting Officer. The Contractor shall maintain a written record of all tests which includes data, test performed, personnel involved, devices tested, serial number and name of test equipment, and test results. All field test reports shall be signed and dated by the Contractor.

3.5 ACCEPTANCE

Final acceptance of the facility will not be given until the Contractor has successfully completed all tests and after all defects in installation, materials, or operation have been corrected.

End of Section

SECTION 16770

RADIO AND PUBLIC ADDRESS SYSTEMS
07/89

PART 1 GENERAL

1.1 REFERENCES

The publications listed below form a part of this specification to the extent referenced. The publications are referred to in the text by basic designation only.

ELECTRONIC INDUSTRIES ASSOCIATION (EIA)

EIA 310-D	(1992) Cabinets, Racks, Panels, and Associated Equipment

NATIONAL FIRE PROTECTION ASSOCIATION (NFPA)

NFPA 70	(1993) National Electrical Code

1.2 SYSTEM DESCRIPTION

The radio and public address system shall consist of an audio distribution network to include amplifiers, mixers, microphones, speakers, cabling, and any ancillary components required to meet the required system configuration and operation.

1.2.1 Multi-Channel System with Paging

The system shall include microphones, microphone outlet receptacles, two microphone inputs with preamplifiers, inputs for phonograph, magnetic tape, program sources, all channel paging, control for each input, power amplifying equipment, and accessories required to output the public address and paging audio signals through selected portions of the audio distribution network as indicated. The paging signal shall replace all channels of the radio system output, when the paging function is activated.

1.2.2 System Performance

The system shall provide even sound distribution throughout the designated area, plus or minus 3 dB for the 1-octave band centered at 4000 Hz. The system shall provide uniform frequency response throughout the designated area, plus or minus 3 dB as measured with 1/3-octave bands of pink noise at locations across the designated area selected by the Contracting Officer. The system shall be capable of delivering 75 dB average program level with additional 10 dB peaking margin sound pressure level (SPL) to any location in the area at an acoustic distortion level below 5 percent total harmonic distortion (THD). Unless otherwise specified the sound pressure reference level is 20 micro Pascal (0.00002 Newtons per square meter).

1.3 SUBMITTALS

Government approval is required for submittals with a "GA" designation; submittals having an "FIO" designation are for information only. The

following shall be submitted in accordance with Section 01300 SUBMITTAL PROCEDURES:

SD-01 Data

Spare Parts; FIO.

Spare parts data for each different item of material and equipment specified, after approval of the detail drawings and not later than 2 months prior to the date of beneficial occupancy. The data shall include a complete list of parts and supplies, with current unit prices and source of supply.

SD-04 Drawings

Radio and Public Address System; FIO.

Detail drawings consisting of a complete list of equipment and material, including manufacturer's descriptive and technical literature, performance charts and curves, catalog cuts, and installation instructions. Detail drawings shall also contain complete wiring and schematic diagrams and any other details required to demonstrate that the system has been coordinated and will properly function as a unit. Drawings shall show proposed layout of equipment and appurtenances, and equipment relationship to other parts of the work including clearances for maintenance and operation.

SD-09 Reports

Test Plan; FIO.

Test plan and test procedures for the acceptance tests. The test plan and test procedures shall explain in detail, step-by-step actions and expected results to demonstrate compliance with the requirements specified. The procedure shall also explain methods for simulating the necessary conditions of operation to demonstrate system performance.

Acceptance Tests; FIO.

Test reports in booklet form showing all field tests performed to adjust each component and to prove compliance with the specified performance criteria, upon completion and testing of the installed system. The reports shall include the manufacturer, model number, and serial number of test equipment used in each test. Each report shall indicate the final position of controls and operating mode of the system.

SD-19 Operation and Maintenance Manuals

Radio and Public Address System; FIO.

Six copies of the operation manual outlining the step-by-step procedures required for system start up, operation, and shutdown. The manual shall include equipment layout and schematics of simplified wiring and control diagrams of the system as installed, the manufacturer's name, model number, and brief description of all equipment and their basic operating features. Six copies of maintenance manual listing routine maintenance procedures, possible breakdowns and repairs, and troubleshooting guides. The manual

shall include equipment layout and schematics and simplified wiring and control diagrams of the system.

1.4 DELIVERY AND STORAGE

Equipment placed in storage until installation time shall be stored with protection from the weather, humidity and temperature variations, dirt and dust, and other contaminants.

1.5 VERIFICATION OF DIMENSIONS

The Contractor shall become familiar with the details of the work and working conditions, shall verify dimensions in the field, and shall advise the Contracting Officer of any discrepancies before performing the work.

PART 2 PRODUCTS

2.1 STANDARD PRODUCTS

Material and equipment to be provided shall be the standard products of a manufacturer regularly engaged in the manufacture of such products, and shall essentially duplicate material and equipment that have been in satisfactory use at least 2 years. All components used in the system shall be commercial designs that comply with the requirements specified. Equipment shall be supported by a service organization that is, in the opinion of the Contracting Officer, reasonably convenient to the site.

2.1.1 Identical Items

Items of the same classification shall be identical. This requirement includes equipment, modules, assemblies, parts, and components.

2.1.2 Nameplates

Each major component of equipment shall have the manufacturer's name, address, model and catalog number, and serial number on a plate secured to the equipment.

2.2 MIXER-PREAMPLIFIER

Mixer-preamplifier shall as a minimum conform to the following specifications:

Rated Output:	In-Wire System: 35 Watts RMS Building Wide System: 300 Watts RMS
Frequency Response:	Plus or Minus 2 dB, 60 - 13,000 Hz
Distortion:	Less than 1.0 percent, 60 - 13,000 Hz
Signal to noise:	Microphone - 60 dB Aux - 70 dB
Inputs:	2 Microphone (High-Impedance or Low-Impedance Unbalanced) 2 Auxiliary (High-Impedance)

Input Sensitivity:	Microphone	- 0.003 volts
	Aux	- 0.125 volts
	Magnetic Cartridge	- 0.0005 volts
Input Channel		
Isolation:	80 dB minimum	
Tone Controls:	Plus or Minus 10 dB range at 50 and 15,000 Hz	
Power Requirement:	110-125 Vac 60 Hz	

2.3 POWER AMPLIFIERS

Power amplifiers as a minimum conform to the following specifications:

Rated power output:	300 watts RMS
Frequency Response:	Plus or Minus 1 dB, 60-13,000 Hz
Distortion:	Less than 2 percent at RPO, 600-13,000 Hz
Input Impedance:	50 k ohm unbalanced
Output Impedance:	83.3, 10.4, 8.0, and 4.0 ohms
Output voltage:	70.7, 25, 22, and 15.5 volts
Power Requirement:	110-125 Vac 60 Hz

2.4 MICROPHONES

Microphones shall as a minimum conform to the following specifications:

Application:	In-Wall System:	Floor Stand
	Building-Wide System:	Desk
Element:	Dynamic	
Frequency Response:	50 - 12,000 Hz	
Impedance:	250 ohms (nominal)	
Front-to-back Ratio:	20 dB	

2.4.1 Microphone Jack

Each outlet for microphones shall consist of a standard outlet box, flush-mounted, and fitted with a three-pole, polarized, locking-type, female microphone jack and a corrosion resistant-steel device plate.

2.4.2 Microphone Stand

Each microphone shall have an associated stand which as a minimum shall consist of 863.6 mm (34 inch) by 1574.8 mm (62 inch) chrome tube assembly

with grip-action for locking control. Desk applications shall be as a minimum constructed of chrome tubing with a charcoal finish.

2.5 LOUDSPEAKERS

2.5.1 Cone Speaker

The cone speaker shall as a minimum conform to the following specifications:

Application:	Ceiling
Frequency range:	60 to 12,000 Hz
Power Rating:	Normal - 7 watts Peak - 10 watts
Voice Coil Impedance:	8 ohms
Line Matching Transformer Type:	25/70 volt line
Capacity:	2 watts
Magnet:	8 ounces or greater
Primary Taps:	0.5, 1, and 2 watts
Primary Impedance:	25 volts - 1250, 625, and 312 ohms 70 volts - 10k, 5k, and 2.5k ohms
Frequency Response:	30 - 20,000 Hz
Insertion Loss:	Less than 1 dB

2.5.2 Horn Speaker

The horn speaker shall as a minimum conform to the following specifications:

Application:	Indoor
Frequency Response:	400 - 14,000 Hz
Power Taps:	70 volt line - .9, 1.8, 3.8, 7.5, and 15 watts
Impedance:	5000, 2500, 1300, 670, 330, 90, and 45 ohms
Power Rating:	Normal - 7 watts Peak - 15 watts

2.5.3 Speaker Enclosures

Wall baffle or column speaker enclosures shall be of the "Top Hat" type enclosure and "T" bar bridges. For wall mounting applications, the wall baffle enclosure shall come equipped with a wall-mounting bracket designed to assure a rigid mounting to any flat surfaces. Horn speaker enclosures

shall have a 45 degree vertical dispersion and 120 degrees horizontal dispersion. The effective length of throw shall be a minimum of 60.

2.6 SPEAKER SWITCHING PANEL

Zone control shall be provided for the paging function. The speaker switching panel shall contain at least 50 double-pole, 3- position lever-type selector switches with mechanical detents and shall be rack-mounted. A designation strip shall be provided. Power supply shall be provided for priority relays and controls, rack-mounted and sized for a capacity equal to 200 percent of the as-built control system, and shall operate at 24 Vdc. Input and output shall be protected to permit Class 2 wiring in accordance with NFPA 70.

2.7 AM/FM EQUIPMENT

2.8 CASSETTE TAPE EQUIPMENT

The dual cassette tape play deck shall as a minimum conform to the following specifications:

Frequency Response:	Plus or minus 3 dB, 40 - 14,000 Hz
Wow and Flutter:	Less than 0.09 percent WRMS
Signal-to-Noise:	64 dB
Distortion:	1.3 percent
Play Head:	Hard Parmalloy
Operation:	Automatic Reverse
Power Requirements:	110-125 Vac, 60 Hz 48 Vdc

2.9 PRIORITY RELAYS AND CONTROLS

Priority relays and controls required to accomplish operations specified shall be provided. Relays shall be completely enclosed with a plastic dust cover for maximum protection against foreign matter, and shall be plug-in type. Relays shall be provided with a diode wired across the relay coil for transient suppression and shall be installed utilizing factory-prewired, rack-mounted receptacle strips. Coil shall be maximum 24 volts dc.

2.10 SWITCHES AND CONTROLS

2.10.1 Remote Loudspeaker Volume Controls

Remote volume controls shall be an auto transformer type with detented 3 dB steps and an OFF position. The controls shall be wall-mounted in single-gang outlet boxes and furnished with engraved switching plates finished to match approved finish of electrical wall switches. Insertion loss of the controls shall not exceed 0.6 dB and the power-handling capacities of the control shall be 35 watts. Low-voltage priority override relays shall be furnished as part of these controls with all wiring to the racks to allow override of the volume controls for priority announcements.

2.11 EQUIPMENT RACKS

Equipment shall be mounted on 482.6 mm (19 inch) racks in accordance with EIA 310-D and located as shown on drawings. Ventilated rear panels, solid side panels, and solid top panels shall be provided. Perforations or louvers may be provided in front panels to ensure adequate ventilation of equipment. The racks and panels shall be factory finished with a uniform baked enamel over rust inhibiting primer.

2.12 SPEAKER AND MICROPHONE CABLE

Cables shall be of the gauge required depending upon the cable run length. In no case shall any cable be used which is smaller than 20 AWG. Insulation on the conductors shall be polyvinyl chloride (PVC) or an equivalent synthetic thermoplastic not less than 0.2 mm (0.009 inch). Cables shall be shielded with a 34-gauge tinned soft copper strand formed into a braid. Cables shall be jacketed with a PVC compound. The jacket thickness shall be 0.5 mm (0.0200 inch) minimum.

2.13 POWER SURGE PROTECTION

Major components of the system such as power amplifiers, mixer-preamplifiers, phonographs, and tuners, shall have a device, whether internal or external, which provides protection against voltage spikes and current surges originating from commercial power sources.

2.14 SIGNAL SURGE PROTECTION

Major components of the system shall have internal protection circuits which protects the component from mismatched loads, direct current, and shorted output lines.

PART 3 EXECUTION

3.1 INSTALLATION

All equipment shall be installed as indicated and specified, and in accordance with the manufacturer's recommendations except where otherwise indicated. Equipment mounted out-of-doors or subject to inclement conditions shall be weatherproofed.

3.1.1 Equipment Racks

Racks shall be mounted side-by-side and bolted together. Items of the same function shall be grouped together, either vertically or side-by-side. Controls shall be symmetrically arranged at a height as shown. Audio input and interconnections shall be made with approved shielded cable and plug connectors; output connections may be screw terminal type. All connections to power supplies shall utilize standard male plug and female receptacle connectors with the female receptacle being the source side of the connection. Inputs, outputs, interconnections, test points, and relays shall be accessible at the rear of the equipment rack for maintenance and testing. Each item shall be removable from the rack without disturbing other items or connections. Empty space in equipment racks shall be covered by blank panels so that the entire front of the rack is occupied by panels.

3.1.2 Wiring

Wiring shall be installed in rigid conduit, intermediate metal conduit, cable trays, or electric metallic tubing as specified in Section 16415 ELECTRICAL WORK, INTERIOR. Wiring for microphone, grounding, line level, video, speaker and power cables shall be isolated from each other by physical isolation and metallical shielding. Shielding shall be terminated at only one end.

3.2 GROUNDING

All grounding practices shall comply with NFPA 70. The antenna mast shall be separately grounded. The system shall utilize a multiple-point signal grounding scheme where conductive path connections are required between each piece of equipment and the reference ground point. An isolated ground bar for power shall be provided for the connection of the main system components. The ground bar shall be connected to the main service ground utilizing a No. 6 conductor.

3.3 ACCEPTANCE TESTS

After installation has been completed, the Contractor shall conduct acceptance tests, utilizing the approved test procedures, to demonstrate that equipment operates in accordance with specification requirements. The Contractor shall notify the Contracting Officer 30 days prior to the performance of tests. In no case shall notice be given until after the Contractor has received written Contracting Officer approval of the test plans as specified. The acceptance tests shall include originating and receiving messages at specified stations, at proper volume levels, without cross talk or noise from other links or nondesignated units.

3.4 TRAINING

The Contractor shall conduct a training course for 6 members of the operating and maintenance staff as designated by the Contracting Officer. The training course will be given at the installation during normal working hours for a total of 8 hours and shall start after the system is functionally complete but prior to final acceptance tests. The field instructions shall cover all of the items contained in the approved operating and maintenance manuals, as well as demonstrations of routine maintenance operations. The Contracting Officer shall be notified at least 14 days prior to the start of the training course.

End of Section