SOLICITATION, OFFER, AND AWARD *(Construction, Alteration, or Repair)*	1. SOLICITATION NUMBER	2. TYPE OF SOLICITATION	3. DATE ISSUED	PAGE OF PAGES
	DACA67-99-B-0002	[X] SEALED BID *(IFB)* [ ] NEGOTIATED *(RFP)*	6 NOV 98	1

IMPORTANT - The "offer" section on the reverse must be fully completed by the offeror.

CONTRACT NUMBER	5. REQUISITION/PURCHASE REQUEST NUMBER	6. PROJECT NUMBER
DACA67-99-C-0004	W68MD9-8222-4577	PN: PQWY97-3002

7. ISSUED BY CODE W68MD9

Seattle District, Corps of Engineers
ATTN: CENWS-CT-CB
PO Box 3755
Seattle, WA 98124-3755

8. ADDRESS OFFER TO

Seattle District, Corps of Engineers
PO Box 3755 ATTN: CENWS-CT-CB
Seattle, WA 98124-3755

HAND CARRY: Preston Conference Room
4735 East Marginal Way South
Seattle, WA 98134-2385
BID OPENING ROOM: Preston Conference Room

9. FOR INFORMATION CALL	A. NAME	B. TELEPHONE NUMBER *(Include area code) (NO COLLECT CALLS)*
▶	See Information Page inside Front Cover	See Information Page inside Front Cover

SOLICITATION

NOTE: In sealed bid solicitations "offer" and "offeror" mean "bid" and "bidder".

10. THE GOVERNMENT REQUIRES PERFORMANCE OF THE WORK DESCRIBED IN THESE DOCUMENTS *(Title, identifying number, date):*

Furnish all labor, materials and equipment and perform all work for C-14 Squadron Operations/AMU Facility, McChord AFB, Washington, in accordance with the attached Contract Clauses, Special Clauses, Technical Specifications and Drawings.

1. Solicitation No. DACA67-99-B-0002 dated 6 Nov 98 with 1 amendment thereto.
2. Wage Determination No. WA980002 with 14 modifications thereto.
3. Drawings as listed in Section 00800.

NOTE: This IFB is 100% Set-Aside for Small Businesses

11. The Contractor shall begin performance within 10 calendar days and complete it within 360 calendar days after receiving [ ] award, [X] notice to proceed. This performance period is [X] mandatory, [ ] negotiable. *(See* Paragraph SC-1 *.)*

12A. THE CONTRACTOR MUST FURNISH ANY REQUIRED PERFORMANCE PAYMENT BONDS? *(If "YES," indicate within how many calendar days after award in Item 12B.)*

[X] YES [ ] NO

12B. CALENDAR DAYS: 10

13. ADDITIONAL SOLICITATION REQUIREMENTS:

A. Sealed offers in original and 0 copies to perform the work required are due at the place specified in Item 8 by 1:00 pm *(hour)* local time 8 Dec 98 *(date)*. If this is a sealed bid solicitation, offers will be publicly opened at that time. Sealed envelopes containing offers shall be marked to show the offeror's name and address, the solicitation number, and the date and time offers are due.

B. An offer guarantee [X] is, [ ] is not required.

C. All offers are subject to the (1) work requirements, and (2) other provisions and clauses incorporated in the solicitation in full text or by reference.

D. Offers providing less than 120 calendar days for Government acceptance after the date offers are due will not be considered and will be rejected.

~~Contract no. DACA67-99-C-0004~~

OFFER *(Must be fully completed by offeror)*

Solicitation No. DACA67-99-B-0002

14. NAME AND ADDRESS OF OFFEROR *(Include ZIP Code)*

Bodenhamer, Inc.
3711 49th Ave. SW
Olympia, WA 98512

Tax ID No: 91-1657406 DUNS No: 05-566-9014
eMail:

CODE FACILITY CODE

15. TELEPHONE NUMBER *(Include area code)*

(360) 754-4700 | FAX: (360) 943-0440

16. REMITTANCE ADDRESS *(Include only if different than Item 14)*

17. The offeror agrees to perform the work required at the prices specified below in strict accordance with the terms of this solicitation, if this offer is accepted by the Government in writing within 120 calendar days after the date offers are due. *(Insert any number equal or greater than the minimum requirement stated in 13D. Failure to insert any number means the offeror accepts the minimum in Item 13D.)*

AMOUNTS ▶ See page 00010-4

18. The offeror agrees to furnish any required performance and payment bonds.

19. ACKNOWLEDGEMENT OF AMENDMENTS
(The offeror acknowledges receipt of amendments to the solicitation - give number and date of each)

AMENDMENT NO.	1									
DATE	12/2/98									

20A. NAME AND TITLE OF PERSON AUTHORIZED TO SIGN OFFER *(Type or print)*

Allen Bodenhamer, President

20B. SIGNATURE

20C. OFFER DATE

12/8/98

AWARD *(To be completed by Government)*

ITEMS ACCEPTED

0001, 0002, 0003 and 0004

22. AMOUNT

$4,808,000.

23. ACCOUNTING AND APPROPRIATION DATA

57933000000 088082 32000029KZ32100000000 NA 35026

24. SUBMIT INVOICES TO ADDRESS SHOWN IN *(4 copies unless otherwise specified)* ▶ ITEM 26

25. OTHER THAN FULL AND OPEN COMPETITION PURSUANT TO
☐ 10 U.S.C. 2304(c) ( ) ☐ 41 U.S.C. 253(c) ( )

26. ADMINISTERED BY CODE

Fort Lewis Area Office
USAED, Seattle
PO Box 92146
Tillicum, WA 98492-0146

27. PAYMENT WILL BE MADE BY

US Army Corps of Engineers Finance Center
CEFC-AO-P
5720 Integrity Drive
Millington, TN 38054-5005

CONTRACTING OFFICER WILL COMPLETE ITEM 28 OR 29 AS APPLICABLE

☐ 28. NEGOTIATED AGREEMENT *(Contractor is required to sign this document and return copies to the issuing office.)* Contractor agrees to furnish and deliver all items or perform all work requirements identified on this form and any continuation sheets for the consideration stated in this contract. The rights and obligations of the parties to this contract shall be governed by (a) this contract award, (b) the solicitation, and (c) the clauses, representations, certifications, and specifications incorporated by reference in or attached to this contract.

☒ 29. AWARD. *(Contractor is not required to sign this document.)* Your offer on this solicitation is hereby accepted as to the items listed. This award consummates the contract, which consists of (a) the Government solicitation and your offer, and (b) this contract award. No further contractual document is necessary.

30A. NAME AND TITLE OF CONTRACTOR OR PERSON AUTHORIZED TO SIGN *(Type or print)*

30B. SIGNATURE

30C. DATE

31A. NAME OF CONTRACTING OFFICER *(Type or print)*

KENT R. PAUL

31B. UNITED STATES OF AMERICA

BY

31C. AWARD DATE

98 Dec 30

IFB No: DACA67-99-B-0002

Contract No.: DACA67-99-C-0002

IF THE CONTRACTOR IS A CORPORATION OR PARTNERSHIP, THE APPLICABLE FORM LISTED BELOW MUST BE COMPLETED. IN THE ALTERNATIVE, OTHER EVIDENCE MUST BE SUBMITTED TO SUBSTANTIATE THE AUTHORITY OF THE PERSON SIGNING THE CONTRACT. IF A CORPORATION, THE SAME OFFICER SHALL NOT EXECUTE BOTH THE CONTRACT AND THE CERTIFICATE.

CORPORATE CERTIFICATE

I, Chuck Holcom, certify that I am the _____ Secretary of the corporation named as Contractor herein; that Allen Bodenhamer, who signed this contract on behalf of the Contractor was then President of said corporation; that said contract was duly signed for and on behalf of said corporation by authority of its governing body and is within the scope of its corporate powers.

_____ (Secretary) (CORPORATE SEAL)

AUTHORITY TO BIND PARTNERSHIP

This is to certify that the names, signatures and Social Security Numbers of all partners are listed below and that the person signing the contract has authority actually to bind the partnership pursuant to its partnership agreements. Each of the partners individually has full authority to enter into and execute contractual instruments on behalf of said partnership with the United States of America, except as follows: (state "none" or describe limitations, if any).

This authority shall remain in full force and effect until such time as the revocation of authority by any cause whatsoever has been furnished in writing to, and acknowledged by, the Contracting Officer.

(Names, Signatures and Social Security Numbers of all Partners)

NAME	SIGNATURE	SOCIAL SECURITY NO.

CONTRACT NUMBER DACA67-99-C-0004

SCHEDULE

ITEM NUMBER	DESCRIPTION	QUANTITY	UNIT	UNIT PRICE	AMOUNT
	BASE ITEMS				
0001	All Work for C-17 Squadron Operations/AMU Facility, Complete to a Line 5 Feet Outside the Building Walls, Except for Item 0006	1	JOB	L.S.	$ 3,979,000
0002	All Work for Site Work and Utilities Beyond a Line 5 Feet Outside the Building Walls Except for Items 0003, 0004, and 0005	1	JOB	L.S.	$ 600,000
		TOTAL BASE ITEMS			$ 4,579,000
	OPTIONAL ITEMS				
0003	All Work for Re-Alignment of Cross Taxiway Road and Installation of the Road Irrigation System	1	JOB	L.S.	$ 107,000
0004	All Work for Expanded North Parking Lot Area	1	JOB	L.S.	$ 122,000
0005	All Work for Planting of Street Trees	1	JOB	L.S.	$ 26,000
0006	All Work for Prewired Workstations	1	JOB	L.S.	$ 330,000
		TOTAL OPTIONAL ITEMS			$ 585,000
		TOTAL BASE AND OPTIONAL ITEMS			$ 5,164,000

NOTE: Neither Optional Item 0004 nor 0005 will be awarded unless Optional Item 0003 is awarded.

AMENDMENT OF SOLICITATION/MODIFICATION OF CONTRACT

1. CONTRACT ID CODE	PAGE OF PAGES
	1 2

2. AMENDMENT/~~MODIFICATION~~ NO.	3. EFFECTIVE DATE	4. REQUISITION/PURCHASE REQ. NO.	5. PROJECT NO. (If applicable)
0001	12/02/98	W68MD9-8222-4577	973002

6. ISSUED BY CODE W68MD9

US ARMY ENGINEER DISTRICT, SEATTLE
PO BOX 3755
SEATTLE WA 98124-3755

John M Norway C16(206) 764-6659

7. ADMINISTERED BY (If other than Item 6) CODE

8. NAME AND ADDRESS OF CONTRACTOR (No., street, county, State and ZIP Code) Vendor ID: 00000000

CODE FACILITY CODE

(X) X

9A. AMENDMENT OF SOLICITATION NO.
DACA67-99-B-0002

9B. DATED (SEE ITEM 11)
11/06/98

10A. MODIFICATION OF CONTRACT/ORDER NO.

10B. DATED (SEE ITEM 13)

11. THIS ITEM ONLY APPLIES TO AMENDMENTS OF SOLICITATIONS

☒ The above numbered solicitation is amended as set forth in Item 14. The hour and date specified for receipt of Offers ☐ is extended, ☒ is not extended.

Offers must acknowledge receipt of this amendment prior to the hour and date specified in the solicitation or as amended, by one of the following methods: ~~(a) By completing Items 8 and 15, and returning _____ copies of the amendment~~; (b) By acknowledging receipt of this amendment on each copy of the offer submitted; or (c) By separate letter or telegram which includes a reference to the solicitation and amendment numbers. FAILURE OF YOUR ACKNOWLEDGMENT TO BE RECEIVED AT THE PLACE DESIGNATED FOR THE RECEIPT OF OFFERS PRIOR TO THE HOUR AND DATE SPECIFIED MAY RESULT IN REJECTION OF YOUR OFFER. If by virtue of this amendment you desire to change an offer already submitted, such change may be made by telegram or letter, provided each telegram or letter makes reference to the solicitation and this amendment, and is received prior to the opening hour and date specified.

12. ACCOUNTING AND APPROPRIATION DATA (If required)

13. THIS ITEM APPLIES ONLY TO MODIFICATIONS OF CONTRACTS/ORDERS, IT MODIFIES THE CONTRACT/ORDER NO. AS DESCRIBED IN ITEM 14.

(X)	
	A. THIS CHANGE ORDER IS ISSUED PURSUANT TO: (Specify authority) THE CHANGES SET FORTH IN ITEM 14 ARE MADE IN THE CONTRACT ORDER NO. IN ITEM 10A.
	B. THE ABOVE NUMBERED CONTRACT/ORDER IS MODIFIED TO REFLECT THE ADMINISTRATIVE CHANGES (such as changes in paying office, appropriation date, etc.) SET FORTH IN ITEM 14, PURSUANT TO THE AUTHORITY OF FAR 43.103 (b).
	C. THIS SUPPLEMENTAL AGREEMENT IS ENTERED INTO PURSUANT TO AUTHORITY OF:
	D. OTHER (Specify type of modification and authority)

E. IMPORTANT: Contractor ☐ is not, ☐ is required to sign this document and return _____ copies to the issuing office.

14. DESCRIPTION OF AMENDMENT/~~MODIFICATION~~ (Organized by UCF section headings, including solicitation/contract subject matter where feasible.)

DACA67-99-B-0002, C-17 Squadron Operations / AMU Facility, McChord AFB, Washington

Except as provided herein, all terms and conditions of the document referenced in Item 9A or 10A, as heretofore changed, remains unchanged and in full force and effect.

15A. NAME AND TITLE OF SIGNER (Type or print)		16A. NAME AND TITLE OF CONTRACTING OFFICER (Type or print)	
15B. CONTRACTOR/OFFEROR (Signature of person authorized to sign)	15C. DATE SIGNED	16B. UNITED STATES OF AMERICA BY (Signature of Contracting Officer)	16C. DATE SIGNED

NSN 7540-01-152-8070
PREVIOUS EDITION UNUSABLE

STANDARD FORM 30 (REV. 10-83)
Prescribed by GSA
FAR (48 CFR) 53.243

1. This Amendment provides for the following:

   a. Revision to drawing Plate A8.1 by notation in the specifications (Section 00800).
   b. Update Davis-Bacon Wage Rate WA980002, Mod. No. 15 dated 11/20/98 within Section 00800.
   c. Revisions to Technical Specifications:
      (1) Revision of the ceiling tile detail in acoustical ceilings - specification section 09510.
      (2) Deletion of paragraph "Basis of Payment/Method of Measurement" - Specification 03300A.
      (3) Addition of a new specification section 13080 - Seismic Protection for Mechanical, Electrical Equipment.

2. The attached revised specification pages supersede and replace corresponding specification pages and are to be inserted in sequence. Specification changes are shown lined out for deletions and underlined for additions with a vertical line in the margin.

3. The Bid Opening date and time remain UNCHANGED at 1:00 P.M. local time on 8 December 1998.

4. NOTICE TO BIDDERS: Bidders must acknowledge receipt of this amendment by number and date on bid or by telephone. Please mark outside of envelope containing bid to show amendments received.

ENCLOSURES:

1.	Section 00800-15	(Revised)
2-17	Davis-Bacon WA980002, Mod. No. 15 dated 11/20/98	(Updated)
18.	01000-3	
19.	01000-4	(Revised)
20.	03300A Page 1	(Revised)
21.	03300A Page 2	
22.	09510-3	(Revised)
23.	09510-4	
24-33	13080-1 thru -10	(New Section)

TABLE OF CONTENTS
SECTION 00700
CONTRACT CLAUSES

1	52.252-2	CLAUSES INCORPORATED BY REFERENCE (FEB 1998)
2	52.201-4001	SUCCESSOR CONTRACTING OFFICERS (52.0201-4001)
3	52.201-7000	CONTRACTING OFFICER'S REPRESENTATIVE (DEC 1991)
4	52.202-1 I	DEFINITIONS (OCT 1995)--ALTERNATE I (APR 1984)
5	52.203-3	GRATUITIES (APR 1984)
6	52.203-5	COVENANT AGAINST CONTINGENT FEES (APR 1984)
7	52.203-7	ANTI-KICKBACK PROCEDURES (JUL 1995)
8	52.203-8	CANCELLATION, RESCISSION, AND RECOVERY OF FUNDS FOR ILLEGAL OR IMPROPER ACTIVITY (JAN 1997)
9	52.203-9	reserved
10	52.203-10	PRICE OR FEE ADJUSTMENT FOR ILLEGAL OR IMPROPER ACTIVITY (JAN 1997)
11	52.203-12	LIMITATION ON PAYMENTS TO INFLUENCE CERTAIN FEDERAL TRANSACTIONS (JUN 1997)
12	52.203-7001	SPECIAL PROHIBITION ON EMPLOYMENT (JUN 1997)
13	52.203-7002	DISPLAY OF DOD HOTLINE POSTER (DEC 1991)
14	52.204-4	PRINTING/COPYING DOUBLE-SIDED ON RECYCLED PAPER (JUN 1996)
15	52.204-7003	CONTROL OF GOVERNMENT PERSONNEL WORK PRODUCT (APR 1992)
16	52.209-6	PROTECTING THE GOVERNMENT'S INTEREST WHEN SUBCONTRACTING WITH CONTRACTOR DEBARRED, SUSPENDED, OR PROPOSED FOR DEBARMENT (JUL 1995)
17	52.209-7004	SUBCONTRACTING WITH FIRMS THAT ARE OWNED OR CONTROLLED BY THE GOVERNMENT OF A TERRORIST COUNTRY (MAR 1998)
18	52.214-26	AUDIT AND RECORDS--SEALED BIDDING (OCT 1997)
19	52.214-27	PRICE REDUCTION FOR DEFECTIVE COST OR PRICING DATA--MODIFICATIONS--SEALED BIDDING (OCT 1997)
20	52.214-28	SUBCONTRACTOR COST OR PRICING DATA--MODIFICATIONS—SEALED BIDDING (OCT 1997)
21	52.214-29	ORDER OF PRECEDENCE--SEALED BIDDING (JAN 1986)
22	52.219-8	UTILIZATION OF SMALL, SMALL DISADVANTAGED AND WOMEN-OWNED SMALL BUSINESS CONCERNS (JUN 1997)
23	52.219-9 I	SMALL, SMALL DISADVANTAGED AND WOMEN-OWNED SMALL BUSINESS SUBCONTRACTING PLAN (AUG 1996)--ALTERNATE I (OCT 1995)
24	52.219-14	LIMITATIONS ON SUBCONTRACTING (DEC 1996)
25	52.219-16	LIQUIDATED DAMAGES--SUBCONTRACTING PLAN (AUG 1998)
26	52.222-3	CONVICT LABOR (AUG 1996)
27	52.222-4	CONTRACT WORK HOURS AND SAFETY STANDARDS ACT—OVERTIME COMPENSATION (JUL 1995)
28	52.222-6	DAVIS-BACON ACT (FEB 1995)
29	52.222-7	WITHHOLDING OF FUNDS (FEB 1988)
30	52.222-8	PAYROLLS AND BASIC RECORDS (FEB 1988)
31	52.222-9	APPRENTICES AND TRAINEES (FEB 1988)
32	52.222-10	COMPLIANCE WITH COPELAND ACT REQUIREMENTS (FEB 1988)
33	52.222-11	SUBCONTRACTS (LABOR STANDARDS) (FEB 1988)
34	52.222-12	CONTRACT TERMINATION--DEBARMENT (FEB 1988)
35	52.222-13	COMPLIANCE WITH DAVIS-BACON AND RELATED ACT REGULATIONS (FEB 1988)
36	52.222-14	DISPUTES CONCERNING LABOR STANDARDS (FEB 1988)
37	52.222-15	CERTIFICATION OF ELIGIBILITY (FEB 1988)
38	52.222-23	NOTICE OF REQUIREMENT FOR AFFIRMATIVE ACTION TO ENSURE EQUAL EMPLOYMENT OPPORTUNITY (APR 1984)
39	52.222-26	EQUAL OPPORTUNITY (APR 1984)
40	52.222-27	AFFIRMATIVE ACTION COMPLIANCE REQUIREMENTS FOR CONSTRUCTION (APR 1984)
41	52.222-35	AFFIRMATIVE ACTION FOR DISABLED VETERANS AND VETERANS OF THE VIETNAM ERA (APR 1998)
42	52.222-36	AFFIRMATIVE ACTION FOR WORKERS WITH DISABILITIES (JUN 1998)
43	52.222-37	EMPLOYMENT REPORTS ON DISABLED VETERANS AND VETERANS OF THE VIETNAM ERA (APR 1998)
44	52.223-2	CLEAN AIR AND WATER (APR 1984)
45	52.223-6	DRUG-FREE WORKPLACE (JAN 1997)
46	52.223-14	TOXIC CHEMICAL RELEASE REPORTING (OCT 1996)
47	52.223-7004	DRUG-FREE WORK FORCE (SEP 1988)
48	52.225-5	BUY AMERICAN ACT--CONSTRUCTION MATERIALS (JUN 1997)
49	52.225-11	RESTRICTIONS ON CERTAIN FOREIGN PURCHASES (AUG 1998)
50	52.226-1	UTILIZATION OF INDIAN ORGANIZATIONS AND INDIAN-OWNED ECONOMIC ENTERPRISE (SEP 1996)
51	52.227-1	AUTHORIZATION AND CONSENT (JUL 1995)

52	52.227-2	NOTICE AND ASSISTANCE REGARDING PATENT AND COPYRIGHT INFRINGEMENT (AUG 1996)
53	52.227-4	PATENT INDEMNITY--CONSTRUCTION CONTRACTS (APR 1984)
54	52.227-7033	RIGHTS IN SHOP DRAWINGS (APR 1966)
55	52.228-2	ADDITIONAL BOND SECURITY (OCT 1997)
56	52.228-12	PROSPECTIVE SUBCONTRACTOR REQUESTS FOR BONDS (OCT 1995)
57	52.229-3	FEDERAL, STATE, AND LOCAL TAXES (JAN 1991)
58	52.231-7000	SUPPLEMENTAL COST PRINCIPLES (DEC 1991)
59	52.232-5	PAYMENTS UNDER FIXED-PRICE CONSTRUCTION CONTRACTS (MAY 1997)
60	52.232-17	INTEREST (JUN 1996)
61	52.232-18	AVAILABILITY OF FUNDS (APR 1984)
62	52.232-23	ASSIGNMENT OF CLAIMS (JAN 1986)
63	52.232-27	PROMPT PAYMENT FOR CONSTRUCTION CONTRACTS (JUN 1997)
64	52.232-7009	PAYMENT BY ELECTRONIC FUNDS TRANSFER (CCR) (JUN 1998)
65	52.233-1 I	DISPUTES (OCT 1995)--ALTERNATE I (DEC 1991)
66	52.233-3	PROTEST AFTER AWARD (AUG 1996)
67	52.236-2	DIFFERING SITE CONDITIONS (APR 1984)
68	52.236-3	SITE INVESTIGATION AND CONDITIONS AFFECTING THE WORK (APR 1984)
69	52.236-5	MATERIAL AND WORKMANSHIP (APR 1984)
70	52.236-6	SUPERINTENDENCE BY THE CONTRACTOR (APR 1984)
71	52.236-7	PERMITS AND RESPONSIBILITIES (NOV 1991)
72	52.236-8	OTHER CONTRACTS (APR 1984)
73	52.236-9	PROTECTION OF EXISTING VEGETATION, STRUCTURES, EQUIPMENT, UTILITIES, AND IMPROVEMENTS (APR 1984)
74	52.236-10	OPERATIONS AND STORAGE AREAS (APR 1984)
75	52.236-11	USE AND POSSESSION PRIOR TO COMPLETION (APR 1984)
76	52.236-12	CLEANING UP (APR 1984)
77	52.236-13	ACCIDENT PREVENTION (NOV 1991)
78	52.236-14	AVAILABILITY AND USE OF UTILITY SERVICES (APR 1984)
79	52.236-15	SCHEDULES FOR CONSTRUCTION CONTRACTS (APR 1984)
80	52.236-21	SPECIFICATIONS AND DRAWINGS FOR CONSTRUCTION (FEB 1997)
81	52.236-26	PRECONSTRUCTION CONFERENCE (FEB 1995)
82	52.236-7000	MODIFICATION PROPOSALS--PRICE BREAKDOWN (DEC 1991)
83	52.242-13	BANKRUPTCY (JUL 1995)
84	52.242-14	SUSPENSION OF WORK (APR 1984)
85	52.243-4	CHANGES (AUG 1987)
86	52.243-7001	PRICING OF CONTRACT MODIFICATIONS (DEC 1991)
87	52.244-6	SUBCONTRACTS FOR COMMERCIAL ITEMS AND COMMERCIAL COMPONENTS (APR 1998)
88	52.245-1	PROPERTY RECORDS (APR 1984)
89	52.245-2	GOVERNMENT PROPERTY (FIXED-PRICE CONTRACTS) (DEC 1989)
90	52.245-4	GOVERNMENT-FURNISHED PROPERTY (SHORT FORM) (APR 1984)
91	52.245-7001	REPORTS OF GOVERNMENT PROPERTY (MAY 1994)
92	52.246-12	INSPECTION OF CONSTRUCTION (AUG 1996)
93	52.246-21	WARRANTY OF CONSTRUCTION (MAR 1994)
94	52.248-3	VALUE ENGINEERING--CONSTRUCTION (MAR 1989)
95	52.248-7000	PREPARATION OF VALUE ENGINEERING CHANGE PROPOSALS (MAY 1994)
96	52.249-2 I	TERMINATION FOR CONVENIENCE OF THE GOVERNMENT (FIXED-PRICE) (SEP 1996)- ALTERNATE I (SEP 1996)
97	52.249-10	DEFAULT (FIXED-PRICE CONSTRUCTION) (APR 1984)
98	52.249-5000	BASIS FOR SETTLEMENT OF PROPOSALS
99	52.252-4	ALTERATIONS IN CONTRACT (APR 1984)
100	52.253-1	COMPUTER GENERATED FORMS (JAN 1991)

SECTION 00700
CONTRACT CLAUSES

1 52.252-2 CLAUSES INCORPORATED BY REFERENCE (FEB 1998)

This contract incorporates one or more clauses by reference, with the same force and effect as if they were given in full text. Upon request, the Contracting Officer will make their full text available. Also, the full text of a clause may be accessed electronically at these addresses:

http://www.arnet.gov/far
http://farsite.hill.af.mil
http://www.dtic.mil/dfars

(End of clause)

2 52.201-4001 SUCCESSOR CONTRACTING OFFICERS (52.0201-4001)

The Contracting Officer who signed this contract is the primary Contracting Officer for the contract. Neverthless, any Contracting Officer assigned to the Seattle District and acting within his/her authority may take formal action on this contract when a contract action needs to be taken and the primary Contracting Officer is unavailable.

3 52.201-7000 CONTRACTING OFFICER'S REPRESENTATIVE (DEC 1991)

(a) Definition. "Contracting officer's representative" means an individual designated in accordance with subsection 201.602-2 of the Defense Federal Acquisition Regulation Supplement and authorized in writing by the Contracting Officer to perform specific technical or administrative functions.

(b) If the Contracting Officer designates a contracting officer's representative (COR), the Contractor will receive a copy of the written designation. It will specify the extent of the COR's authority to act on behalf of the Contracting Officer. The COR is not authorized to make any commitments or changes that will affect price, quality, quantity, delivery, or any other term or condition of the contract.

(End of clause)

4 52.202-1 I DEFINITIONS (OCT 1995)--ALTERNATE I (APR 1984)

(a) "Head of the agency" (also called "agency head") or "Secretary" means the Secretary (or Attorney General, Administrator, Governor, Chairperson, or other chief official, as appropriate) of the agency, including any deputy or assistant chief official of the agency; and the term "authorized representative" means any person, persons, or board (other than the Contracting Officer) authorized to act for the head of the agency or Secretary.

(b) Commercial component means any component that is a commercial item.

(c) Component means any item supplied to the Federal Government as part of an end item or of another component.

(d) Nondevelopmental item means--

(1) Any previously developed item of supply used exclusively for governmental purposes by a Federal agency, a State or local government, or a foreign government with which the United States has a mutual defense cooperation agreement;

(2) Any item described in paragraph (e)(1) of this definition that requires only minor modification or modifications of a type customarily available in the commercial marketplace in order to meet the requirements of the procuring department or agency; or

(3) Any item of supply being produced that does not meet the requirements of paragraph (e)(1) or (e)(2) solely because the item is not yet in use.

(e) "Contracting Officer" means a person with the authority to enter into, administer, and/or terminate contracts and make related determinations and findings. The term includes certain authorized representatives of the Contracting Officer acting within the limits of their authority as delegated by the Contracting Officer.

(f) Except as otherwise provided in this contract, the term "subcontracts" includes, but is not limited to, purchase orders and changes and modifications to purchase orders under this contract.

(End of clause)

5 52.203-3 GRATUITIES (APR 1984)

(a) The right of the Contractor to proceed may be terminated by written notice if, after notice and hearing, the agency head or a designee determines that the Contractor, its agent, or another representative--

(1) Offered or gave a gratuity (e.g., an entertainment or gift) to an officer, official, or employee of the Government; and

(2) Intended, by the gratuity, to obtain a contract or favorable treatment under a contract.

(b) The facts supporting this determination may be reviewed by any court having lawful jurisdiction.

(c) If this contract is terminated under paragraph (a) above, the Government is entitled--

(1) To pursue the same remedies as in a breach of the contract; and

(2) In addition to any other damages provided by law, to exemplary damages of not less than 3 nor more than 10 times the cost incurred by the Contractor in giving gratuities to the person concerned, as determined by the agency head or a designee. (This subparagraph (c)(2) is applicable only if this contract uses money appropriated to the Department of Defense.)

(d) The rights and remedies of the Government provided in this clause shall not be exclusive and are in addition to any other rights and remedies provided by law or under this contract.

(End of clause)

(R 7-104.16 1952 MAR)

6 52.203-5 COVENANT AGAINST CONTINGENT FEES (APR 1984)

(a) The Contractor warrants that no person or agency has been employed or retained to solicit or obtain this contract upon an agreement or understanding for a contingent fee, except a bona fide employee or agency. For breach or violation of this warranty, the Government shall have the right to annul this contract without liability or, in its discretion, to deduct from the contract price or consideration, or otherwise recover, the full amount of the contingent fee.

(b) "Bona fide agency," as used in this clause, means an established commercial or selling agency, maintained by a contractor for the purpose of securing business, that neither exerts nor proposes to exert improper influence to solicit or obtain Government contracts nor holds itself out as being able to obtain any Government contract or contracts through improper influence.

"Bona fide employee," as used in this clause, means a person, employed by a Contractor and subject to the Contractor's supervision and control as to time, place, and manner of performance, who neither exerts nor proposes to exert improper influence to solicit or obtain Government contracts nor holds out as being able to obtain any Government contract or contracts through improper influence.

"Contingent fee," as used in this clause, means any commission, percentage, brokerage, or other fee that is contingent upon the success that a person or concern has in securing a Government contract.

"Improper influence," as used in this clause, means any influence that induces or tends to induce a Government employee or officer to give consideration or to act regarding a Government contract on any basis other than the merits of the matter.

(End of clause)

(R 7-103.20 1958 JAN)

(R 1-1.503)

(R 1-7.102-18)

7 52.203-7 ANTI-KICKBACK PROCEDURES (JUL 1995)

(a) Definitions.

"Kickback," as used in this clause, means any money, fee, commission, credit, gift, gratuity, thing of value, or compensation of any kind which

is provided, directly or indirectly, to any prime Contractor, prime Contractor employee, subcontractor, or subcontractor employee for the purpose of improperly obtaining or rewarding favorable treatment in connection with a prime contract or in connection with a subcontract relating to a prime contract.

"Person," as used in this clause, means a corporation, partnership, business association of any kind, trust, joint-stock company, or individual.

"Prime contract," as used in this clause, means a contract or contractual action entered into by the United States for the purpose of obtaining supplies, materials, equipment, or services of any kind.

"Prime Contractor" as used in this clause, means a person who has entered into a prime contract with the United States.

"Prime Contractor employee," as used in this clause, means any officer, partner, employee, or agent of a prime Contractor.

"Subcontract," as used in this clause, means a contract or contractual action entered into by a prime Contractor or subcontractor for the purpose of obtaining supplies, materials, equipment, or services of any kind under a prime contract.

"Subcontractor," as used in this clause, (1) means any person, other than the prime Contractor, who offers to furnish or furnishes any supplies, materials, equipment, or services of any kind under a prime contract or a subcontract entered into in connection with such prime contract, and (2) includes any person who offers to furnish or furnishes general supplies to the prime Contractor or a higher tier subcontractor.

"Subcontractor employee," as used in this clause, means any officer, partner, employee, or agent of a subcontractor.

(b) The Anti-Kickback Act of 1986 (41 U.S.C. 51-58) (the Act), prohibits any person from--

(1) Providing or attempting to provide or offering to provide any kickback;

(2) Soliciting, accepting, or attempting to accept any kickback; or

(3) Including, directly or indirectly, the amount of any kickback in the contract price charged by a prime Contractor to the United States or in the contract price charged by a subcontractor to a prime Contractor or higher tier subcontractor.

(c)(1) The Contractor shall have in place and follow reasonable procedures designed to prevent and detect possible violations described in paragraph (b) of this clause in its own operations and direct business relationships.

(2) When the Contractor has reasonable grounds to believe that a violation described in paragraph (b) of this clause may have occurred, the Contractor shall promptly report in writing the possible violation. Such reports shall be made to the inspector general of the contracting agency, the head of the contracting agency if the agency does not have an inspector general, or the Department of Justice.

(3) The Contractor shall cooperate fully with any Federal agency investigating a possible violation described in paragraph (b) of this clause.

(4) The Contracting Officer may (i) offset the amount of the kickback against any monies owed by the United States under the prime contract and/or (ii) direct that the Prime Contractor withhold from sums owed a subcontractor under the prime contract the amount of the kickback. The Contracting Officer may order that monies withheld under subdivision (c)(4)(ii) of this clause be paid over to the Government unless the Government has already offset those monies under subdivision (c)(4)(i) of this clause. In either case, the Prime Contractor shall notify the Contracting Officer when the monies are withheld.

(5) The Contractor agrees to incorporate the substance of this clause, including subparagraph (c)(5) but excepting subparagraph (c)(1), in all subcontracts under this contract which exceed $100,000.

(End of clause)

8 52.203-8 CANCELLATION, RESCISSION, AND RECOVERY OF FUNDS FOR ILLEGAL OR IMPROPER ACTIVITY (JAN 1997)

(a) If the Government receives information that a contractor or a person has engaged in conduct constituting a violation of subsection (a), (b), (c), or (d) of Section 27 of the Office of Federal Procurement Policy Act (41 U.S.C. 423) (the Act), as amended by section 4304 of the National

Defense Authorization Act for Fiscal Year 1996 (Pub. L. 104-106), the Government may--

(1) Cancel the solicitation, if the contract has not yet been awarded or issued; or

(2) Rescind the contract with respect to which--

(i) The Contractor or someone acting for the Contractor has been convicted for an offense where the conduct constitutes a violation of subsection 27 (a) or (b) of the Act for the purpose of either--

(A) Exchanging the information covered by such subsections for anything of value; or

(B) Obtaining or giving anyone a competitive advantage in the award of a Federal agency procurement contract; or

(ii) The head of the contracting activity has determined, based upon a preponderance of the evidence, that the Contractor or someone acting for the Contractor has engaged in conduct constituting an offense punishable under subsection 27(e)(1) of the Act.

(b) If the Government rescinds the contract under paragraph (a) of this clause, the Government is entitled to recover, in addition to any penalty prescribed by law, the amount expended under the contract.

(c) The rights and remedies of the Government specified herein are not exclusive, and are in addition to any other rights and remedies provided by law, regulation, or under this contract.

(End of clause)

9 52.203-9 reserved
(Reference)

10 52.203-10 PRICE OR FEE ADJUSTMENT FOR ILLEGAL OR IMPROPER ACTIVITY
(JAN 1997)

(a) The Government, at its election, may reduce the price of a fixed-price type contract and the total cost and fee under a cost-type contract by the amount of profit or fee determined as set forth in paragraph (b) of this clause if the head of the contracting activity or designee determines that there was a violation of subsection 27 (a), (b), or (c) of the Office of Federal Procurement Policy Act, as amended (41 U.S.C. 423), as implemented in section 3.104 of the Federal Acquisition Regulation.

(b) The price or fee reduction referred to in paragraph (a) of this clause shall be--

(1) For cost-plus-fixed-fee contracts, the amount of the fee specified in the contract at the time of award;

(2) For cost-plus-incentive-fee contracts, the target fee specified in the contract at the time of award, notwithstanding any minimum fee or "fee floor" specified in the contract;

(3) For cost-plus-award-fee contracts--

(i) The base fee established in the contract at the time of contract award;

(ii) If no base fee is specified in the contract, 30 percent of the amount of each award fee otherwise payable to the Contractor for each award fee evaluation period or at each award fee determination point.

(4) For fixed-price-incentive contracts, the Government may--

(i) Reduce the contract target price and contract target profit both by an amount equal to the initial target profit specified in the contract at the time of contract award; or

(ii) If an immediate adjustment to the contract target price and contract target profit would have a significant adverse impact on the incentive price revision relationship under the contract, or adversely affect the contract financing provisions, the Contracting Officer may defer such adjustment until establishment of the total final price of the contract. The total final price established in accordance with the incentive price revision provisions of the contract shall be reduced by an amount equal to the initial target profit specified in the contract at the time of contract award and such reduced price shall be the total final contract price.

(5) For firm-fixed-price contracts, by 10 percent of the initial contract price or a profit amount determined by the Contracting Officer from records or documents in existence prior to the date of the contract award.

(c) The Government may, at its election, reduce a prime contractor's price or fee in accordance with the procedures of paragraph (b) of this clause for violations of the Act by its subcontractors by an amount not to exceed the amount of profit or fee reflected in the subcontract at the time the subcontract was first definitively priced.

(d) In addition to the remedies in paragraphs (a) and (c) of this clause, the Government may terminate this contract for default. The rights and remedies of the Government specified herein are not exclusive, and are in addition to any other rights and remedies provided by law or under this contract.

(End of clause)

11 52.203-12 LIMITATION ON PAYMENTS TO INFLUENCE CERTAIN FEDERAL TRANSACTIONS (JUN 1997)

(a) Definitions.

"Agency," as used in this clause, means executive agency as defined in 2.101.

"Covered Federal action," as used in this clause, means any of the following Federal actions:

(1) The awarding of any Federal contract.

(2) The making of any Federal grant.

(3) The making of any Federal loan.

(4) The entering into of any cooperative agreement.

(5) The extension, continuation, renewal, amendment, or modification of any Federal contract, grant, loan, or cooperative agreement.

"Indian tribe" and "tribal organization," as used in this clause, have the meaning provided in section 4 of the Indian Self-Determination and Education Assistance Act (25 U.S.C. 450B) and include Alaskan Natives.

"Influencing or attempting to influence," as used in this clause, means making, with the intent to influence, any communication to or appearance before an officer or employee of any agency, a Member of Congress, an officer or employee of Congress, or an employee of a Member of Congress in connection with any covered Federal action.

"Local government," as used in this clause, means a unit of government in a State and, if chartered, established, or otherwise recognized by a State for the performance of a governmental duty, including a local public authority, a special district, an intrastate district, a council of governments, a sponsor group representative organization, and any other instrumentality of a local government.

"Officer or employee of an agency," as used in this clause, includes the following individuals who are employed by an agency:

(1) An individual who is appointed to a position in the Government under title 5, United States Code, including a position under a temporary appointment.

(2) A member of the uniformed services, as defined in subsection 101(3), title 37, United States Code.

(3) A special Government employee, as defined in section 202, title 18, United States Code.

(4) An individual who is a member of a Federal advisory committee, as defined by the Federal Advisory Committee Act, title 5, United States Code, appendix 2.

"Person," as used in this clause, means an individual, corporation, company, association, authority, firm, partnership, society, State, and local government, regardless of whether such entity is operated for profit, or not for profit. This term excludes an Indian tribe, tribal organization, or any other Indian organization with respect to expenditures specifically permitted by other Federal law.

"Reasonable compensation," as used in this clause, means, with respect to a regularly employed officer or employee of any person, compensation that is consistent with the normal compensation for such officer or employee for work that is not furnished to, not funded by, or not furnished in cooperation with the Federal Government.

"Reasonable payment," as used in this clause, means, with respect to professional and other technical services, a payment in an amount that is consistent with the amount normally paid for such services in the private sector.

"Recipient," as used in this clause, includes the Contractor and all subcontractors. This term excludes an Indian tribe, tribal organization, or any other Indian organization with respect to expenditures specifically

permitted by other Federal law.

"Regularly employed," as used in this clause, means, with respect to an officer or employee of a person requesting or receiving a Federal contract, an officer or employee who is employed by such person for at least 130 working days within 1 year immediately preceding the date of the submission that initiates agency consideration of such person for receipt of such contract. An officer or employee who is employed by such person for less than 130 working days within 1 year immediately preceding the date of the submission that initiates agency consideration of such person shall be considered to be regularly employed as soon as he or she is employed by such person for 130 working days.

"State," as used in this clause, means a State of the United States, the District of Columbia, the Commonwealth of Puerto Rico, a territory or possession of the United States, an agency or instrumentality of a State, and multi-State, regional, or interstate entity having governmental duties and powers.

(b) Prohibitions.

(1) Section 1352 of title 31, United States Code, among other things, prohibits a recipient of a Federal contract, grant, loan, or cooperative agreement from using appropriated funds to pay any person for influencing or attempting to influence an officer or employee of any agency, a Member of Congress, an officer or employee of Congress, or an employee of a Member of Congress in connection with any of the following covered Federal actions: the awarding of any Federal contract; the making of any Federal grant; the making of any Federal loan; the entering into of any cooperative agreement; or the modification of any Federal contract, grant, loan, or cooperative agreement.

(2) The Act also requires Contractors to furnish a disclosure if any funds other than Federal appropriated funds (including profit or fee received under a covered Federal transaction) have been paid, or will be paid, to any person for influencing or attempting to influence an officer or employee of any agency, a Member of Congress, an officer or employee of Congress, or an employee of a Member of Congress in connection with a Federal contract, grant, loan, or cooperative agreement.

(3) The prohibitions of the Act do not apply under the following conditions:

(i) Agency and legislative liaison by own employees.

(A) The prohibition on the use of appropriated funds, in subparagraph (b)(1) of this clause, does not apply in the case of a payment of reasonable compensation made to an officer or employee of a person requesting or receiving a covered Federal action if the payment is for agency and legislative liaison activities not directly related to a covered Federal action.

(B) For purposes of subdivision (b)(3)(i)(A) of this clause, providing any information specifically requested by an agency or Congress is permitted at any time.

(C) The following agency and legislative liaison activities are permitted at any time where they are not related to a specific solicitation for any covered Federal action:

(1) Discussing with an agency the qualities and characteristics (including individual demonstrations) of the person's products or services, conditions or terms of sale, and service capabilities.

(2) Technical discussions and other activities regarding the application or adaptation of the person's products or services for an agency's use.

(D) The following agency and legislative liaison activities are permitted where they are prior to formal solicitation of any covered Federal action--

(1) Providing any information not specifically requested but necessary for an agency to make an informed decision about initiation of a covered Federal action;

(2) Technical discussions regarding the preparation of an unsolicited proposal prior to its official submission; and

(3) Capability presentations by persons seeking awards from an agency pursuant to the provisions of the Small Business Act, as amended by Pub. L. 95-507, and subsequent amendments.

(E) Only those services expressly authorized by subdivision (b)(3)(i)(A) of this clause are permitted under this clause.

(ii) Professional and technical services.

(A) The prohibition on the use of appropriated funds, in subparagraph (b)(1) of this clause, does not apply in the case of--

(1) A payment of reasonable compensation made to an officer or employee of a person requesting or receiving a covered Federal action or an extension, continuation, renewal, amendment, or modification of a covered Federal action, if payment is for professional or technical services rendered directly in the preparation, submission, or negotiation of any bid, proposal, or application for that Federal action or for meeting requirements imposed by or pursuant to law as a condition for receiving that Federal action.

(2) Any reasonable payment to a person, other than an officer or employee of a person requesting or receiving a covered Federal action or an extension, continuation, renewal, amendment, or modification of a covered Federal action if the payment is for professional or technical services rendered directly in the preparation, submission, or negotiation of any bid, proposal, or application for that Federal action or for meeting requirements imposed by or pursuant to law as a condition for receiving that Federal action. Persons other than officers or employees of a person requesting or receiving a covered Federal action include consultants and trade associations.

(B) For purposes of subdivision (b)(3)(ii)(A) of this clause, "professional and technical services" shall be limited to advice and analysis directly applying any professional or technical discipline. For example, drafting of a legal document accompanying a bid or proposal by a lawyer is allowable. Similarly, technical advice provided by an engineer on the performance or operational capability of a piece of equipment rendered directly in the negotiation of a contract is allowable. However, communications with the intent to influence made by a professional (such as a licensed lawyer) or a technical person (such as a licensed accountant) are not allowable under this section unless they provide advice and analysis directly applying their professional or technical expertise and unless the advice or analysis is rendered directly and solely in the preparation, submission or negotiation of a covered Federal action. Thus, for example, communications with the intent to influence made by a lawyer that do not provide legal advice or analysis directly and solely related to the legal aspects of his or her client's proposal, but generally advocate one proposal over another are not allowable under this section because the lawyer is not providing professional legal services. Similarly, communications with the intent to influence made by an engineer providing an engineering analysis prior to the preparation or submission of a bid or proposal are not allowable under this section since the engineer is providing technical services but not directly in the preparation, submission or negotiation of a covered Federal action.

(C) Requirements imposed by or pursuant to law as a condition for receiving a covered Federal award include those required by law or regulation and any other requirements in the actual award documents.

(D) Only those services expressly authorized by subdivisions (b)(3)(ii)(A)(1) and (2) of this clause are permitted under this clause.

(E) The reporting requirements of FAR 3.803(a) shall not apply with respect to payments of reasonable compensation made to regularly employed officers or employees of a person.

(c) Disclosure.

(1) The Contractor who requests or receives from an agency a Federal contract shall file with that agency a disclosure form, OMB standard form LLL, Disclosure of Lobbying Activities, if such person has made or has agreed to make any payment using nonappropriated funds (to include profits from any covered Federal action), which would be prohibited under subparagraph (b)(1) of this clause, if paid for with appropriated funds.

(2) The Contractor shall file a disclosure form at the end of each calendar quarter in which there occurs any event that materially affects the accuracy of the information contained in any disclosure form previously filed by such person under subparagraph (c)(1) of this clause. An event that materially affects the accuracy of the information reported includes--

(i) A cumulative increase of $25,000 or more in the amount paid or expected to be paid for influencing or attempting to influence a covered Federal action; or

(ii) A change in the person(s) or individual(s) influencing or

attempting to influence a covered Federal action; or
(iii) A change in the officer(s), employee(s), or Member(s) contacted to influence or attempt to influence a covered Federal action.
(3) The Contractor shall require the submittal of a certification, and if required, a disclosure form by any person who requests or receives any subcontract exceeding $100,000 under the Federal contract.
(4) All subcontractor disclosure forms (but not certifications) shall be forwarded from tier to tier until received by the prime Contractor. The prime Contractor shall submit all disclosures to the Contracting Officer at the end of the calendar quarter in which the disclosure form is submitted by the subcontractor. Each subcontractor certification shall be retained in the subcontract file of the awarding Contractor.
(d) Agreement. The Contractor agrees not to make any payment prohibited by this clause.
(e) Penalties.
(1) Any person who makes an expenditure prohibited under paragraph (a) of this clause or who fails to file or amend the disclosure form to be filed or amended by paragraph (b) of this clause shall be subject to civil penalties as provided for by 31 U.S.C. 1352. An imposition of a civil penalty does not prevent the Government from seeking any other remedy that may be applicable.
(2) Contractors may rely without liability on the representation made by their subcontractors in the certification and disclosure form.
(f) Cost allowability. Nothing in this clause makes allowable or reasonable any costs which would otherwise be unallowable or unreasonable. Conversely, costs made specifically unallowable by the requirements in this clause will not be made allowable under any other provision.

(End of clause)

12 52.203-7001 SPECIAL PROHIBITION ON EMPLOYMENT (JUN 1997)

(a) Definitions.
As used in this clause--
(1) "Arising out of a contract with the DoD" means any act in connection with--
(i) Attempting to obtain,
(ii) Obtaining, or
(iii) Performing a contract or first-tier subcontract of any agency, department, or component of the Department of Defense (DoD).
(2) "Conviction of fraud or any other felony" means any conviction for fraud or a felony in violation of state or Federal criminal statutes, whether entered on a verdict or plea, including a plea of nolo contendere, for which sentence has been imposed.
(3) "Date of conviction" means the date judgment was entered against the individual.
(b) 10 U.S.C. 2408 provides that any individual who is convicted after September 29, 1988, of fraud or any other felony arising out of a contract with the DoD is prohibited from:
(1) Working in a management or supervisory capacity on any DoD contract or first-tier subcontract;
(2) Serving on the board of directors of any DoD Contractor or first-tier subcontractor; or
(3) Serving as a consultant to any DoD Contractor or first-tier subcontractor.
(c) Unless waived, the prohibition in paragraph (b) applies for five years from the date of conviction.
(d) 10 U.S.C. 2408 further provides that a defense Contractor or first-tier subcontractor shall be subject to a criminal penalty of not more than $500,000 if convicted of knowingly--
(1) Employing a person under a prohibition specified in paragraph (b) of this clause; or
(2) Allowing such a person to serve on the board of directors of the Contractor or first-tier subcontractor.
(e) In addition to the criminal penalties contained in 10 U.S.C. 2408, the Government may consider other available remedies, such as--
(1) Suspension or debarment;
(2) Cancellation of the contract at no cost to the Government; or
(3) Termination of the contract for default.

(f) The Contractor may submit written requests for waiver of the prohibitions in paragraph (b) of this clause to the Contracting Officer. Requests shall clearly identify--

(1) The person involved;

(2) The nature of the conviction and resultant sentence or punishment imposed;

(3) The reasons for the requested waiver; and,

(4) An explanation of why a waiver is in the interest of national security.

(g) The Contractor agrees to include the substance of this clause, appropriately modified to reflect the identity and relationship of the parties, in all first-tier subcontracts exceeding the simplified acquisition threshold in Part 2 of the Federal Acquisition Regulation, except those for commercial items or components.

(h) Pursuant to 10 U.S.C. 2408(c), defense contractors and subcontractors may obtain information as to whether a particular person has been convicted of fraud or any other felony arising out of a contract with the DoD by contacting The Office of Justice Programs, The Denial of Benefits Office, U.S. Department of Justice, telephone (202) 616-3507.

(End of clause)

13 52.203-7002 DISPLAY OF DOD HOTLINE POSTER (DEC 1991)

(a) The Contractor shall display prominently in common work areas within business segments performing work under Department of Defense (DoD) contracts, DoD Hotline Posters prepared by the DoD Office of the Inspector General.

(b) DoD Hotline Posters may be obtained from the DoD Inspector General, ATTN: Defense Hotline, 400 Army Navy Drive, Washington, DC 22202-2884.

(c) The Contractor need not comply with paragraph (a) of this clause if it has established a mechanism, such as a hotline, by which employees may report suspected instances of improper conduct, and instructions that encourage employees to make such reports.

(End of clause)

14 52.204-4 PRINTING/COPYING DOUBLE-SIDED ON RECYCLED PAPER (JUN 1996)

(a) In accordance with Executive Order 12873, dated October 20, 1993, as amended by Executive Order 12995, dated March 25, 1996, the Offeror/Contractor is encouraged to submit paper documents, such as offers, letters, or reports, that are printed/copied double-sided on recycled paper that has at least 20 percent postconsumer material.

(b) The 20 percent standard applies to high-speed copier paper, offset paper, forms bond, computer printout paper, carbonless paper, file folders, white woven envelopes, and other uncoated printed and writing paper, such as writing and office paper, book paper, cotton fiber paper, and cover stock. An alternative to meeting the 20 percent postconsumer material standard is 50 percent recovered material content of certain industrial by-products.

(End of clause)

15 52.204-7003 CONTROL OF GOVERNMENT PERSONNEL WORK PRODUCT (APR 1992)

The Contractor's procedures for protecting against unauthorized disclosure of information shall not require Department of Defense employees or members of the Armed Forces to relinquish control of their work products, whether classified or not, to the Contractor.

(End of clause)

16 52.209-6 PROTECTING THE GOVERNMENT'S INTEREST WHEN SUBCONTRACTING WITH CONTRACTORS DEBARRED, SUSPENDED, OR PROPOSED FOR DEBARMENT (JUL 1995)

(a) The Government suspends or debars Contractors to protect the Government's interest. The Contractor shall not enter into any subcontract in excess of $25,000 with a Contractor that is debarred, suspended, or proposed for debarment unless there is a compelling reason to

do so.

(b) The Contractor shall require each proposed first-tier subcontractor, whose subcontract will exceed $25,000, to disclose to the Contractor, in writing, whether as of the time of award of the subcontract, the subcontractor, or its principals, is or is not debarred, suspended, or proposed for debarment by the Federal Government.

(c) A corporate officer or a designee of the Contractor shall notify the Contracting Officer, in writing, before entering into a subcontract with a party that is debarred, suspended, or proposed for debarment (see FAR 9.404 for information on the List of Parties Excluded from Federal Procurement and Nonprocurement Programs). The notice must include the following:

(1) The name of the subcontractor.

(2) The Contractor's knowledge of the reasons for the subcontractor being on the List of Parties Excluded from Federal Procurement and Nonprocurement Programs.

(3) The compelling reason(s) for doing business with the subcontractor notwithstanding its inclusion on the List of Parties Excluded from Federal Procurement and Nonprocurement Programs.

(4) The systems and procedures the Contractor has established to ensure that it is fully protecting the Government's interests when dealing with such subcontractor in view of the specific basis for the party's debarment, suspension, or proposed debarment.

(End of clause)

17 52.209-7004 SUBCONTRACTING WITH FIRMS THAT ARE OWNED OR CONTROLLED BY THE GOVERNMENT OF A TERRORIST COUNTRY (MAR 1998)

(a) Unless the Government determines that there is a compelling reason to do so, the Contractor shall not enter into any subcontract in excess of $25,000 with a firm, or a subsidiary of a firm, that is identified, on the List of Parties Excluded from Federal Procurement and Nonprocurement Programs, as being ineligible for the award of Defense contracts or subcontracts because it is owned or controlled by the government of a terrorist country.

(b) A corporate officer or a designee of the Contractor shall notify the Contracting Officer, in writing, before entering into a subcontract with a party that is identified, on the List of Parties Excluded from Federal Procurement and Nonprocurement Programs, as being ineligible for the award of Defense contracts or subcontracts because it is owned or controlled by the government of a terrorist country. The notice must include the name of the proposed subcontractor and the compelling reason(s) for doing business with the subcontractor notwithstanding its inclusion on the List of Parties Excluded From Federal Procurement and Nonprocurement Programs.

(End of clause)

18 52.214-26 AUDIT AND RECORDS--SEALED BIDDING (OCT 1997)

(a) As used in this clause, records includes books, documents, accounting procedures and practices, and other data, regardless of type and regardless of whether such items are in written form, in the form of computer data, or in any other form.

(b) Cost or pricing data. If the Contractor has been required to submit cost or pricing data in connection with the pricing of any modification to this contract, the Contracting Officer, or an authorized representative of the Contracting Officer, in order to evaluate the accuracy, completeness, and currency of the cost or pricing data, shall have the right to examine and audit all of the Contractor's records, including computations and projections, related to--

(1) The proposal for the modification;

(2) The discussions conducted on the proposal(s), including those related to negotiating;

(3) Pricing of the modification; or

(4) Performance of the modification.

(c) Comptroller General. In the case of pricing any modification, the Comptroller General of the United States, or an authorized representative, shall have the same rights as specified in paragraph (b) of this clause.

(d) Availability. The Contractor shall make available at its office at all reasonable times the materials described in reproduction, until 3 years after final payment under this contract, or for any other period specified in Subpart 4.7 of the Federal Acquisition Regulation (FAR). FAR Subpart 4.7, Contractor Records Retention, in effect on the data of this contract, is incorporated by reference in its entirety and made a part of this contract.

(1) If this contract is completely or partially terminated, the records relating to the work terminated shall be made available for 3 years after any resulting final termination settlement.

(2) Records pertaining to appeals under the Disputes clause or to litigation or the settlement of claims arising under or relating to the performance of this contract shall be made available until disposition of such appeals, litigation, or claims.

(e) The Contractor shall insert a clause containing all the provisions of this clause, including this paragraph (e), in all subcontracts expected to exceed the threshold in FAR 15.403-4(a)(1) for submission of cost or pricing data.

(End of clause)

19 52.214-27 PRICE REDUCTION FOR DEFECTIVE COST OR PRICING DATA—MODIFICATIONS--SEALED BIDDING (OCT 1997)

(a) This clause shall become operative only for any modification to this contract involving aggregate increases and/or decreases in costs, plus applicable profits, expected to exceed the threshold for the submission of cost or pricing data at FAR 15.403-4(a)(1), except that this clause does not apply to a modification if an exception under FAR 15.403-1(b) applies.

(b) If any price, including profit, negotiated in connection with any modification under this clause, was increased by any significant amount because (1) the Contractor or a subcontractor furnished cost or pricing data that were not complete, accurate, and current as certified in its Certificate of Current Cost or Pricing Data, (2) a subcontractor or prospective subcontractor furnished the Contractor cost or pricing data that were not complete, accurate, and current as certified in the Contractor's Certificate of Current Cost or Pricing Data, or (3) any of these parties furnished data of any description that were not accurate, the price shall be reduced accordingly and the contract shall be modified to reflect the reduction. This right to a price reduction is limited to that resulting from defects in data relating to modifications for which this clause becomes operative under paragraph (a) above.

(c) Any reduction in the contract price under paragraph (b) above due to defective data from a prospective subcontractor that was not subsequently awarded the subcontract shall be limited to the amount, plus applicable overhead and profit markup, by which (1) the actual subcontract or (2) the actual cost to the Contractor, if there was no subcontract, was less than the prospective subcontract cost estimate submitted by the Contractor; provided, that the actual subcontract price was not itself affected by defective cost or pricing data.

(d)(1) If the Contracting Officer determines under paragraph (b) of this clause that a price or cost reduction should be made, the Contractor agrees not to raise the following matters as a defense:

(i) The Contractor or subcontractor was a sole source supplier or otherwise was in a superior bargaining position and thus the price of the contract would not have been modified even if accurate, complete, and current cost or pricing data had been submitted.

(ii) The Contracting Officer should have known that the cost or pricing data in issue were defective even though the Contractor or subcontractor took no affirmative action to bring the character of the data to the attention of the Contracting Officer.

(iii) The contract was based on an agreement about the total cost of the contract and there was no agreement about the cost of each item procured under the contract.

(iv) The Contractor or subcontractor did not submit a Certificate of Current Cost or Pricing Data.

(2)(i) Except as prohibited by subdivision (d)(2)(ii) of this clause, an offset in an amount determined appropriate by the Contracting Officer based upon the facts shall be allowed against the amount of a contract price reduction if--

(A) The Contractor certifies to the Contracting Officer that, to

the best of the Contractor's knowledge and belief, the Contractor is entitled to the offset in the amount requested; and

(B) The Contractor proves that the cost or pricing data were available before the date of agreement on the price of the contract (or price of the modification) and that the data were not submitted before such date.

(ii) An offset shall not be allowed if--

(A) The understated data was known by the Contractor to be understated when the Certificate of Current Cost or Pricing Data was signed; or

(B) The Government proves that the facts demonstrate that the contract price would not have increased in the amount to be offset even if the available data had been submitted before the date of agreement on price.

(e) If any reduction in the contract price under this clause reduces the price of items for which payment was made prior to the date of the modification reflecting the price reduction, the Contractor shall be liable to and shall pay the United States at the time such overpayment is repaid--

(1) Simple interest on the amount of such overpayment to be computed from the date(s) of overpayment to the Contractor to the date the Government is repaid by the Contractor at the applicable underpayment rate effective for each quarter prescribed by the Secretary of the Treasury under 26 U.S.C. 6621(a)(2); and

(2) A penalty equal to the amount of the overpayment, if the Contractor or subcontractor knowingly submitted cost or pricing data which were incomplete, inaccurate, or noncurrent.

(End of clause)

20 52.214-28 SUBCONTRACTOR COST OR PRICING DATA--MODIFICATIONS--SEALED BIDDING (OCT 1997)

(a) The requirements of paragraphs (b) and (c) of this clause shall (1) become operative only for any modification to this contract involving aggregate increases and/or decreases in costs, plus applicable profits, expected to exceed the threshold for submission of cost or pricing data at FAR 15.403-4(a)(1), and (2) be limited to such modifications.

(b) Before awarding any subcontract expected to exceed the threshold for submission of cost or pricing data at FAR 15.403-4(a)(1), on the date of agreement on price or the date of award, whichever is later; or before pricing any subcontract modifications involving aggregate increases and/or decreases in costs, plus applicable profits, expected to exceed the threshold for submission of cost or pricing data at FAR 15.403-4(a)(1), the Contractor shall require the subcontractor to submit cost or pricing data (actually or by specific identification in writing), unless an exception under FAR 15.403-1(b) applies.

(c) The Contractor shall require the subcontractor to certify in substantially the form prescribed in subsection FAR 15.406-2 that, to the best of its knowledge and belief, the data submitted under paragraph (b) of this clause were accurate, complete, and current as of the date of agreement on the negotiated price of the subcontract or subcontract modification.

(d) The Contractor shall insert the substance of this clause, including this paragraph (d), in each subcontract that, when entered into, exceeds the threshold for submission of cost or pricing data at FAR 15.403-4(a)(1).

(End of clause)

21 52.214-29 ORDER OF PRECEDENCE--SEALED BIDDING (JAN 1986)

Any inconsistency in this solicitation or contract shall be resolved by giving precedence in the following order: (a) the Schedule (excluding the specifications); (b) representations and other instructions; (c) contract clauses; (d) other documents, exhibits, and attachments; and (e) the specifications.

(End of clause)

22 52.219-8 UTILIZATION OF SMALL, SMALL DISADVANTAGED AND WOMEN-OWNED SMALL BUSINESS CONCERNS (JUN 1997)

(a) It is the policy of the United States that small business concerns, small business concerns owned and controlled by socially and economically disadvantaged individuals and small business concerns owned and controlled by women shall have the maximum practicable opportunity to participate in performing contracts let by any Federal agency, including contracts and subcontracts for subsystems, assemblies, components, and related services for major systems. It is further the policy of the United States that its prime contractors establish procedures to ensure the timely payment of amounts due pursuant to the terms of their subcontracts with small business concerns, small business concerns owned and controlled by socially and economically disadvantaged individuals and small business concerns owned and controlled by women.

(b) The Contractor hereby agrees to carry out this policy in the awarding of subcontracts to the fullest extent consistent with efficient contract performance. The Contractor further agrees to cooperate in any studies or surveys as may be conducted by the United States Small Business Administration or the awarding agency of the United States as may be necessary to determine the extent of the Contractor's compliance with this clause.

(c) As used in this contract, the term "small business concern" shall mean a small business as defined pursuant to section 3 of the Small Business Act and relevant regulations promulgated pursuant thereto. The term "small business concern owned and controlled by socially and economically disadvantaged individuals" shall mean a small business concern (1) which is at least 51 percent unconditionally owned by one or more socially and economically disadvantaged individuals; or, in the case of any publicly owned business, at least 51 per centum of the stock of which is unconditionally owned by one or more socially and economically disadvantaged individuals; and (2) whose management and daily business operations are controlled by one or more of such individuals. This term also means a small business concern that is at least 51 percent unconditionally owned by an economically disadvantaged Indian tribe or Native Hawaiian Organization, or a publicly owned business having at least 51 percent of its stock unconditionally owned by one of these entities which has its management and daily business controlled by members of an economically disadvantaged Indian tribe or Native Hawaiian Organization, and which meets the requirements of 13 CFR 124. The Contractor shall presume that socially and economically disadvantaged individuals include Black Americans, Hispanic Americans, Native Americans, Asian-Pacific Americans, Subcontinent Asian Americans, and other minorities, or any other individual found to be disadvantaged by the Administration pursuant to section 8(a) of the Small Business Act. The Contractor shall presume that socially and economically disadvantaged entities also include Indian Tribes and Native Hawaiian Organizations.

(d) The term "small business concern owned and controlled by women" shall mean a small business concern (1) which is at least 51 percent owned by one or more women, or, in the case of any publicly owned business, at least 51 percent of the stock of which is owned by one or more women, and (2) whose management and daily business operations are controlled by one or more women; and

(e) Contractors acting in good faith may rely on written representations by their subcontractors regarding their status as a small business concern, a small business concern owned and controlled by socially and economically disadvantaged individuals or a small business concern owned and controlled by women.

(End of clause)

23 52.219-14 LIMITATIONS ON SUBCONTRACTING (DEC 1996)

(a) This clause does not apply to the unrestricted portion of a partial set-aside.

(b) By submission of an offer and execution of a contract, the Offeror/Contractor agrees that in performance of the contract in the case of a contract for--

(1) Services (except construction). At least 50 percent of the cost of contract performance incurred for personnel shall be expended for employees of the concern.

(2) Supplies (other than procurement from a nonmanufacturer of such supplies). The concern shall perform work for at least 50 percent of the cost of manufacturing the supplies, not including the cost of materials.

(3) General construction. The concern will perform at least 15 percent of the cost of the contract, not including the cost of materials, with its own employees.

(4) Construction by special trade contractors. The concern will perform at least 25 percent of the cost of the contract, not including the cost of materials, with its own employees.

(End of clause)

24 52.222-3 CONVICT LABOR (AUG 1996)

The Contractor agrees not to employ in the performance of this contract any person undergoing a sentence of imprisonment which has been imposed by any court of a State, the District of Columbia, the Commonwealth of Puerto Rico, the Virgin Islands, Guam, American Samoa, the Commonwealth of the Northern Mariana Islands, or the Trust Territory of the Pacific Islands. This limitation, however, shall not prohibit the employment by the Contractor in the performance of this contract of persons on parole or probation to work at paid employment during the term of their sentence or persons who have been pardoned or who have served their terms. Nor shall it prohibit the employment by the Contractor in the performance of this contract of persons confined for violation of the laws of any of the States, the District of Columbia, the Commonwealth of Puerto Rico, the Virgin Islands, Guam, American Samoa, the Commonwealth of the Northern Mariana Islands, or the Trust Territory of the Pacific Islands who are authorized to work at paid employment in the community under the laws of such jurisdiction, if--

(a)(1) The worker is paid or is in an approved work training program on a voluntary basis;

(2) Representatives of local union central bodies or similar labor union organizations have been consulted;

(3) Such paid employment will not result in the displacement of employed workers, or be applied in skills, crafts, or trades in which there is a surplus of available gainful labor in the locality, or impair existing contracts for services; and

(4) The rates of pay and other conditions of employment will not be less than those paid or provided for work of a similar nature in the locality in which the work is being performed; and

(b) The Attorney General of the United States has certified that the work-release laws or regulations of the jurisdiction involved are in conformity with the requirements of Executive Order 11755, as amended by Executive Orders 12608 and 12943.

(End of clause)

25 52.222-4 CONTRACT WORK HOURS AND SAFETY STANDARDS ACT--OVERTIME COMPENSATION (JUL 1995)

(a) Overtime requirements. No Contractor or subcontractor contracting for any part of the contract work which may require or involve the employment of laborers or mechanics (see Federal Acquisition Regulation (FAR) 22.300) shall require or permit any such laborers or mechanics in any workweek in which the individual is employed on such work to work in excess of 40 hours in such workweek unless such laborer or mechanic receives compensation at a rate not less than 1 1/2 times the basic rate of pay for all hours worked in excess of 40 hours in such workweek.

(b) Violation; liability for unpaid wages; liquidated damages. In the event of any violation of the provisions set forth in paragraph (a) of this clause, the Contractor and any subcontractor responsible therefor shall be liable for the unpaid wages. In addition, such Contractor and subcontractor shall be liable to the United States (in the case of work done under contract for the District of Columbia or a territory, to such District or to such territory), for liquidated damages. Such liquidated damages shall be computed with respect to each individual laborer or mechanic employed in violation of the provisions set forth in paragraph (a) of this clause in the sum of $10 for each calendar day on which such individual was required or permitted to work in excess of the standard workweek of 40 hours without payment of the overtime wages required by

provisions set forth in paragraph (a) of this clause.

(c) Withholding for unpaid wages and liquidated damages. The Contracting Officer shall upon his or her own action or upon written request of an authorized representative of the Department of Labor withhold or cause to be withheld, from any moneys payable on account of work performed by the Contractor or subcontractor under any such contract or any other Federal contract with the same Prime Contractor, or any other Federally-assisted contract subject to the Contract Work Hours and Safety Standards Act which is held by the same Prime Contractor, such sums as may be determined to be necessary to satisfy any liabilities of such Contractor or subcontractor for unpaid wages and liquidated damages as provided in the provisions set forth in paragraph (b) of this clause.

(d) Payrolls and basic records. (1) The Contractor or subcontractor shall maintain payrolls and basic payroll records during the course of contract work and shall preserve them for a period of 3 years from the completion of the contract for all laborers and mechanics working on the contract. Such records shall contain the name and address of each such employee, social security number, correct classifications, hourly rates of wages paid, daily and weekly number of hours worked, deductions made, and actual wages paid. Nothing in this paragraph shall require the duplication of records required to be maintained for construction work by Department of Labor regulations at 29 CFR 5.5(a)(3) implementing the Davis-Bacon Act.

(2) The records to be maintained under paragraph (d)(1) of this clause shall be made available by the Contractor or subcontractor for inspection, copying, or transcription by authorized representatives of the Contracting Officer or the Department of Labor. The Contractor or subcontractor shall permit such representatives to interview employees during working hours on the job.

(e) Subcontracts. The Contractor or subcontractor shall insert in any subcontracts exceeding $100,000, the provisions set forth in paragraphs (a) through (e) of this clause and also a clause requiring the subcontractors to include these provisions in any lower tier subcontracts. The Prime Contractor shall be responsible for compliance by any subcontractor or lower tier subcontractor with the provisions set forth in paragraphs (a) through (e) of this clause.

(End of clause)

26 52.222-6 DAVIS-BACON ACT (FEB 1995)

(a) All laborers and mechanics employed or working upon the site of the work will be paid unconditionally and not less often than once a week, and without subsequent deduction or rebate on any account (except such payroll deductions as are permitted by regulations issued by the Secretary of Labor under the Copeland Act (29 CFR Part 3)), the full amount of wages and bona fide fringe benefits (or cash equivalents thereof) due at time of payment computed at rates not less than those contained in the wage determination of the Secretary of Labor which is attached hereto and made a part hereof, regardless of any contractual relationship which may be alleged to exist between the Contractor and such laborers and mechanics. Contributions made or costs reasonably anticipated for bona fide fringe benefits under section 1(b)(2) of the Davis-Bacon Act on behalf of laborers or mechanics are considered wages paid to such laborers or mechanics, subject to the provisions of paragraph (d) of this clause; also, regular contributions made or costs incurred for more than a weekly period (but not less often than quarterly) under plans, funds, or programs which cover the particular weekly period, are deemed to be constructively made or incurred during such period. Such laborers and mechanics shall be paid not less than the appropriate wage rate and fringe benefits in the wage determination for the classification of work actually performed, without regard to skill, except as provided in the clause entitled Apprentices and Trainees. Laborers or mechanics performing work in more than one classification may be compensated at the rate specified for each classification for the time actually worked therein; provided, that the employer's payroll records accurately set forth the time spent in each classification in which work is performed. The wage determination (including any additional classifications and wage rates conformed under paragraph (b) of this clause) and the Davis-Bacon poster (WH-1321) shall be posted at all times by the Contractor and its subcontractors at the site of the work in a prominent and accessible place where it can be easily seen by the workers.

(b)(1) The Contracting Officer shall require that any class of laborers

or mechanics which is not listed in the wage determination and which is to be employed under the contract shall be classified in conformance with the wage determination. The Contracting Officer shall approve an additional classification and wage rate and fringe benefits therefor only when all the following criteria have been met:

(i) The work to be performed by the classification requested is not performed by a classification in the wage determination.

(ii) The classification is utilized in the area by the construction industry.

(iii) The proposed wage rate, including any bona fide fringe benefits, bears a reasonable relationship to the wage rates contained in the wage determination.

(iv) With respect to helpers, such a classification prevails in the area in which the work is performed.

(2) If the Contractor and the laborers and mechanics to be employed in the classification (if known), or their representatives, and the Contracting Officer agree on the classification and wage rate (including the amount designated for fringe benefits, where appropriate), a report of the action taken shall be sent by the Contracting Officer to the Administrator of the Wage and Hour Division, Employment Standards Administration, U.S. Department of Labor, Washington, DC 20210. The Administrator or an authorized representative will approve, modify, or disapprove every additional classification action within 30 days of receipt and so advise the Contracting Officer or will notify the Contracting Officer within the 30-day period that additional time is necessary.

(3) In the event the Contractor, the laborers or mechanics to be employed in the classification, or their representatives, and the Contracting Officer do not agree on the proposed classification and wage rate (including the amount designated for fringe benefits, where appropriate), the Contracting Officer shall refer the questions, including the views of all interested parties and the recommendation of the Contracting Officer, to the Administrator of the Wage and Hour Division for determination. The Administrator, or an authorized representative, will issue a determination within 30 days of receipt and so advise the Contracting Officer or will notify the Contracting Officer within the 30-day period that additional time is necessary.

(4) The wage rate (including fringe benefits, where appropriate) determined pursuant to subparagraphs (b)(2) and (b)(3) of this clause shall be paid to all workers performing work in the classification under this contract from the first day on which work is performed in the classification.

(c) Whenever the minimum wage rate prescribed in the contract for a class of laborers or mechanics includes a fringe benefit which is not expressed as an hourly rate, the Contractor shall either pay the benefit as stated in the wage determination or shall pay another bona fide fringe benefit or an hourly cash equivalent thereof.

(d) If the Contractor does not make payments to a trustee or other third person, the Contractor may consider as part of the wages of any laborer or mechanic the amount of any costs reasonably anticipated in providing bona fide fringe benefits under a plan or program; provided, that the Secretary of Labor has found, upon the written request of the Contractor, that the applicable standards of the Davis-Bacon Act have been met. The Secretary of Labor may require the Contractor to set aside in a separate account assets for the meeting of obligations under the plan or program.

(End of clause)

27 52.222-7 WITHHOLDING OF FUNDS (FEB 1988)

The Contracting Officer shall, upon his or her own action or upon written request of an authorized representative of the Department of Labor, withhold or cause to be withheld from the Contractor under this contract or any other Federal contract with the same Prime Contractor, or any other Federally assisted contract subject to Davis-Bacon prevailing wage requirements, which is held by the same Prime Contractor, so much of the accrued payments or advances as may be considered necessary to pay laborers and mechanics, including apprentices, trainees, and helpers, employed by the Contractor or any subcontractor the full amount of wages required by the contract. In the event of failure to pay any laborer or mechanic, including any apprentice, trainee, or helper, employed or working on the

site of the work, all or part of the wages required by the contract, the Contracting Officer may, after written notice to the Contractor, take such action as may be necessary to cause the suspension of any further payment, advance, or guarantee of funds until such violations have ceased.

(End of clause)

28 52.222-8 PAYROLLS AND BASIC RECORDS (FEB 1988)

(a) Payrolls and basic records relating thereto shall be maintained by the Contractor during the course of the work and preserved for a period of 3 years thereafter for all laborers and mechanics working at the site of the work. Such records shall contain the name, address, and social security number of each such worker, his or her correct classification, hourly rates of wages paid (including rates of contributions or costs anticipated for bona fide fringe benefits or cash equivalents thereof of the types described in section 1(b)(2)(B) of the Davis-Bacon Act), daily and weekly number of hours worked, deductions made, and actual wages paid. Whenever the Secretary of Labor has found, under paragraph (d) of the clause entitled Davis-Bacon Act, that the wages of any laborer or mechanic include the amount of any costs reasonably anticipated in providing benefits under a plan or program described in section 1(b)(2)(B) of the Davis-Bacon Act, the Contractor shall maintain records which show that the commitment to provide such benefits is enforceable, that the plan or program is financially responsible, and that the plan or program has been communicated in writing to the laborers or mechanics affected, and records which show the costs anticipated or the actual cost incurred in providing such benefits. Contractors employing apprentices or trainees under approved programs shall maintain written evidence of the registration of apprenticeship programs and certification of trainee programs, the registration of apprentices and trainees, and the ratios and wage rates prescribed in the applicable programs.

(b)(1) The Contractor shall submit weekly for each week in which any contract work is performed a copy of all payrolls to the Contracting Officer. The payrolls submitted shall set out accurately and completely all of the information required to be maintained under paragraph (a) of this clause. This information may be submitted in any form desired. Optional Form WH-347 (Federal Stock Number 029-005-00014-1) is available for this purpose and may be purchased from the Superintendent of Documents, U.S. Government Printing Office, Washington, DC 20402. The Prime Contractor is responsible for the submission of copies of payrolls by all subcontractors.

(2) Each payroll submitted shall be accompanied by a "Statement of Compliance," signed by the Contractor or subcontractor or his or her agent who pays or supervises the payment of the persons employed under the contract and shall certify--

(i) That the payroll for the payroll period contains the information required to be maintained under paragraph (a) of this clause and that such information is correct and complete;

(ii) That each laborer or mechanic (including each helper, apprentice, and trainee) employed on the contract during the payroll period has been paid the full weekly wages earned, without rebate, either directly or indirectly, and that no deductions have been made either directly or indirectly from the full wages earned, other than permissible deductions as set forth in the Regulations, 29 CFR Part 3; and

(iii) That each laborer or mechanic has been paid not less than the applicable wage rates and fringe benefits or cash equivalents for the classification of work performed, as specified in the applicable wage determination incorporated into the contract.

(3) The weekly submission of a properly executed certification set forth on the reverse side of Optional Form WH-347 shall satisfy the requirement for submission of the "Statement of Compliance" required by subparagraph (b)(2) of this clause.

(4) The falsification of any of the certifications in this clause may subject the Contractor or subcontractor to civil or criminal prosecution under Section 1001 of Title 18 and Section 3729 of Title 31 of the United States Code.

(c) The Contractor or subcontractor shall make the records required under paragraph (a) of this clause available for inspection, copying, or transcription by the Contracting Officer or authorized representatives of

the Contracting Officer or the Department of Labor. The Contractor or subcontractor shall permit the Contracting Officer or representatives of the Contracting Officer or the Department of Labor to interview employees during working hours on the job. If the Contractor or subcontractor fails to submit required records or to make them available, the Contracting Officer may, after written notice to the Contractor, take such action as may be necessary to cause the suspension of any further payment. Furthermore, failure to submit the required records upon request or to make such records available may be grounds for debarment action pursuant to 29 CFR 5.12.

(End of clause)

29 52.222-9 APPRENTICES AND TRAINEES (FEB 1988)

(a) Apprentices. Apprentices will be permitted to work at less than the predetermined rate for the work they performed when they are employed pursuant to and individually registered in a bona fide apprenticeship program registered with the U.S. Department of Labor, Employment and Training Administration, Bureau of Apprenticeship and Training, or with a State Apprenticeship Agency recognized by the Bureau, or if a person is employed in his or her first 90 days of probationary employment as an apprentice in such an apprenticeship program, who is not individually registered in the program, but who has been certified by the Bureau of Apprenticeship and Training or a State Apprenticeship Agency (where appropriate) to be eligible for probationary employment as an apprentice. The allowable ratio of apprentices to journeymen on the job site in any craft classification shall not be greater than the ratio permitted to the Contractor as to the entire work force under the registered program. Any worker listed on a payroll at an apprentice wage rate, who is not registered or otherwise employed as stated in this paragraph, shall be paid not less than the applicable wage determination for the classification of work actually performed. In addition, any apprentice performing work on the job site in excess of the ratio permitted under the registered program shall be paid not less than the applicable wage rate on the wage determination for the work actually performed. Where a contractor is performing construction on a project in a locality other than that in which its program is registered, the ratios and wage rates (expressed in percentages of the journeyman's hourly rate) specified in the Contractor's or subcontractor's registered program shall be observed. Every apprentice must be paid at not less than the rate specified in the registered program for the apprentice's level of progress, expressed as a percentage of the journeyman hourly rate specified in the applicable wage determination. Apprentices shall be paid fringe benefits in accordance with the provisions of the apprenticeship program. If the apprenticeship program does not specify fringe benefits, apprentices must be paid the full amount of fringe benefits listed on the wage determination for the applicable classification. If the Administrator determines that a different practice prevails for the applicable apprentice classification, fringes shall be paid in accordance with that determination. In the event the Bureau of Apprenticeship and Training, or a State Apprenticeship Agency recognized by the Bureau, withdraws approval of an apprenticeship program, the Contractor will no longer be permitted to utilize apprentices at less than the applicable predetermined rate for the work performed until an acceptable program is approved.

(b) Trainees. Except as provided in 29 CFR 5.16, trainees will not be permitted to work at less than the predetermined rate for the work performed unless they are employed pursuant to and individually registered in a program which has received prior approval, evidenced by formal certification by the U.S. Department of Labor, Employment and Training Administration. The ratio of trainees to journeymen on the job site shall not be greater than permitted under the plan approved by the Employment and Training Administration. Every trainee must be paid at not less than the rate specified in the approved program for the trainee's level of progress, expressed as a percentage of the journeyman hourly rate specified in the applicable wage determination. Trainees shall be paid fringe benefits in accordance with the provisions of the trainee program. If the trainee program does not mention fringe benefits, trainees shall be paid the full amount of fringe benefits listed in the wage determination unless the Administrator of the Wage and Hour Division determines that there is an apprenticeship program associated with the corresponding journeyman wage

rate in the wage determination which provides for less than full fringe benefits for apprentices. Any employee listed on the payroll at a trainee rate who is not registered and participating in a training plan approved by the Employment and Training Administration shall be paid not less than the applicable wage rate in the wage determination for the classification of work actually performed. In addition, any trainee performing work on the job site in excess of the ratio permitted under the registered program shall be paid not less than the applicable wage rate in the wage determination for the work actually performed. In the event the Employment and Training Administration withdraws approval of a training program, the Contractor will no longer be permitted to utilize trainees at less than the applicable predetermined rate for the work performed until an acceptable program is approved.

(c) Equal employment opportunity. The utilization of apprentices, trainees, and journeymen under this clause shall be in conformity with the equal employment opportunity requirements of Executive Order 11246, as amended, and 29 CFR Part 30.

(End of clause)

30 52.222-10 COMPLIANCE WITH COPELAND ACT REQUIREMENTS (FEB 1988)

The Contractor shall comply with the requirements of 29 CFR Part 3, which are hereby incorporated by reference in this contract.

(End of clause)

31 52.222-11 SUBCONTRACTS (LABOR STANDARDS) (FEB 1988)

(a) The Contractor or subcontractor shall insert in any subcontracts the clauses entitled Davis-Bacon Act, Contract Work Hours and Safety Standards Act--Overtime Compensation, Apprentices and Trainees, Payrolls and Basic Records, Compliance with Copeland Act Requirements, Withholding of Funds, Subcontracts (Labor Standards), Contract Termination--Debarment, Disputes Concerning Labor Standards, Compliance with Davis-Bacon and Related Act Regulations, and Certification of Eligibility, and such other clauses as the Contracting Officer may, by appropriate instructions, require, and also a clause requiring subcontractors to include these clauses in any lower tier subcontracts. The Prime Contractor shall be responsible for compliance by any subcontractor or lower tier subcontractor with all the contract clauses cited in this paragraph.

(b)(1) Within 14 days after award of the contract, the Contractor shall deliver to the Contracting Officer a completed Statement and Acknowledgment Form (SF 1413) for each subcontract, including the subcontractor's signed and dated acknowledgment that the clauses set forth in paragraph (a) of this clause have been included in the subcontract.

(2) Within 14 days after the award of any subsequently awarded subcontract the Contractor shall deliver to the Contracting Officer an updated completed SF 1413 for such additional subcontract.

(End of clause)

32 52.222-12 CONTRACT TERMINATION--DEBARMENT (FEB 1988)

A breach of the contract clauses entitled Davis-Bacon Act, Contract Work Hours and Safety Standards Act--Overtime Compensation, Apprentices and Trainees, Payrolls and Basic Records, Compliance with Copeland Act Requirements, Subcontracts (Labor Standards), Compliance with Davis-Bacon and Related Act Regulations, or Certification of Eligibility may be grounds for termination of the contract, and for debarment as a Contractor and subcontractor as provided in 29 CFR 5.12.

(End of clause)

33 52.222-13 COMPLIANCE WITH DAVIS-BACON AND RELATED ACT REGULATIONS (FEB 1988)

All rulings and interpretations of the Davis-Bacon and Related Acts contained in 29 CFR Parts 1, 3, and 5 are hereby incorporated by reference in this contract.

(End of clause)

34 52.222-14 DISPUTES CONCERNING LABOR STANDARDS (FEB 1988)

The United States Department of Labor has set forth in 29 CFR Parts 5, 6, and 7 procedures for resolving disputes concerning labor standards requirements. Such disputes shall be resolved in accordance with those procedures and not the Disputes clause of this contract. Disputes within the meaning of this clause include disputes between the Contractor (or any of its subcontractors) and the contracting agency, the U.S. Department of Labor, or the employees of their representatives.

(End of clause)

35 52.222-15 CERTIFICATION OF ELIGIBILITY (FEB 1988)

(a) By entering into this contract, the Contractor certifies that neither it (nor he or she) nor any person or firm who has an interest in the Contractor's firm is a person or firm ineligible to be awarded Government contracts by virtue of section 3(a) of the Davis-Bacon Act or 29 CFR 5.12(a)(1).

(b) No part of this contract shall be subcontracted to any person or firm ineligible for award of a Government contract by virtue of section 3(a) of the Davis-Bacon Act or 29 CFR 5.12(a)(1).

(c) The penalty for making false statements is prescribed in the U.S. Criminal Code, 18 U.S.C. 1001.

(End of clause)

36 52.222-23 NOTICE OF REQUIREMENT FOR AFFIRMATIVE ACTION TO ENSURE EQUAL EMPLOYMENT OPPORTUNITY (APR 1984)

(a) The offeror's attention is called to the Equal Opportunity clause and the Affirmative Action Compliance Requirements for Construction clause of this solicitation.

(b) The goals for minority and female participation, expressed in percentage terms for the Contractor's aggregate workforce in each trade on all construction work in the covered area, are as follows:

Goals for minority participation for each trade	Goals for female participation for each trade
6.2%	6.9%

These goals are applicable to all the Contractor's construction work performed in the covered area. If the Contractor performs construction work in a geographical area located outside of the covered area, the Contractor shall apply the goals established for the geographical area where the work is actually performed. Goals are published periodically in the Federal Register in notice form, and these notices may be obtained from any Office of Federal Contract Compliance Programs office.

(c) The Contractor's compliance with Executive Order 11246, as amended, and the regulations in 41 CFR 60-4 shall be based on (1) its implementation of the Equal Opportunity clause, (2) specific affirmative action obligations required by the clause entitled "Affirmative Action Compliance Requirements for Construction," and (3) its efforts to meet the goals. The hours of minority and female employment and training must be substantially uniform throughout the length of the contract, and in each trade. The Contractor shall make a good faith effort to employ minorities and women evenly on each of its projects. The transfer of minority or female employees or trainees from Contractor to Contractor, or from project to project, for the sole purpose of meeting the Contractor's goals shall be a violation of the contract, Executive Order 11246, as amended, and the regulations in 41 CFR 60-4. Compliance with the goals will be measured against the total work hours performed.

(d) The Contractor shall provide written notification to the Director, Office of Federal Contract Compliance Programs, within 10 working days following award of any construction subcontract in excess of $10,000 at any tier for construction work under the contract resulting from this solicitation. The notification shall list the--

(1) Name, address, and telephone number of the subcontractor;

(2) Employer's identification number of the subcontractor;

(3) Estimated dollar amount of the subcontract;
(4) Estimated starting and completion dates of the subcontract; and
(5) Geographical area in which the subcontract is to be performed.
(e) As used in this Notice, and in any contract resulting from this solicitation, the "covered area" is Washington, Pierce, Tillicum.
(End of provision) (R 7-2003.14(d) 1978 SEP)

37 52.222-26 EQUAL OPPORTUNITY (APR 1984)

(a) If, during any 12-month period (including the 12 months preceding the award of this contract), the Contractor has been or is awarded nonexempt Federal contracts and/or subcontracts that have an aggregate value in excess of $10,000, the Contractor shall comply with subparagraphs (b)(1) through (11) below. Upon request, the Contractor shall provide information necessary to determine the applicability of this clause.
(b) During performing this contract, the Contractor agrees as follows:
(1) The Contractor shall not discriminate against any employee or applicant for employment because of race, color, religion, sex, or national origin.
(2) The Contractor shall take affirmative action to ensure that applicants are employed, and that employees are treated during employment, without regard to their race, color, religion, sex, or national origin. This shall include, but not be limited to, (i) employment, (ii) upgrading, (iii) demotion, (iv) transfer, (v) recruitment or recruitment advertising, (vi) layoff or termination, (vii) rates of pay or other forms of compensation, and (viii) selection for training, including apprenticeship.
(3) The Contractor shall post in conspicuous places available to employees and applicants for employment the notices to be provided by the Contracting Officer that explain this clause.
(4) The Contractor shall, in all solicitations or advertisements for employees placed by or on behalf of the Contractor, state that all qualified applicants will receive consideration for employment without regard to race, color, religion, sex, or national origin.
(5) The Contractor shall send, to each labor union or representative of workers with which it has a collective bargaining agreement or other contract or understanding, the notice to be provided by the Contracting Officer advising the labor union or workers' representative of the Contractor's commitments under this clause, and post copies of the notice in conspicuous places available to employees and applicants for employment.
(6) The Contractor shall comply with Executive Order 11246, as amended, and the rules, regulations, and orders of the Secretary of Labor.
(7) The Contractor shall furnish to the contracting agency all information required by Executive Order 11246, as amended, and by the rules, regulations, and orders of the Secretary of Labor. Standard Form 100 (EEO-1), or any successor form, is the prescribed form to be filed within 30 days following the award, unless filed within 12 months preceding the date of award.
(8) The Contractor shall permit access to its books, records, and accounts by the contracting agency or the Office of Federal Contract Compliance Programs (OFCCP) for the purposes of investigation to ascertain the Contractor's compliance with the applicable rules, regulations, and orders.
(9) If the OFCCP determines that the Contractor is not in compliance with this clause or any rule, regulation, or order of the Secretary of Labor, this contract may be canceled, terminated, or suspended in whole or in part and the Contractor may be declared ineligible for further Government contracts, under the procedures authorized in Executive Order 11246, as amended. In addition, sanctions may be imposed and remedies invoked against the Contractor as provided in Executive Order 11246, as amended, the rules, regulations, and orders of the Secretary of Labor, or as otherwise provided by law.
(10) The Contractor shall include the terms and conditions of subparagraph (b)(1) through (11) of this clause in every subcontract or purchase order that is not exempted by the rules, regulations, or orders of the Secretary of Labor issued under Executive Order 11246, as amended, so that these terms and conditions will be binding upon each subcontractor or vendor.

(11) The Contractor shall take such action with respect to any subcontract or purchase order as the contracting agency may direct as a means of enforcing these terms and conditions, including sanctions for noncompliance; provided, that if the Contractor becomes involved in, or is threatened with, litigation with a subcontractor or vendor as a result of any direction, the Contractor may request the United States to enter into the litigation to protect the interests of the United States.

(c) Notwithstanding any other clause in this contract, disputes relative to this clause will be governed by the procedures in 41 CFR 60-1.1.

(End of clause)
(R 7-103.18 1978 SEP)
(R 1-12.803-2)
(R 7-607.13 1978 SEP)

38 52.222-27 AFFIRMATIVE ACTION COMPLIANCE REQUIREMENTS FOR CONSTRUCTION (APR 1984)

(a) Definitions.

"Covered area," as used in this clause, means the geographical area described in the solicitation for this contract.

"Director," as used in this clause, means Director, Office of Federal Contract Compliance Programs (OFCCP), United States Department of Labor, or any person to whom the Director delegates authority.

"Employer's identification number," as used in this clause, means the Federal Social Security number used on the employer's quarterly federal tax return, U.S. Treasury Department Form 941.

"Minority," as used in this clause, means--

(1) American Indian or Alaskan Native (all persons having origins in any of the original peoples of North America and maintaining identifiable tribal affiliations through membership and participation or community identification).

(2) Asian and Pacific Islander (all persons having origins in any of the original peoples of the Far East, Southeast Asia, the Indian Subcontinent, or the Pacific Islands);

(3) Black (all persons having origins in any of the black African racial groups not of Hispanic origin); and

(4) Hispanic (all persons of Mexican, Puerto Rican, Cuban, Central or South American, or other Spanish culture or origin, regardless of race).

(b) If the Contractor, or a subcontractor at any tier, subcontracts a portion of the work involving any construction trade, each such subcontract in excess of $10,000 shall include this clause and the Notice containing the goals for minority and female participation stated in the solicitation for this contract.

(c) If the Contractor is participating in a Hometown Plan (41 CFR 60-4) approved by the U.S. Department of Labor in a covered area, either individually or through an association, its affirmative action obligations on all work in the plan area (including goals) shall comply with the plan for those trades that have unions participating in the plan. Contractors must be able to demonstrate participation in, and compliance with, the provisions of the plan. Each Contractor or subcontractor participating in an approved plan is also required to comply with its obligations under the Equal Opportunity clause, and to make a good faith effort to achieve each goal under the plan in each trade in which it has employees. The overall good-faith performance by other Contractors or subcontractors toward a goal in an approved plan does not excuse any Contractor's or subcontractor's failure to make good-faith efforts to achieve the plan's goals.

(d) The Contractor shall implement the affirmative action procedures in subparagraphs (g)(1) through (16) of this clause. The goals stated in the solicitation for this contract are expressed as percentages of the total hours of employment and training of minority and female utilization that the Contractor should reasonably be able to achieve in each construction trade in which it has employees in the covered area. If the Contractor performs construction work in a geographical area located outside of the covered area, it shall apply the goals established for the geographical area where that work is actually performed. The Contractor is expected to make substantially uniform progress toward its goals in each craft.

(e) Neither the terms and conditions of any collective bargaining agreement, nor the failure by a union with which the Contractor has a collective bargaining agreement, to refer minorities or women shall excuse

the Contractor's obligations under this clause, Executive Order 11246, as amended, or the regulations thereunder.

(f) In order for the nonworking training hours of apprentices and trainees to be counted in meeting the goals, apprentices and trainees must be employed by the Contractor during the training period, and the Contractor must have made a commitment to employ the apprentices and trainees at the completion of their training, subject to the availability of employment opportunities. Trainees must be trained pursuant to training programs approved by the U.S. Department of Labor.

(g) The Contractor shall take affirmative action to ensure equal employment opportunity. The evaluation of the Contractor's compliance with this clause shall be based upon its effort to achieve maximum results from its actions. The Contractor shall document these efforts fully and implement affirmative action steps at least as extensive as the following:

(1) Ensure a working environment free of harassment, intimidation, and coercion at all sites and in all facilities where the Contractor's employees are assigned to work. The Contractor, if possible, will assign two or more women to each construction project. The Contractor shall ensure that foremen, superintendents, and other onsite supervisory personnel are aware of and carry out the Contractor's obligation to maintain such a working environment, with specific attention to minority or female individuals working at these sites or facilities.

(2) Establish and maintain a current list of sources for minority and female recruitment. Provide written notification to minority and female recruitment sources and community organizations when the Contractor or its unions have employment opportunities available, and maintain a record of the organizations' responses.

(3) Establish and maintain a current file of the names, addresses, and telephone numbers of each minority and female off-the-street applicant, referrals of minorities or females from unions, recruitment sources, or community organizations, and the action taken with respect to each individual. If an individual was sent to the union hiring hall for referral and not referred back to the Contractor by the union or, if referred back, not employed by the Contractor, this shall be documented in the file, along with whatever additional actions the Contractor may have taken.

(4) Immediately notify the Director when the union or unions with which the Contractor has a collective bargaining agreement has not referred back to the Contractor a minority or woman sent by the Contractor, or when the Contractor has other information that the union referral process has impeded the Contractor's efforts to meet its obligations.

(5) Develop on-the-job training opportunities and/or participate in training programs for the area that expressly include minorities and women, including upgrading programs and apprenticeship and trainee programs relevant to the Contractor's employment needs, especially those programs funded or approved by the Department of Labor. The Contractor shall provide notice of these programs to the sources compiled under subparagraph (g)(2) above.

(6) Disseminate the Contractor's equal employment policy by--

(i) Providing notice of the policy to unions and to training, recruitment, and outreach programs, and requesting their cooperation in assisting the Contractor in meeting its contract obligations;

(ii) Including the policy in any policy manual and in collective bargaining agreements;

(iii) Publicizing the policy in the company newspaper, annual report, etc.;

(iv) Reviewing the policy with all management personnel and with all minority and female employees at least once a year; and

(v) Posting the policy on bulletin boards accessible to employees at each location where construction work is performed.

(7) Review, at least annually, the Contractor's equal employment policy and affirmative action obligations with all employees having responsibility for hiring, assignment, layoff, termination, or other employment decisions. Conduct review of this policy with all onsite supervisory personnel before initiating construction work at a job site. A written record shall be made and maintained identifying the time and place of these meetings, persons attending, subject matter discussed, and disposition of the subject matter.

(8) Disseminate the Contractor's equal employment policy externally by including it in any advertising in the news media, specifically

including minority and female news media. Provide written notification to, and discuss this policy with, other Contractors and subcontractors with which the Contractor does or anticipates doing business.

(9) Direct recruitment efforts, both oral and written, to minority, female, and community organizations, to schools with minority and female students, and to minority and female recruitment and training organizations serving the Contractor's recruitment area and employment needs. Not later than 1 month before the date for acceptance of applications for apprenticeship or training by any recruitment source, send written notification to organizations such as the above, describing the openings, screening procedures, and tests to be used in the selection process.

(10) Encourage present minority and female employees to recruit minority persons and women. Where reasonable, provide after-school, summer, and vacation employment to minority and female youth both on the site and in other areas of the Contractor's workforce.

(11) Validate all tests and other selection requirements where required under 41 CFR 60-3.

(12) Conduct, at least annually, an inventory and evaluation at least of all minority and female personnel for promotional opportunities. Encourage these employees to seek or to prepare for, through appropriate training, etc., opportunities for promotion.

(13) Ensure that seniority practices job classifications, work assignments, and other personnel practices do not have a discriminatory effect by continually monitoring all personnel and employment-related activities to ensure that the Contractor's obligations under this contract are being carried out.

(14) Ensure that all facilities and company activities are nonsegregated except that separate or single-user toilet and necessary changing facilities shall be provided to assure privacy between the sexes.

(15) Maintain a record of solicitations for subcontracts for minority and female construction contractors and suppliers, including circulation of solicitations to minority and female contractor associations and other business associations.

(16) Conduct a review, at least annually, of all supervisors' adherence to and performance under the Contractor's equal employment policy and affirmative action obligations.

(h) The Contractor is encouraged to participate in voluntary associations that may assist in fulfilling one or more of the affirmative action obligations contained in subparagraphs (g)(1) through (16). The efforts of a contractor association, joint contractor-union, contractor-community, or similar group of which the contractor is a member and participant may be asserted as fulfilling one or more of its obligations under subparagraphs (g)(1) through (16), provided the Contractor--

(1) Actively participates in the group;

(2) Makes every effort to ensure that the group has a positive impact on the employment of minorities and women in the industry;

(3) Ensures that concrete benefits of the program are reflected in the Contractor's minority and female workforce participation;

(4) Makes a good-faith effort to meet its individual goals and timetables; and

(5) Can provide access to documentation that demonstrates the effectiveness of actions taken on behalf of the Contractor. The obligation to comply is the Contractor's, and failure of such a group to fulfill an obligation shall not be a defense for the Contractor's noncompliance.

(i) A single goal for minorities and a separate single goal for women shall be established. The Contractor is required to provide equal employment opportunity and to take affirmative action for all minority groups, both male and female, and all women, both minority and nonminority. Consequently, the Contractor may be in violation of Executive Order 11246, as amended, if a particular group is employed in a substantially disparate manner.

(j) The Contractor shall not use goals or affirmative action standards to discriminate against any person because of race, color, religion, sex, or national origin.

(k) The Contractor shall not enter into any subcontract with any person or firm debarred from Government contracts under Executive Order 11246, as amended.

(l) The Contractor shall carry out such sanctions and penalties for violation of this clause and of the Equal Opportunity clause, including suspension, termination, and cancellation of existing subcontracts, as may be imposed or ordered under Executive Order 11246, as amended, and its implementing regulations, by the OFCCP. Any failure to carry out these sanctions and penalties as ordered shall be a violation of this clause and Executive Order 11246, as amended.

(m) The Contractor in fulfilling its obligations under this clause shall implement affirmative action procedures at least as extensive as those prescribed in paragraph (g) above, so as to achieve maximum results from its efforts to ensure equal employment opportunity. If the Contractor fails to comply with the requirements of Executive Order 11246, as amended, the implementing regulations, or this clause, the Director shall take action as prescribed in 41 CFR 60-4.8.

(n) The Contractor shall designate a responsible official to--

(1) Monitor all employment-related activity to ensure that the Contractor's equal employment policy is being carried out;

(2) Submit reports as may be required by the Government; and

(3) Keep records that shall at least include for each employee the name, address, telephone number, construction trade, union affiliation (if any), employee identification number, social security number, race, sex, status (e.g., mechanic, apprentice, trainee, helper, or laborer), dates of changes in status, hours worked per week in the indicated trade, rate of pay, and locations at which the work was performed. Records shall be maintained in an easily understandable and retrievable form; however, to the degree that existing records satisfy this requirement, separate records are not required to be maintained.

(o) Nothing contained herein shall be construed as a limitation upon the application of other laws that establish different standards of compliance or upon the requirements for the hiring of local or other area residents (e.g., those under the Public Works Employment Act of 1977 and the Community Development Block Grant Program).

(End of clause)

(R 7-603.60 1978 SEP)

39 52.222-35 AFFIRMATIVE ACTION FOR DISABLED VETERANS AND VETERANS OF THE VIETNAM ERA (APR 1998)

(a) Definitions. As used in this clause--

"All employment openings" includes all positions except executive and top management, those positions that will be filled from within the contractor's organization, and positions lasting 3 days or less. This term includes full-time employment, temporary employment of more than 3 days' duration, and part-time employment.

"Appropriate office of the State employment service system" means the local office of the Federal-State national system of public employment offices with assigned responsibility to serve the area where the employment opening is to be filled, including the District of Columbia, Guam, the Commonwealth of Puerto Rico, and the Virgin Islands.

"Positions that will be filled from within the Contractor's organization" means employment openings for which no consideration will be given to persons outside the Contractor's organization (including any affiliates, subsidiaries, and parent companies) and includes any openings that the Contractor proposes to fill from regularly established "recall" lists. The exception does not apply to a particular opening once an employer decides to consider applicants outside of its organization.

"Veteran of the Vietnam era" means a person who--

(1) Served on active duty for a period of more than 180 days, any part of which occurred between August 5, 1964, and May 7, 1975, and was discharged or released therefrom with other than a dishonorable discharge; or

(2) Was discharged or released from active duty for a service-connected disability if any part of such active duty was performed between August 5, 1964, and May 7, 1975.

(b) General. (1) Regarding any position for which the employee or applicant for employment is qualified, the Contractor shall not discriminate against the individual because the individual is a disabled veteran or a veteran of the Vietnam era. The Contractor

agrees to take affirmative action to employ, advance in employment, and otherwise treat qualified disabled veterans and veterans of the Vietnam era without discrimination based upon their disability or veterans' status in all employment practices such as--

(i) Employment;
(ii) Upgrading;
(iii) Demotion or transfer;
(iv) Recruitment;
(v) Advertising;
(vi) Layoff or termination;
(vii) Rates of pay or other forms of compensation; and
(viii) Selection for training, including apprenticeship.

(2) The Contractor agrees to comply with the rules, regulations, and relevant orders of the Secretary of Labor (Secretary) issued under the Vietnam Era Veterans' Readjustment Assistance Act of 1972 (the Act), as amended.

(c) Listing openings. (1) The Contractor agrees to list all employment openings existing at contract award or occurring during contract performance, at an appropriate office of the State employment service system in the locality where the opening occurs. These openings include those occurring at any Contractor facility, including one not connected with performing this contract. An independent corporate affiliate is exempt from this requirement.

(2) State and local government agencies holding Federal contracts of $10,000 or more shall also list all employment openings with the appropriate office of the State employment service.

(3) The listing of employment openings with the State employment service system is required at least concurrently with using any other recruitment source or effort and involves the obligations of placing a bona fide job order, including accepting referrals of veterans and nonveterans. This listing does not require hiring any particular job applicant or hiring from any particular group of job applicants and is not intended to relieve the Contractor from any requirements of Executive orders or regulations concerning nondiscrimination in employment.

(4) Whenever the Contractor becomes contractually bound to the listing terms of this clause, it shall advise the State employment service system, in each State where it has establishments, of the name and location of each hiring location in the State. As long as the Contractor is contractually bound to these terms and has so advised the State system, it need not advise the State system of subsequent contracts. The Contractor may advise the State system when it is no longer bound by this contract clause.

(d) Applicability. This clause does not apply to the listing of employment openings that occur and are filled outside the 50 States, the District of Columbia, the Commonwealth of Puerto Rico, Guam, and the Virgin Islands.

(e) Postings. (1) The Contractor agrees to post employment notices stating (i) the Contractor's obligation under the law to take affirmative action to employ and advance in employment qualified disabled veterans and veterans of the Vietnam era, and (ii) the rights of applicants and employees.

(2) These notices shall be posted in conspicuous places that are available to employees and applicants for employment. They shall be in a form prescribed by the Deputy Assistant Secretary for Federal Contract Compliance Programs, Department of Labor (Deputy Assistant Secretary), and provided by or through the Contracting Officer.

(3) The Contractor shall notify each labor union or representative of workers with which it has a collective bargaining agreement or other contract understanding, that the Contractor is bound by the terms of the Act, and is committed to take affirmative action to employ, and advance in employment, qualified disabled veterans and veterans of the Vietnam era.

(f) Noncompliance. If the Contractor does not comply with the requirements of this clause, appropriate actions may be taken under the rules, regulations, and relevant orders of the Secretary issued pursuant to the Act.

(g) Subcontracts. The Contractor shall include the terms of this clause in every subcontract or purchase order of $10,000 or more unless exempted by rules, regulations, or orders of the Secretary. The Contractor shall act as specified by the Deputy Assistant Secretary

to enforce the terms, including action for noncompliance.
(End of clause)

40 52.222-36 AFFIRMATIVE ACTION FOR WORKERS WITH DISABILITIES (JUN 1998)

(a) General. (1) Regarding any position for which the employee or applicant for employment is qualified, the Contractor shall not discriminate against any employee or applicant because of physical or mental disability. The Contractor agrees to take affirmative action to employ, advance in employment, and otherwise treat qualified individuals with disabilities without discrimination based upon their physical or mental disability in all employment practices such as--

(i) Recruitment, advertising, and job application procedures;

(ii) Hiring, upgrading, promotion, award of tenure, demotion, transfer, layoff, termination, right of return from layoff, and rehiring;

(iii) Rates of pay or any other form of compensation and changes in compensation;

(iv) Job assignments, job classifications, organizational structures, position descriptions, lines of progression, and seniority lists;

(v) Leaves of absence, sick leave, or any other leave;

(vi) Fringe benefits available by virtue of employment, whether or not administered by the Contractor;

(vii) Selection and financial support for training, including apprenticeships, professional meetings, conferences, and other related activities, and selection for leaves of absence to pursue training;

(viii) Activities sponsored by the Contractor, including social or recreational programs; and

(ix) Any other term, condition, or privilege of employment.

(2) The Contractor agrees to comply with the rules, regulations, and relevant orders of the Secretary of Labor (Secretary) issued under the Rehabilitation Act of 1973 (29 U.S.C. 793) (the Act), as amended.

(b) Postings. (1) The Contractor agrees to post employment notices stating--

(i) The Contractor's obligation under the law to take affirmative action to employ and advance in employment qualified individuals with disabilities; and

(ii) The rights of applicants and employees.

(2) These notices shall be posted in conspicuous places that are available to employees and applicants for employment. The Contractor shall ensure that applicants and employees with disabilities are informed of the contents of the notice (e.g., the Contractor may have the notice read to a visually disabled individual, or may lower the posted notice so that it might be read by a person in a wheelchair). The notices shall be in a form prescribed by the Deputy Assistant Secretary for Federal Contract Compliance of the U.S. Department of Labor (Deputy Assistant Secretary) and shall be provided by or through the Contracting Officer.

(3) The Contractor shall notify each labor union or representative of workers with which it has a collective bargaining agreement or other contract understanding, that the Contractor is bound by the terms of Section 503 of the Act and is committed to take affirmative action to employ, and advance in employment, qualified individuals with physical or mental disabilities.

(c) Noncompliance. If the Contractor does not comply with the requirements of this clause, appropriate actions may be taken under the rules, regulations, and relevant orders of the Secretary issued pursuant to the Act.

(d) Subcontracts. The Contractor shall include the terms of this clause in every subcontract or purchase order in excess of $10,000 unless exempted by rules, regulations, or orders of the Secretary. The Contractor shall act as specified by the Deputy Assistant Secretary to enforce the terms, including action for noncompliance.
(End of clause)

41 52.222-37 EMPLOYMENT REPORTS ON DISABLED VETERANS AND VETERANS OF THE VIETNAM ERA (APR 1998)

(a) Unless the Contractor is a State or local government agency, the Contractor shall report at least annually, as required by the Secretary of Labor, on--

(1) The number of disabled veterans and the number of veterans of the Vietnam era in the workforce of the Contractor by job category and hiring location; and

(2) The total number of new employees hired during the period covered by the report, and of that total, the number of disabled veterans, and the number of veterans of the Vietnam era.

(b) The above items shall be reported by completing the form entitled "Federal Contractor Veterans' Employment Report VETS-100."

(c) Reports shall be submitted no later than March 31 of each year beginning March 31, 1988.

(d) The employment activity report required by paragraph (a)(2) of this clause shall reflect total hires during the most recent 12-month period as of the ending date selected for the employment profile report required by paragraph (a)(1) of this clause. Contractors may select an ending date: (1) As of the end of any pay period during the period January through March 1st of the year the report is due, or (2) as of December 31, if the contractor has previous written approval from the Equal Employment Opportunity Commission to do so for purposes of submitting the Employer Information Report EEO-1 (Standard Form 100).

(e) The count of veterans reported according to paragraph (a) of this clause shall be based on voluntary disclosure. Each Contractor subject to the reporting requirements at 38 U.S.C. 4212 shall invite all disabled veterans and veterans of the Vietnam era who wish to benefit under the affirmative action program at 38 U.S.C. 4212 to identify themselves to the Contractor. The invitation shall state that the information is voluntarily provided; that the information will be kept confidential; that disclosure or refusal to provide the information will not subject the applicant or employee to any adverse treatment; and that the information will be used only in accordance with the regulations promulgated under 38 U.S.C. 4212.

(f) Subcontracts. The Contractor shall include the terms of this clause in every subcontract or purchase order of $10,000 or more unless exempted by rules, regulations, or orders of the Secretary.

(End of clause)

42 52.223-2 CLEAN AIR AND WATER (APR 1984)

(a) "Air Act", as used in this clause, means the Clean Air Act (42 U.S.C. 7401, et seq.).

"Clean air standards," as used in this clause, means--

(1) Any enforceable rules, regulations, guidelines, standards, limitations, orders, controls, prohibitions, work practices, or other requirements contained in, issued under, or otherwise adopted under the Air Act or Executive Order 11738;

(2) An applicable implementation plan as described in section 110(d) of the Air Act (42 U.S.C. 7410(d));

(3) An approved implementation procedure or plan under section 111(c) or section 111(d) of the Air Act (42 U.S.C. 7411(c) or (d)); or

(4) An approved implementation procedure under section 112(d) of the Air Act (42 U.S.C. 7412(d)).

"Clean water standards," as used in this clause, means any enforceable limitation, control, condition, prohibition, standard, or other requirement promulgated under the Water Act or contained in a permit issued to a discharger by the EPA or by a State under an approved program, as authorized by section 402 of the Water Act (33 U.S.C. 1342), or by local government to ensure compliance with pretreatment regulations as required by section 307 of the Water Act (33 U.S.C. 1317).

"Compliance," as used in this clause, means compliance with--

(1) Clean air or water standards; or

(2) A schedule or plan ordered or approved by a court of competent jurisdiction, the EPA, or an air or water pollution control agency under the requirements of the Air Act or Water Act and related regulations.

"Facility," as used in this clause, means any building, plant,

installation, structure, mine, vessel or other floating craft, location, or site of operations, owned, leased, or supervised by a Contractor or subcontractor, used in the performance of a contract or subcontract. When a location or site of operations includes more than one building, plant, installation, or structure, the entire location or site shall be deemed a facility except when the Administrator, or a designee, of the EPA determines that independent facilities are collocated in one geographical area.

"Water Act," as used in this clause, means Clean Water Act (33 U.S.C. 1251, et seq.).

(b) The Contractor agrees--

(1) To comply with all the requirements of section 114 of the Clean Air Act (42 U.S.C. 7414) and section 308 of the Clean Water Act (33 U.S.C. 1318) relating to inspection, monitoring, entry, reports, and information, as well as other requirements specified in section 114 and section 308 of the Air Act and the Water Act, and all regulations and guidelines issued to implement those acts before the award of this contract;

(2) That no portion of the work required by this prime contract will be performed in a facility listed on the EPA List of Violating Facilities on the date when this contract was awarded unless and until the EPA eliminates the name of the facility from the listing;

(3) To use best efforts to comply with clean air standards and clean water standards at the facility in which the contract is being performed; and

(4) To insert the substance of this clause into any nonexempt subcontract, including this subparagraph (b)(4).

(End of clause)

(R 7-103.29 1975 OCT)

(R 1-1.2302)

43 52.223-6 DRUG-FREE WORKPLACE (JAN 1997)

(a) Definitions. As used in this clause--

"Controlled substance" means a controlled substance in schedules I through V of section 202 of the Controlled Substances Act (21 U.S.C. 812) and as further defined in regulation at 21 CFR 1308.11 - 1308.15.

"Conviction" means a finding of guilt (including a plea of nolo contendere) or imposition of sentence, or both, by any judicial body charged with the responsibility to determine violations of the Federal or State criminal drug statutes.

"Criminal drug statute" means a Federal or non-Federal criminal statute involving the manufacture, distribution, dispensing, possession or use of any controlled substance.

"Drug-free workplace" means the site(s) for the performance of work done by the Contractor in connection with a specific contract at which employees of the Contractor are prohibited from engaging in the unlawful manufacture, distribution, dispensing, possession, or use of a controlled substance.

"Employee" means an employee of a Contractor directly engaged in the performance of work under a Government contract. "Directly engaged" is defined to include all direct cost employees and any other Contractor employee who has other than a minimal impact or involvement in contract performance.

"Individual" means an offeror/contractor that has no more than one employee including the offeror/contractor.

(b) The Contractor, if other than an individual, shall--within 30 days after award (unless a longer period is agreed to in writing for contracts of 30 days or more performance duration), or as soon as possible for contracts of less than 30 days performance duration--

(1) Publish a statement notifying its employees that the unlawful manufacture, distribution, dispensing, possession, or use of a controlled substance is prohibited in the Contractor's workplace and specifying the actions that will be taken against employees for violations of such prohibition;

(2) Establish an ongoing drug-free awareness program to inform such employees about--

(i) The dangers of drug abuse in the workplace;

(ii) The Contractor's policy of maintaining a drug-free workplace;

(iii) Any available drug counseling, rehabilitation, and employee assistance programs; and

(iv) The penalties that may be imposed upon employees for drug abuse violations occurring in the workplace;

(3) Provide all employees engaged in performance of the contract with a copy of the statement required by subparagraph (b)(1) of this clause;

(4) Notify such employees in writing in the statement required by subparagraph (b)(1) of this clause that, as a condition of continued employment on this contract, the employee will--

(i) Abide by the terms of the statement; and

(ii) Notify the employer in writing of the employee's conviction under a criminal drug statute for a violation occurring in the workplace no later than 5 days after such conviction.

(5) Notify the Contracting Officer in writing within 10 days after receiving notice under subdivision (b)(4)(ii) of this clause, from an employee or otherwise receiving actual notice of such conviction. The notice shall include the position title of the employee;

(6) Within 30 days after receiving notice under subdivision (b)(4)(ii) of this clause of a conviction, take one of the following actions with respect to any employee who is convicted of a drug abuse violation occurring in the workplace:

(i) Taking appropriate personnel action against such employee, up to and including termination; or

(ii) Require such employee to satisfactorily participate in a drug abuse assistance or rehabilitation program approved for such purposes by a Federal, State, or local health, law enforcement, or other appropriate agency, and

(7) Make a good faith effort to maintain a drug-free workplace through implementation of subparagraphs (b)(1) through (b)(6) of this clause.

(c) The Contractor, if an individual, agrees by award of the contract or acceptance of a purchase order, not to engage in the unlawful manufacture, distribution, dispensing, possession, or use of a controlled substance while performing this contract.

(d) In addition to other remedies available to the Government, the Contractor's failure to comply with the requirements of paragraph (b) or (c) of this clause may, pursuant to FAR 23.506, render the Contractor subject to suspension of contract payments, termination of the contract for default, and suspension or debarment.

(End of clause)

44 52.223-14 TOXIC CHEMICAL RELEASE REPORTING (OCT 1996)

(a) Unless otherwise exempt, the Contractor, as owner or operator of a facility used in the performance of this contract, shall file by July 1 for the prior calendar year an annual Toxic Chemical Release Inventory Form (Form R) as described in sections 313(a) and (g) of the Emergency Planning and Community Right-to-Know Act of 1986 (EPCRA) (42 U.S.C. 11023(a) and (g)), and section 6607 of the Pollution Prevention Act of 1990 (PPA) (42 U.S.C. 13106). The Contractor shall file, for each facility subject to the Form R filing and reporting requirements, the annual Form R throughout the life of the contract.

(b) A Contractor owned or operated facility used in the performance of this contract is exempt from the requirement to file an annual Form R if--

(1) The facility does not manufacture, process, or otherwise use any toxic chemicals listed under section 313(c) of EPCRA, 42 U.S.C. 11023(c);

(2) The facility does not have 10 or more full-time employees as specified in section 313(b)(1)(A) of EPCRA, 42 U.S.C. 11023(b)(1)(A);

(3) The facility does not meet the reporting thresholds of toxic chemicals established under section 313(f) of EPCRA, 42 U.S.C. 11023(f) (including the alternate thresholds at 40 CFR 372.27, provided an appropriate certification form has been filed with EPA);

(4) The facility does not fall within Standard Industrial Classification Code (SIC) designations 20 through 39 as set forth in Section 19.102 of the Federal Acquisition Regulation (FAR); or

(5) The facility is not located within any State of the United States, the District of Columbia, the Commonwealth of Puerto Rico, Guam, American Samoa, the United States Virgin Islands, the Northern Mariana Islands, or any other territory or possession over which the United States has jurisdiction.

(c) If the Contractor has certified to an exemption in accordance with one or more of the criteria in paragraph (b) of this clause, and after

award of the contract circumstances change so that any of its owned or operated facilities used in the performance of this contract is no longer exempt--

(1) The Contractor shall notify the Contracting Officer; and

(2) The Contractor, as owner or operator of a facility used in the performance of this contract that is no longer exempt, shall (i) submit a Toxic Chemical Release Inventory Form (Form R) on or before July 1 for the prior calendar year during which the facility becomes eligible; and (ii) continue to file the annual Form R for the life of the contract for such facility.

(d) The Contracting Officer may terminate this contract or take other action as appropriate, if the Contractor fails to comply accurately and fully with the EPCRA and PPA toxic chemical release filing and reporting requirements.

(e) Except for acquisitions of commercial items as defined in FAR Part 2, the Contractor shall--

(1) For competitive subcontracts expected to exceed $100,000 (including all options), include a solicitation provision substantially the same as the provision at FAR 52.223-13, Certification of Toxic Chemical Release Reporting; and

(2) Include in any resultant subcontract exceeding $100,000 (including all options), the substance of this clause, except this paragraph (e).

(End of clause)

45 52.223-7004 DRUG-FREE WORK FORCE (SEP 1988)

(a) Definitions.

(1) "Employee in a sensitive position," as used in this clause, means an employee who has been granted access to classified information; or employees in other positions that the Contractor determines involve national security, health or safety, or functions other than the foregoing requiring a high degree of trust and confidence.

(2) "Illegal drugs," as used in this clause, means controlled substances included in Schedules I and II, as defined by section 802(6) of Title 21 of the United States Code, the possession of which is unlawful under Chapter 13 of that Title. The term "illegal drugs" does not mean the use of a controlled substance pursuant to a valid prescription or other uses authorized by law.

(b) The Contractor agrees to institute and maintain a program for achieving the objective of a drug-free work force. While this clause defines criteria for such a program, contractors are encouraged to implement alternative approaches comparable to the criteria in paragraph (c) that are designed to achieve the objectives of this clause.

(c) Contractor programs shall include the following, or appropriate alternatives:

(1) Employee assistance programs emphasizing high level direction, education, counseling, rehabilitation, and coordination with available community resources;

(2) Supervisory training to assist in identifying and addressing illegal drug use by Contractor employees;

(3) Provision for self-referrals as well as supervisory referrals to treatment with maximum respect for individual confidentiality consistent with safety and security issues;

(4) Provision for identifying illegal drug users, including testing on a controlled and carefully monitored basis. Employee drug testing programs shall be established taking account of the following:

(i) The Contractor shall establish a program that provides for testing for the use of illegal drugs by employees in sensitive positions. The extent of and criteria for such testing shall be determined by the Contractor based on considerations that include the nature of the work being performed under the contract, the employee's duties, the efficient use of Contractor resources, and the risks to health, safety, or national security that could result from the failure of an employee adequately to discharge his or her position.

(ii) In addition, the Contractor may establish a program for employee drug testing--

(A) When there is a reasonable suspicion that an employee uses illegal drugs; or

(B) When an employee has been involved in an accident or unsafe practice;

(C) As part of or as a follow-up to counseling or rehabilitation for illegal drug use;

(D) As part of a voluntary employee drug testing program.

(iii) The Contractor may establish a program to test applicants for employment for illegal drug use.

(iv) For the purpose of administering this clause, testing for illegal drugs may be limited to those substances for which testing is prescribed by section 2.1 of Subpart B of the "Mandatory Guidelines for Federal Workplace Drug Testing Programs" (53 FR 11980 (April 11 1988)), issued by the Department of Health and Human Services.

(d) Contractors shall adopt appropriate personnel procedures to deal with employees who are found to be using drugs illegally. Contractors shall not allow any employee to remain on duty or perform in a sensitive position who is found to use illegal drugs until such time as the Contractor, in accordance with procedures established by the Contractor, determines that the employee may perform in such a position.

(e) The provisions of this clause pertaining to drug testing programs shall not apply to the extent they are inconsistent with state or local law, or with an existing collective bargaining agreement; provided that with respect to the latter, the Contractor agrees that those issues that are in conflict will be a subject of negotiation at the next collective bargaining session.

(End of clause)

46 52.225-5 BUY AMERICAN ACT--CONSTRUCTION MATERIALS (JUN 1997)

(a) The Buy American Act (41 U.S.C. 10) provides that the Government give preference to domestic construction material.

"Components," means those articles, materials, and supplies incorporated directly into construction materials.

"Construction materials," means an article, material, or supply brought to the construction site for incorporation into the building or work. Construction material also includes an item brought to the site pre-assembled from articles, materials or supplies. However, emergency life safety systems, such as emergency lighting, fire alarm, and audio evacuation systems, which are discrete systems incorporated into a public building or work and which are produced as a complete system, shall be evaluated as a single and distinct construction material regardless of when or how the individual parts or components of such systems are delivered to the construction site.

"Domestic construction material," means (1) an unmanufactured construction material mined or produced in the United States, or (2) a construction material manufactured in the United States, if the cost of its components mined, produced, or manufactured in the United States exceeds 50 percent of the cost of all its components. Components of foreign origin of the same class or kind as the construction materials determined to be unavailable pursuant to subparagraph 25.202(a)(2) of the Federal Acquisition Regulation (FAR) shall be treated as domestic.

(b)(1) The Buy American Act (41 U.S.C. 10a-10d) requires that only domestic construction material be used in performing this contract, except as provided in paragraphs (b)(2) and (b)(3) of this clause.

(2) This requirement does not apply to the excepted construction material or components listed by the Government as follows:

%%Insert list of applicable accepted materials or indicate "none"

none

(3) Other foreign construction material may be added to the list in paragraph (b)(2) of this clause if the Government determines that--

(i) The cost would be unreasonable (the cost of a particular domestic construction material shall be determined to be unreasonable when the cost of such material exceeds the cost of foreign material by more than 6 percent, unless the agency head determines a higher percentage to be appropriate);

(ii) The application of the restriction of the Buy American Act to a particular construction material would be impracticable or inconsistent with the public interest; or

(iii) The construction material is not mined, produced, or manufactured in the United States in sufficient and reasonably available commercial quantities of a satisfactory quality.

(4) The Contractor agrees that only domestic construction material will be used by the Contractor, subcontractors, material men, and suppliers in

the performance of this contract, except for foreign construction materials, if any, listed in paragraph (b)(2) of this clause.

(c) Request for determination. (1) Contractors requesting to use foreign construction material under paragraph (b)(3) of this clause shall provide adequate information for Government evaluation of the request for a determination regarding the inapplicability of the Buy American Act. Each submission shall include a description of the foreign and domestic construction materials, including unit of measure, quantity, price, time of delivery or availability, location of the construction project, name and address of the proposed contractor, and a detailed justification of the reason for use of foreign materials cited in accordance with paragraph (b)(3) of this clause. A submission based on unreasonable cost shall include a reasonable survey of the market and a completed price comparison table in the format in paragraph (d) of this clause. The price of construction material shall include all delivery costs to the construction site and any applicable duty (whether or not a duty-free certificate may be issued).

(2) If the Government determines after contract award that an exception to the Buy American Act applies, the contract shall be modified to allow use of the foreign construction material, and adequate consideration shall be negotiated. However, when the basis for the exception is the unreasonable price of a domestic construction material, adequate consideration shall not be less than the differential established in paragraph (b)(3)(i) of this clause.

(3) If the Government does not determine that an exception to the Buy American Act applies, the use of that particular foreign construction material will be a failure to comply with the Act.

(d) For evaluation of requests under paragraph (c) of this clause based on unreasonable cost, the following information and any applicable supporting data based on the survey of suppliers shall be included in the request:

Foreign and Domestic Construction Materials Price Comparison

Construction material description	Unit of measure	Quantity	Price (dollars) +
Item 1:			
Foreign construction material.....	.....	.....	.....
Domestic construction material.....	.....	.....	.....
Item 2:			
Foreign construction material.....	.....	.....	.....
Domestic construction material.....	.....	.....	.....

List name, address, telephone number, and contact for suppliers surveyed. Attach copy of response; if oral, attach summary. Include other applicable supporting information.

+ Include all delivery costs to the construction site and any applicable duty (whether or not a duty-free entry certificate is issued).

(End of clause)

47 52.225-11 RESTRICTIONS ON CERTAIN FOREIGN PURCHASES (AUG 1998)

(a) Unless advance written approval of the Contracting Officer is obtained, the Contractor shall not acquire, for use in the performance of this contract, any supplies or services originating from sources within, or that were located in or transported from or through, countries whose products are banned from importation into the United States by Executive order or regulations of the Office of Foreign Assets Control, Department of the Treasury. Those countries include Cuba, Iran, Iraq, Libya, North Korea, and Sudan.

(b) The Contractor shall not acquire for use in the performance of this contract any supplies or services from entities controlled by the Government of Iraq.

(c) The Contractor agrees to insert the provisions of this clause, including this paragraph (c), in all subcontracts hereunder.

(End of clause)

48 52.226-1 UTILIZATION OF INDIAN ORGANIZATIONS AND INDIAN-OWNED ECONOMIC ENTERPRISES (SEP 1996)

(a) For Department of Defense contracts, this clause applies only if the contract includes a subcontracting plan incorporated under the terms of the clause at 52.219-9, Small, Small Disadvantaged and Women-Owned Small Business Subcontracting Plan. It does not apply to contracts awarded based on a subcontracting plan submitted and approved under paragraph (g) of the clause at 52.219

(b) Definitions. As used in this clause:

"Indian" means any person who is a member of any Indian tribe, band, group, pueblo or community which is recognized by the Federal Government as eligible for services from the Bureau of Indian Affairs (BIA) in accordance with 25 U.S.C. 1452(c) and any "Native" as defined in the Alaska Native Claims Settlement Act (43 U.S.C. 1601).

"Indian organization" means the governing body of any Indian tribe or entity established or recognized by the governing body of an Indian tribe for the purposes of 25 U.S.C., Chapter 17.

"Indian-owned economic enterprise" means any Indian-owned (as determined by the Secretary of the Interior) commercial, industrial, or business activity established or organized for the purpose of profit, provided that Indian ownership shall constitute not less than 51 percent of the enterprise.

"Indian tribe" means any Indian tribe, band, group, pueblo or community, including native villages and native groups (including corporations organized by Kenai, Juneau, Sitka, and Kodiak) as defined in the Alaska Native Claims Settlement Act, which is recognized by the Federal Government as eligible for services from BIA in accordance with 25 U.S.C. 1542(c).

"Interested party" means a prime contractor or an actual or prospective offeror whose direct economic interest would be affected by the award of a subcontract or by the failure to award a subcontract.

(c) The Contractor agrees to use its best efforts to give Indian organizations and Indian-owned economic enterprises (25 U.S.C. 1544) the maximum practicable opportunity to participate in the subcontracts it awards to the fullest extent consistent with efficient performance of its contract.

(1) The Contracting Officer and the Contractor, acting in good faith, may rely on the self-certification of an Indian organization or Indian-owned economic enterprise as to its eligibility, unless an interested party challenges its status or the Contracting Officer has independent reason to question that status. In the event of a challenge to the self-certification of a subcontractor, the Contracting Officer shall refer the matter to the U.S. Department of the Interior, Bureau of Indian Affairs (BIA), Attn: Chief, Division of Contracting and Grants Administration, 1849 C Street, NW, MS-334A-SIB, Washington, DC 20245. The BIA will determine the eligibility and notify the Contracting Officer. The 5 percent incentive payment will not be made within 50 working days of subcontract award or while a challenge is pending. If a subcontractor is determined to be an ineligible participant, no incentive payment will be made under the Indian Incentive Program.

(2) The Contractor may request an adjustment under the Indian Incentive Program to the following:

(i) The estimated cost of a cost-type contract.

(ii) The target cost of a cost-plus-incentive-fee prime contract.

(iii) The target cost and ceiling price of a fixed-price incentive prime contract.

(iv) The price of a firm-fixed-price prime contract.

(3) The amount of the equitable adjustment to the prime contract shall be 5 percent of the estimated cost, target cost or firm-fixed-price included in the subcontract initially awarded to the Indian organization or Indian-owned economic enterprise.

(4) The Contractor has the burden of proving the amount claimed and must assert its request for an adjustment prior to completion of contract performance.

(d) The Contracting Officer, subject to the terms and conditions of the contract and the availability of funds, shall authorize an incentive payment of 5 percent of the amount paid to the subcontractor. Contracting Officers shall seek funding in accordance with agency procedures. The Contracting Officer's decision is final and not subject to the Disputes clause of this contract.

(End of clause)

49 52.227-1 AUTHORIZATION AND CONSENT (JUL 1995)

(a) The Government authorizes and consents to all use and manufacture, in performing this contract or any subcontract at any tier, of any invention described in and covered by a United States patent (1) embodied in the structure or composition of any article the delivery of which is accepted by the Government under this contract or (2) used in machinery, tools, or methods whose use necessarily results from compliance by the Contractor or a subcontractor with (i) specifications or written provisions forming a part of this contract or (ii) specific written instructions given by the Contracting Officer directing the manner of performance. The entire liability to the Government for infringement of a patent of the United States shall be determined solely by the provisions of the indemnity clause, if any, included in this contract or any subcontract hereunder (including any lower-tier subcontract), and the Government assumes liability for all other infringement to the extent of the authorization and consent hereinabove granted.

(b) The Contractor agrees to include, and require inclusion of, this clause, suitably modified to identify the parties, in all subcontracts at any tier for supplies or services (including construction, architect-engineer services, and materials, supplies, models, samples, and design or testing services expected to exceed the simplified acquisition threshold); however, omission of this clause from any subcontract, including those at or below the simplified acquisition threshold, does not affect this authorization and consent.

(End of clause)

50 52.227-2 NOTICE AND ASSISTANCE REGARDING PATENT AND COPYRIGHT INFRINGEMENT (AUG 1996)

(a) The Contractor shall report to the Contracting Officer, promptly and in reasonable written detail, each notice or claim of patent or copyright infringement based on the performance of this contract of which the Contractor has knowledge.

(b) In the event of any claim or suit against the Government on account of any alleged patent or copyright infringement arising out of the performance of this contract or out of the use of any supplies furnished or work or services performed under this contract, the Contractor shall furnish to the Government, when requested by the Contracting Officer, all evidence and information in possession of the Contractor pertaining to such suit or claim. Such evidence and information shall be furnished at the expense of the Government except where the Contractor has agreed to indemnify the Government.

(c) The Contractor agrees to include, and require inclusion of, this clause in all subcontracts at any tier for supplies or services (including construction and architect-engineer subcontracts and those for material, supplies, models, samples, or design or testing services) expected to exceed the simplified acquisition threshold at FAR 2.101.

(End of clause)

51 52.227-4 PATENT INDEMNITY--CONSTRUCTION CONTRACTS (APR 1984)

Except as otherwise provided, the Contractor agrees to indemnify the Government and its officers, agents, and employees against liability, including costs and expenses, for infringement upon any United States patent (except a patent issued upon an application that is now or may hereafter be withheld from issue pursuant to a Secrecy Order under 35 U.S.C. 181) arising out of performing this contract or out of the use or disposal by or for the account of the Government of supplies furnished or work performed under this contract.

(End of clause)

(R 7-602.16 1964 JUN)

52 52.227-7033 RIGHTS IN SHOP DRAWINGS (APR 1966)

(a) Shop drawings for construction means drawings, submitted to the Government by the Construction Contractor, subcontractor or any lower-tier subcontractor pursuant to a construction contract, showing in detail (i) the proposed fabrication and assembly of structural elements and (ii) the installation (i.e., form, fit, and attachment details) of materials or equipment. The Government may duplicate, use, and disclose in any manner and for any purpose shop drawings delivered under this contract.
(b) This clause, including this paragraph (b), shall be included in all subcontracts hereunder at any tier.
(End of clause)

53 52.228-2 ADDITIONAL BOND SECURITY (OCT 1997)

The Contractor shall promptly furnish additional security required to protect the Government and persons supplying labor or materials under this contract if--
(a) Any surety upon any bond, or issuing financial institution for other security, furnished with this contract becomes unacceptable to the Government;
(b) Any surety fails to furnish reports on its financial condition as required by the Government;
(c) The contract price is increased so that the penal sum of any bond becomes inadequate in the opinion of the Contracting Officer; or
(d) An irrevocable letter of credit (ILC) used as security will expire before the end of the period of required security. If the Contractor does not furnish an acceptable extension or replacement ILC, or other acceptable substitute, at least 30 days before an ILC's scheduled expiration, the Contracting officer has the right to immediately draw on the ILC.
(End of clause)

54 52.228-12 PROSPECTIVE SUBCONTRACTOR REQUESTS FOR BONDS (OCT 1995)

In accordance with Section 806(a)(3) of Pub. L. 102-190, as amended by Sections 2091 and 8105 of Pub. L. 103-355, upon the request of a prospective subcontractor or supplier offering to furnish labor or material for the performance of this contract for which a payment bond has been furnished to the Government pursuant to the Miller Act, the Contractor shall promptly provide a copy of such payment bond to the requester.
(End of clause)

55 52.229-3 FEDERAL, STATE, AND LOCAL TAXES (JAN 1991)

(a) "Contract date," as used in this clause, means the date set for bid opening or, if this is a negotiated contract or a modification, the effective date of this contract or modification.
"All applicable Federal, State, and local taxes and duties," as used in this clause, means all taxes and duties, in effect on the contract date, that the taxing authority is imposing and collecting on the transactions or property covered by this contract.
"After-imposed Federal tax," as used in this clause, means any new or increased Federal excise tax or duty, or tax that was exempted or excluded on the contract date but whose exemption was later revoked or reduced during the contract period, on the transactions or property covered by this contract that the Contractor is required to pay or bear as the result of legislative, judicial, or administrative action taking effect after the contract date. It does not include social security tax or other employment taxes.
"After-relieved Federal tax," as used in this clause, means any amount of Federal excise tax or duty, except social security or other employment taxes, that would otherwise have been payable on the transactions or property covered by this contract, but which the Contractor is not required to pay or bear, or for which the Contractor obtains a refund or drawback, as the result of legislative, judicial, or administrative action taking effect after the contract date.
(b) The contract price includes all applicable Federal, State, and local taxes and duties.

(c) The contract price shall be increased by the amount of any after-imposed Federal tax, provided the Contractor warrants in writing that no amount for such newly imposed Federal excise tax or duty or rate increase was included in the contract price, as a contingency reserve or otherwise.
(d) The contract price shall be decreased by the amount of any after-relieved Federal tax.
(e) The contract price shall be decreased by the amount of any Federal excise tax or duty, except social security or other employment taxes, that the Contractor is required to pay or bear, or does not obtain a refund of, through the Contractor's fault, negligence, or failure to follow instructions of the Contracting Officer.
(f) No adjustment shall be made in the contract price under this clause unless the amount of the adjustment exceeds $250.
(g) The Contractor shall promptly notify the Contracting Officer of all matters relating to any Federal excise tax or duty that reasonably may be expected to result in either an increase or decrease in the contract price and shall take appropriate action as the Contracting Officer directs.
(h) The Government shall, without liability, furnish evidence appropriate to establish exemption from any Federal, State, or local tax when the Contractor requests such evidence and a reasonable basis exists to sustain the exemption.

(End of clause)

56 52.231-7000 SUPPLEMENTAL COST PRINCIPLES (DEC 1991)

When the allowability of costs under this contract is determined in accordance with Part 31 of the Federal Acquisition Regulation (FAR), allowability shall also be determined in accordance with Part 231 of the Defense FAR Supplement, in effect on the date of this contract.

(End of clause)

57 52.232-5 PAYMENTS UNDER FIXED-PRICE CONSTRUCTION CONTRACTS (MAY 1997)

(a) Payment of price. The Government shall pay the Contractor the contract price as provided in this contract.
(b) Progress payments. The Government shall make progress payments monthly as the work proceeds, or at more frequent intervals as determined by the Contracting Officer, on estimates of work accomplished which meets the standards of quality established under the contract, as approved by the Contracting Officer.
(1) The Contractor's request for progress payments shall include the following substantiation:
(i) An itemization of the amounts requested, related to the various elements of work required by the contract covered by the payment requested.
(ii) A listing of the amount included for work performed by each subcontractor under the contract.
(iii) A listing of the total amount of each subcontract under the contract.
(iv) A listing of the amounts previously paid to each such subcontractor under the contract.
(v) Additional supporting data in a form and detail required by the Contracting Officer.
(2) In the preparation of estimates, the Contracting Officer may authorize material delivered on the site and preparatory work done to be taken into consideration. Material delivered to the Contractor at locations other than the site also may be taken into consideration if--
(i) Consideration is specifically authorized by this contract; and
(ii) The Contractor furnishes satisfactory evidence that it has acquired title to such material and that the material will be used to perform this contract.
(c) Contractor certification. Along with each request for progress payments, the Contractor shall furnish the following certification, or payment shall not be made: (However, if the Contractor elects to delete paragraph (c)(4) from the certification, the certification is still acceptable.)
I hereby certify, to the best of my knowledge and belief, that--
(1) The amounts requested are only for performance in accordance with

the specifications, terms, and conditions of the contract;

(2) Payments to subcontractors and suppliers have been made from previous payments received under the contract, and timely payments will be made from the proceeds of the payment covered by this certification, in accordance with subcontract agreements and the requirements of chapter 39 of Title 31, United States Code;

(3) This request for progress payments does not include any amounts which the prime contractor intends to withhold or retain from a subcontractor or supplier in accordance with the terms and conditions of the subcontract; and

(4) This certification is not to be construed as final acceptance of a subcontractor's performance.

_____
(Name)

_____
(Title)

_____
(Date)

(d) Refund of unearned amounts. If the Contractor, after making a certified request for progress payments, discovers that a portion or all of such request constitutes a payment for performance by the Contractor that fails to conform to the specifications, terms, and conditions of this contract (hereinafter referred to as the "unearned amount"), the Contractor shall--

(1) Notify the Contracting Officer of such performance deficiency; and

(2) Be obligated to pay the Government an amount (computed by the Contracting Officer in the manner provided in paragraph (j) of this clause) equal to interest on the unearned amount from the 8th day after the date of receipt of the unearned amount until--

(i) The date the Contractor notifies the Contracting Officer that the performance deficiency has been corrected; or

(ii) The date the Contractor reduces the amount of any subsequent certified request for progress payments by an amount equal to the unearned amount.

(e) Retainage. If the Contracting Officer finds that satisfactory progress was achieved during any period for which a progress payment is to be made, the Contracting Officer shall authorize payment to be made in full. However, if satisfactory progress has not been made, the Contracting Officer may retain a maximum of 10 percent of the amount of the payment until satisfactory progress is achieved. When the work is substantially complete, the Contracting Officer may retain from previously withheld funds and future progress payments that amount the Contracting Officer considers adequate for protection of the Government and shall release to the Contractor all the remaining withheld funds. Also, on completion and acceptance of each separate building, public work, or other division of the contract, for which the price is stated separately in the contract, payment shall be made for the completed work without retention of a percentage.

(f) Title, liability, and reservation of rights. All material and work covered by progress payments made shall, at the time of payment, become the sole property of the Government, but this shall not be construed as--

(1) Relieving the Contractor from the sole responsibility for all material and work upon which payments have been made or the restoration of any damaged work; or

(2) Waiving the right of the Government to require the fulfillment of all of the terms of the contract.

(g) Reimbursement for bond premiums. In making these progress payments, the Government shall, upon request, reimburse the Contractor for the amount of premiums paid for performance and payment bonds (including coinsurance and reinsurance agreements, when applicable) after the Contractor has furnished evidence of full payment to the surety. The retainage provisions in paragraph (e) of this clause shall not apply to that portion of progress payments attributable to bond premiums.

(h) Final payment. The Government shall pay the amount due the Contractor under this contract after--

(1) Completion and acceptance of all work;

(2) Presentation of a properly executed voucher; and

(3) Presentation of release of all claims against the Government arising by virtue of this contract, other than claims, in stated amounts, that the Contractor has specifically excepted from the operation of the release. A release may also be required of the assignee if the Contractor's claim to amounts payable under this contract has been

assigned under the Assignment of Claims Act of 1940 (31 U.S.C. 3727 and 41 U.S.C. 15).

(i) Limitation because of undefinitized work. Notwithstanding any provision of this contract, progress payments shall not exceed 80 percent on work accomplished on undefinitized contract actions. A "contract action" is any action resulting in a contract, as defined in FAR Subpart 2.1, including contract modifications for additional supplies or services, but not including contract modifications that are within the scope and under the terms of the contract, such as contract modifications issued pursuant to the Changes clause, or funding and other administrative changes.

(j) Interest computation on unearned amounts. In accordance with 31 U.S.C. 3903(c)(1), the amount payable under subparagraph (d)(2) of this clause shall be--

(1) Computed at the rate of average bond equivalent rates of 91-day Treasury bills auctioned at the most recent auction of such bills prior to the date the Contractor receives the unearned amount; and

(2) Deducted from the next available payment to the Contractor.

(End of clause)

58 52.232-17 INTEREST (JUN 1996)

(a) Except as otherwise provided in this contract under a Price Reduction for Defective Cost or Pricing Data clause or a Cost Accounting Standards clause, all amounts that become payable by the Contractor to the Government under this contract (net of any applicable tax credit under the Internal Revenue Code (26 U.S.C. 1481)) shall bear simple interest from the date due until paid unless paid within 30 days of becoming due. The interest rate shall be the interest rate established by the Secretary of the Treasury as provided in Section 12 of the Contract Disputes Act of 1978 (Public Law 95-563), which is applicable to the period in which the amount becomes due, as provided in paragraph (b) of this clause, and then at the rate applicable for each six-month period as fixed by the Secretary until the amount is paid.

(b) Amounts shall be due at the earliest of the following dates:

(1) The date fixed under this contract.

(2) The date of the first written demand for payment consistent with this contract, including any demand resulting from a default termination.

(3) The date the Government transmits to the Contractor a proposed supplemental agreement to confirm completed negotiations establishing the amount of debt.

(4) If this contract provides for revision of prices, the date of written notice to the Contractor stating the amount of refund payable in connection with a pricing proposal or a negotiated pricing agreement not confirmed by contract modification.

(c) The interest charge made under this clause may be reduced under the procedures prescribed in 32.614-2 of the Federal Acquisition Regulation in effect on the date of this contract.

(End of clause)

59 52.232-18 AVAILABILITY OF FUNDS (APR 1984)

Funds are not presently available for this contract. The Government's obligation under this contract is contingent upon the availability of appropriated funds from which payment for contract purposes can be made. No legal liability on the part of the Government for any payment may arise until funds are made available to the Contracting Officer for this contract and until the Contractor receives notice of such availability, to be confirmed in writing by the Contracting Officer.

(End of clause)

(SS 7-104.91(a) 1962 SEP)

60 52.232-23 ASSIGNMENT OF CLAIMS (JAN 1986)

(a) The Contractor, under the Assignment of Claims Act, as amended, 31 U.S.C. 3727, 41 U.S.C. 15 (hereafter referred to as "the Act"), may assign its rights to be paid amounts due or to become due as a result of the performance of this contract to a bank, trust company, or other financing

institution, including any Federal lending agency. The assignee under such an assignment may thereafter further assign or reassign its right under the original assignment to any type of financing institution described in the preceding sentence.

(b) Any assignment or reassignment authorized under the Act and this clause shall cover all unpaid amounts payable under this contract, and shall not be made to more than one party, except that an assignment or reassignment may be made to one party as agent or trustee for two or more parties participating in the financing of this contract.

(c) The Contractor shall not furnish or disclose to any assignee under this contract any classified document (including this contract) or information related to work under this contract until the Contracting Officer authorizes such action in writing.

(End of clause)

61 52.232-27 PROMPT PAYMENT FOR CONSTRUCTION CONTRACTS (JUN 1997)

Notwithstanding any other payment terms in this contract, the Government will make invoice payments and contract financing payments under the terms and conditions specified in this clause. Payment shall be considered as being made on the day a check is dated or the date of an electronic funds transfer. Definitions of pertinent terms are set forth in section 32.902 of the Federal Acquisition Regulation. All days referred to in this clause are calendar days, unless otherwise specified. (However, see subparagraph (a)(3) concerning payments due on Saturdays, Sundays, and legal holidays.)

(a) Invoice payments--

(1) Types of invoice payments. For purposes of this clause, there are several types of invoice payments that may occur under this contract, as follows:

(i) Progress payments, if provided for elsewhere in this contract, based on Contracting Officer approval of the estimated amount and value of work or services performed, including payments for reaching milestones in any project:

(A) The due date for making such payments shall be 14 days after receipt of the payment request by the designated billing office. If the designated billing office fails to annotate the payment request with the actual date of receipt at the time of receipt, the payment due date shall be the 14th day after the date of the Contractor's payment request, provided a proper payment request is received and there is no disagreement over quantity, quality, or Contractor compliance with contract requirements.

(B) The due date for payment of any amounts retained by the Contracting Officer in accordance with the clause at 52.232-5, Payments Under Fixed-Price Construction Contracts, shall be as specified in the contract or, if not specified, 30 days after approval for release to the Contractor by the Contracting Officer.

(ii) Final payments based on completion and acceptance of all work and presentation of release of all claims against the Government arising by virtue of the contract, and payments for partial deliveries that have been accepted by the Government (e.g., each separate building, public work, or other division of the contract for which the price is stated separately in the contract):

(A) The due date for making such payments shall be either the 30th day after receipt by the designated billing office of a proper invoice from the Contractor, or the 30th day after Government acceptance of the work or services completed by the Contractor, whichever is later. If the designated billing office fails to annotate the invoice with the date of actual receipt at the time of receipt, the invoice payment due date shall be the 30th day after the date of the Contractor's invoice, provided a proper invoice is received and there is no disagreement over quantity, quality, or Contractor compliance with contract requirements.

(B) On a final invoice where the payment amount is subject to contract settlement actions (e.g., release of claims), acceptance shall be deemed to have occurred on the effective date of the contract settlement.

(2) Contractor's invoice. The Contractor shall prepare and submit invoices to the designated billing office specified in the contract. A proper invoice must include the items listed in paragraphs (a)(2)(i) through (a)(2)(ix) of this clause. If the invoice does not comply with

these requirements, it shall be returned within 7 days after the date the designated billing office received the invoice, with a statement of the reasons why it is not a proper invoice. Untimely notification will be taken into account in computing any interest penalty owed the Contractor in the manner described in subparagraph (a)(4) of this clause.

(i) Name and address of the Contractor.

(ii) Invoice date. (The Contractor is encouraged to date invoices as close as possible to the date of mailing or transmission.)

(iii) Contract number or other authorization for work or services performed (including order number and contract line item number).

(iv) Description of work or services performed.

(v) Delivery and payment terms (e.g., prompt payment discount terms).

(vi) Name and address of Contractor official to whom payment is to be sent (must be the same as that in the contract or in a proper notice of assignment).

(vii) Name (where practicable), title, phone number, and mailing address of person to be notified in the event of a defective invoice.

(viii) For payments described in paragraph (a)(1)(i) of this clause, substantiation of the amounts requested and certification in accordance with the requirements of the clause at 52.232-5, Payments Under Fixed-Price Construction Contracts.

(ix) Any other information or documentation required by the contract.

(x) While not required, the Contractor is strongly encouraged to assign an identification number to each invoice.

(3) Interest penalty. An interest penalty shall be paid automatically by the designated payment office, without request from the Contractor, if payment is not made by the due date and the conditions listed in paragraphs (a)(3)(i) through (a)(3)(iii) of this clause are met, if applicable. However, when the due date falls on a Saturday, Sunday, or legal holiday when Federal Government offices are closed and Government business is not expected to be conducted, payment may be made on the following business day without incurring a late payment interest penalty.

(i) A proper invoice was received by the designated billing office.

(ii) A receiving report or other Government documentation authorizing payment was processed and there was no disagreement over quantity, quality, Contractor compliance with any contract term or condition, or requested progress payment amount.

(iii) In the case of a final invoice for any balance of funds due the Contractor for work or services performed, the amount was not subject to further contract settlement actions between the Government and the Contractor.

(4) Computing penalty amount. The interest penalty shall be at the rate established by the Secretary of the Treasury under section 12 of the Contract Disputes Act of 1978 (41 U.S.C. 611) that is in effect on the day after the due date, except where the interest penalty is prescribed by other governmental authority (e.g., tariffs). This rate is referred to as the "Renegotiation Board Interest Rate," and it is published in the Federal Register semiannually on or about January 1 and July 1. The interest penalty shall accrue daily on the invoice principal payment amount approved by the Government until the payment date of such approved principal amount; and will be compounded in 30-day increments inclusive from the first day after the due date through the payment date. That is, interest accrued at the end of any 30-day period will be added to the approved invoice principal payment amount and will be subject to interest penalties if not paid in the succeeding 30-day period. If the designated billing office failed to notify the Contractor of a defective invoice within the periods prescribed in subparagraph (a)(2) of this clause, the due date on the corrected invoice will be adjusted by subtracting from such date the number of days taken beyond the prescribed notification of defects period. Any interest penalty owed the Contractor will be based on this adjusted due date. Adjustments will be made by the designated payment office for errors in calculating interest penalties.

(i) For the sole purpose of computing an interest penalty that might be due the Contractor for payments described in paragraph (a)(1)(ii) of this clause, Government acceptance or approval shall be deemed to have occurred constructively on the 7th day after the Contractor has completed the work or services in accordance with the terms and conditions of the contract. In the event that actual acceptance or approval occurs within the constructive acceptance or approval period, the determination of an interest penalty shall be based on the actual date of acceptance or approval. Constructive acceptance or

constructive approval requirements do not apply if there is a disagreement over quantity, quality, or Contractor compliance with a contract provision. These requirements also do not compel Government officials to accept work or services, approve Contractor estimates, perform contract administration functions, or make payment prior to fulfilling their responsibilities.

(ii) The following periods of time will not be included in the determination of an interest penalty:

(A) The period taken to notify the Contractor of defects in invoices submitted to the Government, but this may not exceed 7 days.

(B) The period between the defects notice and resubmission of the corrected invoice by the Contractor.

(C) For incorrect electronic funds transfer (EFT) information, in accordance with the EFT clause of this contract.

(iii) Interest penalties will not continue to accrue after the filing of a claim for such penalties under the clause at 52.233-1, Disputes, or for more than 1 year. Interest penalties of less than $1 need not be paid.

(iv) Interest penalties are not required on payment delays due to disagreement between the Government and the Contractor over the payment amount or other issues involving contract compliance, or on amounts temporarily withheld or retained in accordance with the terms of the contract. Claims involving disputes, and any interest that may be payable, will be resolved in accordance with the clause at 52.233-1, Disputes.

(5) Prompt payment discounts. An interest penalty also shall be paid automatically by the designated payment office, without request from the Contractor, if a discount for prompt payment is taken improperly. The interest penalty will be calculated on the amount of discount taken for the period beginning with the first day after the end of the discount period through the date when the Contractor is paid.

(6) Additional interest penalty.

(i) A penalty amount, calculated in accordance with subdivision (a)(6)(iii) of this clause, shall be paid in addition to the interest penalty amount if the Contractor--

(A) Is owed an interest penalty of $1 or more;

(B) Is not paid the interest penalty within 10 days after the date the invoice amount is paid; and

(C) Makes a written demand to the designated payment office for additional penalty payment, in accordance with subdivision (a)(6)(ii) of this clause, postmarked not later than 40 days after the date the invoice amount is paid.

(ii)(A) Contractors shall support written demands for additional penalty payments with the following data. No additional data shall be required. Contractors shall--

(1) Specifically assert that late payment interest is due under a specific invoice, and request payment of all overdue late payment interest penalty and such additional penalty as may be required;

(2) Attach a copy of the invoice on which the unpaid late payment interest was due; and

(3) State that payment of the principal has been received, including the date of receipt.

(B) Demands must be postmarked on or before the 40th day after payment was made, except that--

(1) If the postmark is illegible or nonexistent, the demand must have been received and annotated with the date of receipt by the designated payment office on or before the 40th day after payment was made; or

(2) If the postmark is illegible or nonexistent and the designated payment office fails to make the required annotation, the demand's validity will be determined by the date the Contractor has placed on the demand; provided such date is no later than the 40th day after payment was made.

(iii)(A) The additional penalty shall be equal to 100 percent of any original late payment interest penalty, except--

(1) The additional penalty shall not exceed $5,000;

(2) The additional penalty shall never be less than $25; and

(3) No additional penalty is owed if the amount of the underlying interest penalty is less than $1.

(B) If the interest penalty ceases to accrue in accordance with the limits stated in subdivision (a)(4)(iii) of this clause, the amount

of the additional penalty shall be calculated on the amount of interest penalty that would have accrued in the absence of these limits, subject to the overall limits on the additional penalty specified in subdivision (a)(6)(iii)(A) of this clause.

(C) For determining the maximum and minimum additional penalties, the test shall be the interest penalty due on each separate payment made for each separate contract. The maximum and minimum additional penalty shall not be based upon individual invoices unless the invoices are paid separately. Where payments are consolidated for disbursing purposes, the maximum and minimum additional penalty determination shall be made separately for each contract therein.

(D) The additional penalty does not apply to payments regulated by other Government regulations (e.g., payments under utility contracts subject to tariffs and regulation).

(b) Contract financing payments--

(1) Due dates for recurring financing payments. If this contract provides for contract financing, requests for payment shall be submitted to the designated billing office as specified in this contract or as directed by the Contracting Officer. Contract financing payments shall be made on the 30th day after receipt of a proper contract financing request by the designated billing office. In the event that an audit or other review of a specific financing request is required to ensure compliance with the terms and conditions of the contract, the designated payment office is not compelled to make payment by the due date specified.

(2) Due dates for other contract financing. For advance payments, loans, or other arrangements that do not involve recurring submissions of contract financing requests, payment shall be made in accordance with the corresponding contract terms or as directed by the Contracting Officer.

(3) Interest penalty not applicable. Contract financing payments shall not be assessed an interest penalty for payment delays.

(c) Subcontract clause requirements. The Contractor shall include in each subcontract for property or services (including a material supplier) for the purpose of performing this contract the following:

(1) Prompt payment for subcontractors. A payment clause that obligates the Contractor to pay the subcontractor for satisfactory performance under its subcontract not later than 7 days from receipt of payment out of such amounts as are paid to the Contractor under this contract.

(2) Interest for subcontractors. An interest penalty clause that obligates the Contractor to pay to the subcontractor an interest penalty for each payment not made in accordance with the payment clause--

(i) For the period beginning on the day after the required payment date and ending on the date on which payment of the amount due is made; and

(ii) Computed at the rate of interest established by the Secretary of the Treasury, and published in the Federal Register, for interest payments under section 12 of the Contract Disputes Act of 1978 (41 U.S.C. 611) in effect at the time the Contractor accrues the obligation to pay an interest penalty.

(3) Subcontractor clause flowdown. A clause requiring each subcontractor to include a payment clause and an interest penalty clause conforming to the standards set forth in subparagraphs (c)(1) and (c)(2) of this clause in each of its subcontracts, and to require each of its subcontractors to include such clauses in their subcontracts with each lower-tier subcontractor or supplier.

(d) Subcontract clause interpretation. The clauses required by paragraph (c) of this clause shall not be construed to impair the right of the Contractor or a subcontractor at any tier to negotiate, and to include in their subcontract, provisions that--

(1) Retainage permitted. Permit the Contractor or a subcontractor to retain (without cause) a specified percentage of each progress payment otherwise due to a subcontractor for satisfactory performance under the subcontract without incurring any obligation to pay a late payment interest penalty, in accordance with terms and conditions agreed to by the parties to the subcontract, giving such recognition as the parties deem appropriate to the ability of a subcontractor to furnish a performance bond and a payment bond;

(2) Withholding permitted. Permit the Contractor or subcontractor to make a determination that part or all of the subcontractor's request for payment may be withheld in accordance with the subcontract agreement; and

(3) Withholding requirements. Permit such withholding without

incurring any obligation to pay a late payment penalty if--

(i) A notice conforming to the standards of paragraph (g) of this clause previously has been furnished to the subcontractor; and

(ii) A copy of any notice issued by a Contractor pursuant to subdivision (d)(3)(i) of this clause has been furnished to the Contracting Officer.

(e) Subcontractor withholding procedures. If a Contractor, after making a request for payment to the Government but before making a payment to a subcontractor for the subcontractor's performance covered by the payment request, discovers that all or a portion of the payment otherwise due such subcontractor is subject to withholding from the subcontractor in accordance with the subcontract agreement, then the Contractor shall--

(1) Subcontractor notice. Furnish to the subcontractor a notice conforming to the standards of paragraph (g) of this clause as soon as practicable upon ascertaining the cause giving rise to a withholding, but prior to the due date for subcontractor payment;

(2) Contracting Officer notice. Furnish to the Contracting Officer, as soon as practicable, a copy of the notice furnished to the subcontractor pursuant to subparagraph (e)(1) of this clause;

(3) Subcontractor progress payment reduction. Reduce the subcontractor's progress payment by an amount not to exceed the amount specified in the notice of withholding furnished under subparagraph (e)(1) of this clause;

(4) Subsequent subcontractor payment. Pay the subcontractor as soon as practicable after the correction of the identified subcontract performance deficiency, and--

(i) Make such payment within--

(A) Seven days after correction of the identified subcontract performance deficiency (unless the funds therefor must be recovered from the Government because of a reduction under paragraph (e)(5)(i)) of this clause; or

(B) Seven days after the Contractor recovers such funds from the Government; or

(ii) Incur an obligation to pay a late payment interest penalty computed at the rate of interest established by the Secretary of the Treasury, and published in the Federal Register, for interest payments under section 12 of the Contracts Disputes Act of 1978 (41 U.S.C. 611) in effect at the time the Contractor accrues the obligation to pay an interest penalty;

(5) Notice to Contracting Officer. Notify the Contracting Officer upon--

(i) Reduction of the amount of any subsequent certified application for payment; or

(ii) Payment to the subcontractor of any withheld amounts of a progress payment, specifying--

(A) The amounts withheld under subparagraph (e)(1) of this clause; and

(B) The dates that such withholding began and ended; and

(6) Interest to Government. Be obligated to pay to the Government an amount equal to interest on the withheld payments (computed in the manner provided in 31 U.S.C. 3903(c)(1)), from the 8th day after receipt of the withheld amounts from the Government until--

(i) The day the identified subcontractor performance deficiency is corrected; or

(ii) The date that any subsequent payment is reduced under subdivision (e)(5)(i) of this clause.

(f) Third-party deficiency reports--

(1) Withholding from subcontractor. If a Contractor, after making payment to a first-tier subcontractor, receives from a supplier or subcontractor of the first-tier subcontractor (hereafter referred to as a "second-tier subcontractor") a written notice in accordance with section 2 of the Act of August 24, 1935 (40 U.S.C. 270b, Miller Act), asserting a deficiency in such first-tier subcontractor's performance under the contract for which the Contractor may be ultimately liable, and the Contractor determines that all or a portion of future payments otherwise due such first-tier subcontractor is subject to withholding in accordance with the subcontract agreement, the Contractor may, without incurring an obligation to pay an interest penalty under subparagraph (e)(6) of this clause--

(i) Furnish to the first-tier subcontractor a notice conforming to the standards of paragraph (g) of this clause as soon as practicable

upon making such determination; and

(ii) Withhold from the first-tier subcontractor's next available progress payment or payments an amount not to exceed the amount specified in the notice of withholding furnished under paragraph (f)(1)(i) of this clause.

(2) Subsequent payment or interest charge. As soon as practicable, but not later than 7 days after receipt of satisfactory written notification that the identified subcontract performance deficiency has been corrected, the Contractor shall--

(i) Pay the amount withheld under paragraph (f)(1)(ii) of this clause to such first-tier subcontractor; or

(ii) Incur an obligation to pay a late payment interest penalty to such first-tier subcontractor computed at the rate of interest established by the Secretary of the Treasury, and published in the Federal Register, for interest payments under section 12 of the Contracts Disputes Act of 1978 (41 U.S.C. 611) in effect at the time the Contractor accrues the obligation to pay an interest penalty.

(g) Written notice of subcontractor withholding. A written notice of any withholding shall be issued to a subcontractor (with a copy to the Contracting Officer of any such notice issued by the Contractor), specifying--

(1) The amount to be withheld;

(2) The specific causes for the withholding under the terms of the subcontract; and

(3) The remedial actions to be taken by the subcontractor in order to receive payment of the amounts withheld.

(h) Subcontractor payment entitlement. The Contractor may not request payment from the Government of any amount withheld or retained in accordance with paragraph (d) of this clause until such time as the Contractor has determined and certified to the Contracting Officer that the subcontractor is entitled to the payment of such amount.

(i) Prime-subcontractor disputes. A dispute between the Contractor and subcontractor relating to the amount or entitlement of a subcontractor to a payment or a late payment interest penalty under a clause included in the subcontract pursuant to paragraph (c) of this clause does not constitute a dispute to which the United States is a party. The United States may not be interpleaded in any judicial or administrative proceeding involving such a dispute.

(j) Preservation of prime-subcontractor rights. Except as provided in paragraph (i) of this clause, this clause shall not limit or impair any contractual, administrative, or judicial remedies otherwise available to the Contractor or a subcontractor in the event of a dispute involving late payment or nonpayment by the Contractor or deficient subcontract performance or nonperformance by a subcontractor.

(k) Non-recourse for prime contractor interest penalty. The Contractor's obligation to pay an interest penalty to a subcontractor pursuant to the clauses included in a subcontract under paragraph (c) of this clause shall not be construed to be an obligation of the United States for such interest penalty. A cost-reimbursement claim may not include any amount for reimbursement of such interest penalty.

(End of clause)

62 52.232-7009 PAYMENT BY ELECTRONIC FUNDS TRANSFER (CCR) (JUN 1998)

(a) Method of payment. (1) All payments by the Government under this contract shall be made by electronic funds transfer (EFT), except as provided in paragraph (a)(2) of (b) of this clause. As used in this clause, the term "EFT" refers to the funds transfer and may also include the payment information transfer.

(2) In the event the Government is unable to release one or more payments by EFT, the Contractor agrees to either (i) accept payment by check or some other mutually agreeable method of payment, or (ii) request the Government to extend the payment due date until such time as the Government can make payment by EFT (but see paragraph (e) of this clause).

(b) Alternative contractor certification. If the Contractor certifies in writing, as part of its registration with the Central Contractor Registration (CCR) database that it does not have an account with a financial institution and does not have an authorized payment agent, payment shall be made by check to the remittance

address contained in the CCR database. All contractor certifications will expire on January 1, 1999.

(c) Contractor's EFT information. Except as provided in paragraph (b) of this clause, the Government shall make payment to the Contractor using the EFT information contained in the CCR database. In the event that the EFT information changes, the Contractor shall be responsible for providing the updated information to the CCR database.

(d) Mechanisms for EFT payment. The Government may make payment by EFT through either an Automated Clearing House subject to the banking laws of the United States or the Federal Reserve Wire Transfer System.

(e) Suspension of payment. If the Contractor's EFT information in the CCR database is incorrect and the Contractor has not certified under paragraph (b) of this clause, the Government need not make payment to the Contractor under this contract until correct EFT information or certification is entered into the CCR database; and any invoice or contract financing request shall be deemed not to be a proper invoice for the purpose of prompt payment under this contract. The prompt payment terms of the contract regarding notice of an improper invoice and delays in accrual of interest penalties apply.

(f) Contractor EFT arrangements. If the Contractor has identified multiple payment receiving points (i.e., more than one remittance address or EFT information set) in the CCR database, and the Contractor has not notified the Government of the payment receiving point applicable to this contract, the Government shall make payment to the first payment receiving point (EFT information set or remittance address as applicable) listed in the CCR database.

(g) Liability for uncompleted or erroneous transfers. (1) If an uncompleted or erroneous transfer occurs because the Government failed to use the Contractor's EFT information in the correct manner, the Government remains responsible for--

(i) Making a correct payment;

(ii) Paying any prompt payment penalty due; and

(iii) Recovering any erroneously directed funds.

(2) If an uncompleted or erroneous transfer occurs because the Contractor's EFT information was incorrect, or was revised within 30 days of Government release of the EFT payment transaction instruction to the Federal Reserve System, and--

(i) If the funds are no longer under the control of the payment office, the Government is deemed to have made payment and the contractor is responsible for recovery of any erroneously directed funds; or

(ii) If the funds remain under the control of the payment office, the Government shall not make payment, and the provisions of paragraph (e) of this clause shall apply.

(h) EFT and prompt payment. A payment shall be deemed to have been made in a timely manner in accordance with the prompt payment terms of this contract if, in the EFT payment transaction instruction released to the Federal Reserve System, the date specified for settlement of the payment is on or before the prompt payment due date, provided the specified payment date is a valid date under the rules of the Federal Reserve System.

(i) EFT and assignment of claims. If the Contractor assigns the proceeds of this contract as provided for in the assignment of claims terms of this contract, the Contractor shall require as a condition of any such assignment, that the assignee register in the CCR database and be paid by EFT in accordance with the terms of this clause. In all respects, the requirements of this clause shall apply to the assignee as if it were the Contractor. EFT information that shows the ultimate recipient of the transfer to be other than the Contractor, in the absence of a proper assignment of claims acceptable to the Government, is incorrect EFT information within the meaning of paragraph (e) of this clause.

(j) Liability for change of EFT information by financial agent. The Government is not liable for errors resulting from changes to EFT information made by the Contractor's financial agent.

(k) Payment information. The payment or disbursing office shall forward to the Contractor available payment information that is suitable for transmission as of the date of release of the EFT instruction to the Federal Reserve System. The Government may

request the Contractor to designate a desired format and method(s) for delivery of payment information from a list of formats and methods the payment office is capable of executing. However, the Government does not guarantee that any particular format or method of delivery is available at any particular payment office and retains the latitude to use the format and delivery method most convenient to the Government. If the Contractor has certified in accordance with paragraph (b) of this clause or if the Government otherwise makes payment by check in accordance with paragraph (a) of this clause, the Government shall mail the payment information to the remittance address contained in the CCR database.

(End of clause)

63 52.233-1 I DISPUTES (OCT 1995)--ALTERNATE I (DEC 1991)

(a) This contract is subject to the Contract Disputes Act of 1978, as amended (41 U.S.C. 601-613).

(b) Except as provided in the Act, all disputes arising under or relating to this contract shall be resolved under this clause.

(c) "Claim," as used in this clause, means a written demand or written assertion by one of the contracting parties seeking, as a matter of right, the payment of money in a sum certain, the adjustment or interpretation of contract terms, or other relief arising under or relating to this contract. A claim arising under a contract, unlike a claim relating to that contract, is a claim that can be resolved under a contract clause that provides for the relief sought by the claimant. However, a written demand or written assertion by the Contractor seeking the payment of money exceeding $100,000 is not a claim under the Act until certified as required by subparagraph (d)(2) of this clause. A voucher, invoice, or other routine request for payment that is not in dispute when submitted is not a claim under the Act. The submission may be converted to a claim under the Act, by complying with the submission and certification requirements of this clause, if it is disputed either as to liability or amount or is not acted upon in a reasonable time.

(d)(1) A claim by the Contractor shall be made in writing and, unless otherwise stated in this contract, submitted within 6 years after accrual of the claim to the Contracting Officer for a written decision. A claim by the Government against the Contractor shall be subject to a written decision by the Contracting Officer.

(2)(i) Contractors shall provide the certification specified in subparagraph (d)(2)(iii) of this clause when submitting any claim--

(A) Exceeding $100,000; or

(B) Regardless of the amount claimed, when using--

(1) Arbitration conducted pursuant to 5 U.S.C. 575-580; or

(2) Any other alternative means of dispute resolution (ADR) technique that the agency elects to handle in accordance with the Administrative Dispute Resolution Act (ADRA).

(ii) The certification requirement does not apply to issues in controversy that have not been submitted as all or part of a claim.

(iii) The certification shall state as follows:

"I certify that the claim is made in good faith; that the supporting data are accurate and complete to the best of my knowledge and belief; that the amount requested accurately reflects the contract adjustment for which the Contractor believes the Government is liable; and that I am duty authorized to certify the claim on behalf of the Contractor."

(3) The certification may be executed by any person duly authorized to bind the Contractor with respect to the claim.

(e) For Contractor claims of $100,000 or less, the Contracting Officer must, if requested in writing by the Contractor, render a decision within 60 days of the request. For Contractor-certified claims over $100,000, the Contracting Officer must, within 60 days, decide the claim or notify the Contractor of the date by which the decision will be made.

(f) The Contracting Officer's decision shall be final unless the Contractor appeals or files a suit as provided in the Act.

(g) If the claim by the Contractor is submitted to the Contracting Officer or a claim by the Government is presented to the Contractor, the parties, by mutual consent, may agree to use ADR. If the Contractor refuses an offer for alternative disputes resolution, the Contractor shall inform the Contracting Officer, in writing, of the Contractor's specific reasons for rejecting the request. When using arbitration conducted

pursuant to 5 U.S.C. 575-580, or when using any other ADR technique that the agency elects to handle in accordance with the ADRA, any claim, regardless of amount, shall be accompanied by the certification described in subparagraph (d)(2)(iii) of this clause, and executed in accordance with subparagraph (d)(3) of this clause.

(h) The Government shall pay interest on the amount found due and unpaid from (1) the date that the Contracting Officer receives the claim (certified, if required); or (2) the date that payment otherwise would be due, if that date is later, until the date of payment. With regard to claims having defective certifications, as defined in (FAR) 48 CFR 33.201, interest shall be paid from the date that the Contracting Officer initially receives the claim. Simple interest on claims shall be paid at the rate, fixed by the Secretary of the Treasury as provided in the Act, which is applicable to the period during which the Contracting Officer receives the claim and then at the rate applicable for each 6-month period as fixed by the Treasury Secretary during the pendency of the claim.

(i) The Contractor shall proceed diligently with performance of this contract, pending final resolution of any request for relief, claim, appeal, or action arising under or relating to the contract, and comply with any decision of the Contracting Officer.

(End of clause)

64 52.233-3 PROTEST AFTER AWARD (AUG 1996)

(a) Upon receipt of a notice of protest (as defined in FAR 33.101) or a determination that a protest is likely (see FAR 33.102(d)), the Contracting Officer may, by written order to the Contractor, direct the Contractor to stop performance of the work called for by this contract. The order shall be specifically identified as a stop-work order issued under this clause. Upon receipt of the order, the Contractor shall immediately comply with its terms and take all reasonable steps to minimize the incurrence of costs allocable to the work covered by the order during the period of work stoppage. Upon receipt of the final decision in the protest, the Contracting Officer shall either--

(1) Cancel the stop-work order; or

(2) Terminate the work covered by the order as provided in the Default, or the Termination for Convenience of the Government, clause of this contract.

(b) If a stop-work order issued under this clause is canceled either before or after a final decision in the protest, the Contractor shall resume work. The Contracting Officer shall make an equitable adjustment in the delivery schedule or contract price, or both, and the contract shall be modified, in writing, accordingly, if--

(1) The stop-work order results in an increase in the time required for, or in the Contractor's cost properly allocable to, the performance of any part of this contract; and

(2) The Contractor asserts its right to an adjustment within 30 days after the end of the period of work stoppage; provided, that if the Contracting Officer decides the facts justify the action, the Contracting Officer may receive and act upon a proposal at any time before final payment under this contract.

(c) If a stop-work order is not canceled and the work covered by the order is terminated for the convenience of the Government, the Contracting Officer shall allow reasonable costs resulting from the stop-work order in arriving at the termination settlement.

(d) If a stop-work order is not canceled and the work covered by the order is terminated for default, the Contracting Officer shall allow, by equitable adjustment or otherwise, reasonable costs resulting from the stop-work order.

(e) The Government's rights to terminate this contract at any time are not affected by action taken under this clause.

(f) If, as the result of the Contractor's intentional or negligent misstatement, misrepresentation, or miscertification, a protest related to this contract is sustained, and the Government pays costs, as provided in FAR 33.102(b)(2) or 33.104(h)(1), the Government may require the Contractor to reimburse the Government the amount of such costs. In addition to any other remedy available, and pursuant to the requirements of Subpart 32.6, the Government may collect this debt by offsetting the amount against any payment due the Contractor under any contract between the Contractor and the Government.

(End of clause)

65 52.236-2 DIFFERING SITE CONDITIONS (APR 1984)

(a) The Contractor shall promptly, and before the conditions are disturbed, give a written notice to the Contracting Officer of (1) subsurface or latent physical conditions at the site which differ materially from those indicated in this contract, or (2) unknown physical conditions at the site, of an unusual nature, which differ materially from those ordinarily encountered and generally recognized as inhering in work of the character provided for in the contract.

(b) The Contracting Officer shall investigate the site conditions promptly after receiving the notice. If the conditions do materially so differ and cause an increase or decrease in the Contractor's cost of, or the time required for, performing any part of the work under this contract, whether or not changed as a result of the conditions, an equitable adjustment shall be made under this clause and the contract modified in writing accordingly.

(c) No request by the Contractor for an equitable adjustment to the contract under this clause shall be allowed, unless the Contractor has given the written notice required; provided, that the time prescribed in (a) above for giving written notice may be extended by the Contracting Officer.

(d) No request by the Contractor for an equitable adjustment to the contract for differing site conditions shall be allowed if made after final payment under this contract.

(End of clause)

66 52.236-3 SITE INVESTIGATION AND CONDITIONS AFFECTING THE WORK (APR 1984)

(a) The Contractor acknowledges that it has taken steps reasonably necessary to ascertain the nature and location of the work, and that it has investigated and satisfied itself as to the general and local conditions which can affect the work or its cost, including but not limited to (1) conditions bearing upon transportation, disposal, handling, and storage of materials; (2) the availability of labor, water, electric power, and roads; (3) uncertainties of weather, river stages, tides, or similar physical conditions at the site; (4) the conformation and conditions of the ground; and (5) the character of equipment and facilities needed preliminary to and during work performance. The Contractor also acknowledges that it has satisfied itself as to the character, quality, and quantity of surface and subsurface materials or obstacles to be encountered insofar as this information is reasonably ascertainable from an inspection of the site, including all exploratory work done by the Government, as well as from the drawings and specifications made a part of this contract. Any failure of the Contractor to take the actions described and acknowledged in this paragraph will not relieve the Contractor from responsibility for estimating properly the difficulty and cost of successfully performing the work, or for proceeding to successfully perform the work without additional expense to the Government.

(b) The Government assumes no responsibility for any conclusions or interpretations made by the Contractor based on the information made available by the Government. Nor does the Government assume responsibility for any understanding reached or representation made concerning conditions which can affect the work by any of its officers or agents before the execution of this contract, unless that understanding or representation is expressly stated in this contract.

(End of clause)

67 52.236-5 MATERIAL AND WORKMANSHIP (APR 1984)

(a) All equipment, material, and articles incorporated into the work covered by this contract shall be new and of the most suitable grade for the purpose intended, unless otherwise specifically provided in this contract. References in the specifications to equipment, material, articles, or patented processes by trade name, make, or catalog number, shall be regarded as establishing a standard of quality and shall not be construed as limiting competition. The Contractor may, at its option,

use any equipment, material, article, or process that, in the judgment of the Contracting Officer, is equal to that named in the specifications, unless otherwise specifically provided in this contract.

(b) The Contractor shall obtain the Contracting Officer's approval of the machinery and mechanical and other equipment to be incorporated into the work. When requesting approval, the Contractor shall furnish to the Contracting Officer the name of the manufacturer, the model number, and other information concerning the performance, capacity, nature, and rating of the machinery and mechanical and other equipment. When required by this contract or by the Contracting Officer, the Contractor shall also obtain the Contracting Officer's approval of the material or articles which the Contractor contemplates incorporating into the work. When requesting approval, the Contractor shall provide full information concerning the material or articles. When directed to do so, the Contractor shall submit samples for approval at the Contractor's expense, with all shipping charges prepaid. Machinery, equipment, material, and articles that do not have the required approval shall be installed or used at the risk of subsequent rejection.

(c) All work under this contract shall be performed in a skillful and workmanlike manner. The Contracting Officer may require, in writing, that the Contractor remove from the work any employee the Contracting Officer deems incompetent, careless, or otherwise objectionable.

(End of clause)

(R 7-602.9 1964 JUN)

68 52.236-6 SUPERINTENDENCE BY THE CONTRACTOR (APR 1984)

At all times during performance of this contract and until the work is completed and accepted, the Contractor shall directly superintend the work or assign and have on the work site a competent superintendent who is satisfactory to the Contracting Officer and has authority to act for the Contractor.

(End of clause)

69 52.236-7 PERMITS AND RESPONSIBILITIES (NOV 1991)

The Contractor shall, without additional expense to the Government, be responsible for obtaining any necessary licenses and permits, and for complying with any Federal, State, and municipal laws, codes, and regulations applicable to the performance of the work. The Contractor shall also be responsible for all damages to persons or property that occur as a result of the Contractor's fault or negligence. The Contractor shall also be responsible for all materials delivered and work performed until completion and acceptance of the entire work, except for any completed unit of work which may have been accepted under the contract.

(End of clause)

70 52.236-8 OTHER CONTRACTS (APR 1984)

The Government may undertake or award other contracts for additional work at or near the site of the work under this contract. The Contractor shall fully cooperate with the other contractors and with Government employees and shall carefully adapt scheduling and performing the work under this contract to accommodate the additional work, heeding any direction that may be provided by the Contracting Officer. The Contractor shall not commit or permit any act that will interfere with the performance of work by any other contractor or by Government employees.

(End of clause)

71 52.236-9 PROTECTION OF EXISTING VEGETATION, STRUCTURES, EQUIPMENT, UTILITIES, AND IMPROVEMENTS (APR 1984)

(a) The Contractor shall preserve and protect all structures, equipment, and vegetation (such as trees, shrubs, and grass) on or adjacent to the work site, which are not to be removed and which do not unreasonably interfere with the work required under this contract. The Contractor shall only remove trees when specifically authorized to do so, and shall avoid damaging vegetation that will remain in place. If any limbs or

branches of trees are broken during contract performance, or by the careless operation of equipment, or by workmen, the Contractor shall trim those limbs or branches with a clean cut and paint the cut with a tree-pruning compound as directed by the Contracting Officer.

(b) The Contractor shall protect from damage all existing improvements and utilities (1) at or near the work site, and (2) on adjacent property of a third party, the locations of which are made known to or should be known by the Contractor. The Contractor shall repair any damage to those facilities, including those that are the property of a third party, resulting from failure to comply with the requirements of this contract or failure to exercise reasonable care in performing the work. If the Contractor fails or refuses to repair the damage promptly, the Contracting Officer may have the necessary work performed and charge the cost to the Contractor.

(End of clause)

72 52.236-10 OPERATIONS AND STORAGE AREAS (APR 1984)

(a) The Contractor shall confine all operations (including storage of materials) on Government premises to areas authorized or approved by the Contracting Officer. The Contractor shall hold and save the Government, its officers and agents, free and harmless from liability of any nature occasioned by the Contractor's performance.

(b) Temporary buildings (e.g., storage sheds, shops, offices) and utilities may be erected by the Contractor only with the approval of the Contracting Officer and shall be built with labor and materials furnished by the Contractor without expense to the Government. The temporary buildings and utilities shall remain the property of the Contractor and shall be removed by the Contractor at its expense upon completion of the work. With the written consent of the Contracting Officer, the buildings and utilities may be abandoned and need not be removed.

(c) The Contractor shall, under regulations prescribed by the Contracting Officer, use only established roadways, or use temporary roadways constructed by the Contractor when and as authorized by the Contracting Officer. When materials are transported in prosecuting the work, vehicles shall not be loaded beyond the loading capacity recommended by the manufacturer of the vehicle or prescribed by any Federal, State, or local law or regulation. When it is necessary to cross curbs or sidewalks, the Contractor shall protect them from damage. The Contractor shall repair or pay for the repair of any damaged curbs, sidewalks, or roads.

(End of clause)

73 52.236-11 USE AND POSSESSION PRIOR TO COMPLETION (APR 1984)

(a) The Government shall have the right to take possession of or use any completed or partially completed part of the work. Before taking possession of or using any work, the Contracting Officer shall furnish the Contractor a list of items of work remaining to be performed or corrected on those portions of the work that the Government intends to take possession of or use. However, failure of the Contracting Officer to list any item of work shall not relieve the Contractor of responsibility for complying with the terms of the contract. The Government's possession or use shall not be deemed an acceptance of any work under the contract.

(b) While the Government has such possession or use, the Contractor shall be relieved of the responsibility for the loss of or damage to the work resulting from the Government's possession or use, notwithstanding the terms of the clause in this contract entitled "Permits and Responsibilities." If prior possession or use by the Government delays the progress of the work or causes additional expense to the Contractor, an equitable adjustment shall be made in the contract price or the time of completion, and the contract shall be modified in writing accordingly.

(End of clause)

74 52.236-12 CLEANING UP (APR 1984)

The Contractor shall at all times keep the work area, including storage areas, free from accumulations of waste materials. Before completing the work, the Contractor shall remove from the work and premises any rubbish, tools, scaffolding, equipment, and materials that are not the property of the Government. Upon completing the work, the Contractor shall leave the work area in a clean, neat, and orderly condition satisfactory to the Contracting Officer.

(End of clause)

75 52.236-13 ACCIDENT PREVENTION (NOV 1991)

(a) The Contractor shall provide and maintain work environments and procedures which will (1) safeguard the public and Government personnel, property, materials, supplies, and equipment exposed to Contractor operations and activities; (2) avoid interruptions of Government operations and delays in project completion dates; and (3) control costs in the performance of this contract.

(b) For these purposes on contracts for construction or dismantling, demolition, or removal of improvements, the Contractor shall--

(1) Provide appropriate safety barricades, signs, and signal lights;

(2) Comply with the standards issued by the Secretary of Labor at 29 CFR Part 1926 and 29 CFR Part 1910; and

(3) Ensure that any additional measures the Contracting Officer determines to be reasonably necessary for the purposes are taken.

(c) If this contract is for construction or dismantling, demolition or removal of improvements with any Department of Defense agency or component, the Contractor shall comply with all pertinent provisions of the latest version of U.S. Army Corps of Engineers Safety and Health Requirements Manual, EM 385-1-1, in effect on the date of the solicitation.

(d) Whenever the Contracting Officer becomes aware of any noncompliance with these requirements or any condition which poses a serious or imminent danger to the health or safety of the public or Government personnel, the Contracting Officer shall notify the Contractor orally, with written confirmation, and request immediate initiation of corrective action. This notice, when delivered to the Contractor or the Contractor's representative at the work site, shall be deemed sufficient notice of the noncompliance and that corrective action is required. After receiving the notice, the Contractor shall immediately take corrective action. If the Contractor fails or refuses to promptly take corrective action, the Contracting Officer may issue an order stopping all or part of the work until satisfactory corrective action has been taken. The Contractor shall not be entitled to any equitable adjustment of the contract price or extension of the performance schedule on any stop work order issued under this clause.

(e) The Contractor shall insert this clause, including this paragraph (e), with appropriate changes in the designation of the parties, in subcontracts.

(End of clause)

76 52.236-14 AVAILABILITY AND USE OF UTILITY SERVICES (APR 1984)

(a) The Government shall make all reasonably required amounts of utilities available to the Contractor from existing outlets and supplies, as specified in the contract. Unless otherwise provided in the contract, the amount of each utility service consumed shall be charged to or paid for by the Contractor at prevailing rates charged to the Government or, where the utility is produced by the Government, at reasonable rates determined by the Contracting Officer. The Contractor shall carefully conserve any utilities furnished without charge.

(b) The Contractor, at its expense and in a workmanlike manner satisfactory to the Contracting Officer, shall install and maintain all necessary temporary connections and distribution lines, and all meters required to measure the amount of each utility used for the purpose of determining charges. Before final acceptance of the work by the Government, the Contractor shall remove all the temporary connections, distribution lines, meters, and associated paraphernalia.

(End of clause)

(R 7-603.30 1967 APR)

(R 7-2102.4 1976 OCT)

77 52.236-15 SCHEDULES FOR CONSTRUCTION CONTRACTS (APR 1984)

(a) The Contractor shall, within five days after the work commences on the contract or another period of time determined by the Contracting Officer, prepare and submit to the Contracting Officer for approval three copies of a practicable schedule showing the order in which the Contractor proposes to perform the work, and the dates on which the Contractor contemplates starting and completing the several salient features of the work (including acquiring materials, plant, and equipment). The schedule shall be in the form of a progress chart of suitable scale to indicate appropriately the percentage of work scheduled for completion by any given date during the period. If the Contractor fails to submit a schedule within the time prescribed, the Contracting Officer may withhold approval of progress payments until the Contractor submits the required schedule.

(b) The Contractor shall enter the actual progress on the chart as directed by the Contracting Officer, and upon doing so shall immediately deliver three copies of the annotated schedule to the Contracting Officer. If, in the opinion of the Contracting Officer, the Contractor falls behind the approved schedule, the Contractor shall take steps necessary to improve its progress, including those that may be required by the Contracting Officer, without additional cost to the Government. In this circumstance, the Contracting Officer may require the Contractor to increase the number of shifts, overtime operations, days of work, and/or the amount of construction plant, and to submit for approval any supplementary schedule or schedules in chart form as the Contracting Officer deems necessary to demonstrate how the approved rate of progress will be regained.

(c) Failure of the Contractor to comply with the requirements of the Contracting Officer under this clause shall be grounds for a determination by the Contracting Officer that the Contractor is not prosecuting the work with sufficient diligence to ensure completion within the time specified in the contract. Upon making this determination, the Contracting Officer may terminate the Contractor's right to proceed with the work, or any separable part of it, in accordance with the default terms of this contract.

(End of clause)

78 52.236-21 SPECIFICATIONS AND DRAWINGS FOR CONSTRUCTION (FEB 1997)

(a) The Contractor shall keep on the work site a copy of the drawings and specifications and shall at all times give the Contracting Officer access thereto. Anything mentioned in the specifications and not shown on the drawings, or shown on the drawings and not mentioned in the specifications, shall be of like effect as if shown or mentioned in both. In case of difference between drawings and specifications, the specifications shall govern. In case of discrepancy in the figures, in the drawings, or in the specifications, the matter shall be promptly submitted to the Contracting Officer, who shall promptly make a determination in writing. Any adjustment by the Contractor without such a determination shall be at its own risk and expense. The Contracting Officer shall furnish from time to time such detailed drawings and other information as considered necessary, unless otherwise provided.

(b) Wherever in the specifications or upon the drawings the words "directed", "required", "ordered", "designated", "prescribed", or words of like import are used, it shall be understood that the "direction", "requirement", "order", "designation", or "prescription", of the Contracting Officer is intended and similarly the words "approved", "acceptable", "satisfactory", or words of like import shall mean "approved by", or "acceptable to", or "satisfactory to" the Contracting Officer, unless otherwise expressly stated.

(c) Where "as shown," "as indicated", "as detailed", or words of similar import are used, it shall be understood that the reference is made to the drawings accompanying this contract unless stated otherwise. The word "provided" as used herein shall be understood to mean "provide complete in place," that is "furnished and installed".

(d) Shop drawings means drawings, submitted to the Government by the Contractor, subcontractor, or any lower tier subcontractor pursuant to a construction contract, showing in detail (1) the proposed fabrication and assembly of structural elements, and (2) the installation (i.e., fit, and attachment details) of materials or equipment. It includes drawings,

diagrams, layouts, schematics, descriptive literature, illustrations, schedules, performance and test data, and similar materials furnished by the contractor to explain in detail specific portions of the work required by the contract. The Government may duplicate, use, and disclose in any manner and for any purpose shop drawings delivered under this contract.

(e) If this contract requires shop drawings, the Contractor shall coordinate all such drawings, and review them for accuracy, completeness, and compliance with contract requirements and shall indicate its approval thereon as evidence of such coordination and review. Shop drawings submitted to the Contracting Officer without evidence of the Contractor's approval may be returned for resubmission. The Contracting Officer will indicate an approval or disapproval of the shop drawings and if not approved as submitted shall indicate the Government's reasons therefor. Any work done before such approval shall be at the Contractor's risk. Approval by the Contracting Officer shall not relieve the Contractor from responsibility for any errors or omissions in such drawings, nor from responsibility for complying with the requirements of this contract, except with respect to variations described and approved in accordance with (f) below.

(f) If shop drawings show variations from the contract requirements, the Contractor shall describe such variations in writing, separate from the drawings, at the time of submission. If the Contracting Officer approves any such variation, the Contracting Officer shall issue an appropriate contract modification, except that, if the variation is minor or does not involve a change in price or in time of performance, a modification need not be issued.

(g) The Contractor shall submit to the Contracting Officer for approval four copies (unless otherwise indicated) of all shop drawings as called for under the various headings of these specifications. Three sets (unless otherwise indicated) of all shop drawings, will be retained by the Contracting Officer and one set will be returned to the Contractor.

(End of clause)

79 52.236-26 PRECONSTRUCTION CONFERENCE (FEB 1995)

If the Contracting Officer decides to conduct a preconstruction conference, the successful offeror will be notified and will be required to attend. The Contracting Officer's notification will include specific details regarding the date, time, and location of the conference, any need for attendance by subcontractors, and information regarding the items to be discussed.

(End of clause)

80 52.236-7000 MODIFICATION PROPOSALS--PRICE BREAKDOWN (DEC 1991)

(a) The Contractor shall furnish a price breakdown, itemized as required and within the time specified by the Contracting Officer, with any proposal for a contract modification.

(b) The price breakdown--

(1) Must include sufficient detail to permit an analysis of profit, and of all costs for--

(i) Material;

(ii) Labor;

(iii) Equipment;

(iv) Subcontracts; and

(v) Overhead; and

(2) Must cover all work involved in the modification, whether the work was deleted, added, or changed.

(c) The Contractor shall provide similar price breakdowns to support any amounts claimed for subcontracts.

(d) The Contractor's proposal shall include a justification for any time extension proposed.

(End of clause)

81 52.242-13 BANKRUPTCY (JUL 1995)

In the event the Contractor enters into proceedings relating to bankruptcy, whether voluntary or involuntary, the Contractor agrees to

furnish, by certified mail or electronic commerce method authorized by the contract, written notification of the bankruptcy to the Contracting Officer responsible for administering the contract. This notification shall be furnished within five days of the initiation of the proceedings relating to bankruptcy filing. This notification shall include the date on which the bankruptcy petition was filed, the identity of the court in which the bankruptcy petition was filed, and a listing of Government contract numbers and contracting offices for all Government contracts against which final payment has not been made. This obligation remains in effect until final payment under this contract. (End of clause)

82 52.242-14 SUSPENSION OF WORK (APR 1984)

(a) The Contracting Officer may order the Contractor, in writing, to suspend, delay, or interrupt all or any part of the work of this contract for the period of time that the Contracting Officer determines appropriate for the convenience of the Government.

(b) If the performance of all or any part of the work is, for an unreasonable period of time, suspended, delayed, or interrupted (1) by an act of the Contracting Officer in the administration of this contract, or (2) by the Contracting Officer's failure to act within the time specified in this contract (or within a reasonable time if not specified), an adjustment shall be made for any increase in the cost of performance of this contract (excluding profit) necessarily caused by the unreasonable suspension, delay, or interruption, and the contract modified in writing accordingly. However, no adjustment shall be made under this clause for any suspension, delay, or interruption to the extent that performance would have been so suspended, delayed, or interrupted by any other cause, including the fault or negligence of the Contractor, or for which an equitable adjustment is provided for or excluded under any other term or condition of this contract.

(c) A claim under this clause shall not be allowed (1) for any costs incurred more than 20 days before the Contractor shall have notified the Contracting Officer in writing of the act or failure to act involved (but this requirement shall not apply as to a claim resulting from a suspension order), and (2) unless the claim, in an amount stated, is asserted in writing as soon as practicable after the termination of the suspension, delay, or interruption, but not later than the date of final payment under the contract.

(End of clause)

83 52.243-4 CHANGES (AUG 1987)

(a) The Contracting Officer may, at any time, without notice to the sureties, if any, by written order designated or indicated to be a change order, make changes in the work within the general scope of the contract, including changes--

(1) In the specifications (including drawings and designs);

(2) In the method or manner of performance of the work;

(3) In the Government-furnished facilities, equipment, materials, services, or site; or

(4) Directing acceleration in the performance of the work.

(b) Any other written or oral order (which, as used in this paragraph (b), includes direction, instruction, interpretation, or determination) from the Contracting Officer that causes a change shall be treated as a change order under this clause; provided, that the Contractor gives the Contracting Officer written notice stating (1) the date, circumstances, and source of the order and (2) that the Contractor regards the order as a change order.

(c) Except as provided in this clause, no order, statement, or conduct of the Contracting Officer shall be treated as a change under this clause or entitle the Contractor to an equitable adjustment.

(d) If any change under this clause causes an increase or decrease in the Contractor's cost of, or the time required for, the performance of any part of the work under this contract, whether or not changed by any such order, the Contracting Officer shall make an equitable adjustment and modify the contract in writing. However, except for an adjustment based on defective specifications, no adjustment for any change under paragraph (b) of this clause shall be made for any costs incurred more than 20 days before the

Contractor gives written notice as required. In the case of defective specifications for which the Government is responsible, the equitable adjustment shall include any increased cost reasonably incurred by the Contractor in attempting to comply with the defective specifications.

(e) The Contractor must assert its right to an adjustment under this clause within 30 days after (1) receipt of a written change order under paragraph (a) of this clause or (2) the furnishing of a written notice under paragraph (b) of this clause, by submitting to the Contracting Officer a written statement describing the general nature and amount of the proposal, unless this period is extended by the Government. The statement of proposal for adjustment may be included in the notice under paragraph (b) above.

(f) No proposal by the Contractor for an equitable adjustment shall be allowed if asserted after final payment under this contract.

(End of clause)

84 52.243-7001 PRICING OF CONTRACT MODIFICATIONS (DEC 1991)

When costs are a factor in any price adjustment under this contract, the contract cost principles and procedures in FAR Part 31 and DFARS Part 231, in effect on the date of this contract, apply.

(End of clause)

85 52.244-6 SUBCONTRACTS FOR COMMERCIAL ITEMS AND COMMERCIAL COMPONENTS (APR 1998)

(a) Definition.

"Commercial item," as used in this clause, has the meaning contained in the clause at 52.202-1, Definitions.

"Subcontract," as used in this clause, includes a transfer of commercial items between divisions, subsidiaries, or affiliates of the Contractor or subcontractor at any tier.

(b) To the maximum extent practicable, the Contractor shall incorporate, and require its subcontractors at all tiers to incorporate, commercial items or nondevelopmental items as components of items to be supplied under this contract.

(c) Notwithstanding any other clause of this contract, the Contractor is not required to include any FAR provision or clause, other than those listed below to the extent they are applicable and as may be required to establish the reasonableness of prices under Part 15, in a subcontract at any tier for commercial items or commercial components:

(1) 52.222-26, Equal Opportunity (E.O. 11246);

(2) 52.222-35, Affirmative Action for Disabled Veterans and Veterans of the Vietnam Era (38 U.S.C. 4212(a));

(3) 52.222-36, Affirmative Action for Handicapped Workers (29 U.S.C. 793); and

(4) 52.247-64, Preference for Privately Owned U.S.-Flagged Commercial Vessels (46 U.S.C. 1241) (flow down not required for subcontracts awarded beginning May 1, 1996).

(d) The Contractor shall include the terms of this clause, including this paragraph (d), in subcontracts awarded under this contract.

(End of clause)

86 52.246-12 INSPECTION OF CONSTRUCTION (AUG 1996)

(a) Definition. "Work" includes, but is not limited to, materials, workmanship, and manufacture and fabrication of components.

(b) The Contractor shall maintain an adequate inspection system and perform such inspections as will ensure that the work performed under the contract conforms to contract requirements. The Contractor shall maintain complete inspection records and make them available to the Government. All work shall be conducted under the general direction of the Contracting Officer and is subject to Government inspection and test at all places and at all reasonable times before acceptance to ensure strict compliance with the terms of the contract.

(c) Government inspections and tests are for the sole benefit of the Government and do not--

(1) Relieve the Contractor of responsibility for providing adequate

quality control measures;

(2) Relieve the Contractor of responsibility for damage to or loss of the material before acceptance;

(3) Constitute or imply acceptance; or

(4) Affect the continuing rights of the Government after acceptance of the completed work under paragraph (i) below.

(d) The presence or absence of a Government inspector does not relieve the Contractor from any contract requirement, nor is the inspector authorized to change any term or condition of the specification without the Contracting Officer's written authorization.

(e) The Contractor shall promptly furnish, at no increase in contract price, all facilities, labor, and material reasonably needed for performing such safe and convenient inspections and tests as may be required by the Contracting Officer. The Government may charge to the Contractor any additional cost of inspection or test when work is not ready at the time specified by the Contractor for inspection or test, or when prior rejection makes reinspection or retest necessary. The Government shall perform all inspections and tests in a manner that will not unnecessarily delay the work. Special, full size, and performance tests shall be performed as described in the contract.

(f) The Contractor shall, without charge, replace or correct work found by the Government not to conform to contract requirements, unless in the public interest the Government consents to accept the work with an appropriate adjustment in contract price. The Contractor shall promptly segregate and remove rejected material from the premises.

(g) If the Contractor does not promptly replace or correct rejected work, the Government may (1) by contract or otherwise, replace or correct the work and charge the cost to the Contractor or (2) terminate for default the Contractor's right to proceed.

(h) If, before acceptance of the entire work, the Government decides to examine already completed work by removing it or tearing it out, the Contractor, on request, shall promptly furnish all necessary facilities, labor, and material. If the work is found to be defective or nonconforming in any material respect due to the fault of the Contractor or its subcontractors, the Contractor shall defray the expenses of the examination and of satisfactory reconstruction. However, if the work is found to meet contract requirements, the Contracting Officer shall make an equitable adjustment for the additional services involved in the examination and reconstruction, including, if completion of the work was thereby delayed, an extension of time.

(i) Unless otherwise specified in the contract, the Government shall accept, as promptly as practicable after completion and inspection, all work required by the contract or that portion of the work the Contracting Officer determines can be accepted separately. Acceptance shall be final and conclusive except for latent defects, fraud, gross mistakes amounting to fraud, or the Government's rights under any warranty or guarantee.

(End of clause)

87 52.246-21 WARRANTY OF CONSTRUCTION (MAR 1994)

(a) In addition to any other warranties in this contract, the Contractor warrants, except as provided in paragraph (i) of this clause, that work performed under this contract conforms to the contract requirements and is free of any defect in equipment, material, or design furnished, or workmanship performed by the Contractor or any subcontractor or supplier at any tier.

(b) This warranty shall continue for a period of 1 year from the date of final acceptance of the work. If the Government takes possession of any part of the work before final acceptance, this warranty shall continue for a period of 1 year from the date the Government takes possession.

(c) The Contractor shall remedy at the Contractor's expense any failure to conform, or any defect. In addition, the Contractor shall remedy at the Contractor's expense any damage to Government-owned or controlled real or personal property, when that damage is the result of--

(1) The Contractor's failure to conform to contract requirements; or

(2) Any defect of equipment, material, workmanship, or design furnished.

(d) The Contractor shall restore any work damaged in fulfilling the terms and conditions of this clause. The Contractor's warranty with respect to work repaired or replaced will run for 1 year from the date of repair or

replacement.

(e) The Contracting Officer shall notify the Contractor, in writing, within a reasonable time after the discovery of any failure, defect, or damage.

(f) If the Contractor fails to remedy any failure, defect, or damage within a reasonable time after receipt of notice, the Government shall have the right to replace, repair, or otherwise remedy the failure, defect, or damage at the Contractor's expense.

(g) With respect to all warranties, express or implied, from subcontractors, manufacturers, or suppliers for work performed and materials furnished under this contract, the Contractor shall--

(1) Obtain all warranties that would be given in normal commercial practice;

(2) Require all warranties to be executed, in writing, for the benefit of the Government, if directed by the Contracting Officer; and

(3) Enforce all warranties for the benefit of the Government, if directed by the Contracting Officer.

(h) In the event the Contractor's warranty under paragraph (b) of this clause has expired, the Government may bring suit at its expense to enforce a subcontractor's, manufacturer's, or supplier's warranty.

(i) Unless a defect is caused by the negligence of the Contractor or subcontractor or supplier at any tier, the Contractor shall not be liable for the repair of any defects of material or design furnished by the Government nor for the repair of any damage that results from any defect in Government-furnished material or design.

(j) This warranty shall not limit the Government's rights under the Inspection and Acceptance clause of this contract with respect to latent defects, gross mistakes, or fraud.

(End of clause)

(R 7-604.4 1976 JUL)

88 52.248-3 VALUE ENGINEERING--CONSTRUCTION (MAR 1989)

(a) General. The Contractor is encouraged to develop, prepare, and submit value engineering change proposals (VECP's) voluntarily. The Contractor shall share in any instant contract savings realized from accepted VECP's, in accordance with paragraph (f) below.

(b) Definitions. "Collateral costs," as used in this clause, means agency costs of operation, maintenance, logistic support, or Government-furnished property.

"Collateral savings," as used in this clause, means those measurable net reductions resulting from a VECP in the agency's overall projected collateral costs, exclusive of acquisition savings, whether or not the acquisition cost changes.

"Contractor's development and implementation costs," as used in this clause, means those costs the Contractor incurs on a VECP specifically in developing, testing, preparing, and submitting the VECP, as well as those costs the Contractor incurs to make the contractual changes required by Government acceptance of a VECP.

"Government costs," as used in this clause, means those agency costs that result directly from developing and implementing the VECP, such as any net increases in the cost of testing, operations, maintenance, and logistic support. The term does not include the normal administrative costs of processing the VECP.

"Instant contract savings," as used in this clause, means the estimated reduction in Contractor cost of performance resulting from acceptance of the VECP, minus allowable Contractor's development and implementation costs, including subcontractors' development and implementation costs (see paragraph (h) below).

"Value engineering change proposal (VECP)" means a proposal that--

(1) Requires a change to this, the instant contract, to implement; and

(2) Results in reducing the contract price or estimated cost without impairing essential functions or characteristics; provided, that it does not involve a change--

(i) In deliverable end item quantities only; or

(ii) To the contract type only.

(c) VECP preparation. As a minimum, the Contractor shall include in each VECP the information described in subparagraphs (1) through (7) below. If the proposed change is affected by contractually required configuration management or similar procedures, the instructions in those

procedures relating to format, identification, and priority assignment shall govern VECP preparation. The VECP shall include the following:

(1) A description of the difference between the existing contract requirement and that proposed, the comparative advantages and disadvantages of each, a justification when an item's function or characteristics are being altered, and the effect of the change on the end item's performance.

(2) A list and analysis of the contract requirements that must be changed if the VECP is accepted, including any suggested specification revisions.

(3) A separate, detailed cost estimate for (i) the affected portions of the existing contract requirement and (ii) the VECP. The cost reduction associated with the VECP shall take into account the Contractor's allowable development and implementation costs, including any amount attributable to subcontracts under paragraph (h) below.

(4) A description and estimate of costs the Government may incur in implementing the VECP, such as test and evaluation and operating and support costs.

(5) A prediction of any effects the proposed change would have on collateral costs to the agency.

(6) A statement of the time by which a contract modification accepting the VECP must be issued in order to achieve the maximum cost reduction, noting any effect on the contract completion time or delivery schedule.

(7) Identification of any previous submissions of the VECP, including the dates submitted, the agencies and contract numbers involved, and previous Government actions, if known.

(d) Submission. The Contractor shall submit VECP's to the Resident Engineer at the worksite, with a copy to the Contracting Officer.

(e) Government action. (1) The Contracting Officer shall notify the Contractor of the status of the VECP within 45 calendar days after the contracting office receives it. If additional time is required, the Contracting Officer shall notify the Contractor within the 45-day period and provide the reason for the delay and the expected date of the decision. The Government will process VECP's expeditiously; however, it shall not be liable for any delay in acting upon a VECP.

(2) If the VECP is not accepted, the Contracting Officer shall notify the Contractor in writing, explaining the reasons for rejection. The Contractor may withdraw any VECP, in whole or in part, at any time before it is accepted by the Government. The Contracting Officer may require that the Contractor provide written notification before undertaking significant expenditures for VECP effort.

(3) Any VECP may be accepted, in whole or in part, by the Contracting Officer's award of a modification to this contract citing this clause. The Contracting Officer may accept the VECP, even though an agreement on price reduction has not been reached, by issuing the Contractor a notice to proceed with the change. Until a notice to proceed is issued or a contract modification applies a VECP to this contract, the Contractor shall perform in accordance with the existing contract. The Contracting Officer's decision to accept or reject all or part of any VECP shall be final and not subject to the Disputes clause or otherwise subject to litigation under the Contract Disputes Act of 1978 (41 U.S.C. 601-613).

(f) Sharing. (1) Rates. The Government's share of savings is determined by subtracting Government costs from instant contract savings and multiplying the result by (i) 45 percent for fixed-price contracts or (ii) 75 percent for cost-reimbursement contracts.

(2) Payment. Payment of any share due the Contractor for use of a VECP on this contract shall be authorized by a modification to this contract to--

(i) Accept the VECP;

(ii) Reduce the contract price or estimated cost by the amount of instant contract savings; and

(iii) Provide the Contractor's share of savings by adding the amount calculated to the contract price or fee.

(g) Collateral savings. If a VECP is accepted, the instant contract amount shall be increased by 20 percent of any projected collateral savings determined to be realized in a typical year of use after subtracting any Government costs not previously offset. However, the Contractor's share of collateral savings shall not exceed (1) the contract's firm-fixed-price or estimated cost, at the time the VECP is accepted, or (2) $100,000, whichever is greater. The Contracting Officer shall be the sole determiner of the amount of collateral savings, and that

amount shall not be subject to the Disputes clause or otherwise subject to litigation under 41 U.S.C. 601-613.

(h) Subcontracts. The Contractor shall include an appropriate value engineering clause in any subcontract of $50,000 or more and may include one in subcontracts of lesser value. In computing any adjustment in this contract's price under paragraph (f) above, the Contractor's allowable development and implementation costs shall include any subcontractor's allowable development and implementation costs clearly resulting from a VECP accepted by the Government under this contract, but shall exclude any value engineering incentive payments to a subcontractor. The Contractor may choose any arrangement for subcontractor value engineering incentive payments; provided, that these payments shall not reduce the Government's share of the savings resulting from the VECP.

(i) Data. The Contractor may restrict the Government's right to use any part of a VECP or the supporting data by marking the following legend on the affected parts:

"These data, furnished under the Value Engineering--Construction clause of contract _____, shall not be disclosed outside the Government or duplicated, used, or disclosed, in whole or in part, for any purpose other than to evaluate a value engineering change proposal submitted under the clause. This restriction does not limit the Government's right to use information contained in these data if it has been obtained or is otherwise available from the Contractor or from another source without limitations."

If a VECP is accepted, the Contractor hereby grants the Government unlimited rights in the VECP and supporting data, except that, with respect to data qualifying and submitted as limited rights technical data, the Government shall have the rights specified in the contract modification implementing the VECP and shall appropriately mark the data. (The terms "unlimited rights" and "limited rights" are defined in Part 27 of the Federal Acquisition Regulation.)

(End of clause)

89 52.248-7000 PREPARATION OF VALUE ENGINEERING CHANGE PROPOSALS \ (MAY 1994)

Prepare value engineering change proposals, for submission pursuant to the value engineering clause of this contract, in the format prescribed by the version of MIL-STD-973 in effect on the date of contract award.

(End of clause)

90 52.249-2 I TERMINATION FOR CONVENIENCE OF THE GOVERNMENT (FIXED-PRICE) (SEP 1996)- ALTERNATE I (SEP 1996)

(a) The Government may terminate performance of work under this contract in whole or, from time to time, in part if the Contracting Officer determines that a termination is in the Government's interest. The Contracting Officer shall terminate by delivering to the Contractor a Notice of Termination specifying the extent of termination and the effective date.

(b) After receipt of a Notice of Termination, and except as directed by the Contracting Officer, the Contractor shall immediately proceed with the following obligations, regardless of any delay in determining or adjusting any amounts due under this clause:

(1) Stop work as specified in the notice.

(2) Place no further subcontracts or orders (referred to as subcontracts in this clause) for materials, services, or facilities, except as necessary to complete the continued portion of the contract.

(3) Terminate all subcontracts to the extent they relate to the work terminated.

(4) Assign to the Government, as directed by the Contracting Officer, all right, title, and interest of the Contractor under the subcontracts terminated, in which case the Government shall have the right to settle or to pay any termination settlement proposal arising out of those terminations.

(5) With approval or ratification to the extent required by the Contracting Officer, settle all outstanding liabilities and termination settlement proposals arising from the termination of subcontracts; the approval or ratification will be final for purposes of this clause.

(6) As directed by the Contracting Officer, transfer title and deliver to the Government (i) the fabricated or unfabricated parts, work in process, completed work, supplies, and other material produced or acquired for the work terminated, and (ii) the completed or partially completed plans, drawings, information, and other property that, if the contract had been completed, would be required to be furnished to the Government.

(7) Complete performance of the work not terminated.

(8) Take any action that may be necessary, or that the Contracting Officer may direct, for the protection and preservation of the property related to this contract that is in the possession of the Contractor and in which the Government has or may acquire an interest.

(9) Use its best efforts to sell, as directed or authorized by the Contracting Officer, any property of the types referred to in subparagraph (b)(6) of this clause; provided, however, that the Contractor (i) is not required to extend credit to any purchaser and (ii) may acquire the property under the conditions prescribed by, and at prices approved by, the Contracting Officer. The proceeds of any transfer or disposition will be applied to reduce any payments to be made by the Government under this contract, credited to the price or cost of the work, or paid in any other manner directed by the Contracting Officer.

(c) The Contractor shall submit complete termination inventory schedules no later than 120 days from the effective date of termination, unless extended in writing by the Contracting Officer upon written request of the Contractor within this 120-day period.

(d) After expiration of the plant clearance period as defined in Subpart 45.6 of the Federal Acquisition Regulation, the Contractor may submit to the Contracting Officer a list, certified as to quantity and quality, of termination inventory not previously disposed of, excluding items authorized for disposition by the Contracting Officer. The Contractor may request the Government to remove those items or enter into an agreement for their storage. Within 15 days, the Government will accept title to those items and remove them or enter into a storage agreement. The Contracting Officer may verify the list upon removal of the items, or if stored, within 45 days from submission of the list, and shall correct the list, as necessary, before final settlement.

(e) After termination, the Contractor shall submit a final termination settlement proposal to the Contracting Officer in the form and with the certification prescribed by the Contracting Officer. The Contractor shall submit the proposal promptly, but no later than 1 year from the effective date of termination, unless extended in writing by the Contracting Officer upon written request of the Contractor within this 1 year period. However, if the Contracting Officer determines that the facts justify it, a termination settlement proposal may be received and acted on after 1 year or any extension. If the Contractor fails to submit the proposal within the time allowed, the Contracting Officer may determine, on the basis of information available, the amount, if any, due the Contractor because of the termination and shall pay the amount determined.

(f) Subject to paragraph (e) of this clause, the Contractor and the Contracting Officer may agree upon the whole or any part of the amount to be paid or remaining to be paid because of the termination. The amount may include a reasonable allowance for profit on work done. However, the agreed amount, whether under this paragraph (f) or paragraph (g) of this clause, exclusive of costs shown in subparagraph (g)(3) of this clause, may not exceed the total contract price as reduced by (1) the amount of payments previously made and (2) the contract price of work not terminated. The contract shall be modified, and the Contractor paid the agreed amount. Paragraph (g) of this clause shall not limit, restrict, or affect the amount that may be agreed upon to be paid under this paragraph.

(g) If the Contractor and Contracting Officer fail to agree on the whole amount to be paid the Contractor because of the termination of work, the Contracting Officer shall pay the Contractor the amounts determined as follows, but without duplication of any amounts agreed upon under paragraph (f) of this clause:

(1) For contract work performed before the effective date of termination, the total (without duplication of any items) of--

(i) The cost of this work;

(ii) The cost of settling and paying termination settlement proposals under terminated subcontracts that are properly chargeable to the terminated portion of the contract if not included in

subdivision (g)(1)(i) of this clause; and

(iii) A sum, as profit on subdivision (g)(1)(i) of this clause, determined by the Contracting Officer under 49.202 of the Federal Acquisition Regulation, in effect on the date of this contract, to be fair and reasonable; however, if it appears that the Contractor would have sustained a loss on the entire contract had it been completed, the Contracting Officer shall allow no profit under this subdivision (iii) and shall reduce the settlement to reflect the indicated rate of loss.

(2) The reasonable costs of settlement of the work terminated, including--

(i) Accounting, legal, clerical, and other expenses reasonably necessary for the preparation of termination settlement proposals and supporting data;

(ii) The termination and settlement of subcontracts (excluding the amounts of such settlements); and

(iii) Storage, transportation, and other costs incurred, reasonably necessary for the preservation, protection, or disposition of the termination inventory.

(h) Except for normal spoilage, and except to the extent that the Government expressly assumed the risk of loss, the Contracting Officer shall exclude from the amounts payable to the Contractor under paragraph (g) of this clause, the fair value, as determined by the Contracting Officer, of property that is destroyed, lost, stolen, or damaged so as to become undeliverable to the Government or to a buyer.

(i) The cost principles and procedures of Part 31 of the Federal Acquisition Regulation, in effect on the date of this contract, shall govern all costs claimed, agreed to, or determined under this clause.

(j) The Contractor shall have the right of appeal, under the Disputes clause, from any determination made by the Contracting Officer under paragraph (e), (g), or (l) of this clause, except that if the Contractor failed to submit the termination settlement proposal or request for equitable adjustment within the time provided in paragraph (e) or (l), respectively, and failed to request a time extension, there is no right of appeal.

(k) In arriving at the amount due the Contractor under this clause, there shall be deducted--

(1) All unliquidated advance or other payments to the Contractor under the terminated portion of this contract;

(2) Any claim which the Government has against the Contractor under this contract; and

(3) The agreed price for, or the proceeds of sale of, materials, supplies, or other things acquired by the Contractor or sold under the provisions of this clause and not recovered by or credited to the Government.

(l) If the termination is partial, the Contractor may file a proposal with the Contracting Officer for an equitable adjustment of the price(s) of the continued portion of the contract. The Contracting Officer shall make any equitable adjustment agreed upon. Any proposal by the Contractor for an equitable adjustment under this clause shall be requested within 90 days from the effective date of termination unless extended in writing by the Contracting Officer.

(m)(1) The Government may, under the terms and conditions it prescribes, make partial payments and payments against costs incurred by the Contractor for the terminated portion of the contract, if the Contracting Officer believes the total of these payments will not exceed the amount to which the Contractor will be entitled.

(2) If the total payments exceed the amount finally determined to be due, the Contractor shall repay the excess to the Government upon demand, together with interest computed at the rate established by the Secretary of the Treasury under 50 U.S.C. App. 1215(b)(2). Interest shall be computed for the period from the date the excess payment is received by the Contractor to the date the excess is repaid. Interest shall not be charged on any excess payment due to a reduction in the Contractor's termination settlement proposal because of retention or other disposition of termination inventory until 10 days after the date of the retention or disposition, or a later date determined by the Contracting Officer because of the circumstances.

(n) Unless otherwise provided in this contract or by statute, the Contractor shall maintain all records and documents relating to the terminated portion of this contract for 3 years after final settlement. This includes all books and other evidence bearing on the Contractor's

costs and expenses under this contract. The Contractor shall make these records and documents available to the Government, at the Contractor's office, at all reasonable times, without any direct charge. If approved by the Contracting Officer, photographs, microphotographs, or other authentic reproductions may be maintained instead of original records and documents.

(End of clause)

91 52.249-10 DEFAULT (FIXED-PRICE CONSTRUCTION) (APR 1984)

(a) If the Contractor refuses or fails to prosecute the work or any separable part, with the diligence that will insure its completion within the time specified in this contract including any extension, or fails to complete the work within this time, the Government may, by written notice to the Contractor, terminate the right to proceed with the work (or the separable part of the work) that has been delayed. In this event, the Government may take over the work and complete it by contract or otherwise, and may take possession of and use any materials, appliances, and plant on the work site necessary for completing the work. The Contractor and its sureties shall be liable for any damage to the Government resulting from the Contractor's refusal or failure to complete the work within the specified time, whether or not the Contractor's right to proceed with the work is terminated. This liability includes any increased costs incurred by the Government in completing the work.

(b) The Contractor's right to proceed shall not be terminated nor the Contractor charged with damages under this clause, if-

(1) The delay in completing the work arises from unforeseeable causes beyond the control and without the fault or negligence of the Contractor. Examples of such causes include (i) acts of God or of the public enemy, (ii) acts of the Government in either its sovereign or contractual capacity, (iii) acts of another Contractor in the performance of a contract with the Government, (iv) fires, (v) floods, (vi) epidemics, (vii) quarantine restrictions, (viii) strikes, (ix) freight embargoes, (x) unusually severe weather, or (xi) delays of subcontractors or suppliers at any tier arising from unforeseeable causes beyond the control and without the fault or negligence of both the Contractor and the subcontractors or suppliers; and

(2) The Contractor, within 10 days from the beginning of any delay (unless extended by the Contracting Officer), notifies the Contracting Officer in writing of the causes of delay. The Contracting Officer shall ascertain the facts and the extent of delay. If, in the judgment of the Contracting Officer, the findings of fact warrant such action, the time for completing the work shall be extended. The findings of the Contracting Officer shall be final and conclusive on the parties, but subject to appeal under the Disputes clause.

(c) If, after termination of the Contractor's right to proceed, it is determined that the Contractor was not in default, or that the delay was excusable, the rights and obligations of the parties will be the same as if the termination had been issued for the convenience of the Government.

(d) The rights and remedies of the Government in this clause are in addition to any other rights and remedies provided by law or under this contract.

(End of clause)

92 52.249-5000 BASIS FOR SETTLEMENT OF PROPOSALS

Actual costs will be used to determine equipment costs for a settlement proposal submitted on the total cost basis under FAR 49.206-2(b). In evaluating a terminations settlement proposal using the total cost basis, the following principiles will be applied to determine allowable equipment costs:

(1) Actual costs for each piece of equipment, or groups of similar serial or series equipment, need not be available in the contractor's accounting records to determine total actual equipment costs.

(2) If equipment costs have been allocated to a contract using predetermined rates , those charges will be adjusted to actual costs.

(3) Recorded job costs adjusted for unallowable expenses will be used to determine equipment operating expenses.

(4) Ownership costs (depreciation) will be determined using the

contractor's depreciation schedule (subject to the provisions of FAR 31.205-11).

(5) License, taxes, storage and insurance costs are normally recovered as an indirect expense and unless the contractor charges these costs directly to contracts, they will be recovered through the indirect expense rate.

(End of Statement)

93 52.252-4 ALTERATIONS IN CONTRACT (APR 1984)

Portions of this contract are altered as follows:

_____

(End of clause)
(R 7-105.1(a) 1949 JUL)

94 52.253-1 COMPUTER GENERATED FORMS (JAN 1991)

(a) Any data required to be submitted on a Standard or Optional Form prescribed by the Federal Acquisition Regulation (FAR) may be submitted on a computer generated version of the form, provided there is no change to the name, content, or sequence of the data elements on the form, and provided the form carries the Standard or Optional Form number and edition date.

(b) Unless prohibited by agency regulations, any data required to be submitted on an agency unique form prescribed by an agency supplement to the FAR may be submitted on a computer generated version of the form provided there is no change to the name, content, or sequence of the data elements on the form and provided the form carries the agency form number and edition date.

(c) If the Contractor submits a computer generated version of a form that is different than the required form, then the rights and obligations of the parties will be determined based on the content of the required form.

(End of clause)

END OF SECTION 00700

SECTION 00800

SPECIAL CLAUSES

TABLE OF CONTENTS

PARAGRAPH NO.	PARAGRAPH TITLE
SC-1	COMMENCEMENT, PROSECUTION, AND COMPLETION OF WORK
SC-1.1	OPTION FOR INCREASED QUANTITY
SC-2	LIQUIDATED DAMAGES - CONSTRUCTION
SC-3	DELETED - TIME EXTENSIONS
SC-4	DELETED - VARIATIONS IN ESTIMATED QUANTITIES - SUBDIVIDED ITEMS
SC-5	INSURANCE - WORK ON A GOVERNMENT INSTALLATION
SC-6	DELETED - CONTINUING CONTRACTS
SC-7	PERFORMANCE OF WORK BY THE CONTRACTOR
SC-8	PHYSICAL DATA
SC-9	DELETED - QUANTITY SURVEYS
SC-10	LAYOUT OF WORK
SC-11	DELETED - PAYMENT FOR MOBILIZATION AND PREPARATORY WORK
SC-12	AIRFIELD SAFETY PRECAUTIONS
SC-13	DELETED - IDENTIFICATION OF GOVERNMENT-FURNISHED PROPERTY
SC-14	EQUIPMENT OWNERSHIP AND OPERATING EXPENSE SCHEDULE
SC-15	PAYMENT FOR MATERIALS DELIVERED OFF-SITE
SC-16	DELETED - ORDER OF PRECEDENCE
SC-17	DELETED - LIMITATION OF PAYMENT FOR DESIGN
SC-18	CONTRACT DRAWINGS, MAPS AND SPECIFICATIONS
SC-19	DELETED - TECHNICAL PROPOSAL - COPIES TO BE FURNISHED UPON AWARD
SC-20	DELETED - COMPLIANCE CERTIFICATION
SC-21	DELETED - VALUE ENGINEERING
SC-22	EPA ENERGY STAR
SC-23	YEAR 2000 COMPLIANCE

SPECIAL CLAUSES

SC-1. COMMENCEMENT, PROSECUTION, AND COMPLETION OF WORK (APR 1984) (FAR 52.211-10).

The Contractor shall be required to (a) commence work under this Contract within 10 calendar days after the date the Contractor receives the notice to proceed, (b) prosecute the work diligently, and (c) complete the entire work ready for use as follows:

(a) For Base Items 0001 and 0002 and Optional Items 0003 through 0005:
360 calendar days after the date of receipt by the Contractor of notice to proceed for Base Items;

(b) For Optional Item 0006:
120 calendar days after the date of receipt by the Contractor of notice to proceed for Optional Item 0006.

The time stated for completion shall include final cleanup of the premises.

SC-1.1 OPTION FOR INCREASED QUANTITY

a. The Government may increase the quantity of work awarded by exercising one or more of the Optional Bid Items 0003, 0004, 0005 or 0006 at any time, or not at all, but no later than:

(1) For Optional Items 0003 through 0005:
90 calendar days after receipt by Contractor of notice to proceed for Base Bid Items;

(2) For Optional Item 0006;
360 calendar days after receipt by Contractor of notice to proceed for Base Bid Items.

Notice to proceed on work items added by exercise of the options will be given upon execution of consent of surety.

b. The parties hereto further agree that any option herein shall be considered to have been exercised at the time the Government deposits written notification to the Contractor in the mails.

c. The time allowed for completion of optional items 0003 through 0005 awarded under this contract will be the same as that for the base items, and will be measured from the date of receipt of the notice to proceed for the base items.

SC-1.2 Exception to Completion Period: In case the Contracting Officer determines that completion of seeding, sodding, and planting, and establishment of same is not feasible within the completion period(s) stated above, the Contractor shall accomplish such work in the first planting period following the contract completion period and shall complete such work as specified, unless other planting periods are directed or approved by the Contracting Officer.

SC-2. LIQUIDATED DAMAGES - CONSTRUCTION (APR 1984) (FAR 52.211-12)

(a) If the Contractor fails to complete the work within the time specified in the Special Clause SC-1 above, or any extension, the Contractor shall pay to the Government as liquidated damages, the sum shown on the schedule below for each day of delay.

(1) For work specified in SC-1.(a): $1,151.00

(2) For work specified in SC-1.(b): $1,151.00

(b) Liquidated damages under this contract shall in no event be cumulative and shall not exceed a total of $1,151.00 per day, even if the Contractor is delinquent in completing more than one of the items of work at any given time.

(c) If the Government terminates the Contractor's right to proceed, the resulting damage will consist of liquidated damages until such reasonable time as may be required for final completion of the work together with any increased costs occasioned the Government in completing the work.

(d) If the Government does not terminate the Contractor's right to proceed, the resulting damage will consist of liquidated damages until the work is completed or accepted.

(e) Exception to Liquidated Damage: In case the Contracting Officer determines that completion of work stated above in paragraph Exception to Completion Period(s) is not feasible during the completion period(s) stated in SC-1, such work will be exempted from liquidated damages.

SC-3 AND SC-4 DELETED.

SC-5. INSURANCE - WORK ON A GOVERNMENT INSTALLATION (SEP 1989) (FAR 52.228-5)

(a) The Contractor shall, at its own expense, provide and maintain during the entire performance period of this Contract at least the kinds and minimum amounts of insurance required in the Insurance Liability Schedule or elsewhere in the Contract.

(b) Before commencing work under this Contract, the Contractor shall certify to the Contracting Officer in writing that the required insurance has been obtained. The policies evidencing required insurance shall contain an endorsement to the effect that any cancellation or any material change adversely affecting the Government's interest shall not be effective:

(1) for such period as the laws of the State in which this Contract is to be performed prescribe; or

(2) until 30 days after the insurer or the Contractor gives written notice to the Contracting Officer, whichever period is longer.

(c) The Contractor shall insert the substance of this clause, including this paragraph (c), in subcontracts under this Contract that require work on a Government installation and shall require subcontractors to provide and maintain the insurance required in the Schedule or elsewhere in the Contract. The Contractor

shall maintain a copy of all subcontractors' proofs of required insurance, and shall make copies available to the Contracting Officer upon request.

(d) Insurance Liability Schedule (FAR 28.307-2)

(1) Workers' compensation and employer's liability. Contractors are required to comply with applicable Federal and State workers' compensation and occupational disease statutes. If occupational diseases are not compensable under those statutes, they shall be covered under the employer's liability section of the insurance policy, except when Contract operations are so commingled with a Contractor's commercial operation that it would not be practical to require this coverage. Employer's liability coverage of at least $100,000 shall be required, except in states with exclusive or monopolistic funds that do not permit workers' compensation to be written by private carriers.

(2) General Liability.

(a) The Contracting Officer shall require bodily injury liability insurance coverage written on the comprehensive form of policy of at least $500,000 per occurrence.

(b) Property damage liability insurance shall be required only in special circumstances as determined by the agency.

(3) Automobile liability. The Contracting Officer shall require automobile liability insurance written on the comprehensive form of policy. The policy shall provide for bodily injury and property damage liability covering the operation of all automobiles used in connection with performing the Contract. Policies covering automobiles operated in the United States shall provide coverage of at least $200,000 per person and $500,000 per occurrence for bodily injury and $20,000 per occurrence for property damage. The amount of liability coverage on other policies shall be commensurate with any legal requirements of the locality and sufficient to meet normal and customary claims.

(4) Aircraft public and passenger liability. When aircraft are used in connection with performing the Contract, the Contracting Officer shall require aircraft public and passenger liability insurance. Coverage shall be at least $200,000 per person and $500,000 per occurrence for bodily injury, other than passenger liability, and $200,000 per occurrence for property damage. Coverage for passenger liability bodily injury shall be at least $200,000 multiplied by the number of seats or passengers, whichever is greater.

(5) Environmental Liability If this contract includes the transport, treatment, storage, or disposal of hazardous material waste the following coverage is required.

The Contractor shall ensure the transporter and disposal facility have liability insurance if effect for claims arising out of the death or bodily injury and property damage from hazardous material/waste transport, treatment, storage and disposal, including vehicle liability and legal defense costs in the amount of $1,000,000.00 as evidenced by a certificate of insurance for General, Automobile, and Environmental Liability Coverage. Proof of this insurance shall be provided to the Contracting Officer.

SC-6. DELETED.

SC-7. PERFORMANCE OF WORK BY THE CONTRACTOR (APR 1984) (FAR 52.236-1): The Contractor shall perform on the site, and with its own organization, work equivalent to at least fifteen percent (15%) of the total amount of work to be performed under the Contract. The percentage may be reduced by a supplemental agreement to this Contract if, during performing the work, the Contractor requests a reduction and the Contracting Officer determines that the reduction would be to the advantage of the Government.

SC-8. PHYSICAL DATA (APR 1984) (FAR 52.236-4): Data and information furnished or referred to below is for the Contractor's information. The Government will not be responsible for any interpretation of or conclusion drawn from the data or information by the Contractor.

(a) Physical Conditions: The indications of physical conditions on the drawings and in the specifications are the result of site investigations by test holes shown on the drawings.

(b) Weather Conditions: Each bidder shall be satisfied before submitting his bid as to the hazards likely to arise from weather conditions. Complete weather records and reports may be obtained from any National Weather Service Office.

(c) Transportation Facilities: Each bidder, before submitting his bid, shall make an investigation of the conditions of existing public and private roads and of clearances, restrictions, bridge load limits, and other limitations affecting transportation and ingress and egress at the jobsite. The unavailability of transportation facilities or limitations thereon shall not become a basis for claims for damages or extension of time for completion of the work.

SC-9. DELETED

SC-10. LAYOUT OF WORK (APR 1984) (FAR 52.236-17): The Contractor shall lay out its work from Government-established base lines and bench marks indicated on the drawings, and shall be responsible for all measurements in connection with the layout. The Contractor shall furnish, at its own expense, all stakes, templates, platforms, equipment, tools, materials, and labor required to lay out any part of the work. The Contractor shall be responsible for executing the work to the lines and grades that may be established or indicated by the Contracting Officer. The Contractor shall also be responsible for maintaining and preserving all stakes and other marks established by the Contracting Officer until authorized to remove them. If such marks are destroyed by the Contractor or through its negligence before their removal is authorized, the Contracting Officer may replace them and deduct the expense of the replacement from any amounts due, or to become due, to the Contractor.

SC-11. DELETED.

SC-12. AIRFIELD SAFETY PRECAUTIONS (DEC 1991) (DOD FAR SUPP 252.236-7005)

(a) Definitions: As used in this clause --

(1) "Landing Areas" means:

(i) the primary surfaces which are comprised of the surface of the runways, the runway shoulders, and the lateral safety zones (the length of each primary surface is the same as the runway length;

the width of each primary surface is 2,000 feet (1,000 feet on each side of the runway centerline)*); (see footnote at end of clause)

(ii) the "clear zone" beyond the ends of each runway, i.e., the extension of the "primary surface" for a distance of 1,000 feet beyond each end of each runway;

(iii) all taxiways plus the lateral clearance zones along each side for the length of the taxiways (the outer edge of each lateral clearance zone is laterally 250 feet from the far or opposite edge of the taxiway, i.e., a 75-foot-wide taxiway would have a combined width of taxiway and lateral clearance zones of 425 feet); and

(iv) all aircraft parking aprons plus the area 125 feet in width extending beyond each edge all around the aprons.

(2) "Safety precaution areas" means those portions of approach-departure clearance zones and transitional zones where placement of objects incident to Contract performance might result in vertical projections at or above the approach-departure clearance surface or the transitional surface.

(i) The "approach-departure clearance surface" is an extension of the primary surface and the clear zone at each end of each runway, for a distance of 50,000 feet, first along an inclined (glide angle) and then along a horizontal plane, both flaring symmetrically about the runway centerline extended.

(a) The inclined plane (glide angle) begins in the clear zone 200 feet past the end of the runway (and primary surface) at the same elevation as the end of the runway, and continues upward at a slope of 50:1 (one foot vertically for each 50 feet horizontally) to an elevation of 500 feet above the established airfield elevation; at that point the plane becomes horizontal, continuing at that same uniform elevation to a point 50,000 feet longitudinally from the beginning of the inclined plane (glide angle) and ending there.

(b) The width of the surface at the beginning of the inclined plane (glide angle) is the same as the width of the clear zone; thence it flares uniformly, reaching the maximum width of 16,000 feet at the end.

(ii) The "approach-departure clearance zone" is the ground area under the approach-departure clearance surface.

(iii) The "transitional surface" is a sideways extension of all primary surfaces, clear zones, and approach-departure clearance surfaces along inclined planes.

(a) The inclined plane in each case begins at the edge of the surface.

(b) The slope of the inclined plane is 7:1 (one foot vertically for each 7 feet horizontally), and it continues to the point of intersection with

(1) Inner horizontal surface (which is the horizontal plane 150 feet above the established airfield elevation) or

(2) Outer horizontal surface (which is the horizontal plane 500 feet above the established airfield elevation), whichever is applicable.

(iv) The "transitional zone" is the ground area under the transitional surface. (It adjoins the primary surface, clear zone and approach-departure clearance zone.)

(b) General

(1) The Contractor shall comply with the requirements of this clause while

(i) Operating all ground equipment (mobile or station art);

(ii) Placing all materials; and

(iii) Performing all work, upon and around all airfields.

(a) The requirements of this clause are in addition to any other safety requirements of this contract.

(c) The Contractor shall--

(1) Report to the Contracting Officer before initiating any work;
(2) Notify the Contracting Officer of proposed changes to locations and operations;

(3) Not permit either its equipment or personnel to use any runway for purposes other than aircraft operation without permission of the Contracting Officer, unless the runway is--

(i) Closed by order of the Contracting Officer, and

(ii) Marked as provided in paragraph (d)(2) of this clause;

(4) Keep all paved surfaces such as runways, taxiways, and hardstands, clean at all times and, specifically, free from small stones which might damage aircraft propellers or jet aircraft;

(5) Operate mobile equipment according to the safety provisions of this clause, while actually performing work on the airfield. At all other times, the Contractor shall remove all mobile equipment to locations--

(i) Approved by the Contracting Officer,

(ii) At a distance of at least 750 feet from the runway centerline, plus any additional distance; and

(iii) Necessary to ensure compliance with the other provisions of this clause; and

(6) Not open a trench unless material is on hand and ready for placing in the trench. As soon as practicable after material has been placed and work approved, the Contractor shall backfill and compact trenches as required by the contract. Meanwhile, all hazardous conditions shall be marked and lighted in accordance with the other provisions of this clause.

(e) Landing Areas

The Contractor shall--

(1) Place nothing upon the landing areas without the authorization of the Contracting Officer.

(2) Outline those landing areas hazardous to aircraft, using (unless otherwise authorized by the Contracting Officer) red flags by day, and electric, battery-operated low-intensity red flasher lights by night;

(3) Obtain, at an airfield where flying is controlled, additional permission from the control tower operator every time before entering any landing area, unless the landing area is marked as hazardous in accordance with paragraph (d)(2) of this clause;

(4) Identify all vehicles it operates in landing areas by means of a flag on a staff attached to, and flying above, the vehicle. The flag shall be 3 feet square, and consist of a checkered pattern of international orange and white squares of 1 foot on each side (except that the flag may vary up to 10 percent from each of these dimensions);

(5) Mark all other equipment and materials in the landing areas, using the same marking devices as in paragraph (d)(2) of this clause; and

(6) Perform work so as to leave that portion of the landing area which is available to aircraft free from hazards, holes, piles of material, and projecting shoulders that might damage an airplane tire.

(e) Safety Precaution Areas

The Contractor shall--

(1) Place nothing upon the safety precaution areas without authorization of the Contracting Officer;

(2) Mark all equipment and materials in safety precaution areas, using (unless otherwise authorized by the Contracting Officer) red flags by day, and electric, battery-operated, low-intensity red flasher lights by night; and

(3) Provide all objects placed in safety precaution areas with a red light or red lantern at night, if the objects project above the approach-departure clearance surface or above the transitional surface.

SC-13. DELETED

SC-14. EQUIPMENT OWNERSHIP AND OPERATING EXPENSE SCHEDULE (MAR 1995)-(EFARS 52.231-5000)

(a) This clause does not apply to terminations. See 52.249-5000, Basis for Settlement of Proposals and FAR Part 49.

(b) Allowable cost for construction and marine plant and equipment in sound workable condition owned or controlled and furnished by a contractor or subcontractor at any tier shall be based on actual cost data for each piece of equipment or groups of similar serial and series for which the Government can determine

both ownership and operating costs from the contractor's accounting records. When both ownership and operating costs cannot be determined for any piece of equipment or groups of similar serial or series equipment from the contractor's accounting records, costs for that equipment shall be based upon the applicable provisions of EP 1110-1-8, Construction Equipment Ownership and Operating Expense Schedule, Region VIII. Working conditions shall be considered to be average for determining equipment rates using the schedule unless specified otherwise by the contracting officer. For equipment not included in the schedule, rates for comparable pieces of equipment may be used or a rate may be developed using the formula provided in the schedule. For forward pricing, the schedule in effect at the time of negotiations shall apply. For retroactive pricing, the schedule in effect at the time the work was performed shall apply.

(c) Equipment rental costs are allowable, subject to the provisions of FAR 31.105(d)(ii) and FAR 31.205-36. Rates for equipment rented from an organization under common control, lease-purchase arrangements, and sale-leaseback arrangements, will be determined using the schedule, except that actual rates will be used for equipment leased from an organization under common control that has an established practice of leasing the same or similar equipment to unaffiliated lessees.

(d) When actual equipment costs are proposed and the total amount of the pricing action exceeds the small purchase threshold, the contracting officer shall request the contractor to submit either certified cost or pricing data, or partial/limited data, as appropriate. The data shall be submitted on Standard Form 1411, Contract Pricing Proposal Cover Sheet.

(e) Copies of EP1110-1-8 “Construction Equipment Ownership and Operating Expense Schedule” Volume 4 (Montana) and Volume 8 (Washington, Oregon and Idaho) are available from the Superintendent of Documents, P.O. Box 371954, Pittsburg, PA 15250-7954, phone (202) 512-1800 and fax (202) 512-2250, OR from the Government Bookstore in the Jackson Federal Building, Seattle, WA, phone (206) 553-4279. The cost is $33.00 for each volume. Use the following stock numbers when ordering schedules:

S/N 008-022-00317-7	Volume 4
S/N 008-022-00321-5	Volume 8

SC-15. PAYMENT FOR MATERIALS DELIVERED OFF-SITE (MAR 1995)-(EFARS 52.232-5000)

(a) Pursuant to FAR clause 52.232-5, Payments Under Fixed Priced Construction Contracts, materials delivered to the contractor at locations other than the site of the work may be taken into consideration in making payments if included in payment estimates and if all the conditions of the General Provisions are fulfilled. Payment for items delivered to locations other than the work site will be limited to: (1) materials required by the technical provisions; or (3) materials that have been fabricated to the point where they are identifiable to an item of work required under this contract.

(b) Such payment will be made only after receipt of paid or receipted invoices or invoices with canceled check showing title to the items in the prime contractor and including the value of material and labor incorporated into the item. In addition to petroleum products, payment for materials delivered off-site is limited to the following items: Any other construction material stored offsite may be considered in determining the amount of a progress payment.

SC-16 AND SC-17. DELETED

SC-18. EBS CONTRACT DRAWINGS, MAPS, AND SPECIFICATIONS (OCT 1996)(52.0236 – 4001 EBS)

(a) The Government--

(1) Will provide the Contractor, without charge, one set of contract drawings and one set of specifications in electronic format on a compact disk. The Government will not give the Contractor any hard copy paper drawings or specifications for any contract resulting from this solicitation.

(b) The Contractor shall--

(1) check all drawings furnished immediately upon receipt;

(2) Compare all drawings and verify the figures before laying out the work;

(3) Promptly notify the Contracting Officer of any discrepancies;

and

(4) Be responsible for any errors which might have been avoided by complying with this paragraph (b).

(c) Large scale drawings shall, in general, govern small scale drawings. Figures marked on drawings shall, in general, be followed in preference to scale measurements.

(d) Omissions from the drawings or specifications or the misdescription of details of work which are manifestly necessary to carry out the intent of the drawings and specifications, or which are customarily performed, shall not relieve the Contractor from performing such omitted or misdescribed details of the work, but shall be performed as if fully and correctly set forth and described in the drawings and specifications.

(e) The work shall conform to the specifications and the contract drawings identified in the index of drawings attached at the end of this section.

SC-19 THROUGH SC-21. DELETED.

SC-22. EPA ENERGY STAR: The Government requires that certain equipment be Energy Star compliant. Initially, the sole Energy Star requirement shall be the self certification by the offeror that the specified equipment is Energy Star compliant. Within 3 months of the availability of an EPA sanctioned test for Energy Star compliance, the Contractor shall submit all equipment upgrades and additions for testing and provide proof of compliance to the Government upon completion of testing. Testing shall be at the Contractor's expense.

SC-23. YEAR 2000 COMPLIANCE

a. In accordance with FAR 39.106, the Contractor shall ensure that with respect to any design, construction, goods, or services under this contract as well as any subsequent task/delivery orders issued under this contract (if applicable), all information technology contained therein shall be Year 2000 compliant. Specifically,

b. The Contractor shall:

(1) Perform, maintain, and provide an inventory of all major components to include structures, equipment, items, parts, and furnishings under this contract and each task/delivery order which may be affected by the Year 2000 compliance requirement.

(2) Indicate whether each component is currently Year 2000 compliant or requires an upgrade for compliance prior to Government acceptance.

NOTE: The contract drawings were scanned from half-size prints, except Plates C1.3 and S2.1, which were scanned from full size.

INDEX OF DRAWINGS

DRAWING NUMBER	SHEET No.	PLATE No.	TITLE	REV. No.	DATE
			C-17 Squadron Operations/AMU Facility McChord AFB, WA PN: 97-3002		
226s/141-10-06	1	T0.1	Title Sheet		98SEP04
	2	C1.1	Existing Conditions/Borings		98SEP04
	3	C1.2	Existing Conditions/Borings		98SEP04
	4	C1.3	Demolition Plan		98SEP04
	5	C2.1	Site Plan		98SEP04
	6	C2.2	Site Pavement Striping Plan		98SEP04
	7	C3.1	Grading Plan		98SEP04
	8	C4.1	Utility Plan		98SEP04
	9	C6.1	Demolition Plan - Optional Items		98SEP04
	10	C7.1	Site Plan - Optional Item 0003		98SEP04
	11	C7.2	Site Plan - Optional Item 0004		98SEP04
	12	C8.1	Grading Plan - Optional Item 0003		98SEP04
	13	C8.2	Grading Plan - Optional Item 0004		98SEP04
	14	C9.1	Utility Plan - Optional Item 0003		98SEP04
	15	C9.2	Utility Plan - Optional Item 0004		98SEP04
	16	C10.1	Civil Details		98SEP04
	17	C10.2	Civil Details		98SEP04
	18	C10.3	Civil Details		98SEP04
	19	GT-1	Exploration Logs		98SEP04
	20	GT-2	Exploration Logs		98SEP04
	21	GT-3	Exploration Logs		98SEP04

DRAWING NUMBER	SHEET No.	PLATE No.	TITLE	REV. No.	DATE
226s/141-10-06	22	GT-4	Location of Explorations		98SEP04
	23	L1.1	Irrigation Plan - Base Bid		98SEP04
	24	L1.2	Planting Plan - Base Bid		98SEP04
	25	L1.3	Irrigation Plan - Option 0003		98SEP04
	26	L1.4	Planting Plan - Option 0003		98SEP04
	27	L1.5	Irrgation Plan - Option 0004		98SEP04
	28	L1.6	Planting Plan - Option 0004		98SEP04
	29	L1.7	Street Trees - Option 0005		98SEP04
	30	L2.1	Landscape Details		98SEP04
	31	A1.1	General Notes/ Abbreviations		98SEP04
	32	A2.1	First Floor Plan		98SEP04
	33	A2.2	Second Floor Plan		98SEP04
	34	A2.3	Roof Plan		98SEP04
	35	A2.4	Wall Type Schedule		98SEP04
	36	A2.5	Room Finish Schedule		98SEP04
	37	A2.6	Signage Schedule/Details		98SEP04
	38	A3.1	Elevations		98SEP04
	39	A3.2	Elevations		98SEP04
	40	A3.3	Building Section		98SEP04
	41	A3.4	Wall Sections		98SEP04
	42	A3.5	Wall Sections		98SEP04
	43	A4.1	Enlarged Plans		98SEP04
	44	A5.1	Interior Elevations		98SEP04
	45	A5.2	Interior Elevations		98SEP04
	46	A6.1	First Floor - Rfl. Clg. Plan		98SEP04
	47	A6.2	Second Floor Rfl. Clg. Plan		98SEP04
	48	A7.1	Stair Plans/Sections/ Details		98SEP04
	49	A8.1	Exterior Details		98SEP04
	50	A8.2	Exterior Details		98SEP04

DRAWING NUMBER	SHEET No.	PLATE No.	TITLE	REV. No.	DATE
226s/141-10-06	51	A8.3	Details		98SEP04
	52	A9.1	Interior Details		98SEP04
	53	A9.2	Interior Details		98SEP04
	54	A9.3	Interior Details		98SEP04
	55	F2.1	First Floor Plan-Furniture		98SEP04
	56	F2.2	Second Floor Plan-Furniture		98SEP04
	57	S0.1	General Notes & Abbreviations		98SEP04
	58	S2.1	Foundation Plan		98SEP04
	59	S2.2	2nd Floor Framing Plan		98SEP04
	60	S2.3	Roof Framing Plan		98SEP04
	61	S2.4	Braced Frame Elevations		98SEP04
	62	S2.5	Braced Frame Elevations		98SEP04
	63	S2.6	Braced Frame Elevations		98SEP04
	64	S3.1	Concrete Details		98SEP04
	65	S3.2	Concrete/Masonry Details		98SEP04
	66	S5.1	Steel Details		98SEP04
	67	S5.2	Steel Details		98SEP04
	68	S5.3	Steel Details		98SEP04
	69	S5.4	Steel Details		98SEP04
	70	S7.1	Stair Framing Plans & Details		98SEP04
	71	M0.1	Mechanical Legend		98SEP04
	72	M0.2	Mechanical Schedules		98SEP04
	73	M0.3	Mechanical Schedules		98SEP04
	74	M2.1	HVAC - First Floor		98SEP04
	75	M2.2	HVAC - Second Floor		98SEP04
	76	M2.3	Piping - First Floor		98SEP04
	77	M2.4	Piping - Second Floor		98SEP04
	78	M2.5	Enlarged Mechanical Room		98SEP04

DRAWING NUMBER	SHEET No.	PLATE No.	TITLE	REV. No.	DATE
226S/141-10-06	79	M3.1	Diagrams		98SEP04
	80	M3.2	Details		98SEP04
	81	M3.3	Sections and Diagrams		98SEP04
	82	M4.1	HVAC Controls Legend		98SEP04
	83	M4.2	AHU-1&2 Control System Diagram		98SEP04
	84	M4.3	Terminal Unit Controls		98SEP04
	85	M4.4	Heating Water System Diagram		98SEP04
	86	M4.5	Chilled Water System Diagram		98SEP04
	87	M6.1	Seismic Details		98SEP04
	88	M6.2	Seismic Details		98SEP04
	89	M6.3	Seismic Details		98SEP04
	90	P2.1	Plumbing - Foundation Plan		98SEP04
	91	P2.2	Plumbing - First Floor		98SEP04
	92	P2.3	Plumbing - Second Floor		98SEP04
	93	E0.1	Electrical Legend		98SEP04
	94	E1.1	Electrical Site Plan		98SEP04
	95	E1.2	Elec Site Plan – Opt. Item 0003		98SEP04
	96	E1.3	Elec Site Plan – Opt. Item 0004		98SEP04
	97	E2.1	Lighting - First Floor		98SEP04
	98	E2.2	Lighting - Second Floor		98SEP04
	99	E3.1	Power - First Floor		98SEP04
	100	E3.2	Power - Second Floor		98SEP04
	101	E3.3	Mechanical Power – First Floor		98SEP04
	102	E3.4	Mechanical Power – Second Floor		98SEP04
	103	E4.1	Communications - First Floor		98SEP04
	104	E4.2	Communications - Second Floor		98SEP04
	105	E5.1	Fire Alarm/Paging - First Floor		98SEP04
	106	E5.2	Fire Alarm/Paging - Second Floor		98SEP04

	107	E6.1	Audio/Visual Plan	98SEP04
226s/141-10-06	108	E7.1	Details	98SEP04
	109	E7.2	Details	98SEP04
	110	E7.3	Details	98SEP04
	111	E7.4	Light Fixture Details	98SEP04
	112	E7.5	Light Fixture Details	98SEP04
	113	E8.1	Power One-Line Diagram	98SEP04
	114	E8.2	System One-Line Diagrams	98SEP04
	115	E9.1	Panel Schedules	98SEP04
	116	E9.2	Panel Schedules	98SEP04
	117	E9.3	Communications Systems Schedules	98SEP04

REVISIONS TO DRAWINGS BY NOTATION.

Sheet 49 , Plate A8.1:

In Details 6 & 7, delete the callout “PRECAST CONC.” and replace with “BRICK”.

STANDARD DETAILS BOUND IN THE SPECIFICATIONS

SECTION 01501 - CONSTRUCTION FACILITIES AND TEMPORARY CONTROLS

1 & 2	U.S. Air Force Project Construction Sign	84 JUN 20
1	Hard Hat Sign	10 SEP 90

END OF SECTION

This page intentionally blank

General Decision Number WA980002

Superseded General Decision No. WA970002
State: Washington
Construction Type:
BUILDING
County(ies):

CHELAN	KITSAP	PIERCE
CLALLAM	KITTITAS	SNOHOMISH
GRAYS HARBOR	LEWIS	THURSTON
JEFFERSON	MASON	
KING	PACIFIC	

BUILDING CONSTRUCTION PROJECTS (does not include residential construction consisting of single family homes and apartments up to and including 4 stories)

Modification Number	Publication Date
0	02/13/1998
1	02/20/1998
2	03/06/1998
3	03/27/1998
4	04/10/1998
5	06/12/1998
6	06/19/1998
7	07/10/1998
8	07/24/1998
9	07/31/1998
10	08/28/1998
11	09/04/1998
12	09/11/1998
13	10/09/1998
14	10/16/1998
15	11/20/1998

COUNTY(ies):

CHELAN	KITSAP	PIERCE
CLALLAM	KITTITAS	SNOHOMISH
GRAYS HARBOR	LEWIS	THURSTON
JEFFERSON	MASON	
KING	PACIFIC	

ASBE0007A 06/01/1998

	Rates	Fringes
ASBESTOS WORKERS/INSULATORS: (Includes application of all insulating materials, protective coverings, coating and finishes to all types of mechanical systems)	23.41	8.85

BOIL0242B 10/01/1998

	Rates	Fringes
CHELAN AND KITTITAS COUNTIES		
BOILERMAKERS	24.07	9.81

BOIL0502B 10/01/1996

	Rates	Fringes
CLALLAM, GRAYS HARBOR, JEFFERSON, KING, KITSAP, LEWIS, MASON, PACIFIC, PIERCE, SNOHOMISH AND THURSTON COUNTIES		
BOILERMAKERS	24.32	9.01

BRWA0001A 05/01/1998

	Rates	Fringes
CLALLAM, GRAYS HARBOR, JEFFERSON, KING, KITSAP, LEWIS, MASON, PACIFIC (NORTHERN HALF), PIERCE, SNOHOMISH AND THURSTON COUNTIES		
BRICKLAYERS	25.50	6.17

BRWA0001F 06/01/1997

	Rates	Fringes
PACIFIC COUNTY (SOUTHERN PART)		
BRICKLAYERS	23.86	6.21
MARBLE MASONS	24.86	6.21

BRWA0001G 05/01/1997

	Rates	Fringes
PACIFIC (SOUTHERN PORTION) COUNTY		
TILE SETTER AND TERRAZZO WORKERS	22.18	5.82
TILE AND TERRAZZO FINISHERS	16.77	4.27

BRWA0001H 06/01/1998

	Rates	Fringes
CLALLAM, GRAYS HARBOR, JEFFERSON, KING, KITSAP,LEWIS, MASON, PACIFIC (NORTHERN HALF), PIERCE, THURSTON AND SNOHOMISH COUNTIES		
TILE AND TERRAZZO WORKERS	23.42	5.61
TILE AND TERRAZZO FINISHERS	18.91	5.46

BRWA0003A 06/01/1998

	Rates	Fringes
CHELAN AND KITTITAS COUNTIES		
BRICKLAYERS	21.79	6.83

BRWA0003E 04/01/1995

	Rates	Fringes
CLELAN AND KITTITAS		
TERRAZZO WORKERS	17.50	5.38
TILE LAYER	17.00	5.38
TILE AND TERRAZZO FINISHERS	13.70	5.38

CARP0770E 06/01/1998

	Rates	Fringes
WESTERN WASHINGTON: CLALLAM, GRAYS HARBOR, JEFFERSON, KING, KITSAP, LEWIS, MASON, PACIFIC (NORTH), PIERCE, SNOHOMISH AND THURSTON COUNTIES		
CARPENTERS AND DRYWALL APPLICATORS	24.50	6.27
CARPENTERS ON CREOSOTE MATERIAL	23.60	6.27
INSULATION APPLICATORS	21.40	6.27
SAWFILERS, STATIONARY POWER SAW		

OPERATORS, FLOOR FINISHER, FLOOR LAYER, SHINGLER, FLOOR SANDER OPERATORS OF OTHER STATIONARY WOOD WORKING TOOLS	24.63	6.27
MILLWRIGHT AND MACHINE ERECTORS	25.50	6.27
ACOUSTICAL WOKRERS	24.66	6.27
PILEDRIVER, DRIVING, PULLING, CUTTING, PLACING COLLARS, SETTING, WELDING OR CRESOTE TREATED MATERIAL, ALL PILING	24.70	6.27
PILDRIVER, BRIDGE DOCK & WHARF CARPENTERS	24.50	6.27
DIVERS	60.52	6.27
DIVERS TENDER	26.92	6.27

(HOURLY ZONE PAY APPLICABLE TO ALL CLASSIFICATIONS EXCEPT MILLWRIGHT AND PILEDRIVER)

Hourly Zone Pay shall be paid on jobs located outside of the free zone computed from the city center of the following listed cities:

Seattle	Olympia	Bellingham
Auburn	Bremerton	Anacortes
Renton	Shelton	Yakima
Aberdeen-Hoquiam	Tacoma	Wenatchee
Ellensburg	Everett	Port Angeles
Centralia	Mount Vernon	Sunnyside
Chelan	Pt. Townsend	

	Zone Pay
0 -25 radius miles	Free
25-35 radius miles	$1.00/hour
35-45 radius miles	$1.15/hour
45-55 radius miles	$1.35/hour
Over 55 radius miles	$1.55/hour

(HOURLY ZONE PAY - MILLWRIGHTS AND PILEDRIVERS ONLY)

Hour Zone Pay shall be computed from Seattle Union Hall, Tacoma City center, and Everett City center

	Zone Pay
0 -25 radius miles	Free
25-45 radius miles	$ .70/hour
Over 45 radius miles	$1.50/hour

Millwrights and Piledrivers who reside in Aberdeen, Bellingham, Port Angeles, Mount Vernon, Olympia, Wenatchee, or Yakima Local Union jurisdication areas, working on jobs in their respective area, shall have their Zone Pay measured from their respective city center

CENTRAL WASHINGTON: CHELAN AND KITTITAS COUNTIES

CARPENTERS AND DRYWALL APPLICATORS	19.77	6.27
CARPENTERS ON CREOSOTED MATERIALS	19.87	6.27
INSULATION APPLICATORS	19.77	6.27
SAWFILER, STATIONARY POWER SAW OPERATORS, FLOOR FINISHER, FLOOR LAYER, SHINGLERS, FLOOR		

SANDER OPERATOR AND OPERATORS OF OTHER STATIONARY WOOD WORKING TOOLS	19.90	6.27
MILLWRIGHTS AND MACHINE ERECTORS	25.50	6.27
ACCOUSTICAL WORKERS	20.03	6.27
PILDRIVER, DRIVING, PULLING, CUTTING, PLACING COLLARS, SETTING, WELDING, OR CREOSOTE TREATED MATERIAL, ALL PILING	24.70	6.27
PILEDRIVER, BRIDGE DOCK & WHARF CARPENTERS	24.50	6.27
DIVERS	58.07	6.27
DIVERS TENDER	25.83	6.27

CARP9003A 06/01/1998

	Rates	Fringes
PACIFIC COUNTY (South of a straight line made by extending the north boundary line of Wahkiakum County west to Willapa Bay to the Pacific Ocean, and thence north through the natural waterway to the Pacific Ocean (this will include the entire peninsula west of Willapa Bay)		
SEE ZONE DESCRIPTION FOR CITIES BASE POINTS		
ZONE 1:		
CARPENTERS	24.27	6.42
DRYWALL, ACOUSTICAL & LATHERS	20.48	6.27
FLOOR LAYERS & FLOOR FINISHERS (the laying of all hardwood floors nailed and mastic set, parquet and wood-type tiles, and block floors, the sanding and finishing of floors, the preparation of old and new floors when the materials mentioned above are to be installed; INSULATORS (fiberglass and similar irritating material)	24.42	6.42
MILLWRIGHTS	24.77	6.42
PILEDRIVERS	24.77	6.42
DIVERS	55.03	6.42
DIVERS TENDERS	25.59	6.42

Zone Differential (Add to Zone 1 rates):
Zone 2 - $0.85
Zone 3 - 1.25
Zone 4 - 1.70
Zone 5 - 2.00
Zone 6 - 3.00

BASEPOINTS: GOLDENDALE, LONGVIEW, AND VANCOUVER

ZONE 1: Projects located within 30 miles of the respective city hall of the above mentioned cities

ZONE 2: Projects located more than 30 miles and less than 40 miles of the respective city of the above mentioned cities

ZONE 3: Projects located more than 40 miles and less than 50 miles of the respective city of the above mentioned cities
ZONE 4: Projects located more than 50 miles and less than 60 miles of the respective city of the above mentioned cities.
ZONE 5: Projects located more than 60 miles and less than 70 miles of the respective city of the above mentioned cities
ZONE 6: Projects located more than 70 miles of the respected city of the above mentioned cities

---

ELEC0046B 06/01/1998

	Rates	Fringes
CALLAM, JEFFERSON, KING AND KITSAP COUNTIES		
ELECTRICIANS	27.50	7.50+3%
CABLE SPLICERS	30.25	7.50+3%

ELEC0046C 06/03/1996

	Rates	Fringes
CALLAM, JEFFERSON, KING, KITSAP COUNTIES		
SOUND AND COMMUNICATION TECHNICIAN	17.38	2.75+3%

SCOPE OF WORK

Includes the installation, testing, service and maintenance, of the following systems which utilize the trabsmission and/or transference of voice, sound vision and digital for commercial, education, security and entertainment purposes for the following: TV monitoring and surveillance, background-foreground music, intercom and telephone interconnect, inventory control systems, microwave transmission, multi-media, multiplex, nurse call system, radio page, school intercom and sound, burglar alarms, fire alarms and life safety systems (hang, terminate devices and panels and to conduct functional and systems tests), and low voltage master clock systems.

WORK EXCLUDED

Raceway systems are not covered (excluding Ladder-Rack for the purpose of the above listed systems). Chases and/or nipples (not to exceed 10 feet) may be installed on open wiring systems.
Energy management systems.
SCADA (Supervisory Control and Data Acquisition) when not intrinsic to the above listed systems (in the scope).

ELEC0076A 07/01/1998

	Rates	Fringes
GRAYS HARBOR, LEWIS, MASON, PACIFIC, PIERCE, THURSTON COUNTIES		
ELECTRICIANS	24.37	9.04+3%
CABLE SPLICERS	26.81	9.04+3%

ELEC0076D 06/01/1997

	Rates	Fringes
GRAYS HARBOR, LEWIS, MASON, PACIFIC, PIERCE AND THURSTON COUNTIES		

SOUND AND COMMUNICATIONS
TECHNICIAN 16.88 3.79

SCOPE OF WORK

Includes the installation, testing, service and maintenance, of the following systems which utilize the transmission and/or transference of voice, sound, vision and digital for commercial, education, security and entertainment purposes for the following: TV monitoring and surveillance, background-foreground music, intercom and telephone interconnect, inventory control systems, microwave transmission, multi-media, multiplex, nurse call system, radio page, school intercom and sound, burglar alarms and low voltage master clock systems.

WORK EXCLUDED

Raceway systems are not covered (excluding Ladder-Rack for the purpose of the above listed systems). Chases and/or nipples (not to exceed 10 feet) may be installed on open wiring systems.
Energy management systems.
SCADA (Supervisory Control and Data Acquistion) when not intrinsic to the above listed systems (in the scope).
Fire alarm systems when installed in raceways (including wire and cable pulling) shall be performed at the electrician wage rate, when either of the following two (2) conditions apply:

1. The project involves new or major remodel building trades construction.
2. The conductors for the fire alarm system are installed in conduit.

ELEC0112B 06/01/1998

	Rates	Fringes
KITTITAS COUNTY		
ELECTRICIANS	26.20	6.83+3%
CABLE SPLICERS	27.51	6.83+3%

ELEC0112G 03/16/1996

	Rates	Fringes
KITTTITAS COUNTY		
COMMUNICATION & SOUND		
TECHNICIANS	15.97	3.61

SCOPE OF WORK

Includes the installation, testing, service and maintenance, of the following systems which utilize the transmission and/or transference of voice, sound vision and digital for commercial, education, security and entertainment purposes for the following: TV monitoring and surveillance, background-foreground music, intercom and telephone interconnect, inventory control systems, microwave transmission, multi-media, multiplex, nurse call system, radio page, school intercom and sound, burglar alarms, and low voltage master clock systems.

WORK EXCLUDED

Raceways systems are not covered (excluding Ladder-Rack for the purpose fo the above listed systems). Chases and/or or nipples (not to exceed 10 feet) may be installed on open wiring systems.

Energy management systems.
SCADA (Supervisory Control and Data Acquisition) when not intrinsic to the above lsited systems (in the scope).
Fire alarm systems when installed in raceways (including wire and cable pulling) shall be performed at the electrician wage rate, when either of the following two (2) conditions apply:
1. The project involves new or major remodel building trades construction.
2. The conductors for the fire alarm system are installed in conduit.

ELEC0191A 06/01/1998

	Rates	Fringes
SNOHOMISH COUNTY		
ELECTRICIANS	25.34	6.63+3%
CABLE SPLICERS	27.87	6.63+3%
CHELAN COUNTY		
ELECTRICIANS	23.19	6.63+3%
CABLE SPLICERS	25.51	6.63+3%

ELEC0191E 05/31/1997

	Rates	Fringes
CHELAN AND SNOHOMISH COUNTIES		
SOUND AND COMMUNICATIONS		
TECHNICIANS	17.69	2.30+3%

SCOPE OF WORK

Includes the installation testing, service and maintenance, of the following systems which utiolize the transmission and/or transference of voice, sound vision and digital for commercial, education, security and entertainment purposes for the following: TV monitoring and surveillance, backround-foreground music, intercom and telephone interconnect, inventor control systems, microwave transmission, multi-media, multiplex, nurse call system, radio page, school intercom and sound, burglar alarms, and low voltage master clock systems.

WORK EXCLUDED

Raceway systems are not covered (excluding Ladder-Rack for the purpose of the above listed systems). Chases and/or nipples (not to exceed 10 feet) may be installed on open wiring systems.
Energy management systems.
SCADA (Supervisory Control and Data Acquisition) when not intrinsic to the above listed systems (in the scope).
Fire alarm systems when installed in raceways (including wire and cable pulling) shall be performed at the electrician wage rate, when either of the following two (2) conditions apply:
1. The project involves new or major remodel building trades construction.
2. The conductors for the fire alarm system are installed in conduit.

ELEV0019B 07/01/1998

	Rates	Fringes

CHELAN, CLALLAM, GRAYS HARBOR, JEFFERSON, KING, KITSAP, KITTITAS, LEWIS, MASON, PIERCE, SNOHOMISH AND THURSTON COUNTIES

ELEVATOR MECHANICS	29.105	6.405+a

FOOTNOTE a: Vacation Pay: 8% with 5 or more years of service, 6% for 6 months to 5 years service. Paid Holidays: New Years Day, Memorial Day, Independence Day, Labor Day, Thanksgiving Day and Friday after, and Christmas Day.

ELEV0023B 04/01/1998

	Rates	Fringes
PACIFIC COUNTY		
ELEVATOR MECHANIC	29.185	6.405+a

FOOTNOTE a: Vacation Pay: 8% with 5 or more years of service, 6% for 6 months to 5 years service. Paid Holidays: Memorial Day, Independence Day, Labor Day, Thanksgiving Day and Friday after, and Christmas Day, and New Years Day.

ENGI0302B 06/01/1998

	Rates	Fringes
CHELAN (WEST OF THE 120TH MERIDIAN), CLALLAM, GRAYS HARBOR, JEFFERSON, KING, KITSAP, KITTITAS, MASON AND SNOHOMISH COUNTIES		
ON PROJECTS DESCRIBED IN FOOTNOTE A BELOW, THE RATE FOR EACH GROUP SHALL BE 90% OF THE BASE RATE PLUS FULL FRINGE BENEFITS.		
ON ALL OTHER WORK, THE FOLLOWING RATES APPLY.		
POWER EQUIPMENT OPERATORS:		
Zone 1 (0-25 radius miles):		
GROUP 1 AAA	26.66	7.13
GROUP 1AA	26.16	7.13
GROUP 1A	25.66	7.13
GROUP 1	25.16	7.13
GROUP 2	24.72	7.13
GROUP 3	24.36	7.13
GROUP 4	22.26	7.13

Zone Differential (Add to Zone 1 rates):
Zone 2 (26-45 radius miles) - $ .70
Zone 3 (Over 45 radius miles) - $1.00

BASEPOINTS: Aberdeen, Bellingham, Bremerton, Everett, Kent, Mount Vernon, Port Angeles, Port Townsend, Seattle, Shelton, Wenatchee, Yakima

POWER EQUIPMENT OPERATORS CLASSIFICATIONS

GROUP 1AAA - Cranes-over 300 tons, or 300 ft of boom (including jib with attachments)

GROUP 1AA - Cranes 200 to 300 tons, or 250 ft of boom (including jib with attachments); Tower crane over 175 ft in height, base to boom

GROUP 1A - Cranes, 100 tons thru 199 tons, or 150 ft of boom (including jib with attachments); Crane-overhead, bridge type, 100 tons and over; Tower crane up to 175 ft in height base to boom; Loaders-overhead, 8 yards and over; Shovels, excavator, backhoes-6 yards and over with attachments

GROUP 1 - Cableway; Cranes 45 tons thru 99 tons, under 150 ft of

boom (including jib with attachments); Crane-overhead, bridge type, 45 tons thru 99 tons; Derricks on building work; Excavator, shovel, backhoes over 3 yards and under 6 yards; Hard tail end dump articulating off-road equipment 45 yards and over; Loader-overhead 6 yards to, but not including 8 yards; Mucking machine, mole, tunnel, drill and/or shield; Quad 9, HD 41, D-10; Remote control operator on rubber tired earth moving equipment; Rollagon; Scrapers-self propelled 45 yards and over; Slipform pavers; Transporters, all truck or track type

GROUP 2 - Barrier machine (zipper); Batch Plant Operaor-Concrete; Bump Cutter; Cranes, 20 tons thru 44 tons with attachments; Crane-overhead, bridge type-20 tons through 44 tons; Chipper; Concrete Pump-truck mount with boom attachment; Crusher; Deck Engineer/Deck Winches (power); Drilling machine; Excavator, shovel, backhoe-3yards and under; Finishing Machine, Bidwell, Gamaco and similar equipment; Guardrail punch; Horizontal/directional drill operator; Loaders-overhead under 6 yards; Loaders-plant feed; Locomotives-all; Mechanics-all; Mixers-asphalt plant; Motor patrol graders-finishing; Piledriver (other than crane mount); Roto-mill,roto-grinder; Screedman, spreader, topside operator-Blaw Knox, Cedar Rapids, Jaeger, Caterpillar, Barbar Green; Scraper-self propelled, hard tail end dump, articulating off-road equipment-under 45 yards; Subgrade trimmer; Tractors, backhoes-over 75 hp; Transfer material service machine-shuttle buggy, blaw knox-roadtec; Truck crane oiler/driver-100 tons and over; Truck Mount portable conveyor; Yo Yo Pay dozer

GROUP 3 - Conveyors; Cranes-thru 19 tons with attachments; A-frame crane over 10 tons; Drill oilers-auger type, truck or crane mount; Dozers-D-9 and under; Forklift-3000 lbs. and over with attachments; Horizontal/directional drill locator; Outside hoists-(elevators and manlifts), air tuggers, strato tower bucket elevators; Hydralifts/boom trucks over 10 tons; Loader-elevating type, belt; Motor patrol grader-nonfinishing; Plant oiler-asphalt, crusher; Pumps-concrete; Roller, plant mix or multi-lift materials; Saws-concrete; Scrpers-concrete and carry-all; Service engineer-equipment; Trenching machines; Truck Crane Oiler/Driver under 100 tons; Tractors, backhoe 75 hp and under

GROUP 4 - Assistant Engineer; Bobcat; Brooms; Compressor; Concrete finish mahine-laser screed; Cranes-A frame-10 tons and under; Elevator and Manlift-permanent or shaft type; Gradechecker, Stakehop; Forklifts under 3000 lbs. with attachments; Hydralifts/boom trucks, 10 tons and under; Oil distributors, blower distribution and mulch seeding operator; Pavement breaker; Posthole digger, mechanical; Power plant; Pumps, water; Rigger and Bellman; Roller-other than plant mix; Wheel Tractors, farmall type; Shotcrete/gunite equipment operator

FOOTNOTE A- Reduced rates may be paid on the following:

1. Projects involving work on structures such as buildings and bridges whose total value is less than $1.5 million excluding mechanical, electrical, and utility portions of the contract.
2. Projects of less than $1 million where no building is

involved. Surfacing and paving included, but utilities excluded.
3. Marine projects (docks, wharfs, etc.) less than $150,000.
HANDLING OF HAZARDOUS WASTE MATERIALS: Personnel in all craft classifications subject to working inside a federally designated hazardous perimeter shall be elgible for compensation in accordance with the following group schedule relative to the level of hazardous waste as outlined in the specific hazardous waste project site safety plan.
H-1 Base wage rate when on a hazardous waste site when not outfitted with protective clothing
H-2 Class "C" Suit - Base wage rate plus $ .25 per hour.
H-3 Class "B" Suit - Base wage rate plus $ .50 per hour.
H-4 Class "A" Suit - Base wage rate plus $ .75 per hour.

ENGI0370I 06/01/1998

	Rates	Fringes
CHELAN (EAST OF THE 120TH MERIDIAN) COUNTY		
ZONE 1:		
POWER EQUIPMENT OPERATORS:		
GROUP 1A	19.41	5.40
GROUP 1	19.95	5.40
GROUP 2	20.26	5.40
GROUP 3	20.85	5.40
GROUP 4	21.01	5.40
GROUP 5	21.16	5.40
GROUP 6	21.43	5.40
GROUP 7	21.70	5.40
GROUP 8	22.76	5.40

ZONE DIFFERENTIAL (Add to Zone 1 rate): Zone 2 - $2.00
Zone 1: Within 45 mile radius of Spokane, Moses Lake, Pasco, Washington; Lewiston, Idaho
Zone 2: Outside 45 mile radius of Spokane, Moses Lake, Pasco, Washington; Lewiston, Idaho
POWER EQUIPMENT OPERATORS CLASSIFICATIONS
GROUP 1A: Boat Operator; Crush Feeder; Oiler; Steam Cleaner
GROUP 1: Bit Grinders; Bolt Threading Machine; Compressors (under 2000 CFM, gas, diesel, or electric power); Deck Hand; Drillers Helper (assist driller in making drill rod connections, service drill engine and air compressor, repair drill rig and drill tools; drive drill support truck to and on the job site, remove drill cuttings from around bore hole and inspect drill rig while in operation); Fireman & Heat Tender; Grade Checker; Hydro-seeder, Mulcher, Nozzleman; Oiler Driver, & Cable Tender, Mucking Machine; Pumpman; Rollers, all types on subgrade, including seal and chip coatings (farm type, Case, John Deere & similar, or Compacting Vibrator), except when pulled by Dozer with operable blade; Welding Machine
GROUP 2: A-frame Truck (single drum); Assistant Refrigeration Plant (under 1000 ton); Assistant Plant Operator, Fireman or Pugmixer (asphalt); Bagley or Stationary Scraper; Belt Finishing Machine; Blower Operator (cement); Cement Hog; Compressor (2000

CFM or over, 2 or more, gas diesel or electric power); Concrete Saw (multiple cut); Distributor Leverman; Ditch Witch or similar; Elevator Hoisting Materials; Dope Pots (power agitated); Fork Lift or Lumber Stacker, hydra-lift & similar; Gin Trucks (pipeline); Hoist, single drum; Loaders (bucket elevators and conveyors); Longitudinal Float; Mixer (portable-concrete); Pavement Breaker, Hydra-Hammer & similar; Power Broom; Railroad Ballast Regulation Operator (self-propelled); Railroad Power Tamper Operator (self-propelled); Railroad Tamper Jack Operator (self-propelled; Spray Curing Machine (concrete); Spreader Box (self-propelled); Straddle Buggy (Ross & similar on construction job only); Tractor (Farm type R/T with attachment, except Backhoe); Tugger Operator

GROUP 3: A-frame Truck (2 or more drums); Assistant Refrigeration Plant & Chiller Operator (over 1000 ton); Backfillers (Cleveland & similar); Batch Plant & Wet Mix Operator, single unit (concrete); Belt-Crete Conveyors with power pack or similar; Belt Loader (Kocal or similar); Bending Machine; Bob Cat; Boring Machine (earth); Boring Machine (rock under 8" bit) (Quarry Master, Joy or similar); Bump Cutter (Wayne, Saginau or similar); Canal Lining Machine (concrete); Chipper (without crane); Cleaning & Doping Machine (pipeline); Deck Engineer; Elevating Belt-type Loader (Euclid, Barber Green & similar); Elevating Grader-type Loader (Dumor, Adams or similar); Generator Plant Engineers (diesel or electric); Gunnite Combination Mixer & Compressor; Locomotive Engineer; Mixermobile; Mucking Machine; Posthole Auger or Punch; Pump (grout or jet); Soil Stabilizer (P & H or similar); Spreader Machine; Tractor (to D-6 or equivalent) and Traxcavator; Traverse Finish Machine; Turnhead Operator

GROUP 4: Concrete Pumps (squeeze-crete, flow-crete, pump-crete, Whitman & similar); Curb Extruder (asphalt or concrete); Drills (churn, core, calyx or diamond)(Operate drilling machine, drive or transport drill rig to and on job site and weld well casing); Equipment Serviceman, Greaser & Oiler; Hoist (2 or more drums or Tower Hoist); Loaders (overhead & front-end, under 4 yds. R/T); Refrigeration Plant Engineer (under 1000 ton); Rubber-tired Skidders (R/T with or without attachments); Surface Heater & Planer Machine; Trenching Machines (under 7 ft. depth capacity); Turnhead (with re-screening); Vacuum Drill (reverse circulation drill under 8" bit)

GROUP 5: Backhoe (under 45,000 gw); Backhoe and Hoe Ram (under 3/4 yd.); Carrydeck & boom truck (under 25 tons); Cranes (25 tons & under),all attachments including clamshell, dragline); Derricks & Stifflegs (under 65 tons); Drilling Equipment (8" bit & over) (Robbins, reverse circulation & similar)(operates drill machine, drive or transport drill rig to and on job site and weld well casing); Hoe Ram; Piledriving Engineers; Paving (dual drum); Railroad Track Liner Operator(self-propelled); Refrigeration Plant Engineer (1000 tons & over); Signalman (Whirleys, Highline Hammerheads or similar)

GROUP 6: Asphalt Plant Operator; Automatic Subgrader (Ditches & Trimmers) (Autograde, ABC, R.A. Hansen & similar on grade wire);

Backhoe (45,000 gw and over to 110,000 gw); Backhoes & Hoe Ram (3/4 yd. to 3 yd.); Batch Plant (over 4 units); Batch & Wet Mix Operator (multiple units, 2 & incl. 4); Blade Operator (Motor Patrol & Attachments, Athey & Huber); Boom Cats (side); Cableway Controller (dispatcher); Clamshell Operator (under 3 yds.); Compactor (self-propelled with blade); Concrete Pump Boom Truck; Concrete Slip Form Paver; Cranes (over 25 tons including 45 tons), all attachments including clamshell, dragline; Crusher, Grizzle & Screening Plant Operator; Dozer, 834 R/T & similar; Draglines (under 3 yds.); Drill Doctor; H.D.Mechanic; H.D. Welder; Loader Operator (front-end & overhead, 4 yds. incl. 8 yds.), Multiple Dozer Units with single blade; Paving Machine (asphalt and concrete); Quad-Track or similar equipment; Rollerman (finishing asphalt pavement); Roto Mill (pavement grinder); Scrapers, all rubber-tired; Screed Operator; Shovel (under 3 yds.); Tractors (D-6 & equilvalent & over); Trenching Machines (7 ft. depth & over); Tug Boat Operator; Vactor Guzzler, super sucker

GROUP 7: Backhoe (over 110,000 gw); Backhoes & Hoe Ram (3 yds. & over); Blade (finish & bluetop), Automatic, CMI, ABC, Finish Athey & Huber & similar when used as automatic; Cableway Operators; Clamshell Operator (3 yds. & over); Cranes (over 45 tons to but not including 85 tons), all attachments including clamshell and dragline; Derricks & Stifflegs (65 tons & over); Draglines (3 yds. & over); Elevating Belt (Holland type); Heavy Equipment Robotics Operator; Loader (360 degrees revolving Koehring Scooper or similar); Loaders (overhead & front-end, over 8 yds. to 10 yds.); Rubber-tired Scrapers (multiple engine with three or more scrapers); Shovels (3 yds. & over); Ultra High Pressure Wateriet Cutting Tool System Operator (30,000 psi); Vacuum Blasting Machine Operator; Whirleys & Hammerheads, ALL

GROUP 8: Cranes (85 tons and over, and all climbing, overhead, rail and tower); Loaders (overhead and front-end, 10 yards and over); Helicopter Pilot

BOOM PAY: (All Cranes, Including Tower)

180' to 250'	$.30 over scale
Over 250'	$.60 over scale

NOTE: In computing the length of the boom on Tower Cranes, they shall be measured from the base of the tower to the point of the boom.

HAZMAT: Anyone working on HAZMAT jobs, working with supplied air shall receive $1.00 an hour above classification.

ENGI0612B 06/01/1998

	Rates	Fringes

LEWIS, PIERCE, PACIFIC (portion lying north of a parallel line extending west from the northern boundary of Wahkaikum County to the sea) AND THURSTON COUNTIES

ON PROJECTS DESCRIBED IN FOOTNOTE A BELOW, THE RATE FOR EACH GROUP SHALL BE 90% OF THE BASE RATE PLUS FULL FRINGE BENEFITS.
ON ALL OTHER WORK, THE FOLLOWING RATES APPLY.

POWER EQUIPMENT OPERATORS:
Zone 1 (0-25 radius miles):

GROUP 1AAA	26.66	7.13
GROUP 1AA	26.16	7.13
GROUP 1A	25.66	7.13
GROUP 1	25.16	7.13
GROUP 2	24.72	7.13
GROUP 3	24.36	7.13
GROUP 4	22.26	7.13

Zone Differential (Add to Zone 1 rates):
Zone 2 (26-45 radius miles) = $ .70
Zone 3 (Over 45 radius miles) - $1.00
BASEPOINTS: CENTRALIA, OLYMPIA, TACOMA
POWER EQUIPMENT OPERATORS CLASSIFICATIONS
GROUP 1 AAA - Cranes-over 300 tons or 300 ft of boom (including jib with attachments)
GROUP 1AA - Cranes- 200 tonsto 300 tons, or 250 ft of boom (including jib with attachments; Tower crane over 175 ft in height, bas to boom
GROUP 1A - Cranes, 100 tons thru 199 tons, or 150 ft of boom (including jib with attachments); Crane-overhead, bridge type, 100 tons and over; Tower crane up to 175 ft in height base to boom; Loaders-overhead, 8 yards and over; Shovels, excavator, backhoes-6 yards and over with attachments
GROUP 1 - Cableway; Cranes 45 tons thru 99 tons under 150 ft of boom (including jib with attachments); Crane-overhead, bridge type, 45 tons thru 99 tons; Derricks on building work; Excavator, shovel, backhoes over 3 yards and under 6 yards; Hard tail end dump articulating off-road equipment 45 yards and over; Loader-overhead, 6 yards to, but not including, 8 yards; Mucking machine, mole, tunnel, drill and/or shield; Quad 9 HD 41, D-10; Remote control operator on rubber tired earth moving equipment; Rollagon; Scrapers-self-propelled 45 yards and over; Slipform pavers; Transporters, all track or truck type
GROUP 2 - Barrier machine (zipper); Batch Plant Operator-concrete; Bump Cutter; Cranes, 20 tons thru 44 tons with attachments; Crane-Overhead, bridge type, 20 tons through 44 tons; Chipper; Concrete pump-truck mount with boom attachment; Crusher; Deck engineer/deck winches (power); Drilling machine; Excavator, shovel, backhoe-3 yards and under; Finishing machine, Bidwell, Gamaco and similar equipment; Guardrail punch; Loaders, overhead under 6 yards; Loaders-plant feed; Locomotives-all; Mechanics- all; Mixers, asphalt plant; Motor patrol graders, finishing; Piledriver (other than crane mount); Roto-mill, roto-grinder; Screedman, spreader, topside operator-Blaw Knox, Cedar Rapids, Jaeger, Caterpillar, Barbar Green; Scraper-self-propelled, hard tail end dump, articulating off-road equipment-under 45 yards; Subgrader trimmer; Tractors, backhoe over 75 hp; Transfer material service machine-shuttle buggy, Blaw Knox-Roadtec; Truck Crane oiler/driver-100 tons and over; Truck Mount Portable Conveyor; Yo Yo pay
GROUP 3 - Conveyors; Cranes through 19 tons with attachments;

Crane-A-frame over 10 tons; Drill oilers-auger type, truck or crane mount; Dozer-D-9 and under; Forklift-3000 lbs. and over with attachments; Horizontal/directional drill locator; Outside Hoists-(elevators and manlifts), air tuggers, strato tower bucket elevators; Hydralifts/boom trucks over 10 tons; Loaders-elevating type, belt; Motor patrol grader-nonfinishing; Plant oiler-asphalt, crusher; Pump-Concrete; Roller, plant mix or multi-lfit materials; Saws-concrete; Scrapers, concrete and carry all; Service engineers-equipment; Trenching machines; Truck crane oiler/driver under 100 tons; Tractors, backhoe under 75 hp

GROUP 4 - Assistant Engineer; Bobcat; Brooms; Compressor; Concrete Finish Machine-laser screed; Cranes A-frame 10 tons and under; Elevator and manlift (permanent and shaft type); Forklifts-under 3000 lbs. with attachments; Gradechecker, stakehop; Hydralifts/boom trucks, 10 tons and under; Oil distributors, blower distribution and mulch seeding operator; Pavement breaker; Posthole digger-mechanical; Power plant; Pumps-water; Rigger and Bellman; Roller-other than plant mix; Wheel Tractors, farmall type; Shotcrete/gunite equipment operator

FOOTNOTE A- Reduced rates may be paid on the following:

1. Projects involving work on structures such as buildings and bridges whose total value is less than $1.5 million excluding mechanical, electrical, and utility portions of the contract.
2. Projects of less than $1 million where no building is involved. Surfacing and paving included, but utilities excluded.
3. Marine projects (docks, wharfs, etc.) less than $150,000.

HANDLING OF HAZARDOUS WASTE MATERIALS: Personnel in all craft classifications subject to working inside a federally designated hazardous perimeter shall be elgible for compensation in accordance with the following group schedule relative to the level of hazardous waste as outlined in the specific hazardous waste project site safety plan.

H-1 Base wage rate when on a hazardous waste site when not outfitted with protective clothing
H-2 Class "C" Suit - Base wage rate plus $ .25 per hour.
H-3 Class "B" Suit - Base wage rate plus $ .50 per hour.
H-4 Class "A" Suit - Base wage rate plus $ .75 per hour.

---

* IRON0086A 07/01/1998

	Rates	Fringes
IRONWORKERS	22.90	10.17

LABO0001I 06/01/1998

	Rates	Fringes
CHELAN AND KITTITAS COUNTIES		
LABORERS:		
ZONE 1:		
GROUP 1	13.44	5.19
GROUP 2	15.76	5.19
GROUP 3	17.48	5.19
GROUP 4	17.96	5.19
GROUP 5	18.32	5.19

ZONE DIFFERENTIAL (ADD TO ZONE 1 RATES):
ZONE 2 - $ .70
ZONE 3 - $1.00
BASE POINTS: CHELAN, SUNNYSIDE, WENATCHEE, AND YAKIMA
ZONE 1 - Projects within 25 radius miles of the respective city hall
ZONE 2 - More than 25 but less than 45 radius miles from the respective city hall
ZONE 3 - More than 45 radius miles from the respective city hall
CALLAM, GRAYS HARBOR, JEFFERSON, KING, KITSAP, LEWIS, MASON, PACIFIC (North of a straight line made by extending the north boundary of Wahkiakum County west to the Pacific Ocean), PIERCE, SNOHOMISH AND THURSTON COUNTIES
LABORERS:
ZONE 1:

GROUP 1	14.36	5.19
GROUP 2	16.68	5.19
GROUP 3	21.36	5.19
GROUP 4	21.84	5.19
GROUP 5	22.20	5.19

ZONE DIFFERENTIAL (ADD TO ZONE 1 RATES):
ZONE 2 - $ .70
ZONE 3 - $1.00
BASE POINTS: BELLINGHAM, MT. VERNON, EVERETT, SEATTLE, KENT, TACOMA, OLYMPIA, CENTRALIA, ABERDEEN, SHELTON, PT. TOWNSEND, PT. ANGELES, AND BREMERTON
ZONE 1 - Projects within 25 radius miles of the respective city hall
ZONE 2 - More than 25 but less than 45 radius miles from the respective city hall
ZONE 3 - More than 45 radius miles from the respective city hall
LABORERS CLASSIFICATIONS
GROUP 1: Landscaping and Planting; Watchman; Window Washer/Cleaner (detail clean-up, such as but not limited to cleaning floors, ceilings, walls, windows, etc., prior to final acceptance by the owner)
GROUP 2: Batch Weighman; Crusher Feeder; Fence Laborer; Flagman; Pilot Car
GROUP 3: General Laborer; Air, Gas, or Electric Vibrating Screed; Asbestos Abatement Laborer; Ballast Regulator Machine; Brush Cutter; Brush Hog Feeder; Burner; Carpenter Tender; Cement Finisher Tender; Change House or Dry Shack; Chipping Gun (under 30 lbs.); Choker Setter; Chuck Tender; Clean-up Laborer; Concrete Form Stripper; Curing Laborer; Demolition (wrecking and moving including charred material); Ditch Digger; Dump Person; Fine Graders; Firewatch; Form Setter; Gabian Basket Builders; Grout Machine Tender; Grinders; Guardrail Erector; Hazardous Waste Worker (Level C); Maintenance Person; Material Yard Person; Pot Tender; Rip Rap Person; Riggers; Scale Person; Sloper Sprayer; Signal Person; Stock Piler; Stake Hopper; Toolroom Man (at job

site); Topper-Tailer; Track Laborer; Truck Spotter; Vinyl Seamer
GROUP 4: Cement Dumper-Paving; Chipping Gun (over 30 lbs.); Clary Power Spreader; Concrete Dumper/Chute Operator; Concrete Saw Operator; Drill Operator (hydraulic, diamond, aiartrac); Faller and Bucker Chain Saw; Grade Checker and Transit Person; Groutmen (pressure) including post tension beams; Hazardous Waste Worker (Level B); High Scaler; Jackhammer; Laserbeam Operator; Manhole Builder-Mudman; Mortarman and Hodcarrier; Nozzleman (concrete pump, green cutter when using combination of high pressure air and water on concrete and rock, sandblast, gunite, shotcrete, water blaster, vacuum blaster); Pavement Breaker; Pipe Layer and Caulker; Pipe Pot Tender; Pipe Reliner (not insert type); Pipe Wrapper; Power Jacks; Railroad Spike Puller-Power; Raker-Asphalt; Rivet Buster; Rodder; Sloper (over 20'); Spreader (concrete); Tamper and Similar electric, air and glas operated tool; Timber Person-sewer (lagger shorer and cribber); Track Liner Power; Tugger Operator; Vibrator; Well Point Laborer
GROUP 5: Caisson Worker; Miner; Powderman; Re-Timberman; Hazardous Waste Worker (Level A).

LABO0238I 06/01/1998

	Rates	Fringes
CHELAN COUNTY		
HOD CARRIERS	19.71	4.39

LABO0335C 06/01/1998

	Rates	Fringes
PACIFIC (South of a straight line made by extending the north boundary line of Wahkiakum County west to the Pacific Ocean)		
COUNTY		
ZONE 1:		
LABORERS:		
GROUP 1	20.47	6.14
GROUP 2	20.87	6.14
GROUP 3	21.21	6.14
GROUP 4	21.49	6.14
GROUP 5	18.73	6.14
GROUP 6	16.63	6.14
GROUP 7	14.18	6.14

LABORERS CLASSIFICATIONS
GROUP 1: Asphalt Plant Laborers; Asphalt Spreaders; Batch Weighman; Broomers; Brush Burners and Cutters; Car and Truck Loaders; Carpenter Tender; Change-House Man or Dry Shack Man; Choker Setter; Clean-up Laborers; Curing-concrete; Demolition, Wrecking, and Moving Laborers; Dumpers, road oiling crew; Dumpmen (for grading crew); Elevator Feeders; Guard Rail, Median Rail, Reference Post, Guide Post, Right-of-way Marker; Fine Graders; Fire Watch; Form Strippers (not swinging stages); General Laborers; Hazardous Waste Worker; Leverman or Aggregate Spreader (Flaherty and similar types); Loading Spotters; Material Yard Man (including electrical); Pittsburgh Chipper Operator or similar types; Railroad Track Laborers;

Ribbon Setters (including steel forms); Rip Rap Man (hand placed); Road Pump Tender; Sewer Laborer; Signalman; Skipman; Slopers; Spraymen; Stake Chaser; Stockpiler; Tie Back Shoring; Timber Faller and Bucker (hand labor); Toolroom Man (at job site); Tunnel Bullgang (above ground); Weight-Man-Crusher (aggregate when used)

GROUP 2: Applicator (including pot power tender for same), applying protective material by hand or nozzle on utility lines or storage tanks on project; Brush (power saw); Burners; Choker Splicer; Clary Power Spreader and similar types; Clean up-nozzleman-Green cutter (concrete, rock, etc.); Concrete Laborer; Concrete Power Buggyman; Crusher Feeder; Demolition and Wrecking Charred Materials; Gunite Nozzleman Tender; Gunite or Sand Blasting Pot Tender; Handlers or Mixers of all Materials of an irritating nature (including cement and lime); Pipe Doping & Wrapping; Tool Operators (includes but not limited to: Dry pack machine, Jackhammer, Chipping guns, Paving breakers); Post Hole Digger, air, gas or electric; Vibrating Screed; Tampers; Sand Blasting (wet); Stake-Setter; Tunnel-Muckers, Brakemen, Concrete Crew, Bull gang (Underground)

GROUP 3: Asbestos Removal (structural removal only); Bit Grinder; Drill Doctor; Drill Operators, air tracks cat drills, wagon drills, rubber-mounted drills, and other similar types; Concrete Saw Operator; Gunite Nozzleman; High scalers, strippers and drillers (covers work in swinging stages, chairs or belts, under extreme conditions unusual to normal drilling, blasting, barring-down, or sloping and stripping); Manhole Builder; Powdermen; Power Saw Operators (Bucking and Falling); Pumpcrete Nozzlemen; Sand Blasting (dry); Sewer Timberman; Track Liners; Anchor Machines; Ballast Regulators; Multiple Tampers; Power Jacks; Tugger Operator; Tunnel-Chuck Tenders, Nippers and Timbermen; Vibrator; Water Blaster

GROUP 4: Asphalt Raker; Concrete Saw Operator (walls); Concrete Nozzelman; Grade Checker; Pipelayer; Laser Beam (Tunnel) applicable when assigned to move, set up, align laser beam; Miner-Tunnel; Motorman-dinky Locomotive-Tunnel; Powderman-Tunnel; Shield Operator-Tunnel

GROUP 5: Traffic Flaggers

GROUP 6: Fence Builders

GROUP 7: Landscaping and Planting Laborers

ZONE DIFFERENTIAL (ADD TO ZONE 1 RATES):

ZONE 2 - $0.65
ZONE 3 - 1.15
ZONE 4 - 1.70
ZONE 5 - 2.75

ZONE DEFINITIONS

BASE POINTS: GOLDENDALE, LONGVIEW, AND VANCOUVER

ZONE 1: Projects within 30 miles of the respective city halL

ZONE 2: More than 30 miles but less than 40 miles from the respective city hall.

ZONE 3: More than 40 miles but less than 50 miles from the respective city hall.

ZONE 4: More than 50 miles but less than 80 miles from the respective city hall.
ZONE 5: More than 80 miles from the respective city hall.

PAIN0005A 03/01/1998

	Rates	Fringes
CLALLAM, GRAYS HARBOR, JEFFERSON, KING, KITSAP, LEWIS, MASON, PACIFIC, PIERCE, SNOHOMISH AND THURSTON COUNTIES		
PAINTERS	21.11	3.52

PAIN0005C 06/10/1996

	Rates	Fringes
CLALLAM, GRAYS HARBOR, JEFFERSON, KING, KITSAP, LEWIS, MASON, PIERCE, SNOHOMISH AND THURSTON COUNTIES		
DRYWALL FINSIHERS	23.00	5.71

PAIN0054A 07/01/1998

	Rates	Fringes
CHELAN AND KITTITAS COUNTIES		
PAINTERS:		
BRUSH, PAPERHANGER, STEAM-CLEANING, STRIPING and SPRAY	18.80	3.67
TV, RADIO, ELECTRICAL TRANSMISSION TOWERS	20.39	3.67

PAIN0054G 09/01/1998

	Rates	Fringes
CHELAN AND KITTITAS COUNTIES		
GLAZIERS	15.87	3.17

PAIN0054I 06/01/1998

	Rates	Fringes
CHELAN AND KITTITAS COUNTIES		
DRYWALL FINISHER (TAPER)	19.37	4.24

PAIN0055M 02/01/1996

	Rates	Fringes
PACIFIC COUNTY		
DRYWALL FINSIHERS	22.15	5.63

PAIN0188A 07/01/1998

	Rates	Fringes
CLALLAM, JEFFERSON, KING, KITSAP, LEWIS, MASON, PIERCE, SNOHOMISH AND THURSTON COUNTIES		
GLAZIERS	23.85	5.16

PAIN0188B 07/01/1998

	Rates	Fringes
GRAYS HARBOR AND PACIFIC COUNTIES		
GLAZIERS	13.35	4.02

PAIN1238A 06/01/1998

	Rates	Fringes
CALLAM, GRAYS HARBOR, JEFFERSON, LEWIS, MASON, PACIFIC (NORTHERN PORTION), PIERCE AND THURSTON COUNTIES		
SOFT FLOOR LAYERS	19.86	5.61

PAIN1238D 06/01/1998

	Rates	Fringes
KING, KITSAP AND SNOHOMISH COUNTIES		
SOFT FLOOR LAYERS	21.38	5.63

PLAS0072C 06/01/1998

	Rates	Fringes
CHELAN AND KITTITAS COUNTIES		
Zone 1:		
CEMENT MASONS	20.24	5.15

Zone Differential (Add to Zone 1 rates): Zone 2 - $2.00

BASE POINTS: Spokane, Pasco, Moses Lake, and Lewiston
Zone 1: 0 - 45 radius miles from the main post office
Zone 2: 45 radius miles from the main post office

PLAS0082D 06/01/1998

	Rates	Fringes
PACIFIC (South of a straight line made by extending the north boundary line of Wahkiakum County west to the Pacific Ocean) COUNTY		
PLASTERERS	23.16	5.86

PLAS0528B 06/01/1998

	Rates	Fringes
CLALLAM, GRAYS HARBOR, JEFFERSON, KING, KITSAP, LEWIS, MASON, PACIFIC (North of a straight line made by extending the north boundary line of Wahkiakum Count, west to the Pacific Ocean), PIERCE, SNOHOMISH AND THURSTON COUNTIES		
CEMENT MASONS	23.80	7.89

PLUM0032A 06/01/1998

	Rates	Fringes
CHELAN AND KITTITAS (NORTHERN TIP) COUNTIES		
PLUMBERS AND PIPEFITTERS	23.47	8.67

PLUM0032B 06/01/1998

	Rates	Fringes
CLALLAM, KING AND JEFFERSON COUNTIES		
PLUMBERS AND PIPEFITTERS	29.48	10.08

PLUM0082D 06/01/1997

	Rates	Fringes
GRAYS HARBOR, LEWIS, MASON (EXCLUDING NE SECTION), PACIFIC, PIERCE AND THURSTON COUNTIES		
PLUMBERS AND PIPEFITTERS		

Total plumbing and piping cost under $250,000	16.35	7.42
Total plumbing and piping cost $250,000 and over and under $500,000	22.05	7.90
Total plumbing and piping cost $500,000 and over	25.72	9.00

PLUM0265A 06/01/1997

	Rates	Fringes
SNOHOMISH COUNTY		
PLUMBERS AND PIPEFITTERS:	28.14	9.39

PLUM0598B 06/01/1998

	Rates	Fringes
KITTITAS (ALL BUT NORTHERN TIP)		
PLUMBERS AND PIPEFITTERS	27.80	9.60

PLUM0631A 06/01/1997

	Rates	Fringes
MASON (NE SECTION), AND KITSAP COUNTIES		
PLUMBERS/PIPEFITTERS:		
All new construction, additions, and remodeling of commercial building projects such as: cocktail lounges and taverns, professional buildings, medical clinics, retail stores, hotels and motels, restaurants and fast food types, gasoline service stations, and car washes where the plumbing and mechanical cost of the project is less than $100,000	14.55	7.98
All other work where the plumbing and mechanical cost of the project is $100,000 and over	20.78	12.28

ROOF0054A 06/20/1998

	Rates	Fringes
CLALLAM, JEFFERSON, KING, KITSAP, MASON AND SNOHOMISH COUNTIES		
ROOFERS	23.30	5.73

ROOF0153A 06/01/1998

	Rates	Fringes
GRAYS HARBOR, LEWIS, PACIFIC, PIERCE AND THURSTON COUNTIES		
ROOFERS	20.60	5.84

ROOF0189A 07/01/1997

	Rates	Fringes
CHELAN COUNTY		

ROOFERS	17.00	6.05

ROOF0189E 07/01/1997

	Rates	Fringes
KITTITAS COUNTY		
ROOFERS	17.60	5.60

SFWA0699B 07/01/1998

	Rates	Fringes
KING, KITSAP, PIERCE, SNOHOMISH AND THURSTON COUNTIES		
SPRINKLER FITTERS	27.00	10.05

SHEE0066D 06/01/1998

	Rates	Fringes
CHELAN COUNTY		
SHEET METAL WORKERS	22.55	6.75

SHEE0066F 06/01/1998

	Rates	Fringes
CLALLAM, JEFFERSON, KING, KITSAP, MASON (NORTHERN PORTION) AND SNOHOMISH COUNTIES		
SHEET METAL WORKERS	27.01	8.32

SHEE0066G 06/01/1998

	Rates	Fringes
GRAYS HARBOR, LEWIS, MASON (SOUTHERN PORTION), PACIFIC, PIERCE AND THURSTON COUNTIES		
SHEET METAL WORKERS	26.77	7.91

SHEE0066M 06/01/1998

	Rates	Fringes
KITTITAS COUNTY		
SHEET METAL WORKERS	23.93	6.87

TEAM0174B 06/01/1998

	Rates	Fringes
CLALLAM, GRAYS HARBOR, JEFFERSON, KING, KITSAP, LEWIS, MASON, PACIFIC (North of a straight line made by extending the north boundary line of Wahkiakum County west to the Pacific Ocean), PIERCE, SNOHOMISH AND THURSTON COUNTIES		
TRUCK DRIVERS:		
GROUP 1:	22.45	7.75
GROUP 2:	21.87	7.75
GROUP 3:	19.93	7.75
GROUP 4:	16.30	7.75
GROUP 5:	21.62	7.75

TRUCK DRIVERS CLASSIFICATIONS

GROUP 1 -"A-frame or Hydralift" trucks and Boom trucks or similar equipment when "A" frame or "Hydralift" and Boom truck or similar equipment is used; Buggymobile; Bulk Cement Tanker; Dumpsters and similar equipment, Tournorockers, Tournowagon, Tournotrailer, Cat DW series, Terra Cobra, Le Tourneau,

Westinghouse, Athye Wagon, Eucid Two and Four-Wheeled power tractor with trailer and similar top-loaded equipment transporting material: Dump Trucks, side, end and bottom dump, including semi-trucks and trains or combinations thereof with 16 yards to 30 yards capacity: Over 30 yards $.15 per hour additional for each 10 yard increment; Explosive Truck (field mix) and similar equipment; Hyster Operators (handling bulk loose aggregates); Lowbed and Heavy Duty Trailer; Road Oil Distributor Driver; Spreader, Flaherty Transit mix used exclusively in heavy construction; Water Wagon and Tank Truck-3,000 gallons and over capacity

GROUP 2 - Bulllifts, or similar equipment used in loading or unloading trucks, transporting materials on job site; Dumpsters, and similar equipment, Tournorockers, Tournowagon, Turnotrailer, Cat. D.W. Series, Terra Cobra, Le Tourneau, Westinghous, Athye wagon, Euclid two and four-wheeled power tractor with trailer and similar top-loaded equipment transporting material, Dump trucks, side, end and bottom dump, including semi-trucks and trains or combinations thereof with less than 16 yards capacity; Flatbed: (Dual Rear Axle); Grease Truck, Fuel Truck, Greaser, Battery Service Man and/or Tire Service Man; Leverman and loader at bunkers and batch plants; Oil tank transport; Scissor, Slurry Truck; Sno-Go and similar equipment; Swampers; Straddler Carrier (Ross, Hyster) and similar equipment; Team Driver; Tractor (small rubber-tired (when used within Teamster jurisdiction); Vacuum truck; Water Wagon and Tank trucks-less than 3,000 gallons capacity; Winch truck; Wrecker, tow truck and similar equipment

GROUP 3 - Flatbed: single rear axle; Pickup sweeper, Pickup Truck (Adjust upward by $2.00 per hour for onsite work)

GROUP 4 - Escort or pilot driver

GROUP 5 - Mechanic

HAZMAT PROJECTS

Anyone working on a HAZMAT job, where HAZMAT certification is required, shall be compensated as a premium, in addition to the classification working in as follows:

LEVEL C: +$.25 per hour - This level uses an air purifying respirator or additional protective clothing.

LEVEL B: +$.50 per hour - Uses same respirator protection as Level A. Supplied air line is provided in conjunction with a chemical "splash suit."

LEVEL A: +$.75 per hour - This level utilizes a fully-encapsulated suit with a self-contained breathing apparatus or a supplied air line.

ZONE DIFFERENTIAL

Zone pay will be calculated from the city center of the following listed cities:

BELLINGHAM	CENTRALIA	RAYMOND	OLYMPIA
EVERETT	SHELTON	ANACORTES	BELLEVUE
SEATTLE	PORT ANGELES	MT. VERNON	KENT
TACOMA	PORT TOWNSEND	ABERDEEN	BREMERTON

Zone A - 0 - 25 miles - Free Zone

Zone B - 25 - 45 miles - $ .70 per hour

Zone C - Over 45 miles - $1.00 per hour

WA980002 - 1

TEAM0760F 06/01/1998

	Rates	Fringes
EAST OF THE 120TH MERIDIAN: CHELAN AND KITTITAS COUNTIES (ANYONE WORKING ON HAZMAT JOBS SEE FOOTNOTE A BELOW)		
TRUCK DRIVERS:		
GROUP 1	18.63	7.06
GROUP 2	21.22	7.06
GROUP 3	21.33	7.06
GROUP 4	21.65	7.06
GROUP 5	21.76	7.06
GROUP 6	21.91	7.06
GROUP 7	22.44	7.06
GROUP 8	22.75	7.06

TRUCK DRIVERS CLASSIFICATIONS

GROUP 1: Escort Driver or Pilot Car; Employee Haul; Power Boat Hauling Employees or Material

GROUP 2: Fish Truck; Flat Bed Truck; Fork Lift (3000 lbs. and under); Trailer Mounted Hydro Seeder and Mulcher; Leverperson (loading trucks at bunkers); Seeder & Mulcher; Stationary Fuel Operator; Tractor (small, rubber-tired, pulling trailer or similar equipment)

GROUP 3: Auto Crane (2000 lbs. capacity); Buggy Mobile & Similar; Bulk Cement Tanks & Spreader; Dumptor (6 yds. & under); Flat Bed Truck with Hydraulic System; Fork Lift (3001-16,000 lbs.); Fuel Truck Driver; Steamcleaner & Washer; Power Operated Sweeper; Rubber-tired Tunnel Jumbo; Scissors Truck; Slurry Truck Driver; Straddle Carrier (Ross, Hyster, & similar); Tireperson; Transit Mixers & Truck Hauling Concrete (3 yd. to & including 6 yds.); Trucks, side, end, bottom and articulated end dump (3 yards to and including 6 yds.); Warehouseperson (to include shipping & receiving); Wrecker & Tow Truck

GROUP 4: A-Frame; Burner, Cutter, & Welder; Service Greaser; Trucks, side, end, bottom and articulated end dump (over 6 yds. to & including 12 yds.); Truck Mounted Hydro Seeder; Warehouseperson; Water Tank truck (0-8000 gallons)

GROUP 5: Dumpster (over 6 yds.); Lowboy (50 tons & under); Self-Loading Roll Off; Semi-Truck & Trailer; Tractor with Steer Trailer; Transit Mixers and Trucks Hauling Concrete (over 6 yds. to and including 10 yds.); Trucks, side, end, bottom and articulated end dump (over 12 yds. to & including 20 yds.); Truck-Mounted Crane (with load bearing surface either mounted or pulled)(up to 14 ton); Vacuum Truck (super sucker, guzzler, etc.)

GROUP 6: Flaherty Spreader Box Driver; Flowboys; Fork Lift (over 16,000 lbs.); Dumps (Semi-end); Lowboy (over 50 tons); Mechanic (Field); Transfer Truck and Trailer; Transit Mixers & Trucks Hauling Concrete (over 10 yds. to & including 20 yds.); Trucks, side, end, bottom and end dump (over 20 yds. to & including 40 yds.); Truck and Pup; Tournarocker, DW's & similar

with 2 or more 4 wheel-power tractor with trailer, gallonage or yardage scale, whichever is greater; Water Tank Truck (8,001-14,000 gallons)

GROUP 7: Oil Distributor Driver; Stringer Truck (cable operated trailer); Transit Mixers & Hauling Concrete (over 20 yds.); Truck, side, end, bottom and articulated end dump (over 40 yds. to & including 100 yds.); Truck Mounted Crane (with load bearing surface either mounted or pulled (16 through 25 tons)

GROUP 8: Prime Movers and Stinger Truck; Trucks, side, end, bottom and articulated end dump (over 100 yds.); Helicopter Pilot Hauling Employees or Materials

Footnote A- Anyone working on a HAZMAT job, where HAZMAT certification is required, shall be compensated as a premium, in additon to the classification working in as follows:

LEVEL D: - $.25 PER HOUR (This is the lowest level of protection. No respirator is used and skin protection is minimal.

LEVEL C: - $.50 PER HOUR (This level uses an air purifying respirator or additional protective clothing.

LEVEL B: - $.75 PER HOUR (Uses same respirator protection as Level A. Supplied air line is provided in conjunction with a chemical "spash suit."

LEVEL A: - $1.00 PER HOUR (this level utilizes a fully-encapsulated suit with a self-contained breathing apparatus or a supplied air line.

WELDERS - Receive rate prescribed for craft performing operation for which welding is incidental.

Unlisted classifications needed for work not included within the scope of the classifications listed may be added after award only as provided in the labor standards contract clauses (29 CFR 5.5(a)(1)(v)).

In the listing above, the "SU" designation means that rates listed under that identifier do not reflect collectively bargained wage and fringe benefit rates. Other designations indicate unions whose rates have been determined to be prevailing.

WAGE DETERMINATION APPEALS PROCESS

1.) Has there been an initial decision in the matter? This can be:

* an existing published wage determination
* a survey underlying a wage determination
* a Wage and Hour Division letter setting forth a position on a wage determination matter
* a conformance (additional classification and rate) ruling

On survey related matters, initial contact, including requests for summaries of surveys, should be with the Wage and Hour Regional Office for the area in which the survey was conducted because those Regional Offices have responsibility for the Davis-Bacon survey program. If the response from this initial

contact is not satisfactory, then the process described in 2.) and 3.) should be followed.

With regard to any other matter not yet ripe for the formal process described here, initial contact should be with the Branch of Construction Wage Determinations. Write to:

Branch of Construction Wage Determinations
Wage and Hour Division
U. S. Department of Labor
200 Constitution Avenue, N. W.
Washington, D. C. 20210

2.) If the answer to the question in 1.) is yes, then an interested party (those affected by the action) can request review and reconsideration from the Wage and Hour Administrator (See 29 CFR Part 1.8 and 29 CFR Part 7). Write to:

Wage and Hour Administrator
U.S. Department of Labor
200 Constitution Avenue, N. W.
Washington, D. C. 20210

The request should be accompanied by a full statement of the interested party's position and by any information (wage payment data, project description, area practice material, etc.) that the requestor considers relevant to the issue.

3.) If the decision of the Administrator is not favorable, an interested party may appeal directly to the Administrative Review Board (formerly the Wage Appeals Board). Write to:

Administrative Review Board
U. S. Department of Labor
200 Constitution Avenue, N. W.
Washington, D. C. 20210

4.) All decisions by the Administrative Review Board are final.

END OF GENERAL DECISION

This page intentionally blank

TABLE OF CONTENTS

SECTION C - TECHNICAL SPECIFICATIONS

Section No.	Section Title
	DIVISION 1 - GENERAL REQUIREMENTS
01001	Supplementary Requirements
01005	Site Specific Supplementary Requirements
01025	Payment
01035	Modification Procedures
01061	Environmental Protection
01300	Submittals
01320	Project Schedule
01451	Contractor Quality Control
01501	Construction Facilities and Temporary Controls
01701	Operations and Maintenance Manuals
01702	As Built Records and Drawings
01703	Warranty of Construction
01704	Form 1354 Checklist
01705	Equipment-In-Place List
	DIVISION 2 - SITEWORK
02050	Demolition
02210	Grading
02221	Excavation, Filling and Backfilling for Buildings
02222	Excavation, Trenching and Backfilling for Utilities Systems
02225	Earthwork for Roadways and Parking Lots
02241	Aggregate Base Course
02511	Concrete Sidewalks and Curbs and Gutters
02551	Bituminous Paving for Roads, Streets and Open Storage Areas
02558	Bituminous Tack Coat
02580	Pavement Markings
02660	Water Distribution
02698	Prefabricated Underground Heating/Cooling Distribution System
02720	Storm-Drainage System
02730	Sanitary Sewers
02811	Underground Sprinkler Systems
02935	Turf
02950	Trees, Shrubs, Ground Covers and Vines

TABLE OF CONTENTS (con.)

Section No.	Section Title
	DIVISION 3 - CONCRETE
03100	Structural Concrete Formwork
03200	Concrete Reinforcement
03250	Isolation Joints, Shrinkage Control Joints, and Waterstops
03300	Concrete for Building Construction
03300A	Controlled Low Strength Material (CLSM)
03450	Precast Architectural Concrete
	DIVISION 4 - MASONRY
04255	Nonbearing Masonry Veneer/Steel Stud Walls
	DIVISION 5 - METALS
05055	Welding, Structural
05120	Structural Steel
05210	Steel Joists
05300	Steel Decking
05500	Miscellaneous Metal
	DIVISION 6 - WOODS AND PLASTICS
06100	Rough Carpentry
06200	Finish Carpentry
	DIVISION 7 - THERMAL AND MOISTURE PROTECTION
07112	Bituminous Waterproofing
07220	Roof Insulation
07250	Spray-Applied Fireproofing
07270	Firestopping
07412	Non-Metal Roof System
07530	Elastomeric Roofing (EPDM)
07600	Sheet Metalwork, General
07920	Joint Sealing

TABLE OF CONTENTS (con.)

Section No.	Section Title
	DIVISION 8 - DOORS AND WINDOWS
08110	Steel Doors and Frames
08120	Aluminum Doors and Frames
08201	Wood Doors
08330	Overhead Rolling Doors
08331	Metal Coiling Counter Doors
08353	Operable Partition
08520	Aluminum Windows
08700	Builders' Hardware
08810	Glass and Glazing
08950	Insulated Translucent Fiberglass Skylight System
	DIVISION 9 - FINISHES
09250	Gypsum Wallboard
09310	Ceramic Tile
09510	Acoustical Ceilings
09650	Resilient Flooring and Mats
09680	Carpet
09900	Painting, General
09950	Wall Coverings
	DIVISION 10 - SPECIALTIES
10160	Toilet Partitions
10430	Exterior Signage
10440	Interior Signage
10505	Metal Lockers
10520	Fire Extinguisher Cabinets and Accessories
10800	Toilet Accessories
	DIVISION 11 - EQUIPMENT
11132	Projection Screens

TABLE OF CONTENTS (con.)

Section No.	Section Title
	DIVISION 12 - FURNISHINGS
12390	Cabinets and Countertops
12520	Window Treatment
12675	Floor Mat and Frame
12705	Prewired Workstations
12705A	Prewired Workstations Sets
12710	Theater Chairs
	DIVISION 13 - SPECIAL CONSTRUCTION
	~~(Not used)~~
13080	Seismic Protection for Mechanical, Electrical Equipment
	DIVISION 14 - CONVEYING SYSTEM
14240	Elevators, Hydraulic
	DIVISION 15 - MECHANICAL
15250	Thermal Insulation for Mechanical Systems
15330	Wet Pipe Sprinkler System, Fire Protection
15400	Plumbing, General Purpose
15488	Gas Piping Systems
15556	Hot Water Heating and Chilled Water Systems
15569	Water Heating; \Gas; Up to 20 Mbtuh
15650	Central Refrigerated Air Conditioning System
15895	Air Supply, Distribution, Ventilation and Exhaust System
15951	Direct Digital Control for HVAC
15990	Testing, Adjusting and Balancing of HVAC Systems
15995	Commissioning of HVAC Systems

DIVISION 16 - ELECTRICAL

16370	Electrical Distribution System, Aerial
16375	Electrical Distribution System, Underground
16415	Electrical Work, Interior
16528	Exterior Lighting
16710	Premises Distribution System
16721	Fire Detection and Alarm System
16770	Paging Systems

END OF SECTION

SECTION 01001

SUPPLEMENTARY REQUIREMENTS

PART 1 GENERAL

1.1 DEFINITIONS

The references listed below are to be defined as indicated wherever they may be used in the TECHNICAL SPECIFICATIONS.

"SUPPLEMENTARY REQUIREMENTS " shall be read to pertain to any of the sections of the DIVISION 1 as required by the content of the section or paragraph containing the reference.

Specification “SECTION 01300 – SUBMITTALS” shall be read as a specification “SECTION 01330 – SUBMITTALS”.

Specification “SECTION 01400 – CONTRACTOR QUALITY CONTROL” shall be read as a specification “SECTION 01451 – CONTRACTOR QUALITY CONTROL”.

1.2 CONSTRUCTION SCHEDULING

The instructions for preparation and submittal of the Contractor-prepared Project Schedule are found in SECTION 01320, PROJECT SCHEDULE.

1.3 CORRESPONDENCE

1.3.1 All correspondence shall be addressed to the Administrative Contracting Officer, shall be serially numbered commencing with Number 1, with no numbers missing or duplicated and shall be furnished with an original and one copy. Enclosures attached or transmitted with the correspondence shall also be furnished with an original and one copy. Each serial letter shall make reference to the contract name, contract number and shall have only one subject.

1.3.2 All correspondence from the Contracting Officer will be also serially numbered with no numbers missing or duplicated. Letters to the Contractor will be forwarded in duplicate.

1.3.3 In the event there is more than one project within a contract, correspondence shall contain separate and distinct submittals to identify each project by name.

1.3.4 For submission of Contractor payment requests, See Section 01025, PAYMENT.

1.4 ADVANCED NOTICE OF CONTRACTOR PERFORMED ACCEPTANCE TESTING

The Contractor shall notify the Contracting Officer a minimum of 20 days prior to performing any acceptance or "buy off" testing of the following systems, (1) EMCS, (2) Fire Detection/Protection, (3) Intrusion Detection System, (4) Uninterruptible Power Supply, and (5) HVAC. Advance notification is not required for testing performed as part of fabrication or installation.

1.5 CONTRACTOR'S FILES

Contractor shall maintain "Approved (Action Code "A") and "Approved Except as Noted (Action Code "B") shop drawing files in fabrication shops and at project sites for government use.

1.6 AUDIO-VIDEO RECORDINGS

1.6.1 General

The Contractor shall provide all equipment, materials, and trained personnel to visually and audibly record (video tape) all on site operations and maintenance (O&M) training sessions for this contract. The video technician shall be employed by a video production company that has been in business for a minimum of 2 years. The Contractor shall submit the resume of the technician and video production company. Video tapes shall be produced in the VHS format. Audio shall be adjusted, filtered or otherwise controlled to insure that the trainer can be understood at all times. Each system or piece of equipment shall be covered in a single tape or set of tapes which shall be correlated with the O&M manuals provided. Video tapes and their individual storage cases shall be identified with a typewritten label showing the project, equipment or system, and contract number; this same information shall be provided as an introduction on each video tape. When two or more tapes are provided, they shall be submitted as a set in an appropriate storage container.

1.6.2 Submittals

Prior to conducting the training sessions the following shall be submitted for approval:

1) A training plan consisting of the agenda or an outline breakdown of the proposed presentation and

2) The qualifications of the trainer and the video recording technician

Two copies of the video taped material shall be submitted to the Contracting Officer within 10 days after completion of video taping the training sessions.

1.7 MECHANICAL AND ELECTRICAL LAYOUT DRAWINGS

The Contractor shall submit, for Contracting Officer's approval, scaled layout drawings, including appropriate elevations and sections, as required, showing the room arrangement the Contractor proposes for all pieces of mechanical and electrical equipment and appurtenances thereto, such as but not limited to: air conditioning equipment, boilers, compressors, hot water tanks, pumps, electrical control panels, ducts and piping, that are to be located in the room. Mechanical and electrical layouts shall be coordinated to eliminate any conflicts of installed equipment. No payments will be made to the Contractor for furnishing or installing equipment until the layout drawings have been approved by the Contracting Officer. Mechanical and electrical equipment layout drawings shall be identified and submitted as specified herein. Equipment rooms shown on the drawings are of adequate size to accommodate equipment of required capacities as available from several manufacturers with sufficient space left for access, servicing, and removal. The use of equipment items with dimensions such as "to crowd the space" will not be permitted.

1.8 COLOR BOARDS

Three sets of color boards shall be submitted within 60 calendar days after receipt of Notice to Proceed. The board shall include samples of colors and finishes of every finish such as on walls, floors, and ceilings. This would include, but not be limited to, paint, floor and wall tile, acoustical panels, carpet, wall base, plastic laminate, etc. Where special finishes such as architectural concrete or prefinished metal panels are required, samples of not less than 12 inches square shall be submitted with the board. Boards shall include, where applicable, color samples of integrally colored block, brick, and prefinished metal roofing and siding. The board shall be 24 inches by 24 inches. If more space is needed, more than one board per set may be submitted. This is not meant to replace the samples called for in other portions of the specifications. The Contractor shall certify that he has reviewed the color boards in detail and that they are in strict accordance with the contract drawings and specifications, except as may be otherwise explicitly stated.

1.9 IDENTIFICATION OF EMPLOYEES AND MILITARY REGULATIONS:

(a) The Contractor shall be responsible for compliance with all regulations and orders of the Commanding Officer of the Military Installation, respecting identification of employees, movements on installation, parking, truck entry, and all other military regulations which may affect the work.

(b) The work under this Contract is to be performed at an operating Military Installation with consequent restrictions on entry and movement of nonmilitary personnel and equipment.

1.10 PRESERVATION OF HISTORICAL, ARCHEOLOGICAL AND CULTURAL RESOURCES (1985 JAN OCE): If, during construction activities, the Contractor observes items that might have historical or archeological value, such observations shall be reported immediately to the Contracting Officer so that the appropriate authorities may be notified and a determination can be made as to their significance and what, if any, special disposition of the finds should be made. The Contractor shall cease all activities that may result in the destruction of these resources and shall prevent his employees from trespassing on, removing, or otherwise damaging such resources.

1.11 SPECIAL SAFETY REQUIREMENTS:

In addition to Safety and Health Requirements Manual EM 385-1-1, dated September 1996, the Contractor shall comply with the requirements listed below. Paragraph numbers refer to EM 385-1-1 or are added thereto.

(a) Paragraph 01.A.12: Add new paragraph: Safety Personnel. The Contractor shall designate a person on his staff to manage the Contractor's safety and accident prevention program. This person will provide a point of contact for the Contracting Officer on matters of job safety, and shall be responsible for ensuring the health and safety of on site personnel.

(b) Paragraph 01.D.02, revise as follows:

(1) Replace paragraph 01.D.02c with the following:
"c. Property damage in excess of $2,000.00

(2) Add new paragraph d as follows:

"An injury resulting in a lost workday,
not including the day of injury."

1.12 TIME EXTENSIONS FOR UNUSUALLY SEVERE WEATHER (ER 415-1-15 31 OCT 89)

This Paragraph specifies the procedure for the determination of time extensions for unusually severe weather in accordance with the CONTRACT CLAUSE entitled "Default (Fixed Price Construction)". In order for the Contracting Officer to award a time extension under this clause, the following conditions must be satisfied:

1.12.1 The weather experienced at the project site during the contract period must be found to be unusually severe, that is, more severe than the adverse weather anticipated for the project location during any given month.

1.12.2 The unusually severe weather must actually cause a delay to the completion of the project. The delay must be beyond the control and without the fault or negligence of the contractor.

1.12.3 The following schedule of monthly anticipated adverse weather delays is based on National Oceanic and Atmospheric Administration (NOAA) or similar data for the project location and will constitute the base line for monthly weather time evaluations. The contractor's progress schedule must reflect these anticipated adverse weather delays in all weather dependent activities.

MONTHLY ANTICIPATED ADVERSE WEATHER DELAY
WORK DAYS BASED ON (5) DAY WORK WEEK

JAN	FEB	MAR	APR	MAY	JUN	JUL	AUG	SEP	OCT	NOV	DEC
9	8	8	4	2	3	1	2	4	7	10	10

1.12.4 Upon acknowledgment of the notice to proceed (NTP) and continuing throughout the contract, the contractor will record on the daily QCQ report, the occurrence of adverse weather and resultant impact to normally scheduled work. Actual adverse weather delays must prevent work on critical activities for 50 percent or more of the contractor's scheduled work day.

1.12.5 The number of actual adverse weather delay days shall include days impacted by actual adverse weather (even if adverse weather occurred in previous month), be calculated chronologically from the first to the last day of each month, and be recorded as full days. If the number of actual adverse weather delay days exceeds the number of days anticipated in paragraph 1.15.3, above, the Contracting Officer will convert any qualifying delays to calendar days, giving full consideration for equivalent fair weather work days, and issue a modification in accordance with the contract clause entitled "Default (Fixed Price Construction)".

PARTS 2 AND 3 NOT USED

END OF SECTION

SECTION 01005

SITE SPECIFIC

SUPPLEMENTARY REQUIREMENTS

1. CONDUCT OF WORK

1.1 COORDINATION AND ACCESS TO SITE

1.1.1 Coordination with using agencies shall be made through the Contracting Officer to assist the Contractor in completing the work with a minimum of interference and inconvenience.

1.1.2 All vehicles and drivers entering McChord Air Force Base installation shall have valid current licenses. Those entering in privately-owned vehicles or unmarked Contractor vehicles shall obtain a visitor's pass each time they enter unless that vehicle will be repeatedly used; then Contractor is responsible for obtaining vehicle permits from the Security Police.

1.1.4 Work hours in the construction area will be restricted to 0730 to 1600 daily, Monday through Friday, excluding holidays. Work hours other than as specified above shall be coordinated with and approved by the Contracting Officer.

1.2 UTILITY OUTAGES

Contractor shall coordinate utility outages in writing with the Contracting Officer at least 7 days in advance. Outages shall be kept to a minimum and any one outage shall not last more than 2 hours.

1.3 PROTECTION OF GOVERNMENT PROPERTY

In addition to requirements of the CONTRACT CLAUSES, Contractor shall protect all Government property within the buildings in which he is working, except for such property as is required to be demolished. Property which is to be demolished shall be protected until its scheduled demolition time. Protection shall include, but not be limited to, protection from construction generated dust, debris, water, and vibration.

1.4 COORDINATION, SAFETY AND REGULATORY REQUIREMENTS

1.4.1 All Contractor’s operations shall be conducted in strict accordance with FAR Clause 252.236-7005, AIRFIELD SAFETY PRECAUTIONS (See Special Clauses).

1.4.2 Construction traffic operating on or crossing taxiways open to aircraft traffic shall be under control by flagmen. When conflicts arise between construction activities, aircraft operations and safety, aircraft operation and safety shall take precedence and shall govern. Construction sequencing shall be coordinated with airfield management through the Contracting Officer (CO). Capability to clean up foreign object debris (FOD) immediately will be required for pavement to be opened to traffic or areas open to air traffic within construction limits as directed by CO.

1.4.2.1 Traffic Control

Whenever contract activities obstruct traffic, the Contractor shall arrange for safe and efficient direction of traffic around the obstruction. All situations requiring traffic control shall be coordinated in advance through the on-site representative of the Contracting Officer as required under Section 01501 CONSTRUCTION FACLITIES AND TEMPORARY CONTROLS.

1.4.2.2 Hauling Materials On and Off Base

1.4.2.2.1 Delivery of equipment and material will only be allowed over base roads between 0730 and 1600, Monday through Friday. The Contractor shall use the designated haul route.

1.4.2.2.2 All trucks hauling loose material shall be tarped or enclosed.

1.4.2.2.3 The Contractor shall clean up all construction debris from the construction area continuously.

1.4.2.2.4 Use of alternate haul routes must be coordinated through the on-site representative of the Contracting Officer prior to changes.

1.4.2.2.5 The Contractor my use the North Gate for construction access to the base as an alternative haul route if the following conditions are met:

a. Provide a security guard at the gate when used for construction access. All guards shall attend a 1/2 hour indoctrination with base security forces and abide by the instructions from that training. Guard shall not allow non-construction vehicles to enter or exit, unless otherwise instructed by the Contracting Officer or base security forces.

b. Upon direction of the Contracting Officer, furnish and install a painted 36 inch by 48 inch brown sign with white lettering: Construction Vehicles Only; remove sign on direction of the Contracting Officer.

c. Submit a plan for identifying construction vehicles (decal, windshield sign, etc).

d. Notify the Contracting Officer 48 hours in advance of using the North Gate, and obtain Contracting Officer approval of proposed alternate haul route.

1.4.2.3 Temporary Signs and Barricades

1.4.2.3.1 Temporary Signs

a. Temporary signs are those indicating detours, flagmen, temporary construction, and like items. When the temporary warning is no longer needed, the Contractor shall remove the signs from the site.

b. Cones shall be used only for temporary detours.

c. At no time shall temporary signs be left lying in the area, nor shall they be left in place when not required.

1.4.2.3.2 Barricades and Safety Fencing

a. Barricades shall be used when overnight and long-term warning devices are required, and shall be lighted where required.

b. The Contractor shall provide temporary safety fencing around trenches and other open excavations, such as existing fueling hydrant pits being removed.

c. The Contractor shall barricade all trenches and detours per applicable state and Federal standards.

1.4.2.3.3 Maintenance

All barricades and temporary signs shall be maintained in a good state of repair with all stripes and colors readily visible. The on-site representative of the Contracting Officer is the sole judge as to what barricades and cones are acceptable. When the contract is complete or the cones/signs/barricades are no longer required, they shall be removed from the base and the area returned to as-found conditions.

1.4.3 Asphalt millings, broken concrete, and waste aggregate shall be disposed of off the Government property. The Contractor shall be solely responsible for the disposal in accordance with all applicable federal, state and local regulations, at no additional cost to the Government.

1.4.4 Vehicles and equipment within 200 feet of the centerline of an active taxiway must give way to aircraft. No storage , parking, or other objects higher than 24 inches are allowed to be stored within 200 feet from the centerline of an active taxiway.

1.4.5 Pavements, drives or turf areas utilized by the Contractor for access roads or storage areas shall be maintained and restored by the Contractor to the original condition, to the satisfaction of the Contracting Officer and airfield management. Costs associated with the above work shall be incidental to the contract.

1.4.5.1 Temporary access roads shall be crushed stone on geotech cloth at a minimum, and shall be well-maintained at all times.

1.4.5.2 The Contractor shall be responsible for any repair necessary to stabilize permanent roadways transversed by temporary access roadways and traffic.

1.4.6 Before construction commences, the Contractor shall coordinate with the Contracting Officer to locate utilities. A permit is required for locating base utilities. Contractor shall allow a minimum of 14 days to obtain permit and shall be responsible for marking limits of construction areas with white paint or white flagging so utilities may be located.

1.4.7 A 103 Digging Permit will be required before construction excavation commences. Digging permits expire 30 days after date issued and must be renewed.

1.4.8 A Flight Line Driving Pass and Temporary ID's issued by Base Security will be required for construction personnel working on base. Contractor shall provide a list of employees with driver's license and social security numbers prior to construction. Base Operations will brief all workers and truck drivers on flight line driving procedures. The briefing will take approximately 1 hour.

1.4.9 Fire extinguishers will be required on construction equipment. A 10 ABC minimum rating is required for fire extinguishers.

1.4.10 Welding permits will be required. The Contractor shall contact the Base Fire Department for required permits.

1.4.11 Blasting is prohibited on air base property.

1.4.14 Prior to use of a nuclear density gauge on airfield the Contractor shall complete a NRC 241 Form and submit his license to the Base Bioenvironmental Engineer.

1.4.15 All workers working in the area adjacent to the active taxiway will be required to participate in a 30-minute one time briefing.

1.5 SPECIAL PROVISIONS FOR C-17 CONSTRUCTION

1.5.1 General

The C-17 construction effort at McChord AFB involves the simultaneous accomplishment of several facility construction projects. This creates the potential for interference unless measures are taken to coordinate individual contract operations. The purpose of these site and roadway management requirements is to establish ground rules for contractor operations on the Base. As applicable, these items supplement the requirements of other sections of the specifications including Section 01501 CONSTRUCTION FACLITIES AND TEMPORARY CONTROLS. The Contractor, in conjunction with and in cooperation with other contractors using the roads, sites and work areas shall be expected to:

a. Maintain a clean and neat work-site, staging, and parking area. See paragraph CONSTRUCTION SITE MANAGEMENT AND APPEARANCE STANDARDS for details.

b. Repair any road damage caused by contract operations.

c. Restore work site, staging/parking areas, and site access routes to match the original conditions upon project completion.

1.5.2 General Conditions

1.5.2.1 Contractor Staging and Parking Areas

a. Refer to contract drawings and the specifications for location of staging and parking areas. For those worksites located on or near McChord's airfield, note that the location of staging and parking areas must be at least 125 feet from the edge of aircraft parking ramps, and 200 feet from the centerline of airfield taxiway.

b. Any tree cutting required to provide a staging area shall be coordinated through the on-site representative of the Contracting Officer.

c. The Contractor’s equipment and vehicles shall be assigned to park in specific areas. The only exceptions shall be heavy equipment which is actively engaged in daily activities.

d. All Contractor trailers, stored materials, and idle equipment shall be located in the designated staging area. The staging area shall be kept clean and orderly. Tarps are to be used, as necessary, to secure loose materials. The on-site representative of the Contracting Officer is the sole judge as to what constitutes an acceptable staging area. Dumpsters may be located outside the staging area, but must be sited as approved by the on-site representative of the Contracting Officer. Any movement of a dumpster to another area on the project site must be approved by the CO's representative. Dumpsters shall not be permitted to overflow, and shall be emptied before reaching that condition.

e. All items in the staging area shall be promptly removed from McChord AFB when no longer needed or when the contract is completed.

f. The Contractor shall provide, to the on-site representative of the Contracting Officer, a staging area layout showing trailer location, material storage, and equipment/vehicle parking together with the number of workers and parking spaces required.

1.5.3 Specific Conditions

1.5.3.1 Special Events

McChord AFB is scheduled to host some special events during the contract effort. During the course of these events, more stringent standards may be required for contract operations. Examples are stricter requirements for staging areas, worksites, and haul routes. The on-site representative of the Contracting Officer will provide specific requirements to the Contractor. The special events, and their approximate time periods are noted below. Should the times change, the on-site representative of the Contracting Officer will notify the Contractor accordingly.

1.5.3.2 Project Site

1.5.3.2.1 Weather Protection

Temporary coverage of the worksite to protect against moisture shall be effectively secured down. The on-site representative of the Contracting Officer will be the sole judge of what constitutes effective measures to protect the site.

1.5.4 Restricted Area Access

The project site is not in a restricted area. However, the project site is adjacent to restricted areas and active airfield pavements. The haul route crosses an active taxiway and through a restricted area.

1.5.4.1 Restricted areas are designated by a red line or red rope with signage "DO NOT CROSS". No restricted area boundary adjustments are anticipated, but if become necessary, the Contracting Officer will coordinate the adjustment with McChord AFB Security Police.

1.5.5 Work Adjacent To Airfield Pavements

Any work within the airfield pavement clearance area is permitted only when the pavement is closed to aircraft or around aircraft operations. If working around aircraft operations, all personnel, equipment and material shall yield immediately to the aircraft by leaving the airfield pavement clearance area. The

clearance area is defined as no higher than 24 inch and within 200 feet from a taxiway centerline or 125 feet from the edge of an aircraft parking apron.

1.6 MAINTENANCE REQUIREMENTS

1.6.1 The Contractor shall maintain strict dust control to prevent blowing dust at all times.

1.6.2 The Contractor shall assure that the hauling route and access route to the job site are maintained by vacuum type sweeping as required to assure no damage to Government and personal property during the performance period. All cleanup on airfield pavements shall be done with a vacuum-type airfield sweeper. The Contractor shall employ, full time, through the duration of the project, one vacuum-type sweeper to sweep airfield pavements and haul routes during construction according to the schedule below. The Contractor shall make a second vacuum-type sweeper available within 24 hours should the first sweeper break down.

1.6.2.1 Crossings of Active Airfield Pavements

Sweep continually as long as hauling is taking place, the surfaces are being traveled on by Contractor vehicles, or construction is occurring in the area.

1.6.2.2 Haul Route

During hauling, sweep all roads used for hauling at the end of each shift.

1.6.2.3 All hauling operations shall cease any time that there is no operational vacuum sweeper. Should the non-operational sweeper be down for more than 24 hours, a second sweeper shall be brought in before the end of the 24 hours. Delays caused by the lack of an operational vacuum sweeper will be the responsibility of the Contractor.

2. CONSTRUCTION SITE MANAGEMENT AND APPEARANCE STANDARDS

2.1 GENERAL

2.1.1 Contractor’s trailers and storage buildings must follow the base paint standards. The Contractor shall maintain the trailers and storage buildings in good condition or must remove them. The Contractor is responsible for the security of his property and general housekeeping of the area(s).

2.1.2 Dirt and Dust Control Plan:

The Contractor shall submit a plan for controlling dirt, debris, and dust on base roadways. As a minimum, the plan shall identify the subcontractor and equipment for cleaning along the haul route and measures to reduce dirt, dust, and debris from roadways.

2.2 CONTRACTOR’S TEMPORARY FACILITIES

Contractor shall screen grouped temporary facilities from the public view.

2.2.1 Temporary Facilities Layout Plan:

Prior to starting the work, the Contractor shall submit site plan through the Contracting Officer for the Base Civil Engineer approval, showing the layout and details of all temporary facilities used for this contract. The plan shall include the location of the safety and construction fences, location of all site trailers, equipment and material storage areas, construction entrances, trash dumpsters, temporary sanitary facilities, and worker parking areas. Site photographs prior to the start of work may be included with the plan. At completion of work, the Contractor shall remove the facilities and restore the site to its original condition.

2.2.2 Administrative Field Offices and Material Storage Trailers:

Contractor's administrative field office and storage trailers shall be in like new condition and the exterior shall be the base standard color: beige (Federal Standard 595 (D), Color #37150, which is equivalent to Sherwin Williams #2032). Locate the office and trailers behind the construction fence unless otherwise indicated on the drawings. Storage of materials or debris under the trailers is prohibited.

2.2.3 Material Storage Area:

This area is for storage of construction materials that are needed within one week at the construction site and those that are not immediately required at the construction site. The location is indicated on the drawings. The Contractor is responsible for the security of the stored property and general housekeeping.

2.2.4 Dumpsters:

Equip dumpsters with a secure cover and paint the standard base color -- beige (Federal Standard 595(D), Color #37150, which is equivalent to Sherwin Williams #2032). The cover shall be closed at all times, except when being loaded with trash and debris. Locate dumpsters behind the construction fence or out of the public view. Dumpsters shall not be permitted to overflow, and shall be emptied before reaching that condition, at least once a week, or as needed to keep the site free of debris and trash. If necessary, provide 208 liter trash containers painted the standard base color - dark brown (Federal Standard 595 b, Color #10055) to collect debris in the construction site area. Locate the trash containers behind the construction fence or out of the public view. Empty trash containers at least once a day. Large demolition normally requires a large dumpster without lids—these are acceptable but shall not have debris higher than the sides before emptying.

2.2.5 Temporary Sanitation Facilities:

All temporary sewer and sanitation facilities shall be self contained units with both urinals and stool capabilities. Ventilate the units to control odors and fumes and empty and clean them at least once a week or more often if required by the Contracting Officer. The doors shall be self-closing. The exterior color of the unit shall be the base standard: beige (Federal Standard 595(D), Color #37150, which is equivalent to Sherwin Williams #2032). Locate the facility behind the construction fence or out of the public view.

2.2.6 Construction and Safety Fence

Enclose the construction site and supplemental storage area with a 8 feet high chain link fence with brown, UV light resistant, plastic fabric mesh netting (similar to tennis court), and gates. Remove the fence upon completion and acceptance of the work. The intent is to block the construction from public view.

The Contractor shall also provide a temporary safety fence with gates and warning signs at the construction site prior to the start of work to protect the public from construction activities. The safety fence shall enclose those areas not within the construction fence. The safety fence shall be the base standard: beige (Federal Standard 595(D), Color #37150, which is equivalent to Sherwin Williams #2032), or bright orange where it protects excavated areas, high density polyethylene grid or approved equal, a minimum of 3.5 feet high, supported and tightly secured to steel posts located minimum 10 feet on centers. The Contractor shall remove the fence from the work site upon completion of the contract.

2.3 GRASS CUTTING

Cut grass (or annual weeds) within the construction and storage sites to a 4 feet height at least once a week during the growing season unless the grass area is not visible to the public. Trim the grass around fences at time of grass cutting. Grass or weeds on stockpiled earth shall be maintained as described above.

END OF SECTION

SECTION 01025

PAYMENT

PART 1 GENERAL

1.1 GENERAL

The contract price for each item shall constitute full compensation for furnishing all plant, labor, materials, appurtenances, and incidentals and performing all operations necessary to construct and complete the items in accordance with these specifications and the applicable drawings, including surveying performed by the Contractor. Payment for each item shall be considered as full compensation, notwithstanding that minor features may not be mentioned herein. Work paid for under one item will not be paid for under any other item. No separate payment will be made for the work, services, or operations required by the Contractor, as specified in DIVISION 1, GENERAL REQUIREMENTS, to complete the project in accordance with these specifications; all costs thereof shall be considered as incidental to the work.

1.2 PAYMENT

1.2.1 ITEM NO. 0001 (BASE ITEM)

Payment will be made at the contract lump sum price for Item No. 0001, All Work for the C-17 Squadron Operations/AMU Facility, Complete to a line 5 Feet outside the Building Walls, Except for Item 0006, payment of which shall constitute full compensation for Item No. 0001, complete.

1.2.2 ITEM NO. 0002 (BASE ITEM)

Payment will be made at the contract lump sum price for Item No. 0002, All Work for Site Work and Utilities Beyond a Line 5 Feet Outside the Building Walls, Except for Items 0003, 0004, and 0005, payment of which shall constitute full compensation for Item No. 0002, complete.

1.2.3 ITEM NO. 0003 (OPTIONAL ITEM)

Payment will be made at the contract lump sum price for Item No. 0003, All Work for Re-Alignment of Cross Taxiway Road and Installation of the Road Irrigation System, payment of which shall constitute full compensation for Item No. 0003, complete.

1.2.4 ITEM NO. 0004 (OPTIONAL ITEM)

Payment will be made at the contract lump sum price for Item No. 0004, All Work for Expanded North Parking Lot Area, payment of which shall constitute full compensation for Item No. 0004, complete.

1.2.5 ITEM NO. 0005 (OPTIONAL ITEM)

Payment will be made at the contract lump sum price for Item No. 0005, All Work for Planting of Street Trees, payment of which shall constitute full compensation for Item No. 0005, complete.

1.2.6 ITEM NO.0006 (OPTIONAL ITEM)

Payment will be made at the contract lump sum price for Item No. 0006, All Work for Prewired Workstations, payment of which shall constitute full compensation for Item No. 0006, complete.

1.3 PROGRESS PAYMENT INVOICE

Requests for payment shall be submitted in accordance with Federal Acquisition Regulations (FAR) Subpart 32.9, entitled "PROMPT PAYMENT", and Paragraphs 52.232-5 and 52.232-27, entitled "Payments Under Fixed-Price Construction Contracts", and "Prompt Payment for Construction Contracts", respectively. In addition each request shall be submitted in the number of copies and to the designated billing office as shown in the Contract.

1.3.1 When submitting payment requests, the Contractor shall complete Blocks 1 through 12 of the "PROGRESS PAYMENT INVOICE" Form as directed by the Contracting Officer. (A sample form is attached at the end of this Technical Specification Section.) The completed form shall then become the cover document to which all other support data shall be attached.

1.3.2 One additional copy of the entire request for payment, to include the "PROGRESS PAYMENT INVOICE" cover document, shall be forwarded to a separate address as designated by the Contracting Officer.

1.3.3 The Contractor shall submit with each pay request, a list of subcontractors that have worked during that pay period. The listing shall be broken down into weeks, identifying each subcontractor that has worked during a particular week, and indicate the total number of employees that have worked on site for each subcontractor for each week. The prime Contractor shall also indicate the total number of employees for its on site staff for each week.

PARTS 2 and 3 NOT USED

PROGRESS PAYMENT INVOICE

See Federal Acquisition Regulations (FAR) 32.900, 52.232-5, & 52.232-27

1. PROJECT AND LOCATION	2. DATE
3. CONTRACTOR NAME AND ADDRESS (Must be the same as in the Contract)	4. CONTRACT NO. _____ 5. INVOICE NO.
6. DESCRIPTION OF WORK	7. PERIOD OF PERFORMANCE From: To:
8. DISCOUNT TERMS	
9. OFFICIAL TO WHOM PAYMENT IS TO BE FORWARDED Name: Title: Phone: ( ) -	10. OFFICIAL TO BE NOTIFIED OF DEFECTIVE INVOICE Name: Title: Phone ( ) -

11. CERTIFICATION: I hereby certify, to the best of my knowledge and belief, that

(1) The amounts requested are only for the performance in accordance with the specifications, terms, and conditions of this contract;

(2) Payments to subcontractors and suppliers have been made from previous payments received under the contract, and timely payments will be made from the proceeds of the payment covered by this certification, in accordance with subcontract agreements and the requirements of Chapter 39 of Title 31, United States Code;

and

(3) This request for progress payment does not include any amounts which the prime contractor intends to withhold or retain from a subcontractor or supplier in accordance with the terms and conditions of the subcontract.

_____ _____ _____

(Signature) **(Title)** **(Date)**

12. OTHER INFORMATION OR DOCUMENTATION required by Contract. Provide two (2) copies of each (check and attach if applicable): _____ Updated Progress Chart/Schedule _____ Progress Narrative _____ Certified Payrolls (submitted weekly) _____ Safety Exposure Report _____ Updated Submittal \register _____ Progress Photos _____ Subcontractor/Employee Listings	(FOR GOVERNMENT USE ONLY) Retainage: _____% Amt.: $_____ Withholdings: $ _____ Reason: _____ _____ Following items are current: As-Builts _____ Yes _____ No O & M Manuals _____ Yes _____ No 1354 Data _____ Yes _____ No Submittal Register _____Yes _____No

END OF SECTION

SECTION 01035

MODIFICATION PROCEDURES

PART 1 GENERAL

1.1 PROPOSED PROJECT MODIFICATIONS:

Price proposals for proposed modifications shall be submitted in accordance with the requirements of the Contract Clause MODIFICATION PROPOSALS - PRICE BREAKDOWNS. If change order work impacts or delays other unchanged contract work, the costs of such impacts or delays shall be included in the proposals and separately identified. Additional instructions for submitting price proposals can be found in NPSP-415-1-1, INSTRUCTION AND INFORMATION FOR CONTRACTORS, a copy of which will be furnished to the Contractor at the Preconstruction Conference. For information applicable to equipment rates used in contract modifications, refer to 00800 - SPECIAL CLAUSES, clause “EQUIPMENT OWNERSHIP AND OPERATING EXPENSE SCHEDULE”.

PART 2 PRODUCTS (NOT USED)

PART 3 EXECUTION (NOT USED)

END OF SECTION

SECTION 01061

ENVIRONMENTAL PROTECTION

PART 1 GENERAL

1.1 SCOPE

This Section covers prevention of environmental pollution and damage as the result of construction operations under this contract. For the purpose of this specification, environmental pollution, and damage is defined as the presence of chemical, physical, or biological elements or agents which adversely affect human health or welfare; unfavorably alter ecological balances of importance to human life; affect other species of importance to man; or degrade the utility of the environment for esthetic, cultural, and/or historical purposes. The control of environment pollution and damage requires consideration of air, water, and land, and includes management of visual esthetics, noise, and solid waste, as well as other pollutants.

1.2 QUALITY CONTROL

The Contractor shall establish and maintain quality control for environmental protection of all items set forth herein. The Contractor shall record any problems in complying with laws, regulations, and ordinances, and corrective action taken.

1.2.1 Subcontractors

Assurance of compliance with this Section by subcontractors will be the responsibility of the Contractor.

1.3 NOTIFICATION

When the Contracting Officer notifies the Contractor in writing of any observed noncompliance with Federal, state, or local laws, regulations, or permits, the Contractor shall, after receipt of such notice, inform the Contracting Officer of proposed corrective action and take such action as may be approved. If the Contractor fails to comply promptly, the Contracting Officer may issue an order stopping all or part of the work until satisfactory corrective action has been taken. No time extensions will be granted or costs or damage allowed to the Contractor for any such suspension.

1.4 PROTECTION OF ENVIRONMENTAL RESOURCES

The environmental resources within the project boundaries and those affected outside the limits of permanent work under this contract shall be protected during the entire period of this contract. The Contractor shall confine his activities to areas defined by the drawings and specifications. Environmental protection shall be as stated in the following subparagraphs:

1.4.1 Protection of Land Resources

The Contractor shall not remove, cut, deface, injure, or destroy land resources including trees, shrubs, vines, grasses, topsoil, and land forms without special permission from the Contracting Officer except as otherwise specified or indicated. See Paragraph 1.6, Protection of Trees During Excavation, for additional requirements relating to protection of trees during excavation in the vicinity of a tree.

1.4.2 Disposal of Garbage

Garbage shall be placed in containers which are emptied on a regular schedule. All handling and disposal shall be conducted to prevent contamination.

1.4.3 Refuse Disposal and Cleanup

Refuse shall be defined as debris other than such organic materials as brush or tree stumps.

1.4.3.1 Refuse Disposal

The cost of refuse disposal, such as transportation, handling, dumping fees as applicable, and similar cost, shall be included in the contract price. Refuse shall be disposed of off site, in accordance with all local, state, and Federal rules and regulations, at the Contractor's expense.

1.4.3.2 Fire Hazard

Cloths, cotton waste, and other combustible materials that might constitute a fire hazard shall be placed in closed metal containers and placed outside or destroyed at the end of each day.

1.4.4 Restrictions

The Contractor will not be permitted to deposit refuse in existing garbage cans or refuse dumpsters. Cleaners shall not be poured, drained, or washed into plumbing fixtures or sanitary or storm sewers. Debris, dirt, dust, and stains attributable to or resulting from the work effort shall be removed, cleaned, or effaced by the Contractor to the satisfaction of the Contracting Officer prior to acceptance of the job. Refuse shall not be burned. Burning of vegetation or tree stumps will not be allowed unless the worksite is in an area approved for burning.

1.4.5 Disposal of Chemical or Hazardous Waste

Chemical or hazardous waste shall be stored in corrosion-resistant containers, removed from the work area, and disposed of in accordance with Federal, state, and local regulations.

1.4.6 Disposal of Discarded Materials

Discarded materials, other than those which can be included in the solid waste category, shall be handled as directed.

1.4.7 Protection of Water Resources

The Contractor shall keep construction activities under surveillance, management, and control to avoid pollution of surface and ground waters.

1.4.8 Particulates

Dust particles, aerosols, and gaseous byproducts from construction activities, processing, and preparation of materials shall be controlled at all times, including weekends, holidays, and hours when work is not in progress. Hydrocarbons and carbon monoxide emissions from equipment shall be controlled to Federal and state allowable limits at all times.

1.5 APPROVED SMOKING AREAS

Contractor shall coordinate with the onsite Government Representative to designate government smoking areas. Appropriate recepticals shall be provided for tobacco butts.

1.6 PROTECTION OF TREES DURING EXCAVATION

Care shall be exercised by the contractor when excavating trenches in the vicinity of trees. Where roots are 2 inches in diameter or greater, the trench shall be excavated by hand and tunneled. When large roots are exposed, they shall be wrapped with a heavy burlap for protection and to prevent drying. Trenches dug by machines adjacent to trees having roots less than 2 inches in diameter shall have the sides hand trimmed making a clean cut of the roots. Trenches having exposed tree roots shall be backfilled within 24 hours unless adequately protected by moist burlap or canvas.

1.7 MAINTENANCE OF POLLUTION CONTROL FACILITIES

The Contractor shall maintain all constructed facilities and portable pollution control devices for the duration of the contract or for that length of time construction activities create the particular pollutant.

1.8 RESTORATION OF LANDSCAPE (VEGETATION - SUCH AS TREES, PLANTS, AND GRASS) DAMAGE

All landscape features (vegetation - such as trees, plants, and grass) damaged or destroyed during Contractor operations outside and within the work areas shall be restored to a condition similar to that which existed prior to construction activities unless otherwise indicated on the drawings or in the specifications. This restoration shall be done at no additional cost to the Government. If the Contractor fails or refuses to repair the damage promptly, the Contracting Officer may have the necessary work performed and charge the cost to the Contractor.

Trees shall be replaced in kind with a minimum 4-inch caliper nursery stock. Shrubs, vines, and ground cover shall be replaced in kind; size to be approved by the Contracting Officer.

All plant material shall meet specifications outlined in ANSI Z60.1 - current publication, "American Standard for Nursery Stock."

Grass areas shall be replaced in kind by sodding or seeding. Sod shall be required in all regularly maintained lawn areas and shall be installed according to American Sod Producers Association Guideline Specifications to Sodding.

Grass seeding shall be installed on a minimum 2-inch topsoil and as recommended by the local county extension service.

END OF SECTION

This page intentionally blank

SECTION 01300

SUBMITTALS

PART 1 GENERAL

1.1 CONTROL AND SCHEDULING OF SUBMITTALS

1.1.1 Submittal Coordination Meeting

After the preconstruction conference and before any submittals are sent to the Contracting Officer's Representative (COR), with the exception of Division 1 submittals, the contractor shall meet with the COR to develop an approved preliminary submittal register, ENG Form 4288. During the meeting all required items will be identified and grouped into three categories:

- Government Approved (GA): Government approval is required for extensions of design, critical materials, variations/deviations, an "or equal" decision, equipment whose compatibility with the entire system must be checked, architectural items such as Color Charts/Patterns/Textures, and other items as designated by the COR. Within the terms of the Contract Clause entitled "Specifications and Drawings for Construction," these submittals will be acted on as "shop drawings."

- For Information Only (FIO): Submittals not requiring Government approval will be for information only. These are items such as Installation Procedures, Certificates of compliance, Samples, Qualifications, etc. Within the terms of the Contract Clause entitled "Specifications and Drawings for Construction," these submittals will not be acted on as "shop drawings."

- Those items that can be visually inspected by the contractor's Quality Control Representative (CQC) on site or are provided to the Government other than with an ENG Form 4025: The items that fall into this category shall remain on the register but shall not be submitted to the COR. For these items, the "Classification" column on the submittal register shall remain blank.

1.1.2 Final Submittal Register

The final submittal register shall be coordinated with the progress schedule and submitted within 40 days of Notice to Proceed. In preparing the final document, adequate time (minimum of 30 days) shall be allowed for review and approval, and possible resubmittal of each item on the register.

1.1.3 Submittal Register Updates

The Contractor's quality control representative shall review the listing at least every 30 days and take appropriate action to maintain an effective system. Copies of updated or corrected listings shall be submitted to the COR at least every 30 days in the quantity specified.

1.2 SUBMITTAL TYPES

Submittals required by the Contract Clauses and other non-technical parts of the contract are not included in this section. These type of submittals shall be added to the register before or during the submittal coordination meeting. Throughout these specifications submittals may be identified with the prefix "SD" (submittal data) followed by a number (category, i.e., data, drawings, reports, etc.). This is for bookkeeping and record sorting in the system:

SD-01 Data

Submittals which provide calculations, descriptions, or documentation regarding the work.

SD-04 Drawings

Submittals which graphically show relationship of various components of the work, schematic diagrams of systems, details of fabrication, layouts of particular elements, connections, and other relational aspects of the work.

SD-06 Instructions

Preprinted material describing installation of a product, system or material, including special notices and material safety data sheets, if any, concerning impedances, hazards, and safety precautions.

SD-07 Schedules

Tabular lists showing location, features, or other pertinent information regarding products, materials, equipment, or components to be used n the work.

SD-08 Statements

A document, required of the contractor, or through the contractor from a subcontractor, supplier, installer, or manufacturer to confirm the quality or orderly progression of a portion of the work by documenting procedures, acceptability of methods or personnel, qualifications, or other quality verifications.

SD-09 Reports

Reports of inspections or tests, including analyses and interpretation of test results. Each report shall be properly identified. Test methods used shall be identified and test results shall be recorded.

SD-13 Certificates

Statement signed by an official authorized to certify on behalf of the manufacturer that a product, system or material meets specified requirements. The statement must be dated after the award of this contract and state the contractor's name and address, project and location, and list specific requirements which are being certified.

SD-14 Samples

Fabricated and/or unfabricated physical examples of materials, products, and/or units of work as complete units or as portions of units.

SD-18 Records

Documentation to record compliance with technical or administrative requirements.

SD-19 Operation and Maintenance Manuals

Data which forms a part of an operation and maintenance manual.

1.3 APPROVED SUBMITTALS

The approval of submittals by the COR shall not be construed as a complete check, but will indicate only that the general method of construction, materials, detailing and other information are satisfactory. Approval will not relieve the Contractor of the responsibility for any error which may exist. The contractor, under the CQC requirements of this contract, is responsible for the dimensions and design of adequate connections, details, and satisfactory construction of all work. After submittals have been approved by the COR, no resubmittal for the purpose of substituting materials or equipment will be given consideration.

1.4 DISAPPROVED SUBMITTALS

The Contractor shall make all corrections required by the COR and promptly furnish a corrected submittal in the format and number of copies specified for the initial submittal. If the contractor considers any correction indicated on the submittals to constitute a change to the contract, written notice, as required under the Contract Clause entitled "Changes," shall be given to the COR.

1.5 PAYMENT

Separate payment will not be made for submittals, and all costs associated therein shall be included in the applicable unit prices or lump sum prices contained in the schedule. Payment will not be made for any material or equipment which does not comply with contract requirements.

PART 2 PRODUCTS (Not Applicable)

PART 3 EXECUTION

3.1 GENERAL

Prior to submittal, all items shall be checked and approved by the contractor's CQC and each item of the submittal shall be stamped, signed, and dated. Each respective transmittal form (ENG Form 4025) shall be signed and dated by the CQC certifying that the accompanying submittal complies with the contract requirements. This procedure applies to all submittals. Submittals shall include items such as: Contractor's, manufacturer's, or fabricator's drawings; descriptive literature including, but not limited to, catalog cuts, diagrams; operating charts or curves; test reports; test cylinders; samples; O&M manuals including parts lists; certifications; warranties and other such required items. Units of weights and measures used on all submittals shall be the same as the contract drawings. Each submittal shall be complete and in sufficient detail to allow ready determination of compliance with contract requirements. GA submittals shall be scheduled and made prior to the acquisition of the material or equipment covered thereby. The COR may request submittals in addition to those listed when deemed necessary to adequately describe the work covered in the respective sections. The Contractor shall maintain a complete and up-to-date file of all submittals/items on site for use by both the Contractor and the Government.

3.2 SUBMITTAL REGISTER (ENG Form 4288)

The Contractor shall approve all items listed on the submittal register. The ENG Form 4288 in this Section lists each item of equipment and material for which submittals are required. During the submittal coordination meeting, a preliminary submittal register will be created by annotating this Form 4288. When the final submittal register is submitted for approval, the contractor shall complete the column entitled “Item No.” and all data under “Contractor Schedule Dates” and return five completed copies to the COR for approval. The Contractor shall review the list to ensure its completeness and may expand general category listings to show individual entries for each item. The numbers in column “Item No.” are to be assigned sequentially starting with "1" for each specification section. DO NOT preassign transmittal numbers when preparing the submittal register. When a conflict exists between the submittal register and a submittal requirement in the technical sections, other than those submittals referenced in Paragraph 3.9: Field Test Reports, the approved submittal register shall govern. The preliminary, and then the final approved submittal register, will become the scheduling documents and will be updated monthly and used to control submittals throughout the life of the contract. Names and titles of individuals authorized by the contractor to approve shop drawings shall be submitted to COR with the final 4288 form. Supplier or subcontractors certifications are not acceptable as meeting this requirement.

3.3 SCHEDULING

Submittals covering component items forming a system, or items that are interrelated, shall be coordinated and submitted concurrently. Certifications shall be submitted together with other pertinent information and/or drawings. Additional processing time beyond 30 days, or number of copies, may be shown by the COR on the submittal register attached in the “Remarks” column, or may be added by the COR during the coordination meeting. No delays damages or time extensions will be allowed for time lost due to the Contractor not properly scheduling and providing submittals.

3.4 TRANSMITTAL FORM (ENG Form 4025)

Transmittal Form 4025 (sample at end of this section) shall be used for submitting both GA and FIO submittals in accordance with the instructions on the reverse side of the form. Transmittal numbers shall be assigned sequentially. Original 4025 forms shall be used (do not photo copy) and will be furnished by the COR. These forms shall be filled in completely prior to submittal. Special care shall be exercised to ensure proper listing of the specification paragraph and/or sheet number of the contract drawings pertinent to the data submitted for each item.. Each submittal item shall be listed separately on the form, naming subcontractor, supplier, or manufacturer, applicable specification paragraph number(s), drawing/sheet number, pay item number, and any other information needed to identify the item, define its use, and locate it in the work. One or more 4025 forms may be used per specification section, however, DO NOT include more than one specification section per transmittal.

3.5 CROSS-REFERENCE (ENG FORM 4288/ENG FORM 4025)

To provide a cross-reference between the approved submittal register and transmittal forms, the contractor shall record the "transmittal numbers" assigned when submitting items in column “Transmittal No.” of the ENG FORM 4288. The item numbers in column “Item No.” of submittal register shall correspond to the item numbers on ENG Form 4025.

3.6 SUBMITTAL PROCEDURE

3.6.1 General

Shop drawings with 4025 forms shall be submitted in the number of copies specified in subparagraphs "Government Approved Submittals" and "Information Only Submittals," or as indicated on the submittal register in the “Remarks” column. Submit a complete collated “reviewers copy” with one 4025 form and attachments (not originals). The remaining copies (4 for GA, 2 for FIO) of 4025 forms and attachments shall not be collated. This would not apply to a series of drawings.

3.6.2 Approval of Submittals by the Contractor

Before submittal to the COR, the Contractor shall review and correct shop drawings prepared by subcontractors, suppliers, and itself, for completeness and compliance with plans and specifications. The contractor shall not use red markings for correcting material to be submitted. Red markings are reserved for COR’s use. Approval by the contractor shall be indicated on each shop drawing by an approval stamp containing information as shown in this section. Submittals not conforming to the requirements of this section will be returned to the contractor for correction and resubmittal.

3.6.3 Variations

For submittals which include proposed variations requested by the Contractor, column “h” of ENG Form 4025 shall be checked and the submittal shall be classified as GA, and submitted accordingly. The Contractor shall set forth in writing the justification for any variations and annotate such variations on the transmittal form in the REMARKS block. Variations are not approved unless there is an advantage to the Government. The Government reserves the right to rescind inadvertent approval of submittals containing unnoted variations.

3.6.4 Drawings

Each drawing shall be not more than 28 inches high by 40 inches wide, with a title block in lower right hand corner and a 3 by 4 inch clear area adjacent. The title block shall contain the subcontractor's or fabricator's name, contract number, description of item(s), bid item number, and a revision block. Provide a blank margin of 3/4 inch at bottom, 2 inches at left, and 1/2 inch at top and right. Where drawings are submitted for assemblies of more than one piece of equipment or systems of components dependent on each other for compatible characteristics, complete information shall be submitted on all such related components at the same time. The contractor shall ensure that information is complete and that sequence of drawing submittal is such that all information is available for reviewing each drawing. Drawings for all items and equipment, of special manufacture or fabrication, shall consist of complete assembly and detail drawings. All revisions after initial submittal shall be shown by number, date, and subject in revision block.

3.6.4.1 Submittals Containing Drawings Larger than 11” by 17”

For GA submittals containing drawings larger that 11" by 17", one reproducible and one blue line copy will be required to be submitted with five copies of the Form 4025. The marked-up reproducible (and/or any review comments contained on the 8.5" by 11" page-size comment sheet(s) at the Government's option) will be returned to the Contractor upon review. Three copies of blue line drawings (generated from the reviewed reproducible) will be provided to the Government within 10 days of Contractor's receipt of the reviewed reproducible. The Contractor shall not incorporate approved work into the project until the Government has received the three blue line copies. The Contractor shall use the marked-up reproducible to make any additional copies as needed.

3.6.5 Printed Material

All requirements for shop drawings shall apply to catalog cuts, illustrations, printed specifications, or other data submitted, except that the 3 inch by 4 inch clear area adjacent to the title block is not mandatory. Inapplicable portions shall be marked out and applicable items such as model numbers, sizes, and accessories shall be indicated by arrow or highlighted.

3.7 SAMPLES REQUIRING LABORATORY ANALYSIS

See SECTION: 01451 - CONTRACTOR QUALITY CONTROL for procedures and address for samples requiring Government testing.

3.8 SAMPLES REQUIRING VISUAL INSPECTION

Samples requiring only physical inspection for appearance and suitability shall be coordinated with the on-site Government quality assurance representative (QAR).

3.9 FIELD TEST REPORTS

Routine tests such as soil density, concrete deliveries, repetitive pressure testing shall be delivered to the QAR with the daily Quality Control reports. See SECTION: 01451 - CONTRACTOR QUALITY CONTROL.

3.10 CONTROL OF SUBMITTALS

The Contractor shall carefully control his procurement operations to ensure that each individual submittal is made on or before the Contractor scheduled submittal date shown on the approved "Submittal Register."

3.11 GOVERNMENT APPROVED SUBMITTALS (GA)

The Contractor shall submit 5 copies of GA submittals with 5 corresponding 4025 forms. Upon completion of GA submittal review, they will be marked with an action code, dated, and returned to the contractor. See “Drawings” above for special instructions if drawings larger than 11 inches by 17 inches are used.

3.11.1 Processing of GA Submittals

Submittals will be reviewed and processed as follows:

a. Approved as Submitted (Action Code "A"): Shop drawings which can be approved without correction will be stamped "Approved" and two copies will be returned to the contractor. No resubmittal required.

b. Approved Except as Noted (Action Code "B"): Shop drawings which have only minor discrepancies will be annotated in red to indicate necessary corrections. Marked material will be stamped "Approved Except as Noted" and two copies returned to the contractor for correction. No resubmittal required.

c. Approved Except as Noted (Action Code "C"): Shop drawings which are incomplete or require more than minor corrections will be annotated in red to indicate necessary corrections. Marked material will be stamped "Approved Except as Noted - Resubmission Required" and two copies returned to the contractor for correction. Resubmittal of only those items needing correction required.

d. Disapproved (Action Code "E"): Shop drawings which are fundamentally in error, cover wrong equipment or construction, or require extensive corrections, will be returned to the contractor stamped "Disapproved." An explanation will be furnished on the submitted material or on ENG Form 4025 indicating reason for disapproval. Complete resubmittal required.

e. Resubmittal will not be required for shop drawings stamped "A" or "B" unless subsequent changes are made by Contractor or a contract modification. For shop drawings stamped "C" or "E," contractor shall make corrections required, note any changes by dating the revisions to correspond with the change request date, and promptly resubmit the corrected material. Resubmittals shall be associated with the “parent” by use of sequential alpha characters (for example, resubmittal of transmittal 8 will be 8A, 8B, etc). Government costs incurred after the first resubmittal may be charged to the contractor.

3.12 INFORMATION ONLY SUBMITTALS (FIO)

The Contractor shall submit three copies of data and four copies of ENG Form 4025. FIO submittals will not be returned. Government approval is not required on FIO submittals. These submittals will be used for information purposes. The Government reserves the right to require the Contractor to resubmit any item found not to comply with the Contract. This does not relieve the Contractor from the obligation to furnish material conforming to the plans and specifications and will not prevent the COR from requiring removal and replacement if nonconforming material is incorporated in the work. This does not relieve the Contractor of the requirement to furnish samples for testing by the Government laboratory or check testing by the Government in those instances where the technical specifications so prescribe.

3.12.1 Processing of FIO Submittals

FIO submittals shall be submitted prior to delivery of the material or equipment to the job site. ENG Form 4025 shall be marked with the words "Contractor approved - information copy only" in the REMARKS block of the form. Submittals will be monitored and spot checks made. When such checks indicate noncompliance, the Contractor will be notified by the same method used for GA submittals. Resubmittal of nonconforming FIO submittals shall be reclassified GA and shall be in five copies.

3.13 CONTRACTOR APPROVAL STAMP

The stamp used by the Contractor on the submittal data to certify that the submittal meets contract requirements shall be similar to the following:

CONTRACTOR:_____
CONTRACT NUMBER _____
TRANSMITTAL NUMBER _____
ITEM NUMBER _____
SPECIFICATION SECTION _____
PARAGRAPH NUMBER _____
_____ APPROVED AS SUBMITTED
_____ APPROVED WITH CORRECTIONS AS NOTED

SIGNATURE: _____
TITLE: _____
DATE_____

CONTRACTORS REVIEW STAMP

MAXIMUM SIZE:

3 INCHES BY 3 INCHES

TRANSMITTAL OF SHOP DRAWINGS, EQUIPMENT DATA, MATERIAL SAMPLES, OR MANUFACTURER'S CERTIFICATES OF COMPLIANCE *(Read instructions on the reverse side prior to initiating this form)*	DATE	TRANSMITTAL NO.

SECTION I - REQUEST FOR APPROVAL OF THE FOLLOWING ITEMS *(This section will be initiated by the contractor)*

TO:	FROM:	CONTRACT NO.	CHECK ONE: ☐ THIS IS A NEW TRANSMITTAL ☐ THIS IS A RESUBMITTAL OF TRANSMITTAL _____
SPECIFICATION SEC. NO. *(Cover only one section with each transmittal)*	PROJECT TITLE AND LOCATION		CHECK ONE: THIS TRANSMITTAL IS FOR ☐ FIO ☐ GOV'T. APPROVAL

ITEM NO. *a.*	DESCRIPTION OF ITEM SUBMITTED *(Type size, model number/etc.)* *b.*	MFG OR CONTR. CAT., CURVE DRAWING OR BROCHURE NO. *(See instruction no. 8)* *c.*	NO. OF COPIES *d.*	CONTRACT REFERENCE DOCUMENT: SPEC. PARA. NO. *e.*	CONTRACT REFERENCE DOCUMENT: DRAWING SHEET NO. *f.*	FOR CONTRACTOR USE CODE *g.*	VARIATION *(See instruction No. 8)* *h.*	FOR CE USE CODE *i.*

REMARKS

I certify that the above submitted items have been reviewed in detail and are correct and in strict conformance with the contract drawings and specifications except as otherwise stated.

_____
NAME AND SIGNATURE OF CONTRACTOR

SECTION II - APPROVAL ACTION

ENCLOSURES RETURNED *(List by Item No.)*	NAME, TITLE AND SIGNATURE OF APPROVING AUTHORITY	DATE

ENG FORM 4025-R, MAR 95 *(ER 415-1-10)* EDITION OF SEP 93 IS OBSOLETE. SHEET ___ OF ___ (Reverse, CEMP-CE)

INSTRUCTIONS

1. Section I will be initiated by the Contractor in the required number of copies.

2. Each transmittal shall be numbered consecutively in the space provided for "Transmittal No.". This number, in addition to the contract number, will form a serial number for identifying each submittal. For new submittals or resubmittals mark the appropriate box; on resubmittals, insert transmittal number of last submission as well as the new submittal number.

3. The "Item No." will be the same "Item No." as indicated on ENG FORM 4288-R for each entry on this form.

4. Submittals requiring expeditious handling will be submitted on a separate form.

5. Separate transmittal form will be used for submittals under separate sections of the specifications.

6. A check shall be placed in the "Variation" column when a submittal is not in accordance with the plans and specifications--also, a written statement to that effect shall be included in the space provided for "Remarks".

7. Form is self-transmittal, letter of transmittal is not required.

8. When a sample of material or Manufacturer's Certificate of Compliance is transmitted, indicate "Sample" or "Certificate" in column c, Section I.

9. U.S. Army Corps of Engineers approving authority will assign action codes as indicated below in space provided in Section I, column i to each item submitted. In addition they will ensure enclosures are indicated and attached to the form prior to return to the contractor. The Contractor will assign action codes as indicated below in Section I, column g, to each item submitted.

THE FOLLOWING ACTION CODES ARE GIVEN TO ITEMS SUBMITTED

A	--	Approved as submitted.	E	--	Disapproved (See attached).
B	--	Approved, except as noted on drawings.	F	--	Receipt acknowledged.
C	--	Approved, except as noted on drawings. Refer to attached sheet resubmission required.	FX	--	Receipt acknowledged, does not comply as noted with contract requirements.
D	--	Will be returned by separate correspondence.	G	--	Other *(Specify)*

10. Approval of items does not relieve the contractor from complying with all the requirements of the contract plans and specifications.

(Reverse of ENG Form 4025-R)

END OF SECTION

ATTACHMENT A

SUBMITTAL REGISTER

ENG FORM 4288

SUBMITTAL REGISTER

(ER 415-1-10)

CONTRACT NUMBER

TITLE AND LOCATION: (98044) C-17 Squadron Operations/AMU Facility, McChord AFB, WA

CONTRACTOR

SPECIFICATION SECTION: 01001, 01300, 01320

				TYPE OF SUBMITTAL									CLASSIFICATION			CONTRACTOR SCHEDULE DATES			CONTRACTOR ACTION			GOVERNMENT ACTION		
TRANSMITTAL NO	ITEM NO	SPECIFICATION PARAGRAPH NUMBER	DESCRIPTION OF ITEM SUBMITTED	DATA	DRAWINGS	INSTRUCTIONS	SCHEDULES	STATEMENTS	REPORTS	CERTIFICATES	SAMPLES	RECORDS	INFORMATION ONLY	GOVERNMENT APPROVED	REVIEWER	SUBMIT	APPROVAL NEEDED BY	MATERIAL NEEDED BY	CODE	DATE	SUBMIT TO GOVERNMENT	CODE	DATE	REMARKS
a.	b.	c.	d.	e.	f.	g.	h.	i.	j.	k.	l.	m.	n.	o.	p.	q.	r.	s.	t.	u.	v.	w.	x.	y.
			SECTION 01001																					
		1.6.1	Audio-Video Recordings	X										X										
		1.8	Color Boards	X										X										
			SECTION 01300																					
		1.1	Submittal Register	X			X							X										
			SECTION 01320																					
		1.1	Preliminary Project Schedule				X							X										
		1.1	Initial Project Schedule				X							X										
		1.1	Periodic Schedule Updates				X						X											

SUBMITTAL REGISTER

(ER 415-1-10)

CONTRACT NUMBER

TITLE AND LOCATION: (98044) C-17 Squadron Operations AMU Facility, McChord AFB

CONTRACTOR

SPECIFICATION SECTION: 01451, 01501, 01701

				TYPE OF SUBMITTAL									CLASSIFICATION			CONTRACTOR SCHEDULE DATES			CONTRACTOR ACTION			GOVERNMENT ACTION		
TRANSMITTAL NO	ITEM NO	SPECIFICATION PARAGRAPH NUMBER	DESCRIPTION OF ITEM SUBMITTED	DATA	DRAWINGS	INSTRUCTIONS	SCHEDULES	STATEMENTS	REPORTS	CERTIFICATES	SAMPLES	RECORDS	INFORMATION ONLY	GOVERNMENT APPROVED	REVIEWER	SUBMIT	APPROVAL NEEDED BY	MATERIAL NEEDED BY	CODE	DATE	SUBMIT TO GOVERNMENT	CODE	DATE	REMARKS
a.	b.	c.	d.	e.	f.	g.	h.	i.	j.	k.	l.	m.	n.	o.	p.	q.	r.	s.	t.	u.	v.	w.	x.	y.
			SECTION 01451																					
		3.2	Quality Control Plan	X										X										
		3.7.2.1	Laboratory Certificate of								X			X										
			Accreditation																					
			SECTION 01501																					
		1.3.3	Drawings of Temporary Power		X									X										
			Connections																					
		1.1	Drawings of Elevated Work Area		X								X											
			SECTION 01701																					
		3.2	Preliminary O&M Manual and Data	X										X										

SUBMITTAL REGISTER

(ER 415-1-10)

CONTRACT NUMBER

TITLE AND LOCATION: (98044) C-17 Squadron Operations/AMU Facility, McChord AFB, WA

CONTRACTOR

SPECIFICATION SECTION: 01703, 01704, 01705

				TYPE OF SUBMITTAL									CLASSIFICATION			CONTRACTOR SCHEDULE DATES			CONTRACTOR ACTION			GOVERNMENT ACTION		
TRANSMITTAL NO	ITEM NO	SPECIFICATION PARAGRAPH NUMBER	DESCRIPTION OF ITEM SUBMITTED	DATA	DRAWINGS	INSTRUCTIONS	SCHEDULES	STATEMENTS	REPORTS	CERTIFICATES	SAMPLES	RECORDS	INFORMATION ONLY	GOVERNMENT APPROVED	REVIEWER	SUBMIT	APPROVAL NEEDED BY	MATERIAL NEEDED BY	CODE	DATE	SUBMIT TO GOVERNMENT	CODE	DATE	REMARKS
a.	b.	c.	d.	e.	f.	g.	h.	i.	j.	k.	l.	m.	n.	o.	p.	q.	r.	s.	t.	u.	v.	w.	x.	y.
			SECTION 01702																					
		3.1.2	As-Built Field Data	X	X									X										
		3.2.2	As-Built AutoCAD Format		X									X										
			Drawings																					
			SECTION 01704																					
		1.2	Form 1354 Check List	X										X										
			SECTION 01705																					
		3.1	Equipment-In-Place List	X										X										

ENG FORM 4288, MAY 91

EDITION OF AUG 89 IS OBSOLETE

This page intentionally blank

SUBMITTAL REGISTER
(ER 415 1-10)

CONTRACT NO.

TITLE AND LOCATION
C-17 Squad Ops/AMU Facility, McChord AFB, WA

CONTRACTOR

SPECIFICATION SECTION
02050

ACTIVITY NO. a.	TRANS-MITTAL NO. b.	ITEM NO c.	SPECIFICATION PARAGRAPH NUMBER d.	DESCRIPTION OF ITEM SUBMITTED e.	TYPE OF SUBMITTAL: DATA f.	DRAWINGS g.	INSTRUCTIONS h.	SCHEDULES i.	STATEMENTS j.	REPORTS k.	CERTIFICATES l.	SAMPLES m.	RECORDS n.	O&M MANUALS o.	CLASSIFICATION: INFORMATION ONLY p.	GOVERNMENT APPROVED q.	REVIEWER r.	CONTRACTOR SCHEDULE DATES: SUBMIT s.	APPROVAL NEEDED BY t.	MATERIAL NEEDED BY u.	CONTRACTOR ACTION: CODE v.	DATE w.	SUBMIT TO GOVERN-MENT x.	GOVERNMENT ACTION: CODE y.	DATE z.	REMARKS aa.
			1.3	Work Plan					X							X										
			1.3	Recycled Asphalt Report					X							X										

SUBMITTAL REGISTER
(ER 415 1-10)

CONTRACT NO.

TITLE AND LOCATION
C-17 Squad Ops/AMU Facility, McChord AFB, WA

CONTRACTOR

SPECIFICATION SECTION
02210

ACTIVITY NO. a.	TRANS-MITTAL NO. b.	ITEM NO c.	SPECIFICATION PARAGRAPH NUMBER d.	DESCRIPTION OF ITEM SUBMITTED e.	TYPE OF SUBMITTAL: DATA f.	DRAWINGS g.	INSTRUCTIONS h.	SCHEDULES i.	STATEMENTS j.	REPORTS k.	CERTIFICATES l.	SAMPLES m.	RECORDS n.	O&M MANUALS o.	CLASSIFICATION: INFORMATION ONLY p.	GOVERNMENT APPROVED q.	REVIEWER r.	CONTRACTOR SCHEDULE DATES: SUBMIT s.	APPROVAL NEEDED BY t.	MATERIAL NEEDED BY u.	CONTRACTOR ACTION: CODE v.	DATE w.	SUBMIT TO GOVERN-MENT x.	GOVERNMENT ACTION: CODE y.	DATE z.	REMARKS aa.
			1.3	Rock for Slope Protection						X						X										
			1.3	Borrow Material						X						X										
			1.3	Field In-place Density Tests						X						X										

SUBMITTAL REGISTER
(ER 415 1-10)

CONTRACT NO.

TITLE AND LOCATION
C-17 Squad Ops/AMU Facility, McChord AFB, WA

CONTRACTOR

SPECIFICATION SECTION
02221

ACTIVITY NO. a.	TRANS-MITTAL NO. b.	ITEM NO c.	SPECIFICATION PARAGRAPH NUMBER d.	DESCRIPTION OF ITEM SUBMITTED e.	TYPE OF SUBMITTAL: DATA f.	DRAWINGS g.	INSTRUCTIONS h.	SCHEDULES i.	STATEMENTS j.	REPORTS k.	CERTIFICATES l.	SAMPLES m.	RECORDS n.	O&M MANUALS o.	CLASSIFICATION: INFORMATION ONLY p.	GOVERNMENT APPROVED q.	REVIEWER r.	CONTRACTOR SCHEDULE DATES: SUBMIT s.	APPROVAL NEEDED BY t.	MATERIAL NEEDED BY u.	CONTRACTOR ACTION: CODE v.	DATE w.	SUBMIT TO GOVERN-MENT x.	GOVERNMENT ACTION: CODE y.	DATE z.	REMARKS aa.
			1.3	Field Density Tests						X						X										
			1.3	Testing of Backfill Materials						X						X										
			1.3	Soil Treatment Agent						X						X										

SUBMITTAL REGISTER
(ER 415 1-10)

CONTRACT NO.

TITLE AND LOCATION
C-17 Squad Ops/AMU Facility, McChord AFB, WA

CONTRACTOR

SPECIFICATION SECTION
02222

ACTIVITY NO. a.	TRANS-MITTAL NO. b.	ITEM NO c.	SPECIFICATION PARAGRAPH NUMBER d.	DESCRIPTION OF ITEM SUBMITTED e.	TYPE OF SUBMITTAL: DATA f.	DRAWINGS g.	INSTRUCTIONS h.	SCHEDULES i.	STATEMENTS j.	REPORTS k.	CERTIFICATES l.	SAMPLES m.	RECORDS n.	O&M MANUALS o.	CLASSIFICATION: INFORMATION ONLY p.	GOVERNMENT APPROVED q.	REVIEWER r.	CONTRACTOR SCHEDULE DATES: SUBMIT s.	APPROVAL NEEDED BY t.	MATERIAL NEEDED BY u.	CONTRACTOR ACTION: CODE v.	DATE w.	SUBMIT TO GOVERN-MENT x.	GOVERNMENT ACTION: CODE y.	DATE z.	REMARKS aa.
			3.4.3	Field Density Tests						X						X										
			3.4.2	Testing of Backfill Materials						X						X										

SUBMITTAL REGISTER
(ER 415 1-10)

CONTRACT NO.

TITLE AND LOCATION
C-17 Squad Ops/AMU Facility, McChord AFB, WA

CONTRACTOR

SPECIFICATION SECTION
02225

ACTIVITY NO. a.	TRANS-MITTAL NO. b.	ITEM NO c.	SPECIFICATION PARAGRAPH NUMBER d.	DESCRIPTION OF ITEM SUBMITTED e.	TYPE OF SUBMITTAL: DATA f.	DRAWINGS g.	INSTRUCTIONS h.	SCHEDULES i.	STATEMENTS j.	REPORTS k.	CERTIFICATES l.	SAMPLES m.	RECORDS n.	O&M MANUALS o.	CLASSIFICATION: INFORMATION ONLY p.	GOVERNMENT APPROVED q.	REVIEWER r.	CONTRACTOR SCHEDULE DATES: SUBMIT s.	APPROVAL NEEDED BY t.	MATERIAL NEEDED BY u.	CONTRACTOR ACTION: CODE v.	DATE w.	SUBMIT TO GOVERN-MENT x.	GOVERNMENT ACTION: CODE y.	DATE z.	REMARKS aa.
			1.3	Earthwork					X							X										
			3.7	Testing						X						X										

SUBMITTAL REGISTER
(ER 415 1-10)

CONTRACT NO.

TITLE AND LOCATION
C-17 Squad Ops/AMU Facility, McChord AFB, WA

CONTRACTOR

SPECIFICATION SECTION
02241

ACTIVITY NO. a.	TRANS-MITTAL NO. b.	ITEM NO c.	SPECIFICATION PARAGRAPH NUMBER d.	DESCRIPTION OF ITEM SUBMITTED e.	TYPE OF SUBMITTAL: DATA f.	DRAWINGS g.	INSTRUCTIONS h.	SCHEDULES i.	STATEMENTS j.	REPORTS k.	CERTIFICATES l.	SAMPLES m.	RECORDS n.	O&M MANUALS o.	CLASSIFICATION: INFORMATION ONLY p.	GOVERNMENT APPROVED q.	REVIEWER r.	CONTRACTOR SCHEDULE DATES: SUBMIT s.	APPROVAL NEEDED BY t.	MATERIAL NEEDED BY u.	CONTRACTOR ACTION: CODE v.	DATE w.	SUBMIT TO GOVERN-MENT x.	GOVERNMENT ACTION: CODE y.	DATE z.	REMARKS aa.
			1.8	Sampling and Testing						X						X										
			3.4.1	Field Density						X						X										

SUBMITTAL REGISTER
(ER 415 1-10)

CONTRACT NO.

TITLE AND LOCATION
C-17 Squad Ops/AMU Facility, McChord AFB, WA

CONTRACTOR

SPECIFICATION SECTION
02511

ACTIVITY NO. a.	TRANS-MITTAL NO. b.	ITEM NO c.	SPECIFICATION PARAGRAPH NUMBER d.	DESCRIPTION OF ITEM SUBMITTED e.	TYPE OF SUBMITTAL: DATA f.	DRAWINGS g.	INSTRUCTIONS h.	SCHEDULES i.	STATEMENTS j.	REPORTS k.	CERTIFICATES l.	SAMPLES m.	RECORDS n.	O&M MANUALS o.	CLASSIFICATION: INFORMATION ONLY p.	GOVERNMENT APPROVED q.	REVIEWER r.	CONTRACTOR SCHEDULE DATES: SUBMIT s.	APPROVAL NEEDED BY t.	MATERIAL NEEDED BY u.	CONTRACTOR ACTION: CODE v.	DATE w.	SUBMIT TO GOVERN-MENT x.	GOVERNMENT ACTION: CODE y.	DATE z.	REMARKS aa.
			1.2	Test Reports						X						X										
			1.2	Certificates of Compliance							X					X										
			1.2	Records									X		X											

SUBMITTAL REGISTER
(ER 415 1-10)

CONTRACT NO.

TITLE AND LOCATION
C-17 Squad Ops/AMU Facility, McChord AFB, WA

CONTRACTOR

SPECIFICATION SECTION
02551

ACTIVITY NO. a.	TRANS-MITTAL NO. b.	ITEM NO c.	SPECIFICATION PARAGRAPH NUMBER d.	DESCRIPTION OF ITEM SUBMITTED e.	TYPE OF SUBMITTAL: DATA f.	DRAWINGS g.	INSTRUCTIONS h.	SCHEDULES i.	STATEMENTS j.	REPORTS k.	CERTIFICATES l.	SAMPLES m.	RECORDS n.	O&M MANUALS o.	CLASSIFICATION: INFORMATION ONLY p.	GOVERNMENT APPROVED q.	REVIEWER r.	CONTRACTOR SCHEDULE DATES: SUBMIT s.	APPROVAL NEEDED BY t.	MATERIAL NEEDED BY u.	CONTRACTOR ACTION: CODE v.	DATE w.	SUBMIT TO GOVERN-MENT x.	GOVERNMENT ACTION: CODE y.	DATE z.	REMARKS aa.
			1.2	Tests, Preproduction						X						X										
			1.2	Tests, Field						X						X										

SUBMITTAL REGISTER
(ER 415 1-10)

CONTRACT NO.

TITLE AND LOCATION
C-17 Squad Ops/AMU Facility, McChord AFB, WA

CONTRACTOR

SPECIFICATION SECTION
02558

ACTIVITY NO. a.	TRANS-MITTAL NO. b.	ITEM NO c.	SPECIFICATION PARAGRAPH NUMBER d.	DESCRIPTION OF ITEM SUBMITTED e.	TYPE OF SUBMITTAL: DATA f.	DRAWINGS g.	INSTRUCTIONS h.	SCHEDULES i.	STATEMENTS j.	REPORTS k.	CERTIFICATES l.	SAMPLES m.	RECORDS n.	O&M MANUALS o.	CLASSIFICATION: INFORMATION ONLY p.	GOVERNMENT APPROVED q.	REVIEWER r.	CONTRACTOR SCHEDULE DATES: SUBMIT s.	APPROVAL NEEDED BY t.	MATERIAL NEEDED BY u.	CONTRACTOR ACTION: CODE v.	DATE w.	SUBMIT TO GOVERN-MENT x.	GOVERNMENT ACTION: CODE y.	DATE z.	REMARKS aa.
			1.2	Tests						X					X											

SUBMITTAL REGISTER
(ER 415 1-10)

CONTRACT NO.

TITLE AND LOCATION
C-17 Squad Ops/AMU Facility, McChord AFB, WA

CONTRACTOR

SPECIFICATION SECTION
02580

ACTIVITY NO. a.	TRANS-MITTAL NO. b.	ITEM NO c.	SPECIFICATION PARAGRAPH NUMBER d.	DESCRIPTION OF ITEM SUBMITTED e.	TYPE OF SUBMITTAL: DATA f.	DRAWINGS g.	INSTRUCTIONS h.	SCHEDULES i.	STATEMENTS j.	REPORTS k.	CERTIFICATES l.	SAMPLES m.	RECORDS n.	O&M MANUALS o.	CLASSIFICATION: INFORMATION ONLY p.	GOVERNMENT APPROVED q.	REVIEWER r.	CONTRACTOR SCHEDULE DATES: SUBMIT s.	APPROVAL NEEDED BY t.	MATERIAL NEEDED BY u.	CONTRACTOR ACTION: CODE v.	DATE w.	SUBMIT TO GOVERN-MENT x.	GOVERNMENT ACTION: CODE y.	DATE z.	REMARKS aa.
			1.2	Equipment Lists	X											X										
			1.2	Mixing, Thinning and Application			X								X											
			1.2	Material Tests						X						X										

SUBMITTAL REGISTER
(ER 415 1-10)

CONTRACT NO.

TITLE AND LOCATION
C-17 Squad Ops/AMU Facility, McChord AFB, WA

CONTRACTOR

SPECIFICATION SECTION
02660

ACTIVITY NO. a.	TRANS-MITTAL NO. b.	ITEM NO c.	SPECIFICATION PARAGRAPH NUMBER d.	DESCRIPTION OF ITEM SUBMITTED e.	TYPE OF SUBMITTAL: DATA f.	DRAWINGS g.	INSTRUCTIONS h.	SCHEDULES i.	STATEMENTS j.	REPORTS k.	CERTIFICATES l.	SAMPLES m.	RECORDS n.	O&M MANUALS o.	CLASSIFICATION: INFORMATION ONLY p.	GOVERNMENT APPROVED q.	REVIEWER r.	CONTRACTOR SCHEDULE DATES: SUBMIT s.	APPROVAL NEEDED BY t.	MATERIAL NEEDED BY u.	CONTRACTOR ACTION: CODE v.	DATE w.	SUBMIT TO GOVERN-MENT x.	GOVERNMENT ACTION: CODE y.	DATE z.	REMARKS aa.
			3.1	Installation			X								X											
			1.3	Waste Water Disposal Method					X						X											
			1.3	Satisfactory Installation					X						X											
			1.3	Bacteriological Disinfection						X					X											
			1.3	Manufacturer's Representative							X					X										

SUBMITTAL REGISTER
(ER 415 1-10)

CONTRACT NO.

TITLE AND LOCATION
C-17 Squad Ops/AMU Facility, McChord AFB, WA

CONTRACTOR

SPECIFICATION SECTION
02698

ACTIVITY NO. a.	TRANS-MITTAL NO. b.	ITEM NO c.	SPECIFICATION PARAGRAPH NUMBER d.	DESCRIPTION OF ITEM SUBMITTED e.	TYPE OF SUBMITTAL: DATA f.	DRAWINGS g.	INSTRUCTIONS h.	SCHEDULES i.	STATEMENTS j.	REPORTS k.	CERTIFICATES l.	SAMPLES m.	RECORDS n.	O&M MANUALS o.	CLASSIFICATION: INFORMATION ONLY p.	GOVERNMENT APPROVED q.	REVIEWER r.	CONTRACTOR SCHEDULE DATES: SUBMIT s.	APPROVAL NEEDED BY t.	MATERIAL NEEDED BY u.	CONTRACTOR ACTION: CODE v.	DATE w.	SUBMIT TO GOVERN-MENT x.	GOVERNMENT ACTION: CODE y.	DATE z.	REMARKS aa.
			1.3	Distribution System	X										X											
			1.3	Distribution System							X				X											
			1.3	Welding Procedures and Operators							X				X											
			1.3	Distribution System										X	X											

SUBMITTAL REGISTER
(ER 415 1-10)

CONTRACT NO.

TITLE AND LOCATION
C-17 Squad Ops/AMU Facility, McChord AFB, WA

CONTRACTOR

SPECIFICATION SECTION
02720

ACTIVITY NO. a.	TRANS-MITTAL NO. b.	ITEM NO c.	SPECIFICATION PARAGRAPH NUMBER d.	DESCRIPTION OF ITEM SUBMITTED e.	TYPE OF SUBMITTAL: DATA f.	DRAWINGS g.	INSTRUCTIONS h.	SCHEDULES i.	STATEMENTS j.	REPORTS k.	CERTIFICATES l.	SAMPLES m.	RECORDS n.	O&M MANUALS o.	CLASSIFICATION: INFORMATION ONLY p.	GOVERNMENT APPROVED q.	REVIEWER r.	CONTRACTOR SCHEDULE DATES: SUBMIT s.	APPROVAL NEEDED BY t.	MATERIAL NEEDED BY u.	CONTRACTOR ACTION: CODE v.	DATE w.	SUBMIT TO GOVERN-MENT x.	GOVERNMENT ACTION: CODE y.	DATE z.	REMARKS aa.
			1.2	Installation Procedures			X									X										
			1.2	Certificates of Compliance							X				X											

SUBMITTAL REGISTER
(ER 415 1-10)

CONTRACT NO.

TITLE AND LOCATION
C-17 Squad Ops/AMU Facility, McChord AFB, WA

CONTRACTOR

SPECIFICATION SECTION
02730

ACTIVITY NO. a.	TRANS-MITTAL NO. b.	ITEM NO c.	SPECIFICATION PARAGRAPH NUMBER d.	DESCRIPTION OF ITEM SUBMITTED e.	TYPE OF SUBMITTAL: DATA f.	DRAWINGS g.	INSTRUCTIONS h.	SCHEDULES i.	STATEMENTS j.	REPORTS k.	CERTIFICATES l.	SAMPLES m.	RECORDS n.	O&M MANUALS o.	CLASSIFICATION: INFORMATION ONLY p.	GOVERNMENT APPROVED q.	REVIEWER r.	CONTRACTOR SCHEDULE DATES: SUBMIT s.	APPROVAL NEEDED BY t.	MATERIAL NEEDED BY u.	CONTRACTOR ACTION: CODE v.	DATE w.	SUBMIT TO GOVERN-MENT x.	GOVERNMENT ACTION: CODE y.	DATE z.	REMARKS aa.
			1.3	Portland Cement							X				X											

SUBMITTAL REGISTER
(ER 415 1-10)

CONTRACT NO.

TITLE AND LOCATION
C-17 Squad Ops/AMU Facility, McChord AFB, WA

CONTRACTOR

SPECIFICATION SECTION
02811

ACTIVITY NO. a.	TRANS-MITTAL NO. b.	ITEM NO c.	SPECIFICATION PARAGRAPH NUMBER d.	DESCRIPTION OF ITEM SUBMITTED e.	TYPE OF SUBMITTAL: DATA f.	DRAWINGS g.	INSTRUCTIONS h.	SCHEDULES i.	STATEMENTS j.	REPORTS k.	CERTIFICATES l.	SAMPLES m.	RECORDS n.	O&M MANUALS o.	CLASSIFICATION: INFORMATION ONLY p.	GOVERNMENT APPROVED q.	REVIEWER r.	CONTRACTOR SCHEDULE DATES: SUBMIT s.	APPROVAL NEEDED BY t.	MATERIAL NEEDED BY u.	CONTRACTOR ACTION: CODE v.	DATE w.	SUBMIT TO GOVERN-MENT x.	GOVERNMENT ACTION: CODE y.	DATE z.	REMARKS aa.
			1.3	Framed Instructions	X											X										
			1.3	Field Training Data	X											X										
			1.3	Spare Parts	X											X										
			1.3	Sprinkler System		X										X										
			1.3	Sprinkler System			X									X										
			3.2	Field Tests						X						X										
			1.3	Sprinkler System							X					X										
			1.3	Sprinkler System										X		X										

SUBMITTAL REGISTER
(ER 415 1-10)

CONTRACT NO.

TITLE AND LOCATION
C-17 Squad Ops/AMU Facility, McChord AFB, WA

CONTRACTOR

SPECIFICATION SECTION
02935

ACTIVITY NO. a.	TRANS-MITTAL NO. b.	ITEM NO c.	SPECIFICATION PARAGRAPH NUMBER d.	DESCRIPTION OF ITEM SUBMITTED e.	TYPE OF SUBMITTAL: DATA f.	DRAWINGS g.	INSTRUCTIONS h.	SCHEDULES i.	STATEMENTS j.	REPORTS k.	CERTIFICATES l.	SAMPLES m.	RECORDS n.	O&M MANUALS o.	CLASSIFICATION: INFORMATION ONLY p.	GOVERNMENT APPROVED q.	REVIEWER r.	CONTRACTOR SCHEDULE DATES: SUBMIT s.	APPROVAL NEEDED BY t.	MATERIAL NEEDED BY u.	CONTRACTOR ACTION: CODE v.	DATE w.	SUBMIT TO GOVERN-MENT x.	GOVERNMENT ACTION: CODE y.	DATE z.	REMARKS aa.
			1.2	Manufacturer's Literature	X										X											
			1.2	Equipment List				X								X										
			1.3.1	Delivery					X						X											
			3.5	Application of Pesticide					X							X										
			3.8.3.7	Maintenance Report					X						X											
			3.8	Turf Establishment Period					X						X											
			1.2	Seed							X					X										
			1.2	Fertilizer							X					X										
			1.2	Agricultural Limestone							X					X										
			1.2	Pesticide Material							X					X										
			1.2	Topsoil							X					X										

SUBMITTAL REGISTER
(ER 415 1-10)

CONTRACT NO.

TITLE AND LOCATION
C-17 Squad Ops/AMU Facility, McChord AFB, WA

CONTRACTOR

SPECIFICATION SECTION
02950

ACTIVITY NO. a.	TRANS-MITTAL NO. b.	ITEM NO c.	SPECIFICATION PARAGRAPH NUMBER d.	DESCRIPTION OF ITEM SUBMITTED e.	TYPE OF SUBMITTAL: DATA f.	DRAWINGS g.	INSTRUCTIONS h.	SCHEDULES i.	STATEMENTS j.	REPORTS k.	CERTIFICATES l.	SAMPLES m.	RECORDS n.	O&M MANUALS o.	CLASSIFICATION: INFORMATION ONLY p.	GOVERNMENT APPROVED q.	REVIEWER r.	CONTRACTOR SCHEDULE DATES: SUBMIT s.	APPROVAL NEEDED BY t.	MATERIAL NEEDED BY u.	CONTRACTOR ACTION: CODE v.	DATE w.	SUBMIT TO GOVERN-MENT x.	GOVERNMENT ACTION: CODE y.	DATE z.	REMARKS aa.
			2.7	Edging Material	X											X										
			3.8	Application of Pesticide Material				X							X											
			1.4.2	Delivery					X						X											
			3.8	Application of Pesticide Material					X						X											
			1.2	Soil Test						X						X										
			2.2	Topsoil							X					X										
			2.3	Soil Amendments							X					X										
			2.1	Plants							X					X										
			2.10	Pesticide							X					X										
			3.10	Plant Establishment Period									X		X											
			3.10.2.8	Maintenance Report									X		X											
			3.10.2.9	Maintenance Instructions									X			X										

SUBMITTAL REGISTER
(ER 415 1-10)

CONTRACT NO.

TITLE AND LOCATION
C-17 Squad Ops/AMU Facility, McChord AFB, WA

CONTRACTOR

SPECIFICATION SECTION
03100

ACTIVITY NO. a.	TRANS-MITTAL NO. b.	ITEM NO c.	SPECIFICATION PARAGRAPH NUMBER d.	DESCRIPTION OF ITEM SUBMITTED e.	TYPE OF SUBMITTAL: DATA f.	DRAWINGS g.	INSTRUCTIONS h.	SCHEDULES i.	STATEMENTS j.	REPORTS k.	CERTIFICATES l.	SAMPLES m.	RECORDS n.	O&M MANUALS o.	CLASSIFICATION: INFORMATION ONLY p.	GOVERNMENT APPROVED q.	REVIEWER r.	CONTRACTOR SCHEDULE DATES: SUBMIT s.	APPROVAL NEEDED BY t.	MATERIAL NEEDED BY u.	CONTRACTOR ACTION: CODE v.	DATE w.	SUBMIT TO GOVERN-MENT x.	GOVERNMENT ACTION: CODE y.	DATE z.	REMARKS aa.
			1.3	Design	X										X											
			1.2	Concrete Formwork	X										X											
			1.2	Concrete Formwork		X										X										
			2.1.5	Form Releasing Agents			X									X										

SUBMITTAL REGISTER
(ER 415 1-10)

CONTRACT NO.

TITLE AND LOCATION
C-17 Squad Ops/AMU Facility, McChord AFB, WA

CONTRACTOR

SPECIFICATION SECTION
03200

ACTIVITY NO. a.	TRANS-MITTAL NO. b.	ITEM NO c.	SPECIFICATION PARAGRAPH NUMBER d.	DESCRIPTION OF ITEM SUBMITTED e.	TYPE OF SUBMITTAL: DATA f.	DRAWINGS g.	INSTRUCTIONS h.	SCHEDULES i.	STATEMENTS j.	REPORTS k.	CERTIFICATES l.	SAMPLES m.	RECORDS n.	O&M MANUALS o.	CLASSIFICATION: INFORMATION ONLY p.	GOVERNMENT APPROVED q.	REVIEWER r.	CONTRACTOR SCHEDULE DATES: SUBMIT s.	APPROVAL NEEDED BY t.	MATERIAL NEEDED BY u.	CONTRACTOR ACTION: CODE v.	DATE w.	SUBMIT TO GOVERN-MENT x.	GOVERNMENT ACTION: CODE y.	DATE z.	REMARKS aa.
			1.2	Concrete Reinforcement System		X										X										
			1.2	Welder's Qualifications					X						X											
			2.3	Reinforcing Steel							X				X											

SUBMITTAL REGISTER
(ER 415 1-10)

CONTRACT NO.

TITLE AND LOCATION
C-17 Squad Ops/AMU Facility, McChord AFB, WA

CONTRACTOR

SPECIFICATION SECTION
03250

ACTIVITY NO. a.	TRANS-MITTAL NO. b.	ITEM NO c.	SPECIFICATION PARAGRAPH NUMBER d.	DESCRIPTION OF ITEM SUBMITTED e.	TYPE OF SUBMITTAL: DATA f.	DRAWINGS g.	INSTRUCTIONS h.	SCHEDULES i.	STATEMENTS j.	REPORTS k.	CERTIFICATES l.	SAMPLES m.	RECORDS n.	O&M MANUALS o.	CLASSIFICATION: INFORMATION ONLY p.	GOVERNMENT APPROVED q.	REVIEWER r.	CONTRACTOR SCHEDULE DATES: SUBMIT s.	APPROVAL NEEDED BY t.	MATERIAL NEEDED BY u.	CONTRACTOR ACTION: CODE v.	DATE w.	SUBMIT TO GOVERN-MENT x.	GOVERNMENT ACTION: CODE y.	DATE z.	REMARKS aa.
			1.2	Materials	X										X											
			1.2	Materials							X				X											

SUBMITTAL REGISTER
(ER 415 1-10)

CONTRACT NO.

TITLE AND LOCATION
C-17 Squad Ops/AMU Facility, McChord AFB, WA

CONTRACTOR

SPECIFICATION SECTION
03300

ACTIVITY NO. a.	TRANS-MITTAL NO. b.	ITEM NO c.	SPECIFICATION PARAGRAPH NUMBER d.	DESCRIPTION OF ITEM SUBMITTED e.	TYPE OF SUBMITTAL: DATA f.	DRAWINGS g.	INSTRUCTIONS h.	SCHEDULES i.	STATEMENTS j.	REPORTS k.	CERTIFICATES l.	SAMPLES m.	RECORDS n.	O&M MANUALS o.	CLASSIFICATION: INFORMATION ONLY p.	GOVERNMENT APPROVED q.	REVIEWER r.	CONTRACTOR SCHEDULE DATES: SUBMIT s.	APPROVAL NEEDED BY t.	MATERIAL NEEDED BY u.	CONTRACTOR ACTION: CODE v.	DATE w.	SUBMIT TO GOVERN-MENT x.	GOVERNMENT ACTION: CODE y.	DATE z.	REMARKS aa.
			1.2	Mix Design					X							X										
			1.2	Test Reports						X						X										
			2.2	Cementitious Materials							X					X										
			2.10	Perimeter Insulation							X				X											

SUBMITTAL REGISTER
(ER 415 1-10)

CONTRACT NO.

TITLE AND LOCATION
C-17 Squad Ops/AMU Facility, McChord AFB, WA

CONTRACTOR

SPECIFICATION SECTION
03450

ACTIVITY NO. a.	TRANS-MITTAL NO. b.	ITEM NO c.	SPECIFICATION PARAGRAPH NUMBER d.	DESCRIPTION OF ITEM SUBMITTED e.	TYPE OF SUBMITTAL: DATA f.	DRAWINGS g.	INSTRUCTIONS h.	SCHEDULES i.	STATEMENTS j.	REPORTS k.	CERTIFICATES l.	SAMPLES m.	RECORDS n.	O&M MANUALS o.	CLASSIFICATION: INFORMATION ONLY p.	GOVERNMENT APPROVED q.	REVIEWER r.	CONTRACTOR SCHEDULE DATES: SUBMIT s.	APPROVAL NEEDED BY t.	MATERIAL NEEDED BY u.	CONTRACTOR ACTION: CODE v.	DATE w.	SUBMIT TO GOVERN-MENT x.	GOVERNMENT ACTION: CODE y.	DATE z.	REMARKS aa.
			1.3.5	Calculations	X											X										
			1.4	Mix Design	X											X										
			1.4	Architectural Concrete System		X										X										
			2.1	Materials						X					X											
			2.2	Precast Concrete Units								X				X										
			1.4	Manufacturer's Qualifications									X		X											

SUBMITTAL REGISTER
(ER 415 1-10)

CONTRACT NO.

TITLE AND LOCATION
C-17 Squad Ops/AMU Facility, McChord AFB, WA

CONTRACTOR

SPECIFICATION SECTION
04255

ACTIVITY NO. a.	TRANS-MITTAL NO. b.	ITEM NO c.	SPECIFICATION PARAGRAPH NUMBER d.	DESCRIPTION OF ITEM SUBMITTED e.	TYPE OF SUBMITTAL: DATA f.	DRAWINGS g.	INSTRUCTIONS h.	SCHEDULES i.	STATEMENTS j.	REPORTS k.	CERTIFICATES l.	SAMPLES m.	RECORDS n.	O&M MANUALS o.	CLASSIFICATION: INFORMATION ONLY p.	GOVERNMENT APPROVED q.	REVIEWER r.	CONTRACTOR SCHEDULE DATES: SUBMIT s.	APPROVAL NEEDED BY t.	MATERIAL NEEDED BY u.	CONTRACTOR ACTION: CODE v.	DATE w.	SUBMIT TO GOVERN-MENT x.	GOVERNMENT ACTION: CODE y.	DATE z.	REMARKS aa.
			1.2	Masonry Veneer/Steel Stud Wall	X											X										
				System																						
			1.2	Masonry Veneer/Steel Stud Wall		X										X										
				System																						
			1.2	Expansion Joint Materials								X				X										
			1.2	Brick Veneer Units								X				X										
			1.2	Sample Panel								X				X										
			1.2	Brick Veneer Units							X				X											
			1.2	Joint Reinforcement							X				X											
			1.2	Expansion Joint Materials							X				X											
			1.2	Insulation							X				X											
			1.2	Gypsum Sheathing							X				X											
			1.2	Moisture Barrier							X				X											
			1.2	Vapor Barrier							X				X											
			1.2	Veneer Anchors							X				X											
			1.2	Welders Qualification							X				X											

SUBMITTAL REGISTER
(ER 415 1-10)

CONTRACT NO.

TITLE AND LOCATION
C-17 Squad Ops/AMU Facility, McChord AFB, WA

CONTRACTOR

SPECIFICATION SECTION
05055

ACTIVITY NO. a.	TRANS-MITTAL NO. b.	ITEM NO c.	SPECIFICATION PARAGRAPH NUMBER d.	DESCRIPTION OF ITEM SUBMITTED e.	TYPE OF SUBMITTAL: DATA f.	DRAWINGS g.	INSTRUCTIONS h.	SCHEDULES i.	STATEMENTS j.	REPORTS k.	CERTIFICATES l.	SAMPLES m.	RECORDS n.	O&M MANUALS o.	CLASSIFICATION: INFORMATION ONLY p.	GOVERNMENT APPROVED q.	REVIEWER r.	CONTRACTOR SCHEDULE DATES: SUBMIT s.	APPROVAL NEEDED BY t.	MATERIAL NEEDED BY u.	CONTRACTOR ACTION: CODE v.	DATE w.	SUBMIT TO GOVERN-MENT x.	GOVERNMENT ACTION: CODE y.	DATE z.	REMARKS aa.
			1.5	Welding Procedure Qualifications					X							X										
			1.6	Welder, Welding Operator, and					X							X										
				Tacker Qualification																						
			1.7	Inspector Qualification					X							X										
			3.2	Quality Control									X			X										

SUBMITTAL REGISTER
(ER 415 1-10)

CONTRACT NO.

TITLE AND LOCATION
C-17 Squad Ops/AMU Facility, McChord AFB, WA

CONTRACTOR

SPECIFICATION SECTION
05120

ACTIVITY NO. a.	TRANS-MITTAL NO. b.	ITEM NO c.	SPECIFICATION PARAGRAPH NUMBER d.	DESCRIPTION OF ITEM SUBMITTED e.	TYPE OF SUBMITTAL: DATA f.	DRAWINGS g.	INSTRUCTIONS h.	SCHEDULES i.	STATEMENTS j.	REPORTS k.	CERTIFICATES l.	SAMPLES m.	RECORDS n.	O&M MANUALS o.	CLASSIFICATION: INFORMATION ONLY p.	GOVERNMENT APPROVED q.	REVIEWER r.	CONTRACTOR SCHEDULE DATES: SUBMIT s.	APPROVAL NEEDED BY t.	MATERIAL NEEDED BY u.	CONTRACTOR ACTION: CODE v.	DATE w.	SUBMIT TO GOVERN-MENT x.	GOVERNMENT ACTION: CODE y.	DATE z.	REMARKS aa.
			1.3	Structural Steel System		X										X										
			1.3	Structural Connections		X										X										
			3.2	Erection					X							X										
			1.3	Survey					X							X										
			1.3	Mill Test Reports							X					X										
			3.1	Fabrication							X					X										
			1.3	Welder Qualifications							X					X										
			2.4	High Strength Bolts								X				X										

SUBMITTAL REGISTER
(ER 415 1-10)

CONTRACT NO.

TITLE AND LOCATION
C-17 Squad Ops/AMU Facility, McChord AFB, WA

CONTRACTOR

SPECIFICATION SECTION
05210

ACTIVITY NO. a.	TRANS-MITTAL NO. b.	ITEM NO c.	SPECIFICATION PARAGRAPH NUMBER d.	DESCRIPTION OF ITEM SUBMITTED e.	TYPE OF SUBMITTAL: DATA f.	DRAWINGS g.	INSTRUCTIONS h.	SCHEDULES i.	STATEMENTS j.	REPORTS k.	CERTIFICATES l.	SAMPLES m.	RECORDS n.	O&M MANUALS o.	CLASSIFICATION: INFORMATION ONLY p.	GOVERNMENT APPROVED q.	REVIEWER r.	CONTRACTOR SCHEDULE DATES: SUBMIT s.	APPROVAL NEEDED BY t.	MATERIAL NEEDED BY u.	CONTRACTOR ACTION: CODE v.	DATE w.	SUBMIT TO GOVERN-MENT x.	GOVERNMENT ACTION: CODE y.	DATE z.	REMARKS aa.
			1.2	Steel Joists		X										X										
			1.2	Steel Joists							X					X										

SUBMITTAL REGISTER
(ER 415 1-10)

CONTRACT NO.

TITLE AND LOCATION
C-17 Squad Ops/AMU Facility, McChord AFB, WA

CONTRACTOR

SPECIFICATION SECTION
05300

ACTIVITY NO. a.	TRANS-MITTAL NO. b.	ITEM NO c.	SPECIFICATION PARAGRAPH NUMBER d.	DESCRIPTION OF ITEM SUBMITTED e.	TYPE OF SUBMITTAL: DATA f.	DRAWINGS g.	INSTRUCTIONS h.	SCHEDULES i.	STATEMENTS j.	REPORTS k.	CERTIFICATES l.	SAMPLES m.	RECORDS n.	O&M MANUALS o.	CLASSIFICATION: INFORMATION ONLY p.	GOVERNMENT APPROVED q.	REVIEWER r.	CONTRACTOR SCHEDULE DATES: SUBMIT s.	APPROVAL NEEDED BY t.	MATERIAL NEEDED BY u.	CONTRACTOR ACTION: CODE v.	DATE w.	SUBMIT TO GOVERN-MENT x.	GOVERNMENT ACTION: CODE y.	DATE z.	REMARKS aa.
			2.1	Deck Units	X											X										
			2.1	Deck Units		X										X										
			2.5	Accessories		X									X											
			3.2	Attachments		X									X											
			3.3	Holes and Openings		X									X											
			2.1	Deck Units							X					X										
			3.2	Attachments							X					X										
			2.1	Deck Units								X			X											
			2.5	Accessories								X			X											
			3.2	Attachments					X							X										

SUBMITTAL REGISTER
(ER 415 1-10)

CONTRACT NO.

TITLE AND LOCATION
C-17 Squad Ops/AMU Facility, McChord AFB, WA

CONTRACTOR

SPECIFICATION SECTION
05500

ACTIVITY NO. a.	TRANS-MITTAL NO. b.	ITEM NO c.	SPECIFICATION PARAGRAPH NUMBER d.	DESCRIPTION OF ITEM SUBMITTED e.	TYPE OF SUBMITTAL: DATA f.	DRAWINGS g.	INSTRUCTIONS h.	SCHEDULES i.	STATEMENTS j.	REPORTS k.	CERTIFICATES l.	SAMPLES m.	RECORDS n.	O&M MANUALS o.	CLASSIFICATION: INFORMATION ONLY p.	GOVERNMENT APPROVED q.	REVIEWER r.	CONTRACTOR SCHEDULE DATES: SUBMIT s.	APPROVAL NEEDED BY t.	MATERIAL NEEDED BY u.	CONTRACTOR ACTION: CODE v.	DATE w.	SUBMIT TO GOVERN-MENT x.	GOVERNMENT ACTION: CODE y.	DATE z.	REMARKS aa.
			1.2	Miscellaneous Metal Items		X										X										
			1.2	Miscellaneous Metal Items								X				X										

SUBMITTAL REGISTER
(ER 415 1-10)

CONTRACT NO.

TITLE AND LOCATION
C-17 Squad Ops/AMU Facility, McChord AFB, WA

CONTRACTOR

SPECIFICATION SECTION
06100

ACTIVITY NO. a.	TRANS-MITTAL NO. b.	ITEM NO c.	SPECIFICATION PARAGRAPH NUMBER d.	DESCRIPTION OF ITEM SUBMITTED e.	TYPE OF SUBMITTAL: DATA f.	DRAWINGS g.	INSTRUCTIONS h.	SCHEDULES i.	STATEMENTS j.	REPORTS k.	CERTIFICATES l.	SAMPLES m.	RECORDS n.	O&M MANUALS o.	CLASSIFICATION: INFORMATION ONLY p.	GOVERNMENT APPROVED q.	REVIEWER r.	CONTRACTOR SCHEDULE DATES: SUBMIT s.	APPROVAL NEEDED BY t.	MATERIAL NEEDED BY u.	CONTRACTOR ACTION: CODE v.	DATE w.	SUBMIT TO GOVERN-MENT x.	GOVERNMENT ACTION: CODE y.	DATE z.	REMARKS aa.
			1.2	Nailers and Nailing Strips		X									X											
			2.1.1	Grading and Marking							X				X											

SUBMITTAL REGISTER
(ER 415 1-10)

CONTRACT NO.

TITLE AND LOCATION
C-17 Squad Ops/AMU Facility, McChord AFB, WA

CONTRACTOR

SPECIFICATION SECTION
06200

ACTIVITY NO. a.	TRANS-MITTAL NO. b.	ITEM NO c.	SPECIFICATION PARAGRAPH NUMBER d.	DESCRIPTION OF ITEM SUBMITTED e.	TYPE OF SUBMITTAL: DATA f.	DRAWINGS g.	INSTRUCTIONS h.	SCHEDULES i.	STATEMENTS j.	REPORTS k.	CERTIFICATES l.	SAMPLES m.	RECORDS n.	O&M MANUALS o.	CLASSIFICATION: INFORMATION ONLY p.	GOVERNMENT APPROVED q.	REVIEWER r.	CONTRACTOR SCHEDULE DATES: SUBMIT s.	APPROVAL NEEDED BY t.	MATERIAL NEEDED BY u.	CONTRACTOR ACTION: CODE v.	DATE w.	SUBMIT TO GOVERN-MENT x.	GOVERNMENT ACTION: CODE y.	DATE z.	REMARKS aa.
			1.2	Shelf Brackets	X										X											
			1.2	Finish Carpentry		X										X										
			1.2	Moldings and Trim								X			X											

SUBMITTAL REGISTER
(ER 415 1-10)

CONTRACT NO.

TITLE AND LOCATION
C-17 Squad Ops/AMU Facility, McChord AFB, WA

CONTRACTOR

SPECIFICATION SECTION
07112

ACTIVITY NO. a.	TRANS-MITTAL NO. b.	ITEM NO c.	SPECIFICATION PARAGRAPH NUMBER d.	DESCRIPTION OF ITEM SUBMITTED e.	TYPE OF SUBMITTAL: DATA f.	DRAWINGS g.	INSTRUCTIONS h.	SCHEDULES i.	STATEMENTS j.	REPORTS k.	CERTIFICATES l.	SAMPLES m.	RECORDS n.	O&M MANUALS o.	CLASSIFICATION: INFORMATION ONLY p.	GOVERNMENT APPROVED q.	REVIEWER r.	CONTRACTOR SCHEDULE DATES: SUBMIT s.	APPROVAL NEEDED BY t.	MATERIAL NEEDED BY u.	CONTRACTOR ACTION: CODE v.	DATE w.	SUBMIT TO GOVERN-MENT x.	GOVERNMENT ACTION: CODE y.	DATE z.	REMARKS aa.
			1.2	Reinforcing Fabric	X										X											
			1.2	Application			X								X											
			1.2	Materials							X				X											

SUBMITTAL REGISTER
(ER 415 1-10)

CONTRACT NO.

TITLE AND LOCATION
C-17 Squad Ops/AMU Facility, McChord AFB, WA

CONTRACTOR

SPECIFICATION SECTION
07220

ACTIVITY NO. a.	TRANS-MITTAL NO. b.	ITEM NO c.	SPECIFICATION PARAGRAPH NUMBER d.	DESCRIPTION OF ITEM SUBMITTED e.	TYPE OF SUBMITTAL: DATA f.	DRAWINGS g.	INSTRUCTIONS h.	SCHEDULES i.	STATEMENTS j.	REPORTS k.	CERTIFICATES l.	SAMPLES m.	RECORDS n.	O&M MANUALS o.	CLASSIFICATION: INFORMATION ONLY p.	GOVERNMENT APPROVED q.	REVIEWER r.	CONTRACTOR SCHEDULE DATES: SUBMIT s.	APPROVAL NEEDED BY t.	MATERIAL NEEDED BY u.	CONTRACTOR ACTION: CODE v.	DATE w.	SUBMIT TO GOVERN-MENT x.	GOVERNMENT ACTION: CODE y.	DATE z.	REMARKS aa.
			3.7	Application of Insulation			X									X										
			1.2	Inspection					X							X										
			2.2	Insulation							X				X											
			1.2	Glass Roofing Felt							X				X											

SUBMITTAL REGISTER
(ER 415 1-10)

CONTRACT NO.

TITLE AND LOCATION
C-17 Squad Ops/AMU Facility, McChord AFB, WA

CONTRACTOR

SPECIFICATION SECTION
07250

ACTIVITY NO. a.	TRANS-MITTAL NO. b.	ITEM NO c.	SPECIFICATION PARAGRAPH NUMBER d.	DESCRIPTION OF ITEM SUBMITTED e.	TYPE OF SUBMITTAL: DATA f.	DRAWINGS g.	INSTRUCTIONS h.	SCHEDULES i.	STATEMENTS j.	REPORTS k.	CERTIFICATES l.	SAMPLES m.	RECORDS n.	O&M MANUALS o.	CLASSIFICATION: INFORMATION ONLY p.	GOVERNMENT APPROVED q.	REVIEWER r.	CONTRACTOR SCHEDULE DATES: SUBMIT s.	APPROVAL NEEDED BY t.	MATERIAL NEEDED BY u.	CONTRACTOR ACTION: CODE v.	DATE w.	SUBMIT TO GOVERN-MENT x.	GOVERNMENT ACTION: CODE y.	DATE z.	REMARKS aa.
			1.2	Fireproofing Material	X											X										
			1.2	UL Test Assembly						X					X											
			3.5	Field Tests						X					X											
			1.5	Installer Qualifications							X				X											
			1.2	Surface Acceptability							X				X											
			3.5.3	Manufacturer's Inspection							X					X										
			1.2	Spray-Applied Fireproofing								X				X										

SUBMITTAL REGISTER
(ER 415 1-10)

CONTRACT NO.

TITLE AND LOCATION
C-17 Squad Ops/AMU Facility, McChord AFB, WA

CONTRACTOR

SPECIFICATION SECTION
07270

ACTIVITY NO. a.	TRANS-MITTAL NO. b.	ITEM NO c.	SPECIFICATION PARAGRAPH NUMBER d.	DESCRIPTION OF ITEM SUBMITTED e.	TYPE OF SUBMITTAL: DATA f.	DRAWINGS g.	INSTRUCTIONS h.	SCHEDULES i.	STATEMENTS j.	REPORTS k.	CERTIFICATES l.	SAMPLES m.	RECORDS n.	O&M MANUALS o.	CLASSIFICATION: INFORMATION ONLY p.	GOVERNMENT APPROVED q.	REVIEWER r.	CONTRACTOR SCHEDULE DATES: SUBMIT s.	APPROVAL NEEDED BY t.	MATERIAL NEEDED BY u.	CONTRACTOR ACTION: CODE v.	DATE w.	SUBMIT TO GOVERN-MENT x.	GOVERNMENT ACTION: CODE y.	DATE z.	REMARKS aa.
			2.1	Firestopping Materials		X										X										
			2.1	Firestopping Materials							X				X											
			1.5	Installer Qualifications							X				X											
			1.2	Inspection							X					X										

SUBMITTAL REGISTER
(ER 415 1-10)

CONTRACT NO.

TITLE AND LOCATION
C-17 Squad Ops/AMU Facility, McChord AFB, WA

CONTRACTOR

SPECIFICATION SECTION
07412

ACTIVITY NO. a.	TRANS-MITTAL NO. b.	ITEM NO c.	SPECIFICATION PARAGRAPH NUMBER d.	DESCRIPTION OF ITEM SUBMITTED e.	TYPE OF SUBMITTAL: DATA f.	DRAWINGS g.	INSTRUCTIONS h.	SCHEDULES i.	STATEMENTS j.	REPORTS k.	CERTIFICATES l.	SAMPLES m.	RECORDS n.	O&M MANUALS o.	CLASSIFICATION: INFORMATION ONLY p.	GOVERNMENT APPROVED q.	REVIEWER r.	CONTRACTOR SCHEDULE DATES: SUBMIT s.	APPROVAL NEEDED BY t.	MATERIAL NEEDED BY u.	CONTRACTOR ACTION: CODE v.	DATE w.	SUBMIT TO GOVERN-MENT x.	GOVERNMENT ACTION: CODE y.	DATE z.	REMARKS aa.
			1.5	Metal Roofing		X										X										
			2.1	Roof Panels							X				X											
			3.1	Installation							X				X											
			2.2	Accessories							X				X											
			2.7	Insulation							X				X											
			1.4.2	Installer							X				X											
			1.5	Warranties							X				X											
			2.2	Accessories								X				X										
			2.1	Roof Panels								X				X										
			2.3	Fasteners								X			X											
			2.10	Gaskets and Insulating Compounds								X			X											
			2.9	Sealant								X			X											

SUBMITTAL REGISTER
(ER 415 1-10)

CONTRACT NO.

TITLE AND LOCATION
C-17 Squad Ops/AMU Facility, McChord AFB, WA

CONTRACTOR

SPECIFICATION SECTION
07530

ACTIVITY NO. a.	TRANS-MITTAL NO. b.	ITEM NO c.	SPECIFICATION PARAGRAPH NUMBER d.	DESCRIPTION OF ITEM SUBMITTED e.	TYPE OF SUBMITTAL: DATA f.	DRAWINGS g.	INSTRUCTIONS h.	SCHEDULES i.	STATEMENTS j.	REPORTS k.	CERTIFICATES l.	SAMPLES m.	RECORDS n.	O&M MANUALS o.	CLASSIFICATION: INFORMATION ONLY p.	GOVERNMENT APPROVED q.	REVIEWER r.	CONTRACTOR SCHEDULE DATES: SUBMIT s.	APPROVAL NEEDED BY t.	MATERIAL NEEDED BY u.	CONTRACTOR ACTION: CODE v.	DATE w.	SUBMIT TO GOVERN-MENT x.	GOVERNMENT ACTION: CODE y.	DATE z.	REMARKS aa.
			1.2	Roofing System		X										X										
			1.2	Installation			X									X										
			1.2	Protection Plan					X							X										
			1.2	Inspection					X							X										
			1.2	Materials							X				X											

SUBMITTAL REGISTER
(ER 415 1-10)

CONTRACT NO.

TITLE AND LOCATION
C-17 Squad Ops/AMU Facility, McChord AFB, WA

CONTRACTOR

SPECIFICATION SECTION
07600

ACTIVITY NO. a.	TRANS-MITTAL NO. b.	ITEM NO c.	SPECIFICATION PARAGRAPH NUMBER d.	DESCRIPTION OF ITEM SUBMITTED e.	TYPE OF SUBMITTAL: DATA f.	DRAWINGS g.	INSTRUCTIONS h.	SCHEDULES i.	STATEMENTS j.	REPORTS k.	CERTIFICATES l.	SAMPLES m.	RECORDS n.	O&M MANUALS o.	CLASSIFICATION: INFORMATION ONLY p.	GOVERNMENT APPROVED q.	REVIEWER r.	CONTRACTOR SCHEDULE DATES: SUBMIT s.	APPROVAL NEEDED BY t.	MATERIAL NEEDED BY u.	CONTRACTOR ACTION: CODE v.	DATE w.	SUBMIT TO GOVERN-MENT x.	GOVERNMENT ACTION: CODE y.	DATE z.	REMARKS aa.
			2.1	Materials		X										X										

SUBMITTAL REGISTER
(ER 415 1-10)

CONTRACT NO.

TITLE AND LOCATION
C-17 Squad Ops/AMU Facility, McChord AFB, WA

CONTRACTOR

SPECIFICATION SECTION
07920

ACTIVITY NO. a.	TRANS-MITTAL NO. b.	ITEM NO c.	SPECIFICATION PARAGRAPH NUMBER d.	DESCRIPTION OF ITEM SUBMITTED e.	TYPE OF SUBMITTAL: DATA f.	DRAWINGS g.	INSTRUCTIONS h.	SCHEDULES i.	STATEMENTS j.	REPORTS k.	CERTIFICATES l.	SAMPLES m.	RECORDS n.	O&M MANUALS o.	CLASSIFICATION: INFORMATION ONLY p.	GOVERNMENT APPROVED q.	REVIEWER r.	CONTRACTOR SCHEDULE DATES: SUBMIT s.	APPROVAL NEEDED BY t.	MATERIAL NEEDED BY u.	CONTRACTOR ACTION: CODE v.	DATE w.	SUBMIT TO GOVERN-MENT x.	GOVERNMENT ACTION: CODE y.	DATE z.	REMARKS aa.
			1.2	Backing	X										X											
			1.2	Bond-Breaker	X										X											
			1.2	Sealant	X										X											
			1.2	Sealant							X				X											

SUBMITTAL REGISTER
(ER 415 1-10)

CONTRACT NO.

TITLE AND LOCATION
C-17 Squad Ops/AMU Facility, McChord AFB, WA

CONTRACTOR

SPECIFICATION SECTION
08110

ACTIVITY NO. a.	TRANS-MITTAL NO. b.	ITEM NO c.	SPECIFICATION PARAGRAPH NUMBER d.	DESCRIPTION OF ITEM SUBMITTED e.	TYPE OF SUBMITTAL: DATA f.	DRAWINGS g.	INSTRUCTIONS h.	SCHEDULES i.	STATEMENTS j.	REPORTS k.	CERTIFICATES l.	SAMPLES m.	RECORDS n.	O&M MANUALS o.	CLASSIFICATION: INFORMATION ONLY p.	GOVERNMENT APPROVED q.	REVIEWER r.	CONTRACTOR SCHEDULE DATES: SUBMIT s.	APPROVAL NEEDED BY t.	MATERIAL NEEDED BY u.	CONTRACTOR ACTION: CODE v.	DATE w.	SUBMIT TO GOVERN-MENT x.	GOVERNMENT ACTION: CODE y.	DATE z.	REMARKS aa.
			1.2	Steel Doors and Frames		X										X										
			2.2	Fire Rated Doors						X						X										
			2.2	Fire Rated Doors							X				X											
			2.3	Thermal Insulated Doors							X				X											

SUBMITTAL REGISTER
(ER 415 1-10)

CONTRACT NO.

TITLE AND LOCATION
C-17 Squad Ops/AMU Facility, McChord AFB, WA

CONTRACTOR

SPECIFICATION SECTION
08120

ACTIVITY NO. a.	TRANS-MITTAL NO. b.	ITEM NO c.	SPECIFICATION PARAGRAPH NUMBER d.	DESCRIPTION OF ITEM SUBMITTED e.	TYPE OF SUBMITTAL: DATA f.	DRAWINGS g.	INSTRUCTIONS h.	SCHEDULES i.	STATEMENTS j.	REPORTS k.	CERTIFICATES l.	SAMPLES m.	RECORDS n.	O&M MANUALS o.	CLASSIFICATION: INFORMATION ONLY p.	GOVERNMENT APPROVED q.	REVIEWER r.	CONTRACTOR SCHEDULE DATES: SUBMIT s.	APPROVAL NEEDED BY t.	MATERIAL NEEDED BY u.	CONTRACTOR ACTION: CODE v.	DATE w.	SUBMIT TO GOVERN-MENT x.	GOVERNMENT ACTION: CODE y.	DATE z.	REMARKS aa.
			1.4	Aluminum Doors and Frames	X										X											
			1.4	Aluminum Doors and Frames		X										X										
			3.1.2	Installation			X								X											
			1.4	Cleaning			X								X											
			1.4	Full-Glazed						X					X											
			2.1.1	Finishes								X				X										

SUBMITTAL REGISTER
(ER 415 1-10)

CONTRACT NO.

TITLE AND LOCATION
C-17 Squad Ops/AMU Facility, McChord AFB, WA

CONTRACTOR

SPECIFICATION SECTION
08201

ACTIVITY NO. a.	TRANS-MITTAL NO. b.	ITEM NO c.	SPECIFICATION PARAGRAPH NUMBER d.	DESCRIPTION OF ITEM SUBMITTED e.	TYPE OF SUBMITTAL: DATA f.	DRAWINGS g.	INSTRUCTIONS h.	SCHEDULES i.	STATEMENTS j.	REPORTS k.	CERTIFICATES l.	SAMPLES m.	RECORDS n.	O&M MANUALS o.	CLASSIFICATION: INFORMATION ONLY p.	GOVERNMENT APPROVED q.	REVIEWER r.	CONTRACTOR SCHEDULE DATES: SUBMIT s.	APPROVAL NEEDED BY t.	MATERIAL NEEDED BY u.	CONTRACTOR ACTION: CODE v.	DATE w.	SUBMIT TO GOVERN-MENT x.	GOVERNMENT ACTION: CODE y.	DATE z.	REMARKS aa.
			1.3	Wood Doors and Frames		X										X										
			2.3	Fire Rated Doors							X				X											
			1.3	Adhesives							X				X											
			2.4.2	Factory Coated Natural Finish								X				X										
			1.3	Factory Coated Paint Finish								X				X										

SUBMITTAL REGISTER
(ER 415 1-10)

CONTRACT NO.

TITLE AND LOCATION
C-17 Squad Ops/AMU Facility, McChord AFB, WA

CONTRACTOR

SPECIFICATION SECTION
08330

ACTIVITY NO. a.	TRANS-MITTAL NO. b.	ITEM NO c.	SPECIFICATION PARAGRAPH NUMBER d.	DESCRIPTION OF ITEM SUBMITTED e.	TYPE OF SUBMITTAL: DATA f.	DRAWINGS g.	INSTRUCTIONS h.	SCHEDULES i.	STATEMENTS j.	REPORTS k.	CERTIFICATES l.	SAMPLES m.	RECORDS n.	O&M MANUALS o.	CLASSIFICATION: INFORMATION ONLY p.	GOVERNMENT APPROVED q.	REVIEWER r.	CONTRACTOR SCHEDULE DATES: SUBMIT s.	APPROVAL NEEDED BY t.	MATERIAL NEEDED BY u.	CONTRACTOR ACTION: CODE v.	DATE w.	SUBMIT TO GOVERN-MENT x.	GOVERNMENT ACTION: CODE y.	DATE z.	REMARKS aa.
			1.3	Overhead Rolling Door Unit	X											X										
			1.3	Overhead Rolling Door Unit		X										X										
			1.3	Overhead Rolling Door Unit			X								X											
			1.3	Tests						X					X											
			2.2	Fire Doors							X				X											
			1.3	Thermal Strip Curtain								X				X										
			1.3	Overhead Rolling Door Unit										X	X											

SUBMITTAL REGISTER
(ER 415 1-10)

CONTRACT NO.

TITLE AND LOCATION
C-17 Squad Ops/AMU Facility, McChord AFB, WA

CONTRACTOR

SPECIFICATION SECTION
08331

ACTIVITY NO. a.	TRANS-MITTAL NO. b.	ITEM NO c.	SPECIFICATION PARAGRAPH NUMBER d.	DESCRIPTION OF ITEM SUBMITTED e.	TYPE OF SUBMITTAL: DATA f.	DRAWINGS g.	INSTRUCTIONS h.	SCHEDULES i.	STATEMENTS j.	REPORTS k.	CERTIFICATES l.	SAMPLES m.	RECORDS n.	O&M MANUALS o.	CLASSIFICATION: INFORMATION ONLY p.	GOVERNMENT APPROVED q.	REVIEWER r.	CONTRACTOR SCHEDULE DATES: SUBMIT s.	APPROVAL NEEDED BY t.	MATERIAL NEEDED BY u.	CONTRACTOR ACTION: CODE v.	DATE w.	SUBMIT TO GOVERN-MENT x.	GOVERNMENT ACTION: CODE y.	DATE z.	REMARKS aa.
			1.3	Coiling Counter Door Unit	X										X											
			1.3	Coiling Counter Door Unit		X										X										
			1.3	Coiling Counter Door Unit			X								X											
			1.3	Coiling Counter Door Unit										X	X											

SUBMITTAL REGISTER
(ER 415 1-10)

CONTRACT NO.

TITLE AND LOCATION
C-17 Squad Ops/AMU Facility, McChord AFB, WA

CONTRACTOR

SPECIFICATION SECTION
08353

ACTIVITY NO. a.	TRANS-MITTAL NO. b.	ITEM NO c.	SPECIFICATION PARAGRAPH NUMBER d.	DESCRIPTION OF ITEM SUBMITTED e.	TYPE OF SUBMITTAL: DATA f.	DRAWINGS g.	INSTRUCTIONS h.	SCHEDULES i.	STATEMENTS j.	REPORTS k.	CERTIFICATES l.	SAMPLES m.	RECORDS n.	O&M MANUALS o.	CLASSIFICATION: INFORMATION ONLY p.	GOVERNMENT APPROVED q.	REVIEWER r.	CONTRACTOR SCHEDULE DATES: SUBMIT s.	APPROVAL NEEDED BY t.	MATERIAL NEEDED BY u.	CONTRACTOR ACTION: CODE v.	DATE w.	SUBMIT TO GOVERN-MENT x.	GOVERNMENT ACTION: CODE y.	DATE z.	REMARKS aa.
			2.2	Operable Partitions		X										X										
			2.1	Materials							X				X											
			2.2	Operable Partitions							X				X											
			2.2	Operable Partitions										X	X											

SUBMITTAL REGISTER
(ER 415 1-10)

CONTRACT NO.

TITLE AND LOCATION
C-17 Squad Ops/AMU Facility, McChord AFB, WA

CONTRACTOR

SPECIFICATION SECTION
08520

ACTIVITY NO. a.	TRANS-MITTAL NO. b.	ITEM NO c.	SPECIFICATION PARAGRAPH NUMBER d.	DESCRIPTION OF ITEM SUBMITTED e.	TYPE OF SUBMITTAL: DATA f.	DRAWINGS g.	INSTRUCTIONS h.	SCHEDULES i.	STATEMENTS j.	REPORTS k.	CERTIFICATES l.	SAMPLES m.	RECORDS n.	O&M MANUALS o.	CLASSIFICATION: INFORMATION ONLY p.	GOVERNMENT APPROVED q.	REVIEWER r.	CONTRACTOR SCHEDULE DATES: SUBMIT s.	APPROVAL NEEDED BY t.	MATERIAL NEEDED BY u.	CONTRACTOR ACTION: CODE v.	DATE w.	SUBMIT TO GOVERN-MENT x.	GOVERNMENT ACTION: CODE y.	DATE z.	REMARKS aa.
			1.3	Aluminum Windows	X											X										
			1.3	Aluminum Windows		X										X										
			1.3	Aluminum Windows			X								X											
			1.3	Aluminum Windows						X					X											
			1.3	Aluminum Windows							X				X											
			1.3	Aluminum Windows								X				X										

SUBMITTAL REGISTER
(ER 415 1-10)

CONTRACT NO.

TITLE AND LOCATION
C-17 Squad Ops/AMU Facility, McChord AFB, WA

CONTRACTOR

SPECIFICATION SECTION
08700

ACTIVITY NO. a.	TRANS-MITTAL NO. b.	ITEM NO c.	SPECIFICATION PARAGRAPH NUMBER d.	DESCRIPTION OF ITEM SUBMITTED e.	TYPE OF SUBMITTAL: DATA f.	DRAWINGS g.	INSTRUCTIONS h.	SCHEDULES i.	STATEMENTS j.	REPORTS k.	CERTIFICATES l.	SAMPLES m.	RECORDS n.	O&M MANUALS o.	CLASSIFICATION: INFORMATION ONLY p.	GOVERNMENT APPROVED q.	REVIEWER r.	CONTRACTOR SCHEDULE DATES: SUBMIT s.	APPROVAL NEEDED BY t.	MATERIAL NEEDED BY u.	CONTRACTOR ACTION: CODE v.	DATE w.	SUBMIT TO GOVERN-MENT x.	GOVERNMENT ACTION: CODE y.	DATE z.	REMARKS aa.
			1.2	Hardware and Accessories	X											X										
			1.2	Hardware Devices		X										X										
			1.2	Hardware Schedule				X								X										
			1.2	Keying Schedule				X								X										
			1.2	Hardware and Accessories							X					X										

SUBMITTAL REGISTER
(ER 415 1-10)

CONTRACT NO.

TITLE AND LOCATION
C-17 Squad Ops/AMU Facility, McChord AFB, WA

CONTRACTOR

SPECIFICATION SECTION
08810

ACTIVITY NO. a.	TRANS-MITTAL NO. b.	ITEM NO c.	SPECIFICATION PARAGRAPH NUMBER d.	DESCRIPTION OF ITEM SUBMITTED e.	TYPE OF SUBMITTAL: DATA f.	DRAWINGS g.	INSTRUCTIONS h.	SCHEDULES i.	STATEMENTS j.	REPORTS k.	CERTIFICATES l.	SAMPLES m.	RECORDS n.	O&M MANUALS o.	CLASSIFICATION: INFORMATION ONLY p.	GOVERNMENT APPROVED q.	REVIEWER r.	CONTRACTOR SCHEDULE DATES: SUBMIT s.	APPROVAL NEEDED BY t.	MATERIAL NEEDED BY u.	CONTRACTOR ACTION: CODE v.	DATE w.	SUBMIT TO GOVERN-MENT x.	GOVERNMENT ACTION: CODE y.	DATE z.	REMARKS aa.
			1.2	Glass	X										X											
			1.2	Glazing Accessories	X										X											
			1.2	Glazing Materials and Accessories		X										X										
			1.2	Glass							X				X											
			1.2	Glass								X				X										

SUBMITTAL REGISTER
(ER 415 1-10)

CONTRACT NO.

TITLE AND LOCATION
C-17 Squad Ops/AMU Facility, McChord AFB, WA

CONTRACTOR

SPECIFICATION SECTION
08950

ACTIVITY NO. a.	TRANS-MITTAL NO. b.	ITEM NO c.	SPECIFICATION PARAGRAPH NUMBER d.	DESCRIPTION OF ITEM SUBMITTED e.	TYPE OF SUBMITTAL: DATA f.	DRAWINGS g.	INSTRUCTIONS h.	SCHEDULES i.	STATEMENTS j.	REPORTS k.	CERTIFICATES l.	SAMPLES m.	RECORDS n.	O&M MANUALS o.	CLASSIFICATION: INFORMATION ONLY p.	GOVERNMENT APPROVED q.	REVIEWER r.	CONTRACTOR SCHEDULE DATES: SUBMIT s.	APPROVAL NEEDED BY t.	MATERIAL NEEDED BY u.	CONTRACTOR ACTION: CODE v.	DATE w.	SUBMIT TO GOVERN-MENT x.	GOVERNMENT ACTION: CODE y.	DATE z.	REMARKS aa.
			1.2	Product Data	X										X											
			1.2	Insulated Translucent Fiberglass		X										X										
				Skylight System																						
			1.2	Test Reports						X					X											
			1.2	Calculations						X						X										
			1.2	Translucent panels								X				X										
			1.2	Coated finishes								X				X										

SUBMITTAL REGISTER
(ER 415 1-10)

CONTRACT NO.

TITLE AND LOCATION
C-17 Squad Ops/AMU Facility, McChord AFB, WA

CONTRACTOR

SPECIFICATION SECTION
09250

ACTIVITY NO. a.	TRANS-MITTAL NO. b.	ITEM NO c.	SPECIFICATION PARAGRAPH NUMBER d.	DESCRIPTION OF ITEM SUBMITTED e.	TYPE OF SUBMITTAL: DATA f.	DRAWINGS g.	INSTRUCTIONS h.	SCHEDULES i.	STATEMENTS j.	REPORTS k.	CERTIFICATES l.	SAMPLES m.	RECORDS n.	O&M MANUALS o.	CLASSIFICATION: INFORMATION ONLY p.	GOVERNMENT APPROVED q.	REVIEWER r.	CONTRACTOR SCHEDULE DATES: SUBMIT s.	APPROVAL NEEDED BY t.	MATERIAL NEEDED BY u.	CONTRACTOR ACTION: CODE v.	DATE w.	SUBMIT TO GOVERN-MENT x.	GOVERNMENT ACTION: CODE y.	DATE z.	REMARKS aa.
			1.3	Steel Framing		X									X											
			1.3	Control Joints		X									X											
			3.7	Fire-Resistant Assemblies		X									X											
			1.3	Gypsum Wallboard							X				X											
			1.3	Steel Framing							X				X											
			2.4.2	Fire-Rated Gypsum Board							X				X											

SUBMITTAL REGISTER
(ER 415 1-10)

CONTRACT NO.

TITLE AND LOCATION
C-17 Squad Ops/AMU Facility, McChord AFB, WA

CONTRACTOR

SPECIFICATION SECTION
09310

ACTIVITY NO. a.	TRANS-MITTAL NO. b.	ITEM NO c.	SPECIFICATION PARAGRAPH NUMBER d.	DESCRIPTION OF ITEM SUBMITTED e.	TYPE OF SUBMITTAL: DATA f.	DRAWINGS g.	INSTRUCTIONS h.	SCHEDULES i.	STATEMENTS j.	REPORTS k.	CERTIFICATES l.	SAMPLES m.	RECORDS n.	O&M MANUALS o.	CLASSIFICATION: INFORMATION ONLY p.	GOVERNMENT APPROVED q.	REVIEWER r.	CONTRACTOR SCHEDULE DATES: SUBMIT s.	APPROVAL NEEDED BY t.	MATERIAL NEEDED BY u.	CONTRACTOR ACTION: CODE v.	DATE w.	SUBMIT TO GOVERN-MENT x.	GOVERNMENT ACTION: CODE y.	DATE z.	REMARKS aa.
			2.1	Tile	X										X											
			2.4	Mortar, Grout, and Adhesive	X										X											
			2.1	Tile			X								X											
			1.2	Mortar and Grout			X								X											
			2.1	Tile							X				X											
			2.4	Mortar, Grout and Adhesive							X				X											
			2.1	Tile								X				X										
			1.2	Accessories								X				X										
			2.5	Marble Thresholds								X				X										

SUBMITTAL REGISTER
(ER 415 1-10)

CONTRACT NO.

TITLE AND LOCATION
C-17 Squad Ops/AMU Facility, McChord AFB, WA

CONTRACTOR

SPECIFICATION SECTION
09510

ACTIVITY NO. a.	TRANS-MITTAL NO. b.	ITEM NO c.	SPECIFICATION PARAGRAPH NUMBER d.	DESCRIPTION OF ITEM SUBMITTED e.	TYPE OF SUBMITTAL: DATA f.	DRAWINGS g.	INSTRUCTIONS h.	SCHEDULES i.	STATEMENTS j.	REPORTS k.	CERTIFICATES l.	SAMPLES m.	RECORDS n.	O&M MANUALS o.	CLASSIFICATION: INFORMATION ONLY p.	GOVERNMENT APPROVED q.	REVIEWER r.	CONTRACTOR SCHEDULE DATES: SUBMIT s.	APPROVAL NEEDED BY t.	MATERIAL NEEDED BY u.	CONTRACTOR ACTION: CODE v.	DATE w.	SUBMIT TO GOVERN-MENT x.	GOVERNMENT ACTION: CODE y.	DATE z.	REMARKS aa.
			1.3	Acoustical Ceiling System	X										X											
			1.3	Acoustical Ceiling System		X										X										
			1.3	Ceiling Sound Transmission Class							X				X											
				and Test																						
			2.1	Acoustical Units								X			X											

SUBMITTAL REGISTER
(ER 415 1-10)

CONTRACT NO.

TITLE AND LOCATION
C-17 Squad Ops/AMU Facility, McChord AFB, WA

CONTRACTOR

SPECIFICATION SECTION
09650

ACTIVITY NO. a.	TRANS-MITTAL NO. b.	ITEM NO c.	SPECIFICATION PARAGRAPH NUMBER d.	DESCRIPTION OF ITEM SUBMITTED e.	TYPE OF SUBMITTAL: DATA f.	DRAWINGS g.	INSTRUCTIONS h.	SCHEDULES i.	STATEMENTS j.	REPORTS k.	CERTIFICATES l.	SAMPLES m.	RECORDS n.	O&M MANUALS o.	CLASSIFICATION: INFORMATION ONLY p.	GOVERNMENT APPROVED q.	REVIEWER r.	CONTRACTOR SCHEDULE DATES: SUBMIT s.	APPROVAL NEEDED BY t.	MATERIAL NEEDED BY u.	CONTRACTOR ACTION: CODE v.	DATE w.	SUBMIT TO GOVERN-MENT x.	GOVERNMENT ACTION: CODE y.	DATE z.	REMARKS aa.
			1.2	Resilient Flooring and Accessories	X										X											
			1.2	Resilient Flooring and Accessories						X					X											
			1.2	Resilient Flooring and Accessories								X				X										
			1.2	Mats								X				X										

SUBMITTAL REGISTER
(ER 415 1-10)

CONTRACT NO.

TITLE AND LOCATION
C-17 Squad Ops/AMU Facility, McChord AFB, WA

CONTRACTOR

SPECIFICATION SECTION
09680

ACTIVITY NO. a.	TRANS-MITTAL NO. b.	ITEM NO c.	SPECIFICATION PARAGRAPH NUMBER d.	DESCRIPTION OF ITEM SUBMITTED e.	TYPE OF SUBMITTAL: DATA f.	DRAWINGS g.	INSTRUCTIONS h.	SCHEDULES i.	STATEMENTS j.	REPORTS k.	CERTIFICATES l.	SAMPLES m.	RECORDS n.	O&M MANUALS o.	CLASSIFICATION: INFORMATION ONLY p.	GOVERNMENT APPROVED q.	REVIEWER r.	CONTRACTOR SCHEDULE DATES: SUBMIT s.	APPROVAL NEEDED BY t.	MATERIAL NEEDED BY u.	CONTRACTOR ACTION: CODE v.	DATE w.	SUBMIT TO GOVERN-MENT x.	GOVERNMENT ACTION: CODE y.	DATE z.	REMARKS aa.
			1.2	Carpet and Accessories	X										X											
			3.4	Installation		X										X										
			1.2	Carpet and Accessories			X								X											
			1.2	Moisture and Alkalinity Tests						X						X										
			1.2	Carpet and Accessories							X				X											
			1.2	Carpet and Accessories								X				X										
			1.2	Carpet and Accessories										X	X											

SUBMITTAL REGISTER
(ER 415 1-10)

CONTRACT NO.

TITLE AND LOCATION
C-17 Squad Ops/AMU Facility, McChord AFB, WA

CONTRACTOR

SPECIFICATION SECTION
09900

ACTIVITY NO. a.	TRANS-MITTAL NO. b.	ITEM NO c.	SPECIFICATION PARAGRAPH NUMBER d.	DESCRIPTION OF ITEM SUBMITTED e.	TYPE OF SUBMITTAL: DATA f.	DRAWINGS g.	INSTRUCTIONS h.	SCHEDULES i.	STATEMENTS j.	REPORTS k.	CERTIFICATES l.	SAMPLES m.	RECORDS n.	O&M MANUALS o.	CLASSIFICATION: INFORMATION ONLY p.	GOVERNMENT APPROVED q.	REVIEWER r.	CONTRACTOR SCHEDULE DATES: SUBMIT s.	APPROVAL NEEDED BY t.	MATERIAL NEEDED BY u.	CONTRACTOR ACTION: CODE v.	DATE w.	SUBMIT TO GOVERN-MENT x.	GOVERNMENT ACTION: CODE y.	DATE z.	REMARKS aa.
			2.1	Paint	X											X										
			3.3	Mixing and Thinning			X								X											
			3.4	Application			X								X											
			2.1	Paint						X					X											
			2.1.3	Lead							X				X											
			2.1.2	Mildewcide and Insecticide							X				X											
			2.1.5	Volatile Organic Compound (VOC)							X				X											
				Content																						
			1.2	Moisture-curing Polyurethane								X				X										
			2.1	Paint								X				X										

SUBMITTAL REGISTER
(ER 415 1-10)

CONTRACT NO.

TITLE AND LOCATION
C-17 Squad Ops/AMU Facility, McChord AFB, WA

CONTRACTOR

SPECIFICATION SECTION
09950

ACTIVITY NO. a.	TRANS-MITTAL NO. b.	ITEM NO c.	SPECIFICATION PARAGRAPH NUMBER d.	DESCRIPTION OF ITEM SUBMITTED e.	TYPE OF SUBMITTAL: DATA f.	DRAWINGS g.	INSTRUCTIONS h.	SCHEDULES i.	STATEMENTS j.	REPORTS k.	CERTIFICATES l.	SAMPLES m.	RECORDS n.	O&M MANUALS o.	CLASSIFICATION: INFORMATION ONLY p.	GOVERNMENT APPROVED q.	REVIEWER r.	CONTRACTOR SCHEDULE DATES: SUBMIT s.	APPROVAL NEEDED BY t.	MATERIAL NEEDED BY u.	CONTRACTOR ACTION: CODE v.	DATE w.	SUBMIT TO GOVERN-MENT x.	GOVERNMENT ACTION: CODE y.	DATE z.	REMARKS aa.
			1.2	Wallcovering and Accessories	X										X											
			3.3	Installation			X								X											
			1.2	Maintenance			X								X											
			1.2	Wallcovering							X				X											
			1.2	Wallcovering and Accessories								X				X										

SUBMITTAL REGISTER
(ER 415 1-10)

CONTRACT NO.

TITLE AND LOCATION
C-17 Squad Ops/AMU Facility, McChord AFB, WA

CONTRACTOR

SPECIFICATION SECTION
10160

ACTIVITY NO. a.	TRANS-MITTAL NO. b.	ITEM NO c.	SPECIFICATION PARAGRAPH NUMBER d.	DESCRIPTION OF ITEM SUBMITTED e.	TYPE OF SUBMITTAL: DATA f.	DRAWINGS g.	INSTRUCTIONS h.	SCHEDULES i.	STATEMENTS j.	REPORTS k.	CERTIFICATES l.	SAMPLES m.	RECORDS n.	O&M MANUALS o.	CLASSIFICATION: INFORMATION ONLY p.	GOVERNMENT APPROVED q.	REVIEWER r.	CONTRACTOR SCHEDULE DATES: SUBMIT s.	APPROVAL NEEDED BY t.	MATERIAL NEEDED BY u.	CONTRACTOR ACTION: CODE v.	DATE w.	SUBMIT TO GOVERN-MENT x.	GOVERNMENT ACTION: CODE y.	DATE z.	REMARKS aa.
			1.3	Toilet Partition System	X										X											
			1.3	Toilet Partition System		X										X										
			1.3	Toilet Partition System								X				X										

SUBMITTAL REGISTER
(ER 415 1-10)

CONTRACT NO.

TITLE AND LOCATION
C-17 Squad Ops/AMU Facility, McChord AFB, WA

CONTRACTOR

SPECIFICATION SECTION
10430

ACTIVITY NO. a.	TRANS-MITTAL NO. b.	ITEM NO c.	SPECIFICATION PARAGRAPH NUMBER d.	DESCRIPTION OF ITEM SUBMITTED e.	TYPE OF SUBMITTAL: DATA f.	DRAWINGS g.	INSTRUCTIONS h.	SCHEDULES i.	STATEMENTS j.	REPORTS k.	CERTIFICATES l.	SAMPLES m.	RECORDS n.	O&M MANUALS o.	CLASSIFICATION: INFORMATION ONLY p.	GOVERNMENT APPROVED q.	REVIEWER r.	CONTRACTOR SCHEDULE DATES: SUBMIT s.	APPROVAL NEEDED BY t.	MATERIAL NEEDED BY u.	CONTRACTOR ACTION: CODE v.	DATE w.	SUBMIT TO GOVERN-MENT x.	GOVERNMENT ACTION: CODE y.	DATE z.	REMARKS aa.
			1.3	Exterior Signs	X										X											
			1.3	Exterior Signs		X										X										
			1.3	Exterior Signs			X								X											
			1.3	Exterior Signs								X				X										

SUBMITTAL REGISTER
(ER 415 1-10)

CONTRACT NO.

TITLE AND LOCATION
C-17 Squad Ops/AMU Facility, McChord AFB, WA

CONTRACTOR

SPECIFICATION SECTION
10440

ACTIVITY NO. a.	TRANS-MITTAL NO. b.	ITEM NO c.	SPECIFICATION PARAGRAPH NUMBER d.	DESCRIPTION OF ITEM SUBMITTED e.	TYPE OF SUBMITTAL: DATA f.	DRAWINGS g.	INSTRUCTIONS h.	SCHEDULES i.	STATEMENTS j.	REPORTS k.	CERTIFICATES l.	SAMPLES m.	RECORDS n.	O&M MANUALS o.	CLASSIFICATION: INFORMATION ONLY p.	GOVERNMENT APPROVED q.	REVIEWER r.	CONTRACTOR SCHEDULE DATES: SUBMIT s.	APPROVAL NEEDED BY t.	MATERIAL NEEDED BY u.	CONTRACTOR ACTION: CODE v.	DATE w.	SUBMIT TO GOVERN-MENT x.	GOVERNMENT ACTION: CODE y.	DATE z.	REMARKS aa.
			1.3	Interior Signage	X											X										
			1.3	Interior Signage		X										X										
			1.3	Interior Signage								X				X										

SUBMITTAL REGISTER
(ER 415 1-10)

CONTRACT NO.

TITLE AND LOCATION
C-17 Squad Ops/AMU Facility, McChord AFB, WA

CONTRACTOR

SPECIFICATION SECTION
10505

ACTIVITY NO. a.	TRANS-MITTAL NO. b.	ITEM NO c.	SPECIFICATION PARAGRAPH NUMBER d.	DESCRIPTION OF ITEM SUBMITTED e.	TYPE OF SUBMITTAL: DATA f.	DRAWINGS g.	INSTRUCTIONS h.	SCHEDULES i.	STATEMENTS j.	REPORTS k.	CERTIFICATES l.	SAMPLES m.	RECORDS n.	O&M MANUALS o.	CLASSIFICATION: INFORMATION ONLY p.	GOVERNMENT APPROVED q.	REVIEWER r.	CONTRACTOR SCHEDULE DATES: SUBMIT s.	APPROVAL NEEDED BY t.	MATERIAL NEEDED BY u.	CONTRACTOR ACTION: CODE v.	DATE w.	SUBMIT TO GOVERN-MENT x.	GOVERNMENT ACTION: CODE y.	DATE z.	REMARKS aa.
			1.4	Locker Units		X									X											
			1.4	Static Load Tests						X					X											
			1.4	Locker Units								X				X										
			1.4	Metal Finishes								X				X										

SUBMITTAL REGISTER
(ER 415 1-10)

CONTRACT NO.

TITLE AND LOCATION
C-17 Squad Ops/AMU Facility, McChord AFB, WA

CONTRACTOR

SPECIFICATION SECTION
10520

ACTIVITY NO. a.	TRANS-MITTAL NO. b.	ITEM NO c.	SPECIFICATION PARAGRAPH NUMBER d.	DESCRIPTION OF ITEM SUBMITTED e.	TYPE OF SUBMITTAL: DATA f.	DRAWINGS g.	INSTRUCTIONS h.	SCHEDULES i.	STATEMENTS j.	REPORTS k.	CERTIFICATES l.	SAMPLES m.	RECORDS n.	O&M MANUALS o.	CLASSIFICATION: INFORMATION ONLY p.	GOVERNMENT APPROVED q.	REVIEWER r.	CONTRACTOR SCHEDULE DATES: SUBMIT s.	APPROVAL NEEDED BY t.	MATERIAL NEEDED BY u.	CONTRACTOR ACTION: CODE v.	DATE w.	SUBMIT TO GOVERN-MENT x.	GOVERNMENT ACTION: CODE y.	DATE z.	REMARKS aa.
			1.3	Manufacturer's standard product	X										X											
				literature and recommendations for																						
				installation.																						

SUBMITTAL REGISTER
(ER 415 1-10)

CONTRACT NO.

TITLE AND LOCATION
C-17 Squad Ops/AMU Facility, McChord AFB, WA

CONTRACTOR

SPECIFICATION SECTION
10800

ACTIVITY NO. a.	TRANS-MITTAL NO. b.	ITEM NO c.	SPECIFICATION PARAGRAPH NUMBER d.	DESCRIPTION OF ITEM SUBMITTED e.	TYPE OF SUBMITTAL: DATA f.	DRAWINGS g.	INSTRUCTIONS h.	SCHEDULES i.	STATEMENTS j.	REPORTS k.	CERTIFICATES l.	SAMPLES m.	RECORDS n.	O&M MANUALS o.	CLASSIFICATION: INFORMATION ONLY p.	GOVERNMENT APPROVED q.	REVIEWER r.	CONTRACTOR SCHEDULE DATES: SUBMIT s.	APPROVAL NEEDED BY t.	MATERIAL NEEDED BY u.	CONTRACTOR ACTION: CODE v.	DATE w.	SUBMIT TO GOVERN-MENT x.	GOVERNMENT ACTION: CODE y.	DATE z.	REMARKS aa.
			2.1.2	Finishes	X										X											
			2.2	Accessory Items	X										X											
			2.1.2	Finishes								X				X										
			2.2	Accessory Items								X				X										

SUBMITTAL REGISTER
(ER 415 1-10)

CONTRACT NO.

TITLE AND LOCATION
C-17 Squad Ops/AMU Facility, McChord AFB, WA

CONTRACTOR

SPECIFICATION SECTION
11132

ACTIVITY NO. a.	TRANS-MITTAL NO. b.	ITEM NO c.	SPECIFICATION PARAGRAPH NUMBER d.	DESCRIPTION OF ITEM SUBMITTED e.	TYPE OF SUBMITTAL: DATA f.	DRAWINGS g.	INSTRUCTIONS h.	SCHEDULES i.	STATEMENTS j.	REPORTS k.	CERTIFICATES l.	SAMPLES m.	RECORDS n.	O&M MANUALS o.	CLASSIFICATION: INFORMATION ONLY p.	GOVERNMENT APPROVED q.	REVIEWER r.	CONTRACTOR SCHEDULE DATES: SUBMIT s.	APPROVAL NEEDED BY t.	MATERIAL NEEDED BY u.	CONTRACTOR ACTION: CODE v.	DATE w.	SUBMIT TO GOVERN-MENT x.	GOVERNMENT ACTION: CODE y.	DATE z.	REMARKS aa.
			1.3	Submit manufacturers product data	X																					
				for screen indicated.																						
			1.3	Submit manufacturer's wiring		X																				
				diagram for electrically-operated unit.																						

SUBMITTAL REGISTER
(ER 415 1-10)

CONTRACT NO.

TITLE AND LOCATION
C-17 Squad Ops/AMU Facility, McChord AFB, WA

CONTRACTOR

SPECIFICATION SECTION
12390

ACTIVITY NO. a.	TRANS-MITTAL NO. b.	ITEM NO c.	SPECIFICATION PARAGRAPH NUMBER d.	DESCRIPTION OF ITEM SUBMITTED e.	TYPE OF SUBMITTAL: DATA f.	DRAWINGS g.	INSTRUCTIONS h.	SCHEDULES i.	STATEMENTS j.	REPORTS k.	CERTIFICATES l.	SAMPLES m.	RECORDS n.	O&M MANUALS o.	CLASSIFICATION: INFORMATION ONLY p.	GOVERNMENT APPROVED q.	REVIEWER r.	CONTRACTOR SCHEDULE DATES: SUBMIT s.	APPROVAL NEEDED BY t.	MATERIAL NEEDED BY u.	CONTRACTOR ACTION: CODE v.	DATE w.	SUBMIT TO GOVERN-MENT x.	GOVERNMENT ACTION: CODE y.	DATE z.	REMARKS aa.
			1.3	Cabinets and Countertops	X											X										
			1.3	Cabinets and Countertops		X										X										
			1.3	Cabinets and Countertops						X						X										
			1.3	Cabinets and Countertops								X				X										

SUBMITTAL REGISTER
(ER 415 1-10)

CONTRACT NO.

TITLE AND LOCATION
C-17 Squad Ops/AMU Facility, McChord AFB, WA

CONTRACTOR

SPECIFICATION SECTION
12520

ACTIVITY NO. a.	TRANS-MITTAL NO. b.	ITEM NO c.	SPECIFICATION PARAGRAPH NUMBER d.	DESCRIPTION OF ITEM SUBMITTED e.	TYPE OF SUBMITTAL: DATA f.	DRAWINGS g.	INSTRUCTIONS h.	SCHEDULES i.	STATEMENTS j.	REPORTS k.	CERTIFICATES l.	SAMPLES m.	RECORDS n.	O&M MANUALS o.	CLASSIFICATION: INFORMATION ONLY p.	GOVERNMENT APPROVED q.	REVIEWER r.	CONTRACTOR SCHEDULE DATES: SUBMIT s.	APPROVAL NEEDED BY t.	MATERIAL NEEDED BY u.	CONTRACTOR ACTION: CODE v.	DATE w.	SUBMIT TO GOVERN-MENT x.	GOVERNMENT ACTION: CODE y.	DATE z.	REMARKS aa.
			1.3	Window Treatments and Hardware	X										X											
			1.3	Window Treatments and Hardware		X										X										
			1.3	Window Treatments and Hardware								X				X										

SUBMITTAL REGISTER
(ER 415 1-10)

CONTRACT NO.

TITLE AND LOCATION
C-17 Squad Ops/AMU Facility, McChord AFB, WA

CONTRACTOR

SPECIFICATION SECTION
12675

ACTIVITY NO. a.	TRANS-MITTAL NO. b.	ITEM NO c.	SPECIFICATION PARAGRAPH NUMBER d.	DESCRIPTION OF ITEM SUBMITTED e.	TYPE OF SUBMITTAL: DATA f.	DRAWINGS g.	INSTRUCTIONS h.	SCHEDULES i.	STATEMENTS j.	REPORTS k.	CERTIFICATES l.	SAMPLES m.	RECORDS n.	O&M MANUALS o.	CLASSIFICATION: INFORMATION ONLY p.	GOVERNMENT APPROVED q.	REVIEWER r.	CONTRACTOR SCHEDULE DATES: SUBMIT s.	APPROVAL NEEDED BY t.	MATERIAL NEEDED BY u.	CONTRACTOR ACTION: CODE v.	DATE w.	SUBMIT TO GOVERN-MENT x.	GOVERNMENT ACTION: CODE y.	DATE z.	REMARKS aa.
			1.2	Mat								X				X										

SUBMITTAL REGISTER
(ER 415 1-10)

CONTRACT NO.

TITLE AND LOCATION
C-17 Squad Ops/AMU Facility, McChord AFB, WA

CONTRACTOR

SPECIFICATION SECTION
12705

ACTIVITY NO. a.	TRANS-MITTAL NO. b.	ITEM NO c.	SPECIFICATION PARAGRAPH NUMBER d.	DESCRIPTION OF ITEM SUBMITTED e.	TYPE OF SUBMITTAL: DATA f.	DRAWINGS g.	INSTRUCTIONS h.	SCHEDULES i.	STATEMENTS j.	REPORTS k.	CERTIFICATES l.	SAMPLES m.	RECORDS n.	O&M MANUALS o.	CLASSIFICATION: INFORMATION ONLY p.	GOVERNMENT APPROVED q.	REVIEWER r.	CONTRACTOR SCHEDULE DATES: SUBMIT s.	APPROVAL NEEDED BY t.	MATERIAL NEEDED BY u.	CONTRACTOR ACTION: CODE v.	DATE w.	SUBMIT TO GOVERN-MENT x.	GOVERNMENT ACTION: CODE y.	DATE z.	REMARKS aa.
			1.3	Manufacturer's Product Data	X											X										
			1.3	Prewired Workstations		X										X										
			1.3	Parts List				X							X											
			1.3	Qualifications					X						X											
			1.3	Selected Components						X						X										
			1.3	Core Unit Acoustics						X						X										
			2.3	Fire Safety						X						X										
			2.5	Electrical System						X						X										
			1.3	Certificate of Compliance							X				X											
			1.7	Warranty							X					X										
			1.3	Prewired Workstations								X				X										
			1.3	Product Assembly Manual										X	X											
			1.3	Product Maintenance Manuals										X	X											
			1.3	Electrical Systems Manual										X	X											

SUBMITTAL REGISTER
(ER 415 1-10)

CONTRACT NO.

TITLE AND LOCATION
C-17 Squad Ops/AMU Facility, McChord AFB, WA

CONTRACTOR

SPECIFICATION SECTION
12710

ACTIVITY NO. a.	TRANS-MITTAL NO. b.	ITEM NO c.	SPECIFICATION PARAGRAPH NUMBER d.	DESCRIPTION OF ITEM SUBMITTED e.	TYPE OF SUBMITTAL: DATA f.	DRAWINGS g.	INSTRUCTIONS h.	SCHEDULES i.	STATEMENTS j.	REPORTS k.	CERTIFICATES l.	SAMPLES m.	RECORDS n.	O&M MANUALS o.	CLASSIFICATION: INFORMATION ONLY p.	GOVERNMENT APPROVED q.	REVIEWER r.	CONTRACTOR SCHEDULE DATES: SUBMIT s.	APPROVAL NEEDED BY t.	MATERIAL NEEDED BY u.	CONTRACTOR ACTION: CODE v.	DATE w.	SUBMIT TO GOVERN-MENT x.	GOVERNMENT ACTION: CODE y.	DATE z.	REMARKS aa.
			1.2	Theater Chairs	X										X											
			1.2	Theater Chairs		X										X										
			1.2	Theater Chairs								X				X										

SUBMITTAL REGISTER
(ER 415 1-10)

CONTRACT NO.

TITLE AND LOCATION
C-17 Squad Ops/AMU Facility, McChord AFB, WA

CONTRACTOR

SPECIFICATION SECTION
14240

ACTIVITY NO. a.	TRANS-MITTAL NO. b.	ITEM NO c.	SPECIFICATION PARAGRAPH NUMBER d.	DESCRIPTION OF ITEM SUBMITTED e.	TYPE OF SUBMITTAL: DATA f.	DRAWINGS g.	INSTRUCTIONS h.	SCHEDULES i.	STATEMENTS j.	REPORTS k.	CERTIFICATES l.	SAMPLES m.	RECORDS n.	O&M MANUALS o.	CLASSIFICATION: INFORMATION ONLY p.	GOVERNMENT APPROVED q.	REVIEWER r.	CONTRACTOR SCHEDULE DATES: SUBMIT s.	APPROVAL NEEDED BY t.	MATERIAL NEEDED BY u.	CONTRACTOR ACTION: CODE v.	DATE w.	SUBMIT TO GOVERN-MENT x.	GOVERNMENT ACTION: CODE y.	DATE z.	REMARKS aa.
			1.2	Training Data	X										X											
			1.2	Elevator System	X											X										
			1.2	Elevator System		X										X										
			3.7	Framed Instructions			X								X											
			1.2	Qualification Certificates					X						X											
			3.6	Testing						X					X											
			1.2	Finishes								X				X										
			1.2	Test Procedures									X			X										
			1.2	Elevator System										X		X										

SUBMITTAL REGISTER
(ER 415 1-10)

CONTRACT NO.

TITLE AND LOCATION
C-17 Squad Ops/AMU Facility, McChord AFB, WA

CONTRACTOR

SPECIFICATION SECTION
15250

ACTIVITY NO. a.	TRANS-MITTAL NO. b.	ITEM NO c.	SPECIFICATION PARAGRAPH NUMBER d.	DESCRIPTION OF ITEM SUBMITTED e.	TYPE OF SUBMITTAL: DATA f.	DRAWINGS g.	INSTRUCTIONS h.	SCHEDULES i.	STATEMENTS j.	REPORTS k.	CERTIFICATES l.	SAMPLES m.	RECORDS n.	O&M MANUALS o.	CLASSIFICATION: INFORMATION ONLY p.	GOVERNMENT APPROVED q.	REVIEWER r.	CONTRACTOR SCHEDULE DATES: SUBMIT s.	APPROVAL NEEDED BY t.	MATERIAL NEEDED BY u.	CONTRACTOR ACTION: CODE v.	DATE w.	SUBMIT TO GOVERN-MENT x.	GOVERNMENT ACTION: CODE y.	DATE z.	REMARKS aa.
			1.4	Thermal Insulation Materials	X										X											
			1.4	Thermal Insulation Materials								X			X											
			1.4	Thermal Insulation Materials									X		X											

SUBMITTAL REGISTER
(ER 415 1-10)

CONTRACT NO.

TITLE AND LOCATION
C-17 Squad Ops/AMU Facility, McChord AFB, WA

CONTRACTOR

SPECIFICATION SECTION
15330

ACTIVITY NO. a.	TRANS-MITTAL NO. b.	ITEM NO c.	SPECIFICATION PARAGRAPH NUMBER d.	DESCRIPTION OF ITEM SUBMITTED e.	TYPE OF SUBMITTAL: DATA f.	DRAWINGS g.	INSTRUCTIONS h.	SCHEDULES i.	STATEMENTS j.	REPORTS k.	CERTIFICATES l.	SAMPLES m.	RECORDS n.	O&M MANUALS o.	CLASSIFICATION: INFORMATION ONLY p.	GOVERNMENT APPROVED q.	REVIEWER r.	CONTRACTOR SCHEDULE DATES: SUBMIT s.	APPROVAL NEEDED BY t.	MATERIAL NEEDED BY u.	CONTRACTOR ACTION: CODE v.	DATE w.	SUBMIT TO GOVERN-MENT x.	GOVERNMENT ACTION: CODE y.	DATE z.	REMARKS aa.
			1.3	Sprinkler System Equipment	X										X											
			1.4	Hydraulic Calculations	X											X										
			1.3	Spare Parts	X										X											
			1.3	Sprinkler System Shop Drawings		X										X										
			1.3	As-Built Drawings		X									X											
			1.3	Test Procedures			X								X											
			1.3	Preliminary Tests				X							X											
			1.3	Final Test				X							X											
			1.6	Installer Qualifications					X						X											
			1.5	Submittal Preparer's Qualifications					X						X											
			1.3	Contractor's Material & Test							X				X											
				Certificates																						
			1.3	Sprinkler System										X	X											

SUBMITTAL REGISTER
(ER 415 1-10)

CONTRACT NO.

TITLE AND LOCATION
C-17 Squad Ops/AMU Facility, McChord AFB, WA

CONTRACTOR

SPECIFICATION SECTION
15400

ACTIVITY NO. a.	TRANS-MITTAL NO. b.	ITEM NO c.	SPECIFICATION PARAGRAPH NUMBER d.	DESCRIPTION OF ITEM SUBMITTED e.	TYPE OF SUBMITTAL: DATA f.	DRAWINGS g.	INSTRUCTIONS h.	SCHEDULES i.	STATEMENTS j.	REPORTS k.	CERTIFICATES l.	SAMPLES m.	RECORDS n.	O&M MANUALS o.	CLASSIFICATION: INFORMATION ONLY p.	GOVERNMENT APPROVED q.	REVIEWER r.	CONTRACTOR SCHEDULE DATES: SUBMIT s.	APPROVAL NEEDED BY t.	MATERIAL NEEDED BY u.	CONTRACTOR ACTION: CODE v.	DATE w.	SUBMIT TO GOVERN-MENT x.	GOVERNMENT ACTION: CODE y.	DATE z.	REMARKS aa.
			1.5	Product Data	X										X											
			1.5	Plumbing System			X								X											
			3.7	Tests, Flushing and Sterilization						X					X											
			1.5	Materials and Equipment							X				X											
			1.5	Plumbing System										X	X											

SUBMITTAL REGISTER
(ER 415 1-10)

CONTRACT NO.

TITLE AND LOCATION
C-17 Squad Ops/AMU Facility, McChord AFB, WA

CONTRACTOR

SPECIFICATION SECTION
15488

ACTIVITY NO. a.	TRANS-MITTAL NO. b.	ITEM NO c.	SPECIFICATION PARAGRAPH NUMBER d.	DESCRIPTION OF ITEM SUBMITTED e.	TYPE OF SUBMITTAL: DATA f.	DRAWINGS g.	INSTRUCTIONS h.	SCHEDULES i.	STATEMENTS j.	REPORTS k.	CERTIFICATES l.	SAMPLES m.	RECORDS n.	O&M MANUALS o.	CLASSIFICATION: INFORMATION ONLY p.	GOVERNMENT APPROVED q.	REVIEWER r.	CONTRACTOR SCHEDULE DATES: SUBMIT s.	APPROVAL NEEDED BY t.	MATERIAL NEEDED BY u.	CONTRACTOR ACTION: CODE v.	DATE w.	SUBMIT TO GOVERN-MENT x.	GOVERNMENT ACTION: CODE y.	DATE z.	REMARKS aa.
			1.3	Qualifications	X										X											
			1.3	Gas Piping System		X									X											

SUBMITTAL REGISTER
(ER 415 1-10)

CONTRACT NO.

TITLE AND LOCATION
C-17 Squad Ops/AMU Facility, McChord AFB, WA

CONTRACTOR

SPECIFICATION SECTION
15556

ACTIVITY NO. a.	TRANS-MITTAL NO. b.	ITEM NO c.	SPECIFICATION PARAGRAPH NUMBER d.	DESCRIPTION OF ITEM SUBMITTED e.	TYPE OF SUBMITTAL: DATA f.	DRAWINGS g.	INSTRUCTIONS h.	SCHEDULES i.	STATEMENTS j.	REPORTS k.	CERTIFICATES l.	SAMPLES m.	RECORDS n.	O&M MANUALS o.	CLASSIFICATION: INFORMATION ONLY p.	GOVERNMENT APPROVED q.	REVIEWER r.	CONTRACTOR SCHEDULE DATES: SUBMIT s.	APPROVAL NEEDED BY t.	MATERIAL NEEDED BY u.	CONTRACTOR ACTION: CODE v.	DATE w.	SUBMIT TO GOVERN-MENT x.	GOVERNMENT ACTION: CODE y.	DATE z.	REMARKS aa.
			1.2	Spare Parts	X										X											
			1.2	Welding Procedures	X										X											
			1.2	Welding Procedures and	X										X											
				Qualifications																						
			1.2	Piping System		X									X											
			3.18	Framed Instructions			X								X											
			1.2	Performance Tests						X					X											
			1.2	Water Treatment Tests						X					X											
			1.2	Bolts							X				X											
			1.2	Heating and Chilled Water System										X	X											

SUBMITTAL REGISTER
(ER 415 1-10)

CONTRACT NO.

TITLE AND LOCATION
C-17 Squad Ops/AMU Facility, McChord AFB, WA

CONTRACTOR

SPECIFICATION SECTION
15569

ACTIVITY NO. a.	TRANS-MITTAL NO. b.	ITEM NO c.	SPECIFICATION PARAGRAPH NUMBER d.	DESCRIPTION OF ITEM SUBMITTED e.	TYPE OF SUBMITTAL: DATA f.	DRAWINGS g.	INSTRUCTIONS h.	SCHEDULES i.	STATEMENTS j.	REPORTS k.	CERTIFICATES l.	SAMPLES m.	RECORDS n.	O&M MANUALS o.	CLASSIFICATION: INFORMATION ONLY p.	GOVERNMENT APPROVED q.	REVIEWER r.	CONTRACTOR SCHEDULE DATES: SUBMIT s.	APPROVAL NEEDED BY t.	MATERIAL NEEDED BY u.	CONTRACTOR ACTION: CODE v.	DATE w.	SUBMIT TO GOVERN-MENT x.	GOVERNMENT ACTION: CODE y.	DATE z.	REMARKS aa.
			1.3	Manufacturer's Catalog Data	X										X											
			1.3	Spare Parts Data	X										X											
			1.3	Heating and Fuel Systems Test	X										X											
				Procedures																						
			1.3	Welding Procedures	X										X											
			1.3	Qualification	X										X											
			1.3	Welding Qualification	X										X											
			1.3	Heating System		X									X											
			1.3	Posted Instructions			X								X											
			1.3	Tests				X							X											
			1.3	Heating System and Fuel System						X					X											
				Tests																						
			1.3	Bolts							X				X											
			1.3	Boiler Emissions							X				X											
			1.3	Heating System										X	X											

SUBMITTAL REGISTER
(ER 415 1-10)

CONTRACT NO.

TITLE AND LOCATION
C-17 Squad Ops/AMU Facility, McChord AFB, WA

CONTRACTOR

SPECIFICATION SECTION
15650

ACTIVITY NO. a.	TRANS-MITTAL NO. b.	ITEM NO. c.	SPECIFICATION PARAGRAPH NUMBER d.	DESCRIPTION OF ITEM SUBMITTED e.	TYPE OF SUBMITTAL: DATA f.	DRAWINGS g.	INSTRUCTIONS h.	SCHEDULES i.	STATEMENTS j.	REPORTS k.	CERTIFICATES l.	SAMPLES m.	RECORDS n.	O&M MANUALS o.	CLASSIFICATION: INFORMATION ONLY p.	GOVERNMENT APPROVED q.	REVIEWER r.	CONTRACTOR SCHEDULE DATES: SUBMIT s.	APPROVAL NEEDED BY t.	MATERIAL NEEDED BY u.	CONTRACTOR ACTION: CODE v.	DATE w.	SUBMIT TO GOVERN-MENT x.	GOVERNMENT ACTION: CODE y.	DATE z.	REMARKS aa.
			1.3	Central Refrigerated Air-Conditioning	X										X											
				System																						
			1.3	Spare Parts	X										X											
			1.3	Posted Instructions			X								X											
			1.3	Tests				X							X											
			3.3	Demonstrations				X							X											
			1.3	Central Refrigerated Air-Conditioning							X				X											
				System																						
			1.3	Operation Manual										X	X											
			1.3	Maintenance Manual										X	X											

SUBMITTAL REGISTER
(ER 415 1-10)

CONTRACT NO.

TITLE AND LOCATION
C-17 Squad Ops/AMU Facility, McChord AFB, WA

CONTRACTOR

SPECIFICATION SECTION
15895

ACTIVITY NO. a.	TRANS-MITTAL NO. b.	ITEM NO c.	SPECIFICATION PARAGRAPH NUMBER d.	DESCRIPTION OF ITEM SUBMITTED e.	TYPE OF SUBMITTAL: DATA f.	DRAWINGS g.	INSTRUCTIONS h.	SCHEDULES i.	STATEMENTS j.	REPORTS k.	CERTIFICATES l.	SAMPLES m.	RECORDS n.	O&M MANUALS o.	CLASSIFICATION: INFORMATION ONLY p.	GOVERNMENT APPROVED q.	REVIEWER r.	CONTRACTOR SCHEDULE DATES: SUBMIT s.	APPROVAL NEEDED BY t.	MATERIAL NEEDED BY u.	CONTRACTOR ACTION: CODE v.	DATE w.	SUBMIT TO GOVERN-MENT x.	GOVERNMENT ACTION: CODE y.	DATE z.	REMARKS aa.
			1.4	Components and Equipment Data	X										X											
			1.4	Air Supply, Distribution, Ventilation,		X									X											
				and Exhaust Equipment																						
			1.4	Test Procedures			X								X											
			1.4	System Diagrams			X								X											
			1.4	Test Schedules				X							X											
			1.4	Field Training Schedule				X							X											
			1.4	Similar Services					X						X											
			1.4	Test Reports						X					X											
			1.4	Air Supply, Distribution, Ventilation,										X	X											
				and Exhaust Manuals																						

SUBMITTAL REGISTER
(ER 415 1-10)

CONTRACT NO.

TITLE AND LOCATION
C-17 Squad Ops/AMU Facility, McChord AFB, WA

CONTRACTOR

SPECIFICATION SECTION
15951

ACTIVITY NO. a.	TRANS-MITTAL NO. b.	ITEM NO c.	SPECIFICATION PARAGRAPH NUMBER d.	DESCRIPTION OF ITEM SUBMITTED e.	TYPE OF SUBMITTAL: DATA f.	DRAWINGS g.	INSTRUCTIONS h.	SCHEDULES i.	STATEMENTS j.	REPORTS k.	CERTIFICATES l.	SAMPLES m.	RECORDS n.	O&M MANUALS o.	CLASSIFICATION: INFORMATION ONLY p.	GOVERNMENT APPROVED q.	REVIEWER r.	CONTRACTOR SCHEDULE DATES: SUBMIT s.	APPROVAL NEEDED BY t.	MATERIAL NEEDED BY u.	CONTRACTOR ACTION: CODE v.	DATE w.	SUBMIT TO GOVERN-MENT x.	GOVERNMENT ACTION: CODE y.	DATE z.	REMARKS aa.
			1.3	Training Data	X											X										
			1.3	Preliminary Data	X											X										
			1.3	Performance Verification Testing and					X						X											
				Acceptance Testing																						
			1.3	Commissioning Procedures					X						X											
			1.3	System's Calibration, Adjustments,					X																	
				and Commissioning																						
			1.3	Test Reports						X					X											
			1.3	Performance Verification and						X					X											
				Acceptance Report																						
			1.3	Certificate of Compliance							X					X										
			1.3	Operation and Maintenance Manuals										X		X										
			1.3	Software Manuals										X		X										
			1.3	Operator's Manuals										X		X										
			1.3	Maintenance Manual and As-Built										X		X										
				Drawings																						

SUBMITTAL REGISTER
(ER 415 1-10)

CONTRACT NO.

TITLE AND LOCATION
C-17 Squad Ops/AMU Facility, McChord AFB, WA

CONTRACTOR

SPECIFICATION SECTION
15990

ACTIVITY NO. a.	TRANS-MITTAL NO. b.	ITEM NO c.	SPECIFICATION PARAGRAPH NUMBER d.	DESCRIPTION OF ITEM SUBMITTED e.	TYPE OF SUBMITTAL: DATA f.	DRAWINGS g.	INSTRUCTIONS h.	SCHEDULES i.	STATEMENTS j.	REPORTS k.	CERTIFICATES l.	SAMPLES m.	RECORDS n.	O&M MANUALS o.	CLASSIFICATION: INFORMATION ONLY p.	GOVERNMENT APPROVED q.	REVIEWER r.	CONTRACTOR SCHEDULE DATES: SUBMIT s.	APPROVAL NEEDED BY t.	MATERIAL NEEDED BY u.	CONTRACTOR ACTION: CODE v.	DATE w.	SUBMIT TO GOVERN-MENT x.	GOVERNMENT ACTION: CODE y.	DATE z.	REMARKS aa.
			3.1	Testing and Balancing						X						X										
			1.4	Qualification							X					X										

SUBMITTAL REGISTER
(ER 415 1-10)

CONTRACT NO.

TITLE AND LOCATION
C-17 Squad Ops/AMU Facility, McChord AFB, WA

CONTRACTOR

SPECIFICATION SECTION
15995

ACTIVITY NO. a.	TRANS-MITTAL NO. b.	ITEM NO c.	SPECIFICATION PARAGRAPH NUMBER d.	DESCRIPTION OF ITEM SUBMITTED e.	TYPE OF SUBMITTAL: DATA f.	DRAWINGS g.	INSTRUCTIONS h.	SCHEDULES i.	STATEMENTS j.	REPORTS k.	CERTIFICATES l.	SAMPLES m.	RECORDS n.	O&M MANUALS o.	CLASSIFICATION: INFORMATION ONLY p.	GOVERNMENT APPROVED q.	REVIEWER r.	CONTRACTOR SCHEDULE DATES: SUBMIT s.	APPROVAL NEEDED BY t.	MATERIAL NEEDED BY u.	CONTRACTOR ACTION: CODE v.	DATE w.	SUBMIT TO GOVERN-MENT x.	GOVERNMENT ACTION: CODE y.	DATE z.	REMARKS aa.
			1.1	Commissioning Team	X											X										
			1.1	Test Procedures			X									X										
			1.1	Test Schedule				X								X										
			1.1	Test Reports						X						X										

SUBMITTAL REGISTER
(ER 415 1-10)

CONTRACT NO.

TITLE AND LOCATION
C-17 Squad Ops/AMU Facility, McChord AFB, WA

CONTRACTOR

SPECIFICATION SECTION
16370

ACTIVITY NO. a.	TRANS-MITTAL NO. b.	ITEM NO c.	SPECIFICATION PARAGRAPH NUMBER d.	DESCRIPTION OF ITEM SUBMITTED e.	TYPE OF SUBMITTAL: DATA f.	DRAWINGS g.	INSTRUCTIONS h.	SCHEDULES i.	STATEMENTS j.	REPORTS k.	CERTIFICATES l.	SAMPLES m.	RECORDS n.	O&M MANUALS o.	CLASSIFICATION: INFORMATION ONLY p.	GOVERNMENT APPROVED q.	REVIEWER r.	CONTRACTOR SCHEDULE DATES: SUBMIT s.	APPROVAL NEEDED BY t.	MATERIAL NEEDED BY u.	CONTRACTOR ACTION: CODE v.	DATE w.	SUBMIT TO GOVERN-MENT x.	GOVERNMENT ACTION: CODE y.	DATE z.	REMARKS aa.
			1.3	Manufacturer's Catalog	X										X											
			1.3	Material, Equipment, and Fixture	X											X										
				Lists																						
			1.3	Electrical Distribution System		X										X										
			1.3	As-Built Drawings		X										X										
			1.3	Factory Test						X					X											
			3.7	Field Testing						X						X										
			1.3	Test Reports						X						X										
			1.3	Materials and Equipment							X					X										
			1.3	Electrical Distribution System										X		X										

SUBMITTAL REGISTER
(ER 415 1-10)

CONTRACT NO.

TITLE AND LOCATION
C-17 Squad Ops/AMU Facility, McChord AFB, WA

CONTRACTOR

SPECIFICATION SECTION
16375

ACTIVITY NO. a.	TRANS-MITTAL NO. b.	ITEM NO c.	SPECIFICATION PARAGRAPH NUMBER d.	DESCRIPTION OF ITEM SUBMITTED e.	TYPE OF SUBMITTAL: DATA f.	DRAWINGS g.	INSTRUCTIONS h.	SCHEDULES i.	STATEMENTS j.	REPORTS k.	CERTIFICATES l.	SAMPLES m.	RECORDS n.	O&M MANUALS o.	CLASSIFICATION: INFORMATION ONLY p.	GOVERNMENT APPROVED q.	REVIEWER r.	CONTRACTOR SCHEDULE DATES: SUBMIT s.	APPROVAL NEEDED BY t.	MATERIAL NEEDED BY u.	CONTRACTOR ACTION: CODE v.	DATE w.	SUBMIT TO GOVERN-MENT x.	GOVERNMENT ACTION: CODE y.	DATE z.	REMARKS aa.
			1.3	Manufacturer's Catalog Data	X										X											
			1.3	Material, Equipment, and Fixture	X											X										
				Lists																						
			1.3	Installation Procedures	X										X											
			1.3	Electrical Distribution System		X										X										
			1.3	As-Built Drawings		X										X										
			1.3	Factory Test						X					X											
			1.3	Field Testing						X						X										
			1.3	Test Reports						X						X										
			1.3	Cable Installation Reports						X						X										
			1.3	Materials and Equipment							X					X										
			1.3	Cable Splicer Qualification							X					X										
			1.3	Cable Installer Qualifications							X				X											
			1.3	Electrical Distribution System										X		X										

SUBMITTAL REGISTER
(ER 415 1-10)

CONTRACT NO.

TITLE AND LOCATION
C-17 Squad Ops/AMU Facility, McChord AFB, WA

CONTRACTOR

SPECIFICATION SECTION
16415

ACTIVITY NO. a.	TRANS-MITTAL NO. b.	ITEM NO c.	SPECIFICATION PARAGRAPH NUMBER d.	DESCRIPTION OF ITEM SUBMITTED e.	TYPE OF SUBMITTAL: DATA f.	DRAWINGS g.	INSTRUCTIONS h.	SCHEDULES i.	STATEMENTS j.	REPORTS k.	CERTIFICATES l.	SAMPLES m.	RECORDS n.	O&M MANUALS o.	CLASSIFICATION: INFORMATION ONLY p.	GOVERNMENT APPROVED q.	REVIEWER r.	CONTRACTOR SCHEDULE DATES: SUBMIT s.	APPROVAL NEEDED BY t.	MATERIAL NEEDED BY u.	CONTRACTOR ACTION: CODE v.	DATE w.	SUBMIT TO GOVERN-MENT x.	GOVERNMENT ACTION: CODE y.	DATE z.	REMARKS aa.
			1.3	Manufacturer's Catalog	X										X											
			1.3	Material, Equipment, and Fixture	X											X										
				Lists																						
			1.3	Installation Procedures	X										X											
			1.3	Interior Electrical Equipment		X									X											
			1.3	As-Built Drawings		X										X										
			1.3	On-Site Test					X						X											
			1.3	Factory Test Reports						X					X											
			1.3	Field Test Plan						X						X										
			1.3	Field Test Reports						X						X										
			1.3	Materials and Equipment							X					X										
			1.3	Communications System Installer							X					X										

SUBMITTAL REGISTER
(ER 415 1-10)

CONTRACT NO.

TITLE AND LOCATION
C-17 Squad Ops/AMU Facility, McChord AFB, WA

CONTRACTOR

SPECIFICATION SECTION
16528

ACTIVITY NO. a.	TRANS-MITTAL NO. b.	ITEM NO c.	SPECIFICATION PARAGRAPH NUMBER d.	DESCRIPTION OF ITEM SUBMITTED e.	TYPE OF SUBMITTAL: DATA f.	DRAWINGS g.	INSTRUCTIONS h.	SCHEDULES i.	STATEMENTS j.	REPORTS k.	CERTIFICATES l.	SAMPLES m.	RECORDS n.	O&M MANUALS o.	CLASSIFICATION: INFORMATION ONLY p.	GOVERNMENT APPROVED q.	REVIEWER r.	CONTRACTOR SCHEDULE DATES: SUBMIT s.	APPROVAL NEEDED BY t.	MATERIAL NEEDED BY u.	CONTRACTOR ACTION: CODE v.	DATE w.	SUBMIT TO GOVERN-MENT x.	GOVERNMENT ACTION: CODE y.	DATE z.	REMARKS aa.
			1.4	Equipment and Materials	X										X											
			1.4	Spare Parts	X										X											
			1.4	Lighting System		X										X										
			1.4	As-Built Drawings		X									X											
			1.4	Operating Test						X						X										
			1.4	Ground Resistance Measurements						X						X										
			1.4	Lighting System										X	X											

SUBMITTAL REGISTER
(ER 415 1-10)

CONTRACT NO.

TITLE AND LOCATION
C-17 Squad Ops/AMU Facility, McChord AFB, WA

CONTRACTOR

SPECIFICATION SECTION
16710

ACTIVITY NO. a.	TRANS-MITTAL NO. b.	ITEM NO c.	SPECIFICATION PARAGRAPH NUMBER d.	DESCRIPTION OF ITEM SUBMITTED e.	TYPE OF SUBMITTAL: DATA f.	DRAWINGS g.	INSTRUCTIONS h.	SCHEDULES i.	STATEMENTS j.	REPORTS k.	CERTIFICATES l.	SAMPLES m.	RECORDS n.	O&M MANUALS o.	CLASSIFICATION: INFORMATION ONLY p.	GOVERNMENT APPROVED q.	REVIEWER r.	CONTRACTOR SCHEDULE DATES: SUBMIT s.	APPROVAL NEEDED BY t.	MATERIAL NEEDED BY u.	CONTRACTOR ACTION: CODE v.	DATE w.	SUBMIT TO GOVERN-MENT x.	GOVERNMENT ACTION: CODE y.	DATE z.	REMARKS aa.
			1.5	Spare Parts	X										X											
			1.5	Premises Distribution System		X										X										
			1.5	Record Drawings		X										X										
			1.5	Manufacturer's Recommendations			X									X										
			1.5	Test Plan					X							X										
			1.4	Qualifications					X							X										
			1.5	Test Reports						X						X										
			1.5	Premises Distribution System							X					X										
			2.1	Materials and Equipment							X					X										
			1.5	Installers							X					X										
			1.8	Record Keeping and Documentation									X			X										

SUBMITTAL REGISTER
(ER 415 1-10)

CONTRACT NO.

TITLE AND LOCATION
C-17 Squad Ops/AMU Facility, McChord AFB, WA

CONTRACTOR

SPECIFICATION SECTION
16721

ACTIVITY NO. a.	TRANS-MITTAL NO. b.	ITEM NO c.	SPECIFICATION PARAGRAPH NUMBER d.	DESCRIPTION OF ITEM SUBMITTED e.	TYPE OF SUBMITTAL: DATA f.	DRAWINGS g.	INSTRUCTIONS h.	SCHEDULES i.	STATEMENTS j.	REPORTS k.	CERTIFICATES l.	SAMPLES m.	RECORDS n.	O&M MANUALS o.	CLASSIFICATION: INFORMATION ONLY p.	GOVERNMENT APPROVED q.	REVIEWER r.	CONTRACTOR SCHEDULE DATES: SUBMIT s.	APPROVAL NEEDED BY t.	MATERIAL NEEDED BY u.	CONTRACTOR ACTION: CODE v.	DATE w.	SUBMIT TO GOVERN-MENT x.	GOVERNMENT ACTION: CODE y.	DATE z.	REMARKS aa.
			1.4	Battery	X											X										
			1.4	Voltage Drop	X											X										
			1.4	Spare Parts	X											X										
			1.4	Qualifications	X											X										
			1.4	Fire Alarm Reporting System		X										X										
			1.4	Draft Copy - Operating and			X								X											
				Maintenance Manual																						
			1.4	Operating and Maintenance Manuals			X									X										
			1.4	Training			X									X										
			1.4	Test Procedures					X							X										
			1.4	Testing						X						X										
			1.4	Equipment							X				X											
			1.4	Installer							X				X											

SUBMITTAL REGISTER
(ER 415 1-10)

CONTRACT NO.

TITLE AND LOCATION
C-17 Squad Ops/AMU Facility, McChord AFB, WA

CONTRACTOR

SPECIFICATION SECTION
16770

ACTIVITY NO. a.	TRANS-MITTAL NO. b.	ITEM NO c.	SPECIFICATION PARAGRAPH NUMBER d.	DESCRIPTION OF ITEM SUBMITTED e.	TYPE OF SUBMITTAL: DATA f.	DRAWINGS g.	INSTRUCTIONS h.	SCHEDULES i.	STATEMENTS j.	REPORTS k.	CERTIFICATES l.	SAMPLES m.	RECORDS n.	O&M MANUALS o.	CLASSIFICATION: INFORMATION ONLY p.	GOVERNMENT APPROVED q.	REVIEWER r.	CONTRACTOR SCHEDULE DATES: SUBMIT s.	APPROVAL NEEDED BY t.	MATERIAL NEEDED BY u.	CONTRACTOR ACTION: CODE v.	DATE w.	SUBMIT TO GOVERN-MENT x.	GOVERNMENT ACTION: CODE y.	DATE z.	REMARKS aa.
			1.3	Spare Parts	X										X											
			1.3	Paging System		X									X											
			1.3	Test Plan						X						X										
			3.3	Acceptance Tests						X						X										
			1.3	Paging System										X		X										

SECTION 01320

PROJECT SCHEDULE

PART 1 GENERAL

1.1 SUBMITTALS

Government approval is required for submittals with a "GA" designation; submittals having an "FIO" designation are for information only. The following shall be submitted in accordance with Section 01300 SUBMITTALS:

SD-07 Schedules

GA Preliminary project schedule, two (2) copies.

GA initial project schedule, two (2) copies
Activity No. Sort
Predecessor/successor listing
Cost Schedule
Floppy Disk (SDEF Format)
Activity Code Dictionary.

FIO Periodic schedules updates, monthly updates two (2) copies.
Floppy Disks (SDEF Format)
Narrative
Activity No. Sort
Cost Schedule

SD-08 Statements

Qualifications; GA .

Documentation showing qualifications of personnel preparing schedule reports.

1.2 QUALIFICATIONS

The Contractor shall designate an authorized representative who shall be responsible for the preparation of all required project schedule reports. This person shall have previously created and reviewed computerized schedules. Qualifications of this individual shall be submitted to the Contracting Officer for review with the Preliminary Project Schedule submission.

PART 2 PRODUCTS (Not Applicable)

PART 3 EXECUTION

3.1 GENERAL

Pursuant to the Contract Clause, SCHEDULE FOR CONSTRUCTION CONTRACTS a Project Schedule as described below shall be prepared. The scheduling of construction shall be the responsibility of the Contractor. Contractor management personnel shall actively participate in its development. Subcontractors and suppliers working on the project should also contribute in developing and maintaining an accurate Project Schedule. The approved Project Schedule shall be used to measure the progress of the work, to aid in evaluating time extensions, and to provide the basis of all progress payments.

3.2 BASIS FOR PAYMENT

The schedule shall be the basis for measuring Contractor progress. Lack of an approved schedule or scheduling personnel shall result in an inability of the Contracting Officer to evaluate Contractor progress for the purposes of payment. Failure of the Contractor to provide all information, as specified below, shall result in the disapproval of the entire Project Schedule submission and the inability of the Contracting Officer to evaluate Contractor progress for payment purposes. In the case where Project Schedule revisions have been directed by the Contracting Officer and those revisions have not been included in the Project Schedule, then the Contracting Officer may hold retainage up to the maximum allowed by contract, each payment period, until revisions to the Project Schedule have been made.

3.3 PROJECT SCHEDULE

The computer software system utilized by the Contractor to produce the Project Schedule shall be capable of providing all requirements of this specification including the SDEF (Standard Data Exchange Format). Failure of the Contractor to meet the requirements of this specification shall result in the disapproval of the schedule. Manual methods used to produce any required information shall require approval by the Contracting Officer.

3.3.1 Use of the Critical Path Method

The Critical Path Method (CPM) of network calculation shall be used to generate the Project Schedule. The Contractor shall provide the Project Schedule in Precedence Diagram Method (PDM)

3.3.2 Level of Detail Required

With the exception of the initial and preliminary schedule submission, the Project Schedule shall include an appropriate level of detail. Failure to develop or update the Project Schedule or provide data to the Contracting Officer at the appropriate level of detail, as specified by the Contracting Officer, shall result in the disapproval of the schedule. The Contracting Officer will use, but is not limited to, the following conditions to determine the appropriate level of detail to be used in the Project Schedule.

3.3.2.1 Activity Durations

Contractor submissions shall be required to follow the direction of the Contracting Officer regarding reasonable activity durations. Reasonable durations are those that allow the progress of activities to be accurately determined between payment periods. A rule of thumb, that the Contractor should use, is that less than 2 percent of all non-procurement activities' Original Durations shall be greater than 20 days.

3.3.2.2 Procurement Activities

Tasks related to the procurement of long lead materials or equipment shall be included as separate activities in the project schedule. Long lead materials and equipment are those materials that have a procurement cycle of over 90 days. Examples of procurement process activities include, but are not limited to: submittals, approvals, procurement, fabrication, delivery, installation, start-up, and testing.

3.3.2.3 Government Activities

Government and other agencies activities that could impact progress shall be shown. These activities include, but are not limited to: approvals, inspections, utility tie-in, Government Furnished Equipment (GFE) and notice to proceed for phasing requirements.

3.3.2.4 Responsibility

All activities shall be identified in the project schedule by the party responsible to perform the work. Responsibility includes, but is not limited to, the subcontracting firm, (at the lowest tier), Contractor work force, or Government agency performing a given task. Activities shall not belong to more than one responsible party. The responsible party for each activity shall be identified by the Responsibility Code.

3.3.2.5 Work Areas

All activities shall be identified in the project schedule by the work area in which the activity occurs. Activities shall not be allowed to cover more than one work area. The work area of each activity shall be identified by the Work Area Code.

3.3.2.6 Modification or Claim Number

Any activity that is added or changed by contract modification or used to justify claimed time shall be identified by a mod or claim code that changed the activity. Activities shall not belong to more than one modification or claim item. The modification or claim number of each activity shall be identified by the Mod or Claim Number.

3.3.2.7 Bid Item

All activities shall be identified in the project schedule by the Bid Item to which the activity belongs. An activity shall not contain work in more than one bid item. The bid item for each appropriate activity shall be identified by the Bid Item Code.

3.3.2.8 (Not used)

3.3.2.9 Category of Work

All Activities shall be identified in the project schedule according to the category of work which best describes the activity. Category of work refers, but is not limited to, to the procurement chain of activities including such items as submittals, approvals, procurement, fabrication, delivery, installation, start-up, and testing. The category of work for each activity shall be identified by the Category of Work Code.

3.3.2.10 Feature of Work

All activities shall be identified in the project schedule according to the feature of work to which the activity belongs. Feature of work refers, but is not limited to a work breakdown structure for the project. The feature of work for each activity shall be identified by the Feature of Work Code.

3.3.3 Scheduled Project Completion

The schedule interval shall extend from notice-to-proceed to the contract completion date.

3.3.3.1 Project Start Date

The schedule shall start no earlier than the date that the Notice to Proceed (NTP) was acknowledged. The Contractor shall include as the first activity in the project schedule an activity called "Start Project". The "Start Project" activity shall have: a "ES" constraint, a constraint date equal to the date that the NTP was acknowledged, and a zero day duration.

3.3.3.2 Constraint of Last Activity

Completion of the last activity in the schedule shall be constrained by the contract completion date. Calculation on project updates shall be such that if the early finish of the last activity falls after the contract completion date, then the float calculation shall reflect a negative float on the critical path. The Contractor shall include as the last activity in the project schedule an activity call "End Project". The "End Project" activity shall have: a "LF" constraint, a constraint date equal to the completion date for the project, and a zero day duration.

3.3.3.3 Early Project Completion

In the event the project schedule shows completion, the project prior to the contract completion date, the Contractor shall identify those activities that have been accelerated and/or those activities that are scheduled in parallel to support the Contractor's "early" completion. Contractor shall specifically address each of the activities noted at every project schedule update period to assist the Contracting Officer to evaluate the Contractor's ability to actually complete prior to the contract period.

3.3.4 Interim Completion Dates

Contractually specified interim completion dates shall also be constrained to show negative float if the early finish date of the last activity in that phase falls after the interim completion date.

3.3.5 Default Progress Data Disallowed

Actual Start and Finish dates shall not be automatically updated by default mechanisms that may be included in CPM scheduling software systems. Actual Start and Finish dates on the CPM schedule shall match those dates provided from Contractor Quality Control Reports. Failure of the Contractor to document the Actual Start and Finish dates on the Daily Quality Control report for every in progress or completed activity and insure that the data contained on the Daily Quality Control reports is the sole basis for schedule updating shall result in the disapproval of the Contractor's schedule and the inability of the Contracting Officer to evaluate Contractor progress for payment purposes.

3.3.6 Out-of-Sequence Progress

Activities that have posted progress without predecessors being completed (Out-of-Sequence Progress) shall be allowed only by the case-by-case approval of the Contracting Officer. The Contracting Officer may direct that changes in schedule logic be made to correct any or all out-of-sequence work.

3.3.7 Negative Lags

Lag durations contained in the project schedule shall not have a negative value.

3.4 PROJECT SCHEDULE SUBMISSIONS

The Contractor shall provide the submissions as described below. The data disk, reports, and network diagrams required for each submission are contained in paragraph SUBMISSION REQUIREMENTS.

3.4.1 Preliminary Project Schedule Submission

The Preliminary Project Schedule, defining the Contractor's planned operations for the first 60 calendar days shall be submitted for approval within 10 calendar days after Notice to Proceed is acknowledged. The approved preliminary schedule shall be used for payment purposes not to exceed 60 calendar days after Notice to Proceed.

3.4.2 Initial Project Schedule Submission

The Initial Project Schedule shall be submitted for approval within 40 calendar days after Notice to Proceed. The schedule shall provide a reasonable sequence of activities which represent work through the entire project and shall be at a reasonable level of detail.

3.4.3 Periodic Schedule Updates

Based on the result of progress meetings, specified in "Periodic Progress Meetings," the Contractor shall submit periodic schedule updates. These submissions shall enable the Contracting Officer or to assess Contractor's progress. If the Contractor fails or refuses to furnish the information and project schedule data, which in the judgment of the Contracting Officer or authorized representative, is necessary for verifying the contractor's progress, the Contractor shall be deemed not to have provided an estimate upon which progress payment may be made.

3.4.4 Standard Activity Coding Dictionary

The Contractor shall submit, with the Initial Project Schedule, a coding scheme that shall be used throughout the project for all activity codes contained in the schedule. The coding scheme submitted shall list the values for each activity code category and translate those values into project specific designations. For example, a Responsibility Code Value, "ELE", may be identified as "Electrical Subcontractor." Activity code values shall represent the same information throughout the duration of the contract. Once approved with the Initial Project Schedule submission, changes to the activity coding scheme must be approved by the Contracting Officer.

3.5 SUBMISSION REQUIREMENTS

The as noted in paragraph 1.1 items shall be submitted by the Contractor for the initial submission, and every periodic project schedule update throughout the life of the project:

3.5.1 Data Disks

Two data disks containing the project schedule shall be provided. Data on the disks shall be in the format specified in paragraph 3.10 NAS DATA.

3.5.1.1 File Medium

Required data shall be submitted on 89 mm (3.5 inch) disks, formatted to hold 1.44 MB of data, under the MS-DOS Version 5.0 operating system.

3.5.1.2 Disk Label

A permanent exterior label shall be affixed to each disk submitted. The label shall indicate the type of schedule (Initial, Update, or Change), full contract number, project name, project location, data date, name and telephone number or person responsible for the schedule, and the MS-DOS version used to format the disk.

3.5.1.3 File Name

Each file submitted shall have a name related to either the schedule data date, project name, or contract number. The Contractor shall develop a naming convention that will insure that the names of the files submitted are unique. The Contractor shall submit the file naming convention to the Contracting Officer for approval.

3.5.2 Narrative Report

A Narrative Report shall be provided with each update of the project schedule. This report shall be provided as the basis of the Contractor's progress payment request. The Narrative Report shall include: a description of activities along the critical path, a description of current and anticipated problem areas or delaying factors and their impact, and an explanation of corrective actions taken.

3.5.3 Approved Changes Verification

Only project schedule changes that have been previously approved by the Contracting Officer shall be included in the schedule submission. The Narrative Report shall specifically reference, on an activity by activity basis, all changes made since the previous period and relate each change to documented, approved schedule changes.

3.5.4 Schedule Reports

The format for each activity for the schedule reports listed below shall contain: Activity Numbers, Activity Description, Original Duration, Remaining Duration, Early Start Date, Early Finish Date, Late Start Date, Late Finish Date, Total Float. Actual Start and Actual Finish Dates shall be printed for those activities in-progress or completed.

3.5.4.1 Activity Report

A list of all activities sorted according to activity number. For completed activities the Actual Start Date shall be used as the secondary sort.

3.5.4.2 Logic Report

A list of Preceding and Succeeding activities for every activity in ascending order by activity number and then sorted according to Early Start Date. For completed activities the Actual Start Date shall be used as the secondary sort.

3.5.4.3 Total Float Report

A list of all activities sorted in ascending order of total float. Activities which have the same amount of total float shall be listed in ascending order of Early Start Dates.

3.5.4.4 Earnings Report

A compilation of the Contractor's Total Earnings on the project from the Notice to Proceed until the most recent Monthly Progress Meeting. This report shall reflect the Earnings of specific activities based on the agreements made in the field and approved between the Contractor and Contracting Officer at the most recent Monthly Progress Meeting. Provided that the Contractor has provided a complete schedule update, this report shall serve as the basis of determining Contractor Payment. Activities shall be grouped by bid item and sorted by activity numbers. This report shall: sum all activities in a bid item and provide a bid item percent; complete and sum all bid items to provide a total project percent complete. The printed report shall contain, for each activity: Activity Number, Activity Description, Original Budgeted Amount, Total Quantity, Quantity to Date, Percent Complete (based on cost), Earnings to Date.

3.5.5 Network Diagram

The network diagram shall be required on the initial schedule submission and on quarterly update submissions. The network diagram shall depict and display the order and interdependence of activities and the sequence in which the work is to be accomplished. The Contracting Officer will use, but is not limited to, the following conditions to review compliance with this paragraph:

3.5.5.1 Continuous Flow

Diagrams shall show a continuous flow from left to right with no arrows from right to left. The activity or event number, description, duration, and estimated earned value shall be shown on the diagram.

3.5.5.2 Project Milestone Dates

Dates shall be shown on the diagram for start of project, any contract required interim completion dates, and contract completion dates.

3.5.5.3 Critical Path

The critical path shall be clearly shown.

3.5.5.4 Banding

Activities shall be grouped to assist in the understanding of the activity sequence. Typically, this flow will group activities by category of work, work area and/or responsibility.

3.5.5.5 S-Curves

Earnings curves shall be provided showing projected early and late earnings and earnings to date.

3.6 PERIODIC PROGRESS MEETINGS

Progress meetings to discuss payment shall include a monthly on-site meeting or other regular intervals mutually agreed to at the preconstruction conference. During this meeting the Contractor will describe, on an activity by activity basis, all proposed revisions and adjustments to the project schedule required to reflect the current status of the project. The Contracting Officer will approve activity progress, proposed revisions, and adjustments as appropriate.

3.6.1 Meeting Attendance

The Contractor's Project Manager and Scheduler shall attend the regular progress meeting.

3.6.2 Update Submission Following Progress Meeting

A complete update of the project schedule containing all approved progress, revisions, and adjustments, based on the regular progress meeting, shall be submitted not later than 4 working days after the monthly progress meeting.

3.6.3 Progress Meeting Contents

Update information, including Actual Start Dates, Actual Finish Dates, Remaining Durations, and Cost to Date shall be subject to the approval of the Contracting Officer. The following minimum set of items which the Contractor shall address, on an activity by activity basis, during each progress meeting.

3.6.3.1 Start and Finish Dates

The Actual Start and Actual Finish dates for each activity currently in-progress or completed activities.

3.6.3.2 Time Completion

The estimated Remaining Duration for each activity in-progress. Time-based progress calculations must be based on Remaining Duration for each activity.

3.6.3.3 Cost Completion

The earnings for each activity started. Payment shall be based on earnings for each in-progress or completed activity. Payment for individual activities shall not be made for work that contains quality defects. A portion of the overall project amount may be retained based on delays of activities.

3.6.3.4 Logic Changes

All logic changes pertaining to Notice to Proceed on change orders, change orders to be incorporated into the schedule, contractor proposed changes in work sequence, corrections to schedule logic for out-of-sequence progress, lag durations, and other changes that have been made pursuant to contract provisions shall be specifically identified and discussed.

3.6.3.5 Other Changes

Other changes required due to delays in completion of any activity or group of activities are those delays beyond the Contractors control such as strikes and unusual weather. Also included are delays encountered due to submittals, Government Activities, deliveries or work stoppage which makes re-planning the work necessary, and when the schedule does not represent the actual prosecution and progress of the work.

3.7 REQUESTS FOR TIME EXTENSIONS

In the event the Contractor requests an extension of the contract completion date, he shall furnish such justification, project schedule data and supporting evidence as the Contracting Officer may deem necessary for a determination as to whether or not the Contractor is entitled to an extension of time under the provisions of the contract. Submission of proof of delay, based on revised activity logic, duration, and costs (updated to the specific date that the delay occurred) is obligatory to any approvals.

3.7.1 Justification of Delay

The project schedule must clearly display that the Contractor has used, in full, all the float time available for the work involved with this request. The Contracting Officer's determination as to the number of allowable days of contract extension, shall be based upon the project schedule updates in effect for the time period in question and other factual information. Actual delays that are found to be caused by the Contractor's own actions, which result in the extension of the schedule, shall not be a cause for a time extension to the contract completion date.

3.7.2 Submission Requirements

The Contractor shall submit a justification for each request for a change in the contract completion date of under two weeks based upon the most recent schedule update at the time of the Notice to Proceed or constructive direction issued for the change. Such a request shall be in accordance with the requirements of other appropriate Contract Clauses and shall include, as a minimum:

a. A list of affected activities, with their associated project schedule activity number.

b. A brief explanation of the causes of the change.

c. An analysis of the overall impact of the changes proposed.

d. A sub-network of the affected area.

Activities impacted in each justification for change shall be identified by a unique activity code contained in the required data file.

3.7.3 Additional Submission Requirements

For any request for time extension for over 2 weeks, the Contracting Officer may request an interim update with revised activities for a specific change request. The Contractor shall provide this disk within 4 days of the Contracting Officer's request.

3.8 DIRECTED CHANGES

If Notice to Proceed (NTP) is issued for changes prior to settlement of price and/or time, the Contractor shall submit proposed schedule revisions to the Contracting Officer within 2 weeks of the NTP being issued. The proposed revisions to the schedule will be approved by the Contracting Officer prior to inclusion of those changes within the project schedule. If the Contractor fails to submit the proposed revisions, the Contracting Officer may furnish the Contractor suggested revisions to the project schedule. The Contractor shall include these revisions in the project schedule until the Contractor submits revisions, and final changes and impacts have been negotiated. If the Contractor has any objections to the revisions furnished by the Contracting Officer, then the Contractor shall advise the Contracting Officer within 2 weeks of receipt of the revisions. Regardless of the objections, the Contractor will continue to update their schedule with the Contracting Officer's revisions until a mutual agreement in the revisions may be made. If the Contractor fails to submit alternative revisions within 2 weeks of receipt of the Contracting Officer's proposed revisions, the Contractor will be deemed to have concurred with the Contracting Officer's proposed revisions. The proposed revisions will then be the basis for an equitable adjustment for performance of the work.

3.9 OWNERSHIP OF FLOAT

Float available in the schedule, at any time, shall not be considered for the exclusive use of either the Government or the Contractor.

3.10 NAS DATA

The Contractor shall provide the Government with the means to electronically transfer all required NAS data into its ADP equipment and schedule software, such that it can independently obtain and process the information. The Contractor may use network analysis software different from that used by the Contracting Officer in the Resident Office. Under this alternative, the Contractor shall furnish the following:

NAS data that complies with the Scheduling System Data Exchange Format (SDEF). This is a standard ASCII format for exchanging scheduling data and is compatible with our resident management system. Many software developers are using SDEF. The SDEF specifications are in a separate publication, available from the Internet WWW.CECER.AARMY.MIL/PL/SDEF.

-- END OF SECTION --

SECTION 01451

CONTRACTOR QUALITY CONTROL

PART 1 GENERAL

1.1 REFERENCES

The publications listed below form a part of this specification to the extent referenced. The publications are referred to in the text by basic designation only.

AMERICAN SOCIETY FOR TESTING AND MATERIALS (ASTM)

ASTM D 3740	(1996) Minimum Requirements for Agencies Engaged in the Testing and/or Inspection of Soil and Rock as Used in Engineering Design and Construction
ASTM E 329	(1995b) Agencies Engaged in the Testing and/or Inspection of Materials Used in Construction

1.2 PAYMENT

Separate payment will not be made for providing and maintaining an effective Quality Control program, and all costs associated therewith shall be included in the applicable unit prices or lump-sum prices contained in the Bidding Schedule.

PART 2 PRODUCTS (NOT APPLICABLE)

PART 3 EXECUTION

3.1 GENERAL

The Contractor is responsible for quality control and shall establish and maintain an effective quality control system in compliance with the Contract Clause titled "Inspection of Construction." The quality control system shall consist of plans, procedures, and organization necessary to produce an end product which complies with the contract requirements. The system shall cover all construction operations, both onsite and offsite, and shall be keyed to the proposed construction sequence. The project superintendent will be held responsible for the quality of work on the job and is subject to removal by the Contracting Officer for non-compliance with quality requirements specified in the contract. The project superintendent in this context shall mean the individual with the responsibility for the overall management of the project including quality and production.

3.2 QUALITY CONTROL PLAN

3.2.1 General

The Contractor shall furnish for review by the Government, not later than 10 days after receipt of notice to proceed, the Contractor Quality Control (CQC) Plan proposed to implement the requirements of the

Contract Clause titled "Inspection of Construction." The plan shall identify personnel, procedures, control, instructions, test, records, and forms to be used. The Government will consider an interim plan for the first 60 days of operation. Construction will be permitted to begin only after acceptance of the CQC Plan or acceptance of an interim plan applicable to the particular feature of work to be started. Work outside of the features of work included in an accepted interim plan will not be permitted to begin until acceptance of a CQC Plan or another interim plan containing the additional features of work to be started.

3.2.2 Content of the CQC Plan

The CQC Plan shall include, as a minimum, the following to cover all construction operations, both onsite and offsite, including work by subcontractors, fabricators, suppliers, and purchasing agents:

a. A description of the quality control organization, including a chart showing lines of authority and acknowledgment that the CQC staff shall implement the three phase control system for all aspects of the work specified. The staff shall include a CQC System Manager who shall report to the project superintendent.

b. The name, qualifications (in resume format), duties, responsibilities, and authorities of each person assigned a CQC function.

c. A copy of the letter to the CQC System Manager signed by an authorized official of the firm which describes the responsibilities and delegates sufficient authorities to adequately perform the functions of the CQC System Manager, including authority to stop work which is not in compliance with the contract. The CQC System Manager shall issue letters of direction to all other various quality control representatives outlining duties, authorities, and responsibilities. Copies of these letters shall also be furnished to the Government.

d. Procedures for scheduling, reviewing, certifying, and managing submittals, including those of subcontractors, offsite fabricators, suppliers, and purchasing agents. These procedures shall be in accordance with Section 01330 SUBMITTAL PROCEDURES.

e. Control, verification, and acceptance testing procedures for each specific test to include the test name, specification paragraph requiring test, feature of work to be tested, test frequency, and person responsible for each test. (Laboratory facilities will be approved by the Contracting Officer.)

f. Procedures for tracking preparatory, initial, and follow-up control phases and control, verification, and acceptance tests including documentation.

g. Procedures for tracking construction deficiencies from identification through acceptable corrective action. These procedures shall establish verification that identified deficiencies have been corrected.

h. Reporting procedures, including proposed reporting formats.

i. A list of the definable features of work. A definable feature of work is a task which is separate and distinct from other tasks, has separate control requirements, and may be identified by different trades or disciplines, or it may be work by the same trade in a different environment.

Although each section of the specifications may generally be considered as a definable feature of work, there are frequently more than one definable features under a particular section. This list will be agreed upon during the coordination meeting.

3.2.3 Acceptance of Plan

Acceptance of the Contractor's plan is required prior to the start of construction. Acceptance is conditional and will be predicated on satisfactory performance during the construction. The Government reserves the right to require the Contractor to make changes in his CQC Plan and operations including removal of personnel, as necessary, to obtain the quality specified.

3.2.4 Notification of Changes

After acceptance of the CQC Plan, the Contractor shall notify the Contracting Officer in writing of any proposed change. Proposed changes are subject to acceptance by the Contracting Officer.

3.3 COORDINATION MEETING

After the Preconstruction Conference, before start of construction, and prior to acceptance by the Government of the CQC Plan, the Contractor shall meet with the Contracting Officer or Authorized Representative and discuss the Contractor's quality control system. The CQC Plan shall be submitted for review a minimum of 5 calendar days prior to the Coordination Meeting. During the meeting, a mutual understanding of the system details shall be developed, including the forms for recording the CQC operations, control activities, testing, administration of the system for both onsite and offsite work, and the interrelationship of Contractor's Management and control with the Government's Quality Assurance. Minutes of the meeting shall be prepared by the Government and signed by both the Contractor and the Contracting Officer. The minutes shall become a part of the contract file. There may be occasions when subsequent conferences will be called by either party to reconfirm mutual understandings and/or address deficiencies in the CQC system or procedures which may require corrective action by the Contractor.

3.4 QUALITY CONTROL ORGANIZATION

3.4.1 General

The requirements for the CQC organization are a CQC System Manager and sufficient number of additional qualified personnel to ensure contract compliance. The Contractor shall provide a CQC organization which shall be at the site at all times during progress of the work and with complete authority to take any action necessary to ensure compliance with the contract. All CQC staff members shall be subject to acceptance by the Contracting Officer.

3.4.2 CQC System Manager

The Contractor shall identify as CQC System Manager an individual within the onsite work organization who shall be responsible for overall management of CQC and have the authority to act in all CQC matters for the Contractor. The CQC System Manager shall be a graduate engineer, graduate architect, or a graduate of construction management, with a minimum of 5 years construction experience on construction similar to this contract. This CQC System Manager shall be on the site at all times during construction and shall be employed by the prime Contractor. The CQC System Manager shall be

assigned no other duties. An alternate for the CQC System Manager shall be identified in the plan to serve in the event of the System Manager's absence. The requirements for the alternate shall be the same as for the designated CQC System Manager.

3.4.3 Supplemental Personnel

A staff shall be maintained under the direction of the CQC system manager to perform all QC activities. The staff must be of sufficient size to ensure adequate QC coverage of all work phases, work shifts, and work crews involved in the construction. These personnel may perform other duties, but must be fully qualified by experience and technical training to perform their assigned QC responsibilities and must be allowed sufficient time to carry out these responsibilities. The QC plan will clearly state the duties and responsibilities of each staff member.

3.4.4 Additional Requirement

In addition to the above experience education requirements the CQC System Manager shall have completed the course entitled "Construction Quality Management For Contractors". This course is periodically offered at AGC offices throughout the state of Washington and Oregon.

3.4.5 Organizational Changes

The Contractor shall maintain the CQC staff at full strength at all times. When it is necessary to make changes to the CQC staff, the Contractor shall revise the CQC Plan to reflect the changes and submit the changes to the Contracting Officer for acceptance.

3.5 SUBMITTALS

Submittals shall be made as specified in Section 01330 SUBMITTAL PROCEDURES. The CQC organization shall be responsible for certifying that all submittals are in compliance with the contract requirements.

3.6 CONTROL

Contractor Quality Control is the means by which the Contractor ensures that the construction, to include that of subcontractors and suppliers, complies with the requirements of the contract. At least three phases of control shall be conducted by the CQC System Manager for each definable feature of work as follows:

3.6.1 Preparatory Phase

This phase shall be performed prior to beginning work on each definable feature of work, after all required plans/documents/materials are approved/accepted, and after copies are at the work site. This phase shall include:

a. A review of each paragraph of applicable specifications.

b. A review of the contract drawings.

c. A check to assure that all materials and/or equipment have been tested, submitted, and approved.

d. Review of provisions that have been made to provide required control inspection and testing.

e. Examination of the work area to assure that all required preliminary work has been completed and is in compliance with the contract.

f. A physical examination of required materials, equipment, and sample work to assure that they are on hand, conform to approved shop drawings or submitted data, and are properly stored.

g. A review of the appropriate activity hazard analysis to assure safety requirements are met.

h. Discussion of procedures for controlling quality of the work including repetitive deficiencies. Document construction tolerances and workmanship standards for that feature of work.

i. A check to ensure that the portion of the plan for the work to be performed has been accepted by the Contracting Officer.

j. Discussion of the initial control phase.

k. The Government shall be notified at least 48 hours in advance of beginning the preparatory control phase. This phase shall include a meeting conducted by the CQC System Manager and attended by the superintendent, other CQC personnel (as applicable), and the foreman responsible for the definable feature. The results of the preparatory phase actions shall be documented by separate minutes prepared by the CQC System Manager and attached to the daily CQC report. The Contractor shall instruct applicable workers as to the acceptable level of workmanship required in order to meet contract specifications.

3.6.2 Initial Phase

This phase shall be accomplished at the beginning of a definable feature of work. The following shall be accomplished:

a. A check of work to ensure that it is in full compliance with contract requirements. Review minutes of the preparatory meeting.

b. Verify adequacy of controls to ensure full contract compliance. Verify required control inspection and testing.

c. Establish level of workmanship and verify that it meets minimum acceptable workmanship standards. Compare with required sample panels as appropriate.

d. Resolve all differences.

e. Check safety to include compliance with and upgrading of the safety plan and activity hazard analysis. Review the activity analysis with each worker.

f. The Government shall be notified at least 24 hours in advance of beginning the initial phase. Separate minutes of this phase shall be prepared by the CQC System Manager and attached to the daily CQC report. Exact location of initial phase shall be indicated for future reference and comparison with follow-up phases.

g. The initial phase should be repeated for each new crew to work onsite, or any time acceptable specified quality standards are not being met.

3.6.3 Follow-up Phase

Daily checks shall be performed to assure control activities, including control testing, are providing continued compliance with contract requirements, until completion of the particular feature of work. The checks shall be made a matter of record in the CQC documentation. Final follow-up checks shall be conducted and all deficiencies corrected prior to the start of additional features of work which may be affected by the deficient work. The Contractor shall not build upon nor conceal non-conforming work.

3.6.4 Additional Preparatory and Initial Phases

Additional preparatory and initial phases shall be conducted on the same definable features of work if the quality of on-going work is unacceptable, if there are changes in the applicable CQC staff, onsite production supervision or work crew, if work on a definable feature is resumed after a substantial period of inactivity, or if other problems develop.

3.7 TESTS

3.7.1 Testing Procedure

The Contractor shall perform specified or required tests to verify that control measures are adequate to provide a product which conforms to contract requirements, see Table 1 – Minimum Testing, attached at the end of this specification section. Upon request, the Contractor shall furnish to the Government duplicate samples of test specimens for possible testing by the Government. Testing includes operation and/or acceptance tests when specified. The Contractor shall procure the services of a Corps of Engineers approved testing laboratory or establish an approved testing laboratory at the project site. The Contractor shall perform the following activities and record and provide the following data:

a. Verify that testing procedures comply with contract requirements.

b. Verify that facilities and testing equipment are available and comply with testing standards.

c. Check test instrument calibration data against certified standards.

d. Verify that recording forms and test identification control number system, including all of the test documentation requirements, have been prepared.

e. Results of all tests taken, both passing and failing tests, shall be recorded on the CQC report for the date taken. Specification paragraph reference, location where tests were taken, and the sequential control number identifying the test shall be given. If approved by the Contracting Officer, actual test reports may be submitted later with a reference to the test number and date taken. An information copy of tests performed by an offsite or commercial test facility

shall be provided directly to the Contracting Officer. Failure to submit timely test reports as stated may result in nonpayment for related work performed and disapproval of the test facility for this contract.

3.7.2 Testing Laboratories

3.7.2.1 Capability Check

The Government reserves the right to check laboratory equipment in the proposed laboratory for compliance with the standards set forth in the contract specifications and to check the laboratory technician's testing procedures and techniques. Costs of testing the Contractor Laboratory facilities for Government acceptance shall be borne by the Contractor. Laboratory facilities, including personnel and equipment, utilized for testing soils, concrete, asphalt and steel shall meet criteria detailed in ASTM D 3740 and ASTM E 329, and be accredited by the American Association of Laboratory Accreditation (AALA), National Institute of Standards and Technology (NIST), National Voluntary Laboratory Accreditation Program (NVLAP), the American Association of State Highway and Transportation Officials (AASHTO), or other approved national accreditation authority. All personnel performing concrete testing shall be certified by the American Concrete Institute (ACI). The contractor shall submit documentation showing the AALA, or other approved testing facility, certification, personnel ACI certifications, and the name and work experience of the Registered Professional Engineer on the staff.

3.7.2.2 Capability Recheck

If the selected laboratory fails the capability check, the Contractor will be assessed a charge of $500.00 plus travel costs to reimburse the Government for each succeeding recheck of the laboratory or the checking of a subsequently selected laboratory. Such costs will be deducted from the contract amount due the Contractor.

3.7.3 Onsite Laboratory

The Government reserves the right to utilize the Contractor's control testing laboratory and equipment to make assurance tests and to check the Contractor's testing procedures, techniques, and test results at no additional cost to the Government.

3.7.4 Furnishing or Transportation of Samples for Testing

Costs incidental to the transportation of samples or materials will be borne by the Contractor. Samples of materials for test verification and acceptance testing by the Government shall be delivered to the Corps of Engineers Division Laboratory, f.o.b., at the following address:

U.S. Army Corps of Engineers
Materials Testing Center
Waterways Experiment Station
3909 Hall Ferry Road
Vicksburg, MS 39180-6199
Phone: (610) 634-3974

ATTN: Project _____, Contract Number _____

Coordination for each specific test, exact delivery location and dates will be made through the Area Office.
If samples are scheduled to arrive at the laboratory on a weekend (after 1700 Friday through Sunday) notify the laboratory at least 24 hours in advance at (601) 634-3974 to arrange for delivery.

3.8 COMPLETION INSPECTION

3.8.1 Punch-Out Inspection

Near the completion of all work or any increment thereof established by a completion time stated in the Special Clause entitled "Commencement, Prosecution, and Completion of Work," or stated elsewhere in the specifications, the CQC System Manager shall conduct an inspection of the work and develop a punch list of items which do not conform to the approved drawings and specifications. Such a list of deficiencies shall be included in the CQC documentation, as required by paragraph DOCUMENTATION below, and shall include the estimated date by which the deficiencies will be corrected. The CQC System Manager or staff shall make a second inspection to ascertain that all deficiencies have been corrected. Once this is accomplished, the Contractor shall notify the Government that the facility is ready for the Government Pre-Final inspection.

3.8.2 Pre-Final Inspection

The Government will perform this inspection to verify that the facility is complete and ready to be occupied. A Government Pre-Final Punch List may be developed as a result of this inspection. The Contractor's CQC System Manager shall ensure that all items on this list have been corrected before notifying the Government so that a Final inspection with the customer can be scheduled. Any items noted on the Pre-Final inspection shall be corrected in a timely manner. These inspections and any deficiency corrections required by this paragraph shall be accomplished within the time slated for completion of the entire work or any particular increment thereof if the project is divided into increments by separate completion dates.

3.8.3 Final Acceptance Inspection

The Contractor's Quality Control Inspection personnel, plus the superintendent or other primary management person, and the Contracting Officer's Representative shall be in attendance at this inspection. Additional Government personnel including, but not limited to, those from Base/Post Civil Facility Engineer user groups, and major commands may also be in attendance. The final acceptance inspection will be formally scheduled by the Contracting Officer based upon results of the Pre-Final inspection. Notice shall be given to the Contracting Officer at least 14 days prior to the final acceptance inspection and shall include the Contractor's assurance that all specific items previously identified to the Contractor as being unacceptable, along with all remaining work performed under the contract, will be

complete and acceptable by the date scheduled for the final acceptance inspection. Failure of the Contractor to have all contract work acceptably complete for this inspection will be cause for the Contracting Officer to bill the Contractor for the Government's additional inspection cost in accordance with the contract clause titled "Inspection of Construction".

3.9 DOCUMENTATION

The Contractor shall maintain current records providing factual evidence that required quality control activities and/or tests have been performed. These records shall include the work of subcontractors and suppliers and shall be on an acceptable form that includes, as a minimum, the following information:

a. Contractor/subcontractor and their area of responsibility.

b. Operating plant/equipment with hours worked, idle, or down for repair.

c. Work performed each day, giving location, description, and by whom. When Network Analysis (NAS) is used, identify each phase of work performed each day by NAS activity number.

d. Test and/or control activities performed with results and references to specifications/drawings requirements. The control phase should be identified (Preparatory, Initial, Follow-up). List deficiencies noted along with corrective action.

e. Quantity of materials received at the site with statement as to acceptability, storage, and reference to specifications/drawings requirements.

f. Submittals reviewed, with contract reference, by whom, and action taken.

g. Off-site surveillance activities, including actions taken.

h. Job safety evaluations stating what was checked, results, and instructions or corrective actions.

i. Instructions given/received and conflicts in plans and/or specifications.

j. Contractor's verification statement.

These records shall indicate a description of trades working on the project; the number of personnel working; weather conditions encountered; and any delays encountered. These records shall cover both conforming and deficient features and shall include a statement that equipment and materials incorporated in the work and workmanship comply with the contract. The original and one copy of these records in report form shall be furnished to the Government daily within 24 hours after the date covered by the report, except that reports need not be submitted for days on which no work is performed. As a minimum, one report shall be prepared and submitted for every 7 days of no work and on the last day of a no work period. All calendar days shall be accounted for throughout the life of the contract. The first report following a day of no work shall be for that day only. Reports shall be signed and dated by the CQC System Manager. The report from the CQC System Manager shall include copies of test reports and copies of reports prepared by all subordinate quality control personnel.

3.10 SAMPLE FORMS

Sample forms are attached at the end of this section.

3.11 NOTIFICATION OF NONCOMPLIANCE

The Contracting Officer will notify the Contractor of any detected noncompliance with the foregoing requirements. The Contractor shall take immediate corrective action after receipt of such notice. Such notice, when delivered to the Contractor at the work site, shall be deemed sufficient for the purpose of notification. If the Contractor fails or refuses to comply promptly, the Contracting Officer may issue an order stopping all or part of the work until satisfactory corrective action has been taken. No part of the time lost due to such stop orders shall be made the subject of claim for extension of time or for excess costs or damages by the Contractor.

3.12 IMPLEMENTATION OF GOVERNMENT RESIDENT MANAGEMENT SYSTEM FOR CONTRACTOR QUALITY CONTROL OF CONTRACT

The Contractor shall utilize a Government furnished Contracting Quality Control (CQC) Programming Module (a computerized executable file which is DOS based and operates on a minimum 80386 IBM compatible computer). The Module includes a Daily CQC Reporting System form which must also be used. This form may be in addition to other Contractor desired reporting forms. However, all other such reporting forms shall be consolidated into this one Government specified Daily CQC Report Form. The Contractor will also be required to complete Government-Furnished Module elements which include, but are not limited to, Prime Contractor staffing; letter codes; planned cumulative progress earnings; subcontractor information showing trade, name, address, point-of-contact, and insurance expiration dates; definable features of work; pay activity and activity information; required Quality Control tests tied to individual activities; planned User Schooling tied to specific specification paragraphs and Contractor activities; Installed Property Listing, and Transfer Property Listing. The Contractor shall also enter and expand (as necessary) the following submittal data as provided in the solicitation documents: submittal information relating to specification section, description, activity number, review period and expected procurement period. The sum of all activity values shall equal the contract amount, and all Bid Items, The sum of all activity values shall equal the contract amount, and all Bid Items, Options and Additives shall be separately identified, in accordance with the “Bidding Schedule”. Bid Items may include multiple Activities, but Activities may only be assigned to one such Bid Item. This Module shall be completed to the satisfaction of the Contracting Officer prior to any contract payment (except for Bonds, Insurance and/or Mobilization, as approved by the Contracting Officer), and shall be updated as required.

3.12.1 During the course of the contract, the Contractor will receive various Quality Assurance comments from the Government that will reflect corrections needed to Contractor activities or reflect outstanding or future items needing the attention of the Contractor. The Contractor shall acknowledge receipt of these comments by specific number reference on his Daily CQC Report, and shall also reflect on his Daily CQC Report when these items are specifically completed or corrected to permit Government verification.

3.12.2 The Contractor’s schedule system shall include, as specific and separate activities, all Preparatory Phase Meetings (inspections); all O&M Manuals; and all Test Plans of Electrical and Mechanical Equipment or Systems that require validation testing or instructions to Government representatives.

TABLE 1

MINIMUM SAMPLING AND TESTING FREQUENCY

Materials	Test	Minimum Sampling and Testing Frequency
Fills, Embankments, Backfills, Subgrade, Subbase, and Base Course Material		
Fill and Embankment	Field Density[2/12/]	Two tests per lift for each increment or fraction of 1,672 square meters (2000 sy) and any time material type changes.
	Lab Density[3/]	One test initially per each type of materials or blended material and any time material type changes, and one every 10 field density tests.
	Gradation[1/]	One test every 153 cubic meters (200 cubic yards) of fill for each type of materials or blended material and any time material type changes.
Subgrade	Field Density[2/12/]	One test per each increment or fraction of 84 square meters (100 s.y.)
	Lab Density[3/]	One test every 10 field density tests.
Backfill for Culverts, Trenches, Buildings and Walls, Pavements, and Other Structures	Field Density[2/12/]	Culverts: One test per each lift.
		Trenches: One test per lift for each increment or fraction of 152 lineal meters (500 linear feet) for backfill. Under pavements, one test every lift and at every crossing.

TABLE 1 (con.)

Materials	Test	Minimum Sampling and Testing Frequency
		Walls and Buildings Perimeters, Including Footings: One test per lift for each increment or fraction of 61 lineal meters (200 linear feet) of backfill. Buildings Slabs on Grade: One test per lift for each increment or faction of 93 square meters (1000 s.f.) Areas enclosed by grade beams, compacted with power driven hand operated compactors: One test per lift for each increment or fraction of 46 square meters (500 s.f.) Pavements: Two tests per lift for each increment or fraction of 1,672 square meters (2000 s.y.) Other Structures: One test per lift for each increment or fraction of 61 lineal meters (200 linear feet) of backfill.
	Lab Density3/	One test initially per each type of material or blended material and one every 10 field density tests.
	Gradation1/	One test per each type of material or blended material and one every 10 field density tests.
Subbase and Base	Gradation1/(including .02 mm particles size limits.	1 sample for every 3,345 square meters (4,000 sy.)
	In-Place Density2/ 12/	1 sample every 1,672 square meters (2,000 sy.)
	Moisture-Density Relationship3/	1 initially and every 20 density tests.

TABLE 1 (con.)

Materials	Test	Minimum Sampling and Testing Frequency
	Subgrade, Subbase, and Base for Rigid and Flexible Airfield Pavements and Heliports	
Subgrade and Fill or Embankment	In-Place Density[12/]	1 every 4,181 square meters (5,000 sy) (subgrade)
		1 every 1,911 cubic meters (2,500 cy) and 1 for each type of material or an apparent change in moisture. (Fill or embankment)
	Moisture-Density Relationship	1 every 20 density tests or if material type changes.
	Gradation[1/]	1 every moisture-density test.
	Moisture	1 for every density test.
	Atterberg Limit	1 for every moisture-density test.
Subbase and Base Material	In-Place Density[12/]	1 every 1,529 cubic meters (2,000 cy) per lift (1 per day min.). 1 every 2 inplace density tests.
	Gradation (and Fractured Faces if applicable)[1/]	
	Moisture-Density Relationship	1 every 20 density tests.
	Moisture	1 for every density test.
	Asphaltic and Portland Cement Concrete for Airfields	
	(See specifications for testing requirement)	
	Asphaltic Concrete and Pavements (Non airfield)	
Asphaltic concrete	Marshall method Test	1 test per day minimum and 1 per 907,200 kilograms (1,000 tons) thereafter.
	Specific Gravity	per each Marshall Test.
	Extraction	1 test for each Marshall Method.

TABLE 1 (con.)

Materials	Test	Minimum Sampling and Testing Frequency
	Gradation[5/]	1 per each extraction test.
	Fracture faces[5/]	1 per each extraction test.
Cored or sawed specimens	Perform complete test (thickness, in-place density and bulk specific gravity) on each cored or sawed sample.[12/]	Take 1 set of 3 cored sawed specimens for each 836 square meters (1,000 square yards) or fraction thereof. One specimen shall be taken from longitudinal joint or from transverse joint.
	Portland Cement Concrete (Non airfield)	
Coarse and Fine Aggregate[7/]	Moisture, specific gravity and absorption[8/]	1 initially.
	Gradation and fineness modules	1 every 191 cubic meters (250 cy) of concrete.
	Moisture, specific gravity and absorption[8/]	(same as coarse aggregate).
Concrete	Slump	Conduct test every day of placement and for every 19 cubic meters (25 cy) and more frequently if batching appears inconsistent. Conduct with strength tests.
	Entrained Air	Conduct with slump test.
	Ambient and concrete temperatures	Conduct with slump tests.
	Unit weight, yield, and water cement ratio	Conduct with strength tests. Check unit weight and adjust aggregate weights to insure proper yield.

TABLE 1 (con.)

Materials	Test	Minimum Sampling and Testing Frequency
	Flexural strength and evaluation	When specified for slabs on grade or for concrete pavements, take one set of 6 beams every 76 cubic meters (100 cy) of concrete with a minimum of 1 set per day. Two beams shall be tested at 7 days, two at 28 days, and two at 90 days.
	Compressive strength	One set of 3 cylinders per day and every 76 cubic meters (100 cy) for each class of structural concrete. Test one cylinder at 7 days and two at 28 days. Additional field cure cylinders shall be made when insitu strengths are required to be known.
Vibrators	Frequency and amplitude	Check frequency and amplitude initially and any time vibration is questionable.
	Masonry	
Concrete Masonry Units9/	Dry shrinkage10/	1 set of 3 per 10,000 units and manufacturers certification and test report.
	Airdry condition11/	Same as dry shrinkage.
	Absorption	" " " "
	Compressive strength	" " " "
	Unit Weight	" " " "
Mortar and grout	Compressive Strength	1 set of 3, every 2,000 units (1 test at 7 days and 2 tests at 28 days).

NOTES:

1/All acceptance tests shall be conducted from in-place samples.
2/Additional tests shall be conducted when variations occur due to the contractors operations, weather conditions, site conditions, etc.
3/Classification (ASTM D-2487), moisture contents, Atterberg limits and specific gravity tests shall be conducted for each compaction test if applicable.
4/Materials to be submitted only upon request by the Contracting Officer.
5/Tests can substitute for same tests required under "Aggregates" (from bins or source), although gradations will be required when blending aggregates.
6/Increase quantities by 50 percent for Paving mixes and by 100 percent for Government testing of admixtures. Include standard deviation for similar mixes from the intended batch plant and data from a minimum of 30 tests, if available. Refer to ACI 214.
7/A petrographic report for aggregate is required with the sample for source approval. If the total amount of all types of concrete is less than 153 cubic meters (200 c.y.) service records from three separate structures in similar environments which used the aggregates may substitute for the petrographic report.
8/Aggregate moisture tests are to be conducted in conjunction with concrete strength tests for w/c calculations.
9/For less than 1,000 units, the above test may be waived at the discretion of the Contracting Officer and acceptance based on manufacturers certification and test report.
10/Additional tests shall be performed when changes are made either in the manufacturing processes or in materials used in the production of the masonry units.
11/If adequate storage protection is not provided at the jobsite, additional tests shall be made to determine that the allowable moisture condition has not been exceeded before the blocks can be placed in the structure.
12/The nuclear densometer, if properly calibrated, may be used but only in addition to the required testing frequency and procedures using sandcones. The densometer shall be calibrated and is recommended for use when the time for complete results becomes critical.

TABLE 2

STANDARD REPORT FORMS AND USE

Form Number	Form Title	Form Use
NPD 300	Transmittal of Material Samples	Form to accompany any samples sent to NPD Laboratory
NPD 326	Compaction Test Data Sheet	Soil compaction tests.
DD 1206	Sieve Analysis Data	Sieve analysis data sheet for soils.
NPD 320	Mechanical Analysis Test Data	Sieve analysis data sheet and hydrometer data sheet for soils.
ENG 2087	Gradation Curves	Gradation graph for soils and aggregates. (To include specification limits).
DD 1205	Soil Moisture Content	Moisture content sheet for soils and/or aggregates.
NPD 322	Specific Gravity and Absorption Test Data Sheet	Specific gravity and absorption test for soil and aggregates.
DD 1209	Atterberg Limits Determinations	Test and graph for Atterburg limits tests.
DD 1217	Bituminous Mix Design -Aggregate Blending	Aggregate blending sheet for asphaltic concrete.
NPD 346	Asphaltic Concrete Mix Design Report	Asphaltic mix design and aggregate grinding.
DD 1218	Marshall Method - Computation of Properties of Asphalt Mixtures	Marshall Test form.
NPD 88	Screen Analysis of Concrete Aggregates	Gradation test form for aggregates (self carboning).
NPD 357	Mortar Strength of Fine Aggregate Data Sheet	Flexural and compressive strength test form for mortar.
NPD 355	Data Sheet - Compressive and Flexural Strengths of Concrete	Compressive and/or flexural strength testing (include averages per specification).
NPD 359	Report of Concrete Mixture Design	Mix design sheet for Contractor mix submittal.
NPS 57	Statistical Evaluation of Concrete Compression Tests	Summary sheet of concrete tests. Form can be used for flexural strengths if revised to conform with proper days specified. A separate sheet is to be used for each mix design.

(sample of typical Contractor's Daily Report)
DAILY CONSTRUCTION QUALITY CONTROL REPORT

Contract Number: _____ Date: _____ Rpt No._____

Contract Title: _____ Location: _____

Weather: Clear __ P.Cloudy __ Cloudy __ Rainfall __ (__% of workday)

Temperature during workday: High ____ degrees F. Low ___ degrees F.

1. WORK PERFORMED BY CONTRACTOR/SUBCONTRACTOR(S):

Contractor Name	No. of Workers	Crafts/Hours	Work performed

2. EQUIPMENT DATA:

Type, Size, Etc.	Owned/Rented	Hours Used	Hours Standby

3. QUALITY CONTROL INSPECTIONS AND RESULTS: (Include a description of preparatory, initial, and/or follow up inspections or meetings; check of subcontractors work and materials delivered to the site compared to submittals and/or specifications; comments on the proper storage of materials; include comments on corrective actions to be taken):

_____

_____

_____

_____

4. QUALITY CONTROL TESTING AND RESULTS (comment on tests and attach test reports):

_____

_____

_____

5. DAILY SAFETY INSPECTIONS (Include comments on new hazards to be added to the Hazard Analysis and corrective action of any safety issues):

_____

_____

6. REMARKS (Include conversations with or instructions from the Government representatives; delays of any kind that are impacting the job; conflicts in the contract documents; comments on change orders; environmental considerations; etc.):

_____

_____

_____

_____

_____

CONTRACTOR'S VERIFICATION: The above report is complete and correct. All material, equipment used, and work performed during this reporting period are in compliance with the contract documents except as noted above.

_____
CONTRACTOR QC REPRESENTATIVE

(Sample of Typical Contractor's Test Report)

TEST REPORT

STRUCTURE OR BUILDING _____

CONTRACT NO. _____

DESCRIPTION OF ITEM, SYSTEM, OR PART OF SYSTEM TESTED:
_____

_____

DESCRIPTION OF TEST: _____

_____

_____

NAME AND TITLE OF PERSON IN CHARGE OF PERFORMING TESTS FOR THE CONTRACTOR:

NAME_____

TITLE_____

SIGNATURE_____

I HEREBY CERTIFY THAT THE ABOVE DESCRIBED ITEM, SYSTEM, OR PART OF SYSTEM HAS BEEN TESTED AS INDICATED ABOVE AND FOUND TO BE ENTIRELY SATISFACTORY AS REQUIRED IN THE CONTRACT SPECIFICATIONS.

SIGNATURE OF CONTRACTOR
QUALITY CONTROL INSPECTOR_____

DATE_____

REMARKS
_____

_____

_____

END OF SECTION

SECTION 01501

CONSTRUCTION FACILITIES AND TEMPORARY CONTROLS

PART 1 GENERAL

1.1 AVAILABILITY OF UTILITY SERVICES

1.1.1 Water and Electricity

The Contractor shall be responsible for providing its own water and electricity.

1.2 SANITARY PROVISIONS

Contractor shall provide sanitary accommodations for the use of employees as may be necessary and shall maintain accommodations approved by the Contracting Officer and shall comply with the requirements and regulations of the State Health Department, County Sanitarian, or other authorities having jurisdiction.

1.3 TEMPORARY ELECTRIC WIRING

1.3.1 Temporary Power and Lighting

The Contractor shall provide construction power facilities in accordance with the safety requirements of the National Electric Code NFPA No. 70 and the SAFETY AND HEALTH REQUIREMENTS MANUAL EM 385-1-1. The Contractor, or its delegated subcontractor, shall enforce the safety requirements of electrical extensions for the work of subcontractors. Work shall be accomplished by journeyman electricians.

1.3.2 Construction Equipment

In addition to the requirements of SAFETY AND HEALTH REQUIREMENTS MANUAL, EM 385-1-1, temporary wiring conductors installed for operation of construction tools and equipment shall be either Type TW or THW contained in metal raceways, or shall be hard usage or extra hard usage multiconductor cord. Temporary wiring shall be secured above the ground or floor in a workmanlike manner and shall not present an obstacle to persons or equipment. Open wiring may only be used outside of buildings, and then only in accordance with the provisions of the National Electric Code.

1.3.3 Submittals

Submit detailed drawings of temporary power connections. Drawings shall include, but not be limited to, main disconnect, grounding, service drops, service entrance conductors, feeders, GFCI'S, and all site trailer connections.

1.4 FIRE PROTECTION

During the construction period, the Contractor shall provide fire extinguishers in accordance with the safety requirements of the SAFETY AND HEALTH REQUIREMENTS MANUAL, EM 385-1-1. The Contractor shall remove the fire extinguishers at the completion of construction.

1.5 STAGING AREA

Contractor will be provided adequate open staging area as shown on the drawings. Area is unsecured, and Contractor shall make provisions for its own security.

Contractor shall be responsible for keeping staging area, and office area clean and free of weeds and uncontrolled vegetation growth. Weeds shall be removed by pulling or cutting to within 1-inch of ground level. Lawn areas shall be mown to keep growth to less than 2-inches. All loose debris and material subject to being moved by prevailing winds in the area shall be picked up or secured at all times.

If the area is not maintained in a safe and clean condition as defined above the Contracting Officer may have the area cleaned by others with the costs being deducted from the Contractor's payment.

1.6 HOUSEKEEPING AND CLEANUP

Pursuant to the requirements of Clause CLEANING UP and Clause ACCIDENT PREVENTION, of the CONTRACT CLAUSES, the Contractor shall assign sufficient personnel to insure compliance. The Contractor shall submit a detailed written plan for implementation of this requirement. The plan will be presented as part of the preconstruction safety plan and will provide for keeping the total construction site, structures, and accessways free of debris and obstructions at all times. Work will not be allowed in those areas that, in the opinion of the Contracting Officer, have unsatisfactory cleanup and housekeeping at the end of the preceding day's normal work shift. At least once each day all areas shall be checked by the Quality Control person of the Contractor and the findings recorded on the Quality Control Daily Report. In addition, the Quality Control person shall take immediate action to insure compliance with this requirement. Housekeeping and cleanup shall be assigned by the Contractor to specific personnel. The name(s) of the personnel shall be available at the project site.

1.7 DIGGING PERMIT

Before performing any onsite excavation, the Contractor shall notify the installation facility manager and the appropriate local authorities as required to obtain a digging permit and clearances from all the various utilities. Copies of clearances shall be provided to the Government Representative. Utility lines shall be marked in the field prior to excavation. The locations of any utilities obtained from the clearances shall be verified on or added to the as-built drawings.

1.8 CONSTRUCTION NEAR COMMUNICATIONS CABLES

1.8.1 Excavation Near Communication Cables

Digging within 3 feet of communication cables (including fiber optic cables) shall be performed by hand digging until the cable is exposed. The Contracting Officer shall be notified a minimum 3 days prior to digging within a 3-foot area near cable. No digging shall be performed until the cable route is marked by the appropriate authorities. A digging permit shall be obtained by the Contractor before performing any excavation. The Contractor shall be held responsible for any damage to the cable by excavation procedures. Once the cable is exposed, mechanical excavation may be used if there is no chance of damage occurring to the cable.

1.8.2 Reburial of Exposed Utilities

When existing utility lines are reburied a tape, detectable by pipe detector systems, shall be installed above the uncovered length of the utility at a depth of 12 inches below grade. Tape shall be a minimum 5 mil

plastic tape with metallic tracer, minimum 3 inches wide, lettering on tape to show buried utility, and brightly colored.

1.8.3 Cable Cuts or Damage

If a communications cable is cut or damaged the Contractor shall immediately notify the Contracting Officer (CO) and begin gathering personnel and equipment necessary to repair the cut, or damage. Contractor shall begin repairs within one hour of the cut or damage, unless notified otherwise, and continue repairs without interruption until full service is restored.

1.9 PROJECT SIGN

Contractor shall furnish and install one project sign(s) in accordance with conditions hereinafter specified and layout shown on drawing No. 49s-40-05-15, Sheets 1 and 2, except Corps of Engineers' castle and Department of Air Force seal will be Government furnished. All letters shall be block type, upper case. Letters shall be painted as indicated using exterior-type paint. Sign shall be maintained in excellent condition throughout the life of job. Project sign shall be located as directed. Upon completion of project, sign shall be removed and shall remain the property of Contractor.

1.10 ELEVATED WORK AREAS

Workers in elevated work areas in excess of 6 feet above an adjoining surface require special safety attention. In addition to the provisions of SAFETY AND HEALTH REQUIREMENTS MANUAL, EM 385-1-1, the following safety measures are required to be submitted to the Contracting Officer's Representative. Prior to commencement of work in elevated work areas, the Contractor shall submit drawings depicting all provisions of a positive fall protection system including, but not limited to, all details of guardrails.

1.11 TRAFFIC CONTROL

The Contractor shall provide for movement of traffic through and around the construction zone in a manner that is conducive to the safety of motorists, pedestrians, and workers. This shall include placement and maintenance of traffic control devices in accordance with the U.S. Department of Transportation, Federal Highway Administration publication, Manual on Uniform Traffic Control Devices. Streets (except dead end) may be closed to traffic temporarily by approved written request to the Contracting Officer at least 10 working days prior to street closure. Street closures shall at all times allow street access to a building from one direction. Excavations shall not remain open for more than 1 working day without approval.

1.12 UTILITIES NOT SHOWN

The Contractor can expect to encounter, within the construction limits of the entire project, utilities not shown on the drawings and not visible as to the date of this contract. If such utilities will interfere with construction operations, the Contractor shall immediately notify the Contracting Officer verbally and then in writing to enable a determination by the Contracting Officer as to the necessity for removal or relocation. If such utilities are removed or relocated as directed, the Contractor shall be entitled to equitable adjustment for any additional work or delay. The types of utilities the Contractor may encounter are waterlines, sewer lines (storm and sanitary), gas lines, fueling lines, steam lines, buried fuel tanks, septic tanks, other buried tanks, communication lines, and power lines. These utilities may be active or abandoned utilities.

1.13 GOVERNMENT WITNESSING AND SCHEDULING OF TESTING

The Contractor shall notify the Contracting Officer, by serial letter, of dates and agenda of all performance testing of the following systems: electrical (including fire protection) not later than 10 calendar days prior to start of such testing. In this notification, the Contractor shall certify that all equipment, materials, and personnel necessary to conduct such testing will be available on the scheduled date and that the systems have been prechecked by the Contractor and are ready for performance and/or acceptance testing. Contractor shall also confirm that all operations and maintenance manuals have been submitted and approved. NO PERFORMANCE AND/OR ACCEPTANCE TESTING WILL BE PERMITTED UNTIL THE OPERATIONS AND MAINTENANCE MANUALS HAVE BEEN APPROVED.

Government personnel, at the option of the Government, will travel to the site to witness testing. If the testing must be postponed or canceled for whatever reason not the fault of the government, the Contractor shall provide the Government not less than 3 working days advance notice (notice may be faxed) of this postponement or cancellation. Should this 3 working day notice not be given , the Contractor shall reimburse the Government for any and all out of pocket expenses incurred for making arrangements to witness such testing including, but not limited to airline, rental car, meal, and lodging expenses. Should testing be conducted, but fail and have to be rescheduled for any reason not the fault of the Government, the Contractor shall similarly reimburse the Government for all expenses incurred.

1.14 HARD HAT SIGNS

The Contractor shall provide 24 by 24 inch square Hard Hat Area signs at each entry to the project or work area as directed by the Contracting Officer. A minimum of two signs will be required. Signs shall be in accordance with the sketch at the end of this section.

PART 2 PRODUCTS AND PART 3 EXECUTION (NOT APPLICABLE)

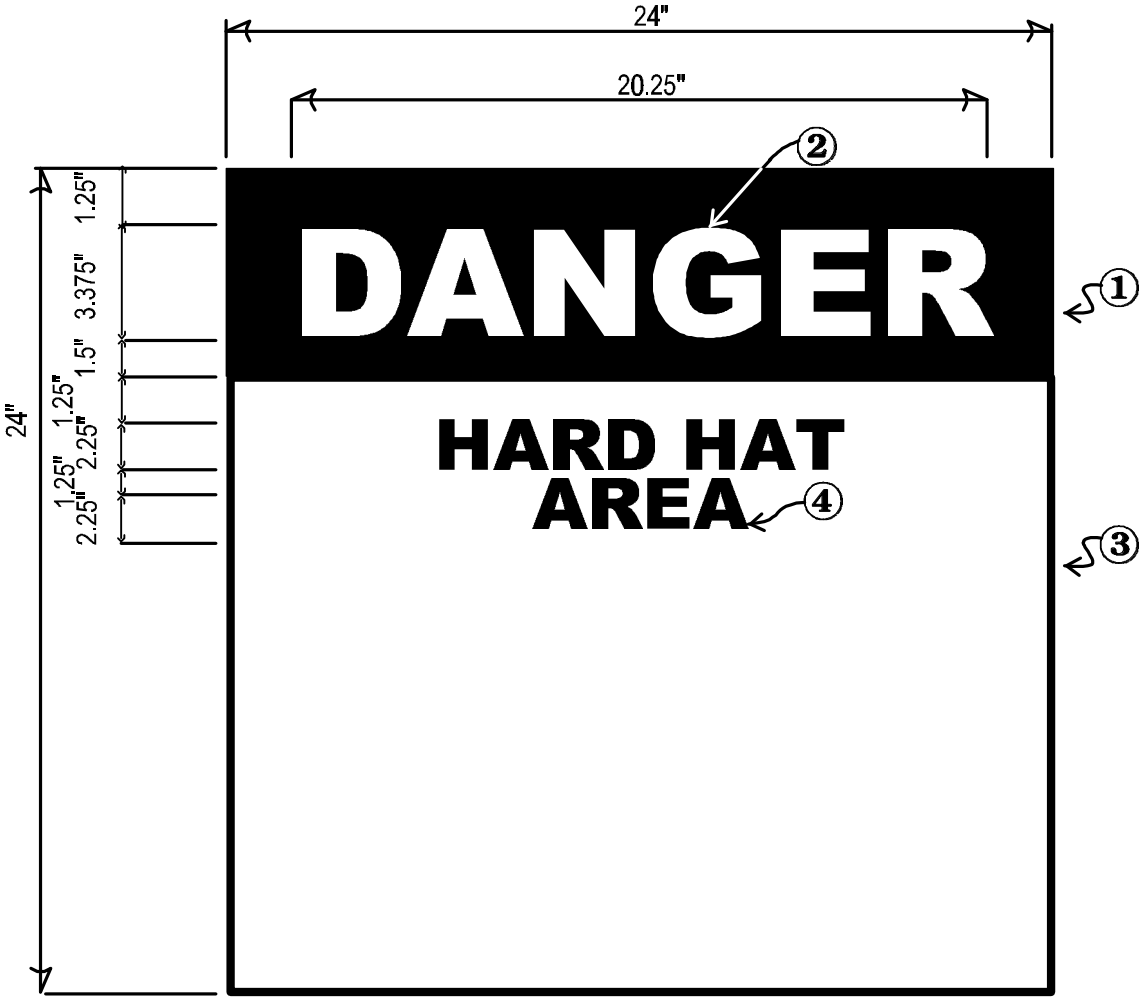

- SIGN SHALL BE FABRICATED FROM .125 THICK 6061-T6 ALUMINUM PANEL
- COLOR

1. SAFETY RED (SR)
2. WHITE
3. WHITE
4. BLACK

- LETTERING SHALL BE HELVETICA BOLD TYPOGRAPHY.
- LETTERS AND BACKGROUND SHALL BE REFLECTIVE SHEETING MATERIAL.
- SIGNS SHALL BE POSTED AT 6’-6” (BOTTOM SIGN TO GRADE) OR AS DIRECTED BY THE CONTRACTING OFFICER.
- LETTERING TO BE CENTERED ON PANEL.

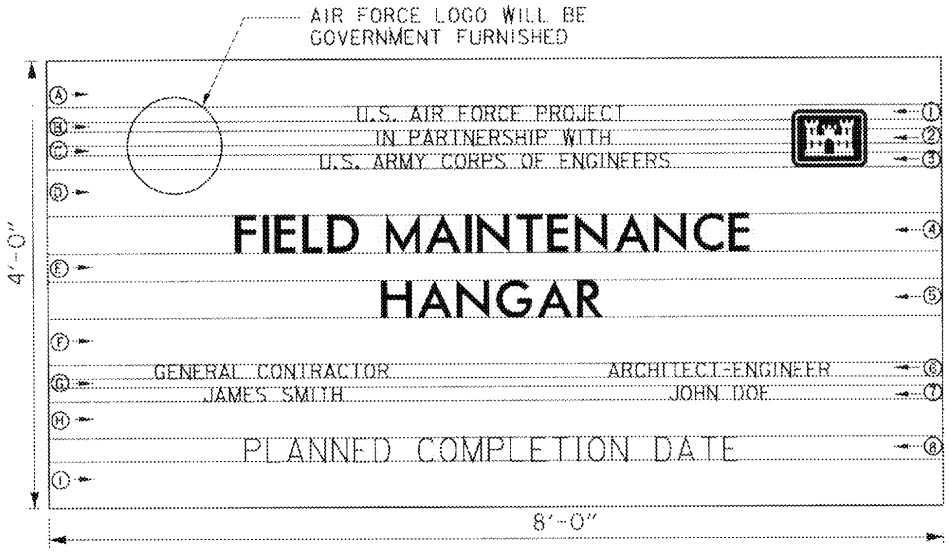

SAMPLE CONSTRUCTION SIGN FOR MILCON PROJECTS

SCHEDULE

SPACE	HEIGHT	LINE	DESCRIPTION	LETTER HEIGHT	STROKE
A	5"	1	U.S. AIR FORCE PROJECT	1½"	3/16"
B	1"	2	IN PARTNERSHIP WITH	1½"	3/16"
C	1"	3	U.S. ARMY CORPS OF ENGINEERS	1½"	3/16"
D	5"	4	PROJECT NAME	4"	½"
E	3"	5	PROJECT NAME CONT'S (IF REQUIRED)	4"	½"
F	5"	6	GENERAL CONTRACTOR/A-E	1½"	3/16"
G	1"	7	GENERAL CONTRACTOR/A-E	1½"	3/16"
H	4"	8	PLANNED COMPLETION DATE	2½"	¼"
I	5"				

U.S. AIR FORCE

PROJECT CONSTRUCTION SIGN

SHEET: 1 OF 2 SAMPLE AS SHOWN

U.S. ARMY ENGINEER DISTRICT, SEATTLE, WA

DR: L.T. DATE: 14 NOV 97

FILE NO: 495/40-05-15

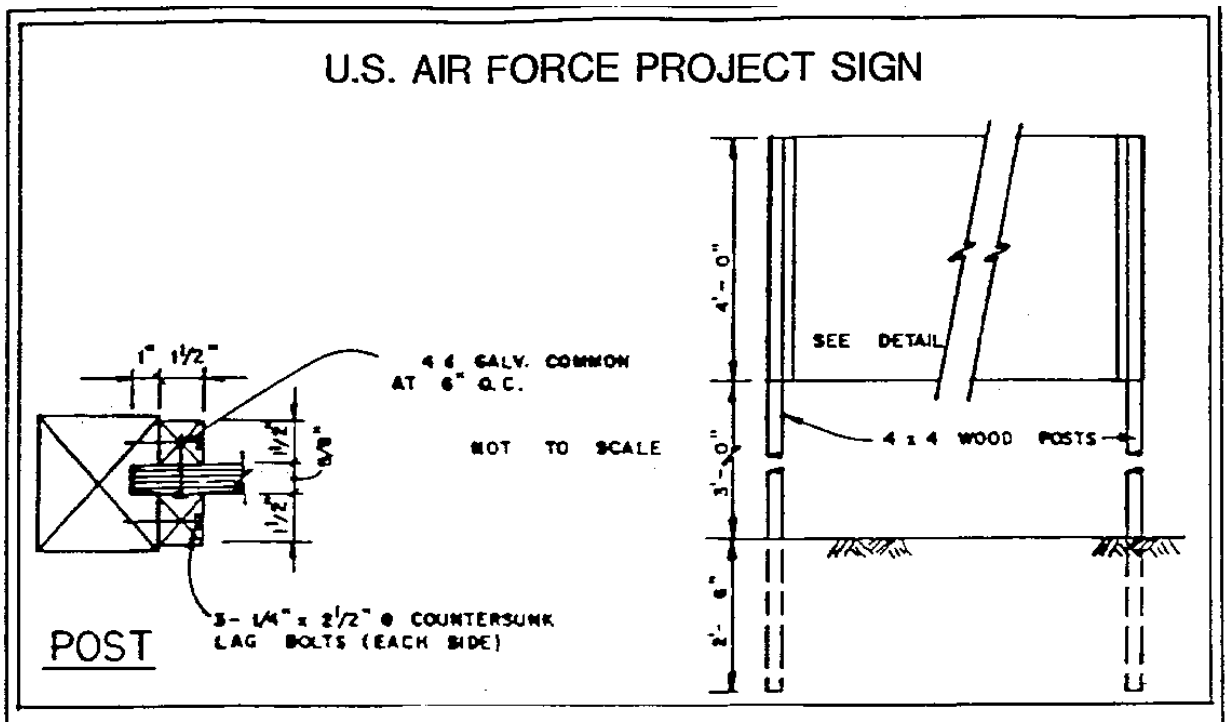

NOTES:

1. Signboard 4' x 8' x 5/8" grade A-C exterior type plywood with medium density overlay on both sides.

2. Paint both sides and edges with one prime coat and two coats of paint, accordance with FED. STD. 595b, color number dark brown 10055 exterior type enamel. Lettering shall be as shown on drawing and shall be FED. STD. 595b, color number white 17925 gloss exterior type enamel.

3. Lettering shall be Helvetica medium.

4. Acceptable abbreviations may be used for Contractor's name.

5. Department of Air Force Seal and Corps of Engineers' Castle to be Government furnished.

6. No company logo shall be used.

7. Sign posts and 1½" wood trim shall be painted white.

8. Upon completion of work under this contract, the project sign shall be removed from the job site and shall remain the property of the Contractor.

END OF SECTION

SHEET 2 OF 2

SECTION 01701

OPERATIONS AND MAINTENANCE MANUALS

PART 1 GENERAL

1.1 SUBMITTALS

Submittals shall be in accordance with SECTION 01300: SUBMITTALS.

PART 2 PRODUCTS (NOT APPLICABLE)

PART 3 EXECUTION

3.1 GENERAL

The Contractor shall provide Operation and Maintenance (O&M) manuals for the complete project as applicable under this contract, including all Contractor furnished and installed equipment, systems and materials, and all Government furnished-Contractor installed equipment, systems and materials. Included herein are requirements for compiling and submitting the O&M data. Additional O&M data requirements are specified in the individual sections of the technical specifications. O & M Manual requirements shall be coordinated with the requirements as stated in the other technical specification sections and shall include listings for spare parts, framed instructions, etc.

3.1.1 PREPARATION

Manual preparation shall be under the direction of an individual or organization that has demonstrated expertise and a minimum of 3 years experience in the preparation of comprehensive and complete O&M manuals. Qualifications shall be submitted for Contracting Officer approval.

3.1.2 O&M data shall be separated into distinct systems. O&M manuals for any particular system shall include narrative and technical descriptions of the interrelations with other systems. This narrative shall include a description on how the system works with notable features of the system, including normal and abnormal operating conditions. The explanation of the system is to be short and concise with reference to specific manufacturer's equipment manuals for details (see paragraph 4.3.4(b)). If the quantity of material is such that it will not fit within one binder then it shall be divided into volumes, as required (see paragraph Binders).

3.1.3 Six copies of the complete set of manuals shall be provided.

3.1.4 The requirement for six copies of the O&M manual shall supersede and replace any requirements for a lesser amount of manuals which may be indicated in some specifications. each set of manuals shall be tailored for its respective building or facility.

3.2 PRELIMINARY O&M MANUAL AND DATA SUBMITTAL

To establish and assure uniform O&M manual format, the Contractor shall submit and receive Contracting Officer approval on one (1) complete set of O&M data without the binders prior to submission of the final

bound manuals. Initial O&M Manual data submittal shall be a minimum of 30 days prior to 90 percent project completion.

The Contractor shall also provide two typewritten pages representing the proposed binder marking format as required under Paragraph: Marking and Binding. One page will represent the front cover/spine and the other page will represent the inside of the front cover.

3.2.1 Data submitted for the manual are to be for the specific equipment furnished, and are in addition to that furnished as shop drawings.

3.2.2 The Contracting Officer will require thirty (30) days for review of submitted O&M manual(s) or data. The Contracting Officer will retain one copy of unacceptable O&M manual submittal and return remainder of copies to the Contractor marked "Returned for Correction." If "Returned for Correction." the Contractor shall resubmit the required number of copies of the manual(s) incorporating all comments, prior to substantial completion and/or use and possession. The Contractor may, at his option, update the copy retained by the Government in lieu of providing the added copy.

3.2.3 For equipment or systems requiring personnel training and/or acceptance testing, the final O&M data shall be approved by the Contracting Officer prior to the scheduling of the training and/or testing. O&M data on equipment or systems not requiring training or testing shall be submitted so all data will be approved and bound in the O&M manuals in the required quantity by the time the project reaches 90 percent completion. Failure to furnish approved, bound manuals in the required quantity by the time the project is 90 percent complete, will be cause for the Contracting Officer to hold or adjust the retained percentage in accordance with CONTRACT CLAUSE, PAYMENTS UNDER FIXED PRICE CONSTRUCTION CONTRACTS.

3.2.4 Three of the six completed copies of the final O&M manuals (for each building) shall contain original manufacturer's data. Data in the remaining manuals may be duplicated copies of original data. All data furnished must be of such quality to reproduce clear, legible copies.

3.3 BINDERS

3.3.1 Construction and Assembly

Manuals shall be sliding posts or screw-type aluminum binding posts (three screws) with spine, but only one type shall be used for all manuals. The manuals shall be hardback plastic-covered, cleanable, not over three (3) inches thick and designed for 8-1/2 x 11 inch paper. The hard cover shall be of minimum stiffness equal to 0.080 inch display board or double weight illustration board.

3.3.2 Marking and Binding

As appropriate, systems shall be grouped into four separate categories and bound into four volumes as follows: Mechanical, Electrical, Fire Protection/Security, and Architectural/General.

Each binder shall have the following information, as a minimum, inscribed on both the spine and cover using an offset or silk screen printing process; "EQUIPMENT OPERATING, MAINTENANCE, AND REPAIR MANUAL;" BUILDING NAME, IDENTIFICATION NUMBER (Building No.), LOCATION, AND DISCIPLINE (MECHANICAL, ELECTRICAL, FIRE PROTECTION/SECURITY,

ARCHITECTURAL/GENERAL). Contractor's name and address as well as the contract title and contract number shall be printed on the inside of the front cover.

3.3.3 Color

Color of binder and printing shall be the option of the Contractor except that; (a) printing color shall contrast with binder color, and (b) colors shall be the same for all manuals.

3.3.4 Content

The O&M manuals shall be structured to address each of the following topics in order for each system. When the topic does not apply to a particular system the topic name will be included in the manual with the words "DOES NOT APPLY."

a. Warning Page: A warning page shall be provided to warn of potential dangers (if they exist), such as high voltage, toxic chemicals, flammable liquids, explosive materials, carcinogens, or high pressures. The warning page shall be placed inside the front cover, in front of the title page.

b. Index: Each manual shall have a master index at the front identifying all manuals and volumes and subject matter by system name for each. Following the master index, each manual shall have an index of its enclosures listing each volume, tab numbers, etc., as necessary to readily refer to a particular operating or maintenance instruction. Rigid tabbed fly leaf sheets shall be provided for each separate product and/or piece of equipment under each system in the manual. For example, if a system includes Air Handling Units 1 through 5, there shall be tab sheets AHU-1, AHU-2, AHU-3, AHU-4 and AHU-5. When a manual is divided into volumes, each volume shall have a master index at its front, followed by an index for the specific volume listing in detail all enclosed instructions for materials, individual pieces of equipment, and systems. All pages shall be numbered with the referenced number included in the index.

c. Description: Narrative and technical descriptions of the system and of the interrelations with other systems.

d. Check List Prior to Start Up: Precautions and prechecks prior to start up of equipment and/or system, including safety devices, monitoring devices and control sequence shall be provided.

e. Start Up and Operation: Step-by-step sequential procedures for start up and normal operation checks for satisfactory operation shall be provided. Safety precautions and instructions that should be followed during these procedures shall be incorporated into the operating instructions and flagged for the attention of the operator. Procedures shall include test, manual or normal, and automatic modes.

f. Shutdown: Procedures for normal and emergency shutdown of equipment and/or systems shall be provided. The instructions shall include any procedures necessary for placing the equipment and/or system on standby or preparing the equipment and/or system for start up at a later time. Procedures shall include test, manual or normal, and automatic modes.

g. Operator Preventive Maintenance, Major Maintenance, and Adjustments: The instructions shall include recommended operator preventive maintenance which would normally be performed by operating personnel and adjustment procedures necessary for normal operation. Schedules shall be provided indicating time frames or operating hours for initiating operator maintenance and adjustments, and including manufacturer's recommended major maintenance requirements. Emergency adjustments shall be

included and flagged for operator's attention; the instructions shall also include procedures for emergency repairs that could be performed by operating personnel. These emergency repairs or "trouble-shooting guides" shall be outlined in three columns with the following headings:

Column 1 - Trouble
Column 2 - Probable Cause(s)
Column 3 - Correction

h. Operator Data: The instructions shall include equipment and/or system layouts showing all piping, wiring, breakers, valves, dampers, controls, etc., complete with diagrams, schematics, isometrics, and data to explain the detailed operation and control of each individual piece of equipment and/or system, including system components. Layouts shall show the location within the facility of controls, valves, switches, dampers, etc., by reference to site location, wing designation, floor, room number, or other clear and concise directions for locating the item. Operator data may be identical to posted data and framed instructions but shall be prepared as part of the O&M manuals. All control systems operations data shall include the following:

(1) A fully labeled control schematic which details all set points, throttling ranges, actions, spans, proportional bands, and any other adjustment.

(2) A fully labeled elementary diagram (ladder diagram).

(3) A sequence of control on the diagrams cross-referenced to the control schematic and elementary diagram.

(4) A generic, functional description of each control component shown on the drawings.

(5) Catalog data of every control device.

i. Electrical Layout Drawings: The Electrical O&M's shall include complete layout drawings and one-line diagrams of exterior and interior electrical with reference to the buildings and site layout. Drawings shall include layout of interior lighting, interior power, intrusion detection systems, communication systems and fire protection systems. Exterior layout drawings shall show where fed from, pad-mount transformer, metering, main distribution panel and communication lines. Layout drawings shall show the location within the facility or reference to the building and the site plan. Layout drawings shall be half size contract as-built drawings and shall be inserted into plastic pockets and installed at the back of the O&M's that pertain to that particular drawing.

j. Maintenance Procedures: Recommended procedures shall indicate preventive maintenance, lubrication, and good housekeeping practices which should be performed by operating personnel as well as more complex maintenance procedures which would normally be performed by trained maintenance personnel only. The procedures shall be presented with a schedule indicating time frames or operating hours for specific maintenance to be accomplished. Safety precautions and instructions that should be followed during these procedures shall be incorporated into the maintenance procedures and flagged for the attention of personnel. The procedures shall include necessary operating instructions for taking equipment off line, putting equipment on line, or putting equipment on standby. The instructions shall include all necessary material, equipment, and system data to perform maintenance work and shall include, but not be limited to, manufacturers/bulletins, catalogs, and descriptive data; certified performance curves, copies of approved test plans, including logs and records of performance acceptance test results, and actual

adjustments made during final acceptance and inspection; system layouts, including block diagrams, wiring, control, and isometric diagrams: schematic items within the facility; and interrelationships with other items of system.

k. Repairs: Repair procedures shall be presented with a step-by-step procedure for locating and correcting the trouble. A "shop manual" may be used for this purpose. Repair procedures shall be keyed to a troubleshooting guide outlined in three columns with the following headings:

Column 1 - Trouble
Column 2 - Probable Cause(s)
Column 3 - Correction

The procedures shall clearly indicate a major repair activity which should only be performed in a shop or factory versus normal repair work that may be performed onsite or with equipment online. The procedures shall also clearly indicate the limit of repair work that may be performed by Government personnel during the warranty period without voiding warranty provisions. Safety precautions and instructions that should be followed during these procedures shall be incorporated into the repair procedures and flagged for the attention of personnel.

l. Tools: The Contractor shall provide one of each nonstandard tool, test instrument, and gauge necessary for performing maintenance and repair work. A nonstandard tool, test instrument, or gauge is defined as an item normally supplied by the manufacturer for the equipment operation or maintenance. The Contractor shall prepare a master list of such items for all equipment and systems and shall key maintenance and repair procedures to this list. The above referenced items for performing maintenance and repair work shall be provided for each individual facility of multifacility projects.

m. Parts and Supplies: A complete list of parts and supplies shall be provided with the maintenance instructions. The list shall include all parts and components of individual pieces of equipment, and all parts and components of each system and shall identify such items as description of part, model number, circuit or component identification, etc. Parts and supplies lists shall be included within each volume of maintenance instructions. Further, a master list of spare parts and supplies recommended from each manufacturer for 1 year of operation, including source of supply, shall be sublisted with each instruction.

(1) Availability: The Contractor shall list the sources of supply for all parts and supplies, including name of supplier/manufacturer, address, and telephone number. If the parts and supplies are not normally stocked locally, (within 6 hours travel time, round trip by surface transportation) necessary procurement time shall also be a part of the listing.

(2) Spare Parts: The Contractor shall provide those spare parts and supplies that are specified in the TECHNICAL SPECIFICATIONS and those which are normally provided with the equipment or material item. A separate master list shall be provided for these items upon turnover to the Government of the parts and supplies.

n. Maintenance Schedule: A separate schedule of all required periodic maintenance shall be included. This schedule shall list by frequency of occurrence all lubricants and special adjustments required. The types and amounts of lubrication must be specified. The Contractor shall verify that the furnished maintenance schedule agrees with the published manufacturer's
data.

3.3.4.1 Architectural/General O&M:

(1) Building Products, Applied Materials, and Finishes: Include product data, with catalog number, size, composition, and color and texture designations. Provide information for re-ordering custom manufactured products. Data shall include, but not be limited to, information on carpet, floor tile, vinyl wall finishes, builder's hardware, etc.

(2) Instructions for Care and Maintenance: Include manufacturer's recommendations for cleaning agents and methods, precautions against detrimental agents and methods, and recommended schedule for cleaning and maintenance.

(3) Moisture-protection and Weather-exposed Products: Include product data listing applicable reference standards, chemical composition, and details of installation. Provide recommendations for inspections, maintenance, and repair.

(4) Additional Requirements: As specified in individual specifications sections.

3.3.4.2 Warranties:

In addition to the general warranty required by the contract, the O&M manuals shall include any specific warranties required by other sections of the TECHNICAL SPECIFICATIONS and other warranties normally provided with the particular piece of equipment or system. Extended warranties normally provided by manufacturers that are beyond the warranty of construction shall be specifically noted. The O&M manuals shall also include a specific warranty section itemizing all standard and extended warranty items. The warranty list shall be as indicated below. Warranties will not begin until the facility is accepted by the Contracting Officer. Copy of warranty shall be included in the manual.

WARRANTY INFORMATION

Project Title
Contract Number

General Contractors Name, Phone Number

ITEM DESCRIPTION	START DATE	END DATE	O & M REFERENCE LOCATION
(in alphabetical order)			
Descriptive Name, Manufacturers/ Warrantors Name Address & Phone No.			

3.3.4.3 Installed Equipment Lists:

A copy of the completed Equipment in Place forms required in SECTION 01705: EQUIPMENT-IN-PLACE LIST shall be included in the manual. The completed forms shall be located at the front of the catalog and O&M data for the equipment listed on the form.

3.3.4.4 Data Layout:

(1) Data Identification: Catalog data shall be marked to clearly identify pertinent data by highlighting the data with pointers or crossing out all nonpertinent data.

(2) Drawings: All drawings bound in the manuals shall be of such size that will require only one fold made right to left. All larger size drawings shall be inserted into a separate pocket in the required location in the manual. All drawings shall be of microfilm quality.

(3) Posted Data: The Contractor shall provide posted data for equipment or systems, in addition to O&M manuals, and as required by other Technical Specifications sections. The data shall consist of as-built schematics of all wiring, controls, piping, etc., as necessary for the operation of the equipment or system, and a condensed typewritten description of the system. The posted data may include approved shop drawings, layout drawings, riser, and block diagrams and shall indicate all necessary interrelation with other equipment and systems. The data may be presented in one or several frames, under glass or sheet acrylic glazing, for clarity and convenience of location. The framed data presentation and outline shall be acceptable to and posted at locations designated by the Contracting Officer. The data shall be posted before personnel training or performance testing acceptance for the related items of equipment or system.

(4) Framed Instructions: Typewritten instructions, framed under glass or sheet acrylic glazing, explaining equipment or system prestart checkout, startup, operations and shutdown procedures, safety precautions, preventive maintenance procedures, and normal operation checks for satisfactory performance of the equipment of systems shall be posted in conjunction with the posted data. The framed instructions may be presented in one or several frames for clarity and convenience of location. The instruction presentation and outline shall be acceptable to the Contracting Officer prior to posting, and shall be posted at locations designated by the Contracting Officer. All framed instructions shall be posted before personnel training or performance testing acceptance commences for the related item of equipment or system.

3.3.5 Payment

No separate payment will be made for the preparation and submittal of O&M manuals. All costs incurred by the Contractor in the preparation and submittal of O&M manuals shall be considered as part of the price for the equipment and included in the contract price. Approval and acceptance of the final O&M manuals shall be accomplished before final payment is made to the Contractor.

3.3.6 Checklist

Contractor shall complete and initial a copy of the O&M Manual Check List which is provided at the end of this section, and forwarded along with ENG form 4025 as part of the O&M Manual submittal to the Contracting Officer for approval.

O&M MANUAL - REVIEW CHECKLIST

__ Does the manual cover all equipment furnished under the contract? (Review against equipment schedules on the drawings and/or equipment submittals.)

__ Does the manual clearly highlight all relevant portions or cross out all irrelevant portions ofcatalog data?

__ Does the manual contain operations data for the equipment? (Step-by-step operating instructions, start up procedures, sequences of operation, precautions.)

__ Does the manual contain maintenance and repair data for the equipment? (Lubrication, dismantling, assembly, adjustment, troubleshooting.)

__ Does the manual contain a separate maintenance schedule listed by frequency of occurrence?

__ Does the manual contain parts lists or parts catalogs for the equipment? Parts catalog or list shall contain identification, part numbers, recommended parts to be stocked, and local source of parts.

____ Does the manual contain electrical connection diagrams?

__ Does the manual contain control and interlock system diagrams where applicable?

__ Is every page in the manual numbered and an index provided for ready reference to the data?

__ Is the cover hard (nonflexible) with the facility name, identification number, location, and system embossed on both the spine and cover? Is the Contractor's name and address, and the contract title and contract number embossed on the inside of the manual cover?

__ Is the binding screw posts or sliding post?

__ Is any of the data in the manual under the binding where it cannot be seen?

__ Do three sets of manuals contain all original data sheets and are others clearly legible?

__ Are system layout drawings provided? (Simplified diagrams for the system as installed.)

__ Are all drawings in the manual of such a size that requires one fold right to left, or if a larger size drawing, then inserted into a pocket in the manual?

Note that the above are common requirements to all contracts. Check the specific contract for additional information.

END OF SECTION

SECTION 01702

AS BUILT RECORDS AND DRAWINGS

PART 1 GENERAL

1.1 SUBMITTALS

Data listed in PART 3 of this section shall be submitted in accordance with section 01300 SUBMITTALS. Due dates shall be as indicated in applicable paragraphs and all submittals shall be completed before final payment will be made.

PART 2 PRODUCTS (NOT APPLICABLE)

PART 3 EXECUTION

3.1 AS-BUILT FIELD DATA

3.1.1 General

The Contractor shall keep at the construction site two complete sets of full size blueline prints of the contract drawings, reproduced at Contractor expense, one for the Contractor's use, one for the Government. During construction, both sets of prints shall be marked to show all deviations in actual construction from the contract drawings. The color red shall be used to indicate all additions and green to indicate all deletions. The drawings shall show the following information but not be limited thereto:

a. The locations and description of any utility lines and other installations of any kind or description known to exist within the construction area. The location includes dimensions and/or survey coordinates to permanent features.

b. The locations and dimension of any changes within the building or structure, and the accurate location and dimension of all underground utilities and facilities.

c. Correct grade or alignment of roads, structures, and utilities if any changes were made from contract plans.

d. Correct elevations if changes were made in site grading from the contract plans.

e. Changes in details of design or additional information obtained from working drawings specified to be prepared and/or furnished by the Contractor including, but not limited to, fabrication erection, installation, and placing details, pipe sizes, insulation material, dimensions of equipment foundations, etc.

f. The topography and grades of all drainage installed or affected as part of the project construction.

g. All changes or modifications from the original design and from the final inspection.

h. Where contract drawings or specifications allow options, only the option actually used in the construction shall be shown on the as-built drawings. The option not used shall be deleted.

These deviations shall be shown in the same general detail utilized in the contract drawings. Marking of the prints shall be pursued continuously during construction to keep them up to date. In addition, the Contractor shall maintain full size marked-up drawings, survey notes, sketches, nameplate data, pricing information, description, and serial numbers of all installed equipment. This information shall be maintained in a current condition at all times until the completion of the work. The resulting field-marked prints and data shall be referred to and marked as "As-Built Field Data," and shall be used for no other purpose. They shall be made available for inspection by the Contracting Officer's representative whenever requested during construction and shall be jointly inspected for accuracy and completeness by the Contracting Officer's representative and a responsible representative of the Contractor prior to submission of each monthly pay estimate. Failure to keep the As-Built Field Data (including Equipment-in-Place lists) current shall be sufficient justification to withhold a retained percentage from the monthly pay estimate.

3.1.2 Submittal of the As-Built Field Data

Two sets of the As-Built Field Data shall be submitted to the Contracting Officer for review and approval a minimum of 20 calendar days prior to the date of final inspection. If review of the preliminary as-built drawings reveals errors and/or omissions, the drawings will be returned to the Contractor for corrections. The Contractor shall make all corrections and return the drawings for backcheck to the Contracting Officer within 10 calendar days of receipt. When submitted drawings are accepted, one set of marked drawings will be returned to the Contractor for the completion of the as-built drawings.

3.2 AS-BUILT ELECTRONIC FILE DRAWINGS

3.2.1 No earlier than 30 days after award the Government will have available for the Contractor one set of AutoCAD electronic file format contract drawings, to be used for preparation of as-built drawings. The electronic file drawings will be available on either 3-1/2 inch 1.44 MB floppy disks or ISO-9660 CD-ROM, as directed by the Contracting Officer. The Contractor has 15 days after the receipt of the electronic file to verify the usability of the AutoCAD files, and bring any discrepancies to the attention of the Contracting Officer. Any discrepancies will be corrected within 15 days and files returned to the Contractor**.** The Contractor shall incorporate all deviations from the original contract drawings as recorded in the approved 'As-built Field Data' (see paragraph 3.1.2). All revisions and changes shall be incorporated, i.e. items marked "deleted" shall be deleted, new items shall have no clouds, etc. .

3.2.2 No later than 30 days after final acceptance a complete set of as-built drawings shall be submitted in AutoCAD electronic file format. . The electronic file format, layering standards and submittal requirements are specified in paragraphs below. The as-built drawings shall be done in a quality equal to that of the originals. Line work, line weights, lettering, and use of symbols shall be the same as the original line work, line weights, and lettering, and symbols. If additional drawings are required they shall be prepared in electronic file format under the same guidance. When final revisions have been completed, each drawings shall be identified with the words "AS-BUILT" in block letters at least 3/8-inch high placed above the title block if space permits, or if not, below the title block between the border and the trim line. The date of completion and the words "REVISED AS-BUILT" shall be placed in the revision block above the latest revision notation.

3.2.3 Electronic File Submittal Requirements

3.2.3.1 The AutoCAD electronic file(s) deliverable shall be in AutoCAD release 14 'DWG' binary format. All support files required to display or plot the file(s) in the same manner as they were developed shall be delivered along with the files. These files include but are not limited to Font files, Menu files, Plotter Setup, and Referenced files.

3.2.3.2 Layering shall conform to the guidelines defined by the American Institute of Architects (AIA) standard document, "CAD Layer Guidelines", Copyright 1990. An explanatory list of which layer is used at which drawing and an explanatory list of all layers which do not conform to the standard AIA CAD Layer Guidelines, including any user definable fields permitted by the guidelines shall be provided with each submittal.

3.2.3.3 Electronic File Deliverable Media: All electronic files shall be submitted on ISO 9660 format CD-ROM. Two complete sets of disks shall be submitted along with one complete set of prints taken from the disks. Each disk shall have a clearly marked label stating the Contractor's firm name, project name and location, submittal type (AS-BUILT), and date. Each submittal shall be accompanied by a hard copy transmittal sheet that contains the above information along with a tabulated information about each file, as shown below:

Electronic File Name	Plate Number	Drawing Title

Electronic version of the table shall be included with each submittal set of disks.

3.2.4 Submittal of the Final As-Built Drawings

The final as-built record drawings shall be completed and returned together with the approved preliminary as-built drawings to the COE, Seattle District Office, Survey Branch, Engineering Records, within 30 calendar days of final acceptance. All drawings from the original contract drawing set shall be included, including the drawings where no changes were made. The Government will review all final as-built record drawings for accuracy and conformance to the drafting standards and other requirements contained in DIVISION 1 GENERAL REQUIREMENTS. The drawings will be returned to the Contractor if corrections are necessary. The Contractor shall make all corrections and shall return the drawings to the same office within 7 calendar days of receipt.

3.3 All costs incurred by the Contractor in the preparation and furnishing of as-built drawings in electronic file format shall be included in the contract price and no separate payment will be made for this work. Approval and acceptance of the final as-built record drawings shall be accomplished before final payment is made to the Contractor.

3.4 One set of marked-up as-built blueline prints shall be furnished at the time of system acceptance testing. These as-built blueline prints shall be in addition to the submittals of marked-up as-built blueline prints specified elsewhere in the contract.

END OF SECTION

SECTION 01703

WARRANTY OF CONSTRUCTION

PART 1 GENERAL

1.1 SUBMITTALS

Submittals shall be made in accordance with SECTION 01300: SUBMITTALS. Submittal dates shall be as defined in PART 3 of this section.

PART 2 PRODUCTS (NOT APPLICABLE)

PART 3 EXECUTION

3.1 WARRANTY OF CONSTRUCTION (APR 1984) (FAR52.246-21):

3.1.1 In addition to any other warranties in this contract, the Contractor warrants, except as provided in paragraph 3.1.9 of this Clause, that work performed under this contract conforms to the contract requirements and is free of any defect in equipment, material, or design furnished, or workmanship performed by the Contractor or any subcontractor or supplier at any tier.

3.1.2 This warranty shall continue for a period of 1 year from the date of final acceptance of the work. If the Government takes possession of any part of the work before final acceptance, this warranty shall continue for a period of 1 year from the date the Government takes possession.

3.1.3 The Contractor shall remedy at the Contractor's expense, any failure to conform, or any defect. In addition, the Contractor shall remedy, at the Contractor's expense, any damage to Government-owned or controlled real or personal property, when that damage is the result of:

a. the Contractor's failure to conform to contract requirements or

b. any defect of equipment, material, workmanship, or design furnished.

3.1.4 The Contractor shall restore any work damaged in fulfilling the terms and conditions of this clause. The Contractor's warranty with respect to work repaired or replaced will run for 1 year from the date of repair or replacement.

3.1.5 The Government will notify the Contractor, in writing or by telephone, after the discovery of any failure, defect, or damage and the Contractor shall respond and be on-site to correct the problem within 1 working day after notification. The Contractor shall furnish, and maintain, a 24 hour emergency telephone number as the point of contact. For failures, defects, or damage causing loss of power or heat, the Contractor shall respond within 4 hours.

3.1.6 If the Contractor fails to remedy any failure, defect, or damage within a reasonable time as determined by the Government, after receipt of notice, the Government will have the right to replace, repair, or otherwise remedy the failure, defect, or damage at the Contractor's expense.

3.1.7 With respect to all warranties, express or implied, from subcontractors, manufacturers, or suppliers for work performed and materials furnished under this contract, the Contractor shall:

a. obtain all warranties that would be given in normal commercial practice;

b. require all warranties to be executed, in writing, for the benefit of the Government, if directed by the Contracting Officer; and

c. enforce all warranties for the benefit of the Government, if directed by the Contracting Officer.

3.1.8 In the event the Contractor's warranty under paragraph 3.1.2 of this clause has expired, the Government may bring suit at its expense to enforce a subcontractor's, manufacturer's, or supplier's warranty.

3.1.9 Unless a defect is caused by the negligence of the Contractor or subcontractor or supplier at any tier, the Contractor shall not be liable for the repair of any defects of material or design furnished by the Government nor for the repair of any damage that results from any defect in Government-furnished material or design.

3.1.10 This warranty shall not limit the Government's rights under the Inspection and Acceptance clause of this contract with respect to latent defects, gross mistakes, or fraud.

3.1.11 After final acceptance of the work, the Contractor shall furnish and install an Equipment Warranty Sticker on Contractor-installed equipment. Lettering shall be block-type upper case and easily readable. Sticker shall be of a durable type material and of a type that can be written on. Sticker shall state the following:

a. The title "Equipment Warranty."

b. Contractor's name and Contract Number.

c. Date warranty expires.

d. Point of contact, including name and telephone number.

e. Manufacturer.

END OF SECTION

SECTION 01704

FORM 1354 CHECKLIST

PART 1 GENERAL

1.1 Procedures

The form which is a part of this specification section shall be completed for any project having revisions to real property. The following page contains the basic instructions applicable to the form.

1.2 Submittal

This form shall be submitted for approval, and be approved a minimum of 30 days before final inspection of the project. Failure to have this form completed and approved in time for the final inspection will result in delay of the inspection until the checklist is completed.

PARTS 2 AND 3 NOT USED

INSTRUCTIONS FOR DD FORM 1354 CHECKLIST

The following checklist is only a guide to describe various parts of new and modified construction. Alter this form as necessary or create your own document to give complete accounting of the real property added or deleted for this contract. All items added, deleted, replaced, or relocated within the building 5 foot line, or on site 5 feet beyond the building perimeter must be accounted for completely. Only a few of the most common items beyond the 5 foot line are included on the checklist under UTILITIES/SURFACE CONSTRUCTION, add additional items as required by the construction accomplished.. Attach a continuation sheet and use the checklist format to describe other work related to this particular project. Listed on the last page are additional items with units of measure and descriptive terms.

Costs for each item must include material, tax, installation, overhead and profit, bond and insurance costs. This form should be filled out as each item is installed or each phase of work is completed.

TOTAL FOR ALL ITEMS INCLUDING CONTRACT MODIFICATION COSTS ADDED TOGETHER SHOULD EQUAL THE TOTAL CONTRACT PRICE.

KEY TO ABBREVIATIONS

AC - Acres
BL - Barrels, Capacity
BTU - British Thermal Unit
CY - Cubic Yards
EA - Each
GA - Gallons, Capacity
HD - Head
KV - Kilovolt-Amperes, Capacity (KVA)
KW - Kilowatts, Capacity
SE - Seats
SF - Square Feet
SY - Square Yard
MB - Million British Thermal Units
MI - Miles
LF - Linear Feet
KG - Thousand Gallons Per Day, Capacity
TN - Ton
- Number; How Many

DD FORM 1354 CHECKLIST
Transfer of Real Property

CONTRACT NUMBER:_____

CONTRACT TITLE:_____

LOCATION:_____

1. **DEMOLITION** (Describe each item removed and the cost of removal.)*

2. **RELOCATION** (Describe each item relocated and the cost of relocation.)*

3. **REPLACEMENTS** (Describe each item replaced and replacement cost.)*

*Use a continuation sheet if more space is required. Items should be described by quantity and the correct unit of measure.

4. **NEW CONSTRUCTION OVERVIEW: BUILDING(S)/ADDITION(S) TO A BUILDING** - Use a separate checklist for each building and/or addition.

(1) **Outside Dimensions: Length x Width**

(a) Main Building_____
(b) Offsets_____
(c) Wings_____
(d) Basement_____
(e) Attic_____

(2) **Number of Usable Floors**: _____

(3) **Construction: Exterior Materials Used**

(a) Foundation (such as concrete)_____
(b) Floors (such as wood, concrete)_____
(c) Walls (such as wood siding, metal, CMU)_____
(d) Roof (such as metal, comp., built-up)_____

(4) **Utilities ENTERING Building**: Measure LF from Bldg entry to next larger size of pipe

(a) Water (size & type of pipe; number of LF)_____
(b) Gas (size & type of pipe; number of LF)_____
(c) Sewer (size & type of pipe; number of LF)_____
(d) Electric (phase, voltage, size & type of wire, connected load in amps_____

(5) **Air Conditioning**:

(a) Type_____
(b) Capacity (TONS)_____
(c) SQ YDS covered by system_____

(6) **Heating**:

(a) Source_____
(b) Fuel_____

(7) **Hot Water Facilities**:

(a) Capacity (GAL)_____
(b) Temperature Rise_____

BUILDING COST:_____

5. **BUILDING SYSTEMS (INTERIOR)**

A. **FIRE PROTECTION**:
Property Code
(1) (880 50/880-211) CLOSED HEAD AUTO SPRINKLERS - SF & HD (wet or dry pipe; # of LF of service pipe; type of pipe & # of heads; # of SF covered by system)
DESCRIPTION:
_____
_____
_____
COST: _____

(2) (880 50/880-212) OPEN HEAD DELUGE SYSTEM - SF & HD (# of LF of service pipe; type of pipe; # of heads; # of SF covered)
DESCRIPTION:
_____
_____
_____
COST: _____

(3) (880 10/880-221) AUTO FIRE DETECTION SYSTEM - SF & EA (# of alarms-horns, bells, etc.; # of smoke detectors; # of heat detectors; # of fire alarm panels; # of radio transmitters/antennae)
DESCRIPTION:
_____
_____
_____
COST: _____

(4) (880 20/880-222) MANUAL FIRE ALARM SYSTEM - EA (# of pull stations; # of alarm horns; # of fire extinguisher cabinets)
DESCRIPTION:
_____
_____
_____
COST: _____

(5) (880 60/880-231) CO2 FIRE SYSTEM (# of bottles & size of bottles in lbs)
DESCRIPTION:

_____
_____
_____

COST: _____

(6) (880 60/880-232) FOAM FIRE SYSTEM - EA (# of tanks - capacity in lbs)
DESCRIPTION:

_____
_____
_____

COST: _____

(7) (880 60/880-233) OTHER FIRE SYSTEM - EA
DESCRIPTION:

_____
_____
_____

COST: _____

(8) (880 60/880-234) HALON 1301 FIRE SYSTEM - EA (# of bottles & size of bottles in lbs)
DESCRIPTION:

_____
_____
_____

COST: _____

B. **SECURITY**:

(1) (880 40/872-841) SECURITY ALARM SYSTEM - EA (name of system installed)
DESCRIPTION:

_____
_____
_____

COST: _____

C. **HEATING/COOLING SYSTEMS**

(1) (826 10/890-126) A/C WINDOW UNITS - TN & SF-(# of units installed; amount of SF covered per unit; size & capacity of each unit)
DESCRIPTION:

_____
_____
_____

COST: _____

(2) (826 14/890-125) A/C PLT LESS THAN 5 TN - TN & SF-(# of TN; # of SF covered)
DESCRIPTION:
_____
_____
COST: _____

(3) (826 13/890-121) A/C PLT 5 TO 25 TN - TN-(# of TN; # of SF covered)
DESCRIPTION:
_____
_____
_____
COST: _____

(4) (826 12/826-122) A/C PLT 25 TO 100 TN - TN-(# of TN; # of SF covered)
DESCRIPTION:
_____
_____
_____
COST: _____

(5) (826 11/826-123) A/C PLT OVER 100 TN - TN-(# of TN; # of SF covered)
DESCRIPTION:
_____
_____
_____
COST: _____

(6) (821 33/821-115) HEATING PLT 750/3500 MB - MB-(# of MBH; type of heating system - Ex: Warm air furnace, central)
DESCRIPTION:
_____
_____
_____
COST: _____

(7) (821 32/821-116) HEATING PLT OVER 3500 MB - MB-(# of MBH; type of heating system)
DESCRIPTION:
_____
_____
COST: _____

(8) (811 60/811-147) ELEC EMERGENCY POWER GENERATOR-KW-(size of engine; rating of generator in kilowatts & voltage)
DESCRIPTION:
_____
_____
_____
COST: _____

(9) (81190 or 82320-gas) STORAGE TANK FOR HEATING or GENERATOR FUEL-GA; TYPE; FUEL-(Size, type of tank, kind of fuel & # of gallons)
DESCRIPTION:
_____
_____
_____
COST: _____

SITE WORK

6. **UTILITIES/SURFACE CONSTRUCTION**:

(1) (812 41/812-223) PRIM DISTR LINE OH-LF-(# LF of wire; size & type of wire; # of poles; voltage)
DESCRIPTION:
_____
_____
_____
COST: _____

(2) (812/81360) TRANSFORMERS-KVA
POWER POLES-LF
(# poles; # transformers - pad or pole mounted; KVA of wire; # LF of wire)
DESCRIPTION:
_____
_____
_____
COST: _____

(3) (812 40/812-224) SEC DISTR LINE OH-LF-(voltage; size & type of wire; # transformers; KVA; # LF of wire; # of service drops; # poles)
DESCRIPTION:
_____
_____
_____
COST: _____

(4) (812 42/812-225) PRIM DISTR LINE UG-LF-(KVA; voltage; type of conduit & size(encased or direct burial); size & kind of wire inside conduit; LF of wire & conduit)
DESCRIPTION:
_____
_____
_____
COST: _____

(5) (812 42/812-226) SEC DISTR LINE UG-LF-(type of conduit & size; type & size of wires in conduit; LF of conduit & wire inside conduit; voltage)
DESCRIPTION:

_____
_____
_____

COST: _____

(6) (812 30/812-926) EXTERIOR LIGHTING-EA-(streets or parking area lights) (# & type of lights; whether pole mounted or not; # LF of connecting wire if pole mounted)
DESCRIPTION:

_____
_____
_____

COST: _____

(7) (824 10/824-464) GAS MAINS-LF(size, type, & # of LF of pipe)
DESCRIPTION:

_____
_____
_____

COST: _____

(8) (831 90/831-169) SEWAGE SEPTIC TANK-KG-(size, kind of material, & capacity)
DESCRIPTION:

_____
_____
_____

COST: _____

(9) (832 10/832-266) SANITARY SEWER-LF-(sizes & types of pipes - # of LF of each; # of cleanouts; # & size of manholes)
DESCRIPTION:

_____
_____
_____

COST: _____

(10) (842 10/842-245) WATER DISTR MAINS (POTABLE)-LF-(# LF & size, type of pipe)
DESCRIPTION:

_____
_____
_____

COST: _____

(11) (843 11/843-315) FIRE HYDRANTS-EA-(#; size & type)
DESCRIPTION:
_____
_____
_____
COST: _____

(12) (851 90/851-143) CURBS & GUTTERS-LF-(# LF; material; width & height)
DESCRIPTION: (Is curb extruded or standard?)_
_____
_____
_____
COST: _____

(13) (851 90/851-145) DRIVEWAY-SY-(SY; material used; thickness)
DESCRIPTION:
_____
_____
_____
COST: _____

(14) (851 10/12/851-147) ROAD-SY & LF-(SY; material used; thickness; LF)
DESCRIPTION:
_____
_____
_____
COST: _____

(14) (85210/11 /852-262) VEHICLE PARKING-SY-(SY; material used; thickness; # of bollards; # of wheel stops; # of regular parking spaces; # of handicap spaces)
DESCRIPTION:
_____
_____
_____
COST: _____

(15) (852 20/852-289) SIDEWALKS-SY & LF-(# SF & LF; dimensions of each section & location; thickness; material used)
DESCRIPTION:
_____
_____
_____
COST: _____

(16) (871 10/871-183) STORM DRAIN DISPOSAL-LF-(# LF of pipe; sizes & types of pipe; # of catch basins & manholes & sizes of each)
DESCRIPTION:
_____
_____
_____
COST: _____

(17) (872 15/872-247) FENCE, SECURITY (ARMS)-LF-(# of LF; fence material; # & type of gate(s); # strands of barbed wire on top)
DESCRIPTION:
_____
_____
_____
COST: _____

(18) (87210/12/872-248) FENCE, INTERIOR-LF-(# of LF; fence material; # & kind of gate(s)
DESCRIPTION:
_____
_____
_____
COST: _____

(19) (890 70/890-187) UTILITY VAULT(4 or more transformers)- SF(# SF; dimensions of vault; # of xfmers)
DESCRIPTION:
_____
_____
_____
COST: _____

(20) (135 10/135-583) TEL DUCT FACILITY-LF-(# of LF; size & type of conduit; type of wire)
DESCRIPTION:
_____
_____
_____
COST: _____

(21) (135 10/135-586) TEL POLE FACILITY-LF-(# LF & type of wire; # of poles)
DESCRIPTION:
_____
_____
_____
COST: _____

7. **INSTALLED EQUIPMENT**: Furnish an Equipment-In-Place List. Any price related to equipment should already be included in this checklist.

8. **SYSTEMS NOT PREVIOUSLY LISTED**: Attach a separate sheet and use the same format to describe the system(s). Example: CATV system, intercom system, or other utilities and surface construction not described on this checklist.

9. **ASBESTOS REMOVAL**: Furnish a description by building of the number of LF of asbestos removed, number of LF of reinsulation, number of SF of soil encapsulation, and number and size of tanks, etc., where asbestos was removed. Also, identify buildings by their numbers and use.

10. **MAINTENANCE/RENOVATIONS**: List by building number and describe all additions and deletions by quantity and the correct unit of measure. Furnish a cost per building.

UTILITIES/SURFACE CONSTRUCTION - Listed below are some additional items which may or may not apply to your contract. EACH item installed on site should be listed and priced separately even if not included on this checklist.

(1) IRRIGATION SYSTEM-(LF of pipe; size & type of pipe; number and type of heads)
(2) UNDERGROUND/ABOVEGROUND STORAGE TANKS-(GA, type of tank; material stored)
(3) (833-354) DUMPSTER ENCLOSURE-(SF & dimensions)
(4) (890-152) UNLOADING PAD-(SY; material)
(5) SIGNAGE-(Dimensions; material)
(6) (12580) CATHODIC PROTECTION-(MI; LF)
(7) (87270 LIGHTNING PROTECTION-(LF)
(8) (81290) POLE DUCT RISER-(LF, type of material)
(9) RAMPS-(SF, material; CY if concrete-use code for sidewalk if concrete)
(10) (89080/890-158) LOAD AND UNLOAD PLATFORM-(SF)
(11) (83240/832-255) INDUSTRIAL WASTE MAIN-(LF)
(12) WHEEL STOPS-(EA; size & material)
(13) (81350) OUTDOOR INTEGRAL DISTR CTR-(KVA)
(14) (45110) OUTDOOR STORAGE AREA-(SF)
(15) (73055/730-275) BUS/WAIT SHELTER-(SF)
(16) (690-432) FLAGPOLE-(EA; dimensions)
(17) (93210) SITE IMPROVEMENT-(JOB)
(18) (93220) LANDSCAPE PLANTING (Acre; EA; SF)
(19) (93230) LANDSCAPE BERMS/MOUNDS-(SY)
(20) (93410) CUT AND FILL-(CY)
(21) (843-315) FIRE HYDRANTS-(EA; Type)
(22) (14970) LOADING AND UNLOADING DOCKS AND RAMPS (not connected to a Bldg)-(SF) (23) BICYCLE RACK-(EA)
(24) (85140/812-928) TRAFFIC SIGNALS-(EA)
(25) (87210) FENCING OR WALLS-(LF)
(26) (15432) RIPRAP-(LF & SY)
(27) (75061) GRANDSTAND OR BLEACHERS-(EA; SE)
(28) 87150/871-187) RETAINING WALLS-(LF; SY; material)

NOTE: 5 Digit Codes-Army; 6 Digit Codes-Air Force

END OF SECTION

SECTION 01705

EQUIPMENT-IN-PLACE LIST

PART 1 GENERAL

1.1 SUBMITTALS

Data listed in PART 3 of this section shall be submitted in accordance with section 01300 SUBMITTALS. Due dates shall be as indicated in applicable paragraphs and all submittals shall be completed before final payment will be made.

PART 2 PRODUCTS (NOT APPLICABLE)

PART 3 EXECUTION

3.1 Submittal:

The final equipment-in-place list shall be completed and returned to the Contracting Officer within 30 calendar days of the final inspection. The Contracting Officer will review all final Equipment-In-Place Lists for accuracy and conformance to the requirements contained in DIVISION 1 - GENERAL REQUIREMENTS. The lists shall be returned to the Contractor if corrections are necessary. The Contractor shall make all corrections and shall return the lists to the Contracting Officer within 7 calendar days of receipt.

3.2 EQUIPMENT-IN-PLACE LIST:

Contractor shall submit for approval, at the completion of construction, a list of equipment-in-place. This list shall be updated and kept current throughout construction, and shall be jointly inspected for accuracy and completeness by the Contracting Officer's representative and a responsible representative of the Contractor prior to submission of each monthly pay estimate. A sample form showing minimum data required is provided at the end of this section. The EQUIPMENT-IN-PLACE LIST shall be comprised of all equipment falling under one or more of the following classifications:

a. Each piece of equipment listed on the mechanical equipment schedules.
b. Each electrical panel, switchboard, and MCC panel.
c. Each transformer.
d. Each piece of equipment or furniture designed to be movable.
e. Each piece of equipment that contains a manufacturer's serial number on the name plate.
f. All Government furnished, Contractor installed equipment per a. through e. (price data excluded)

The equipment listed above shall be entered in the RMS CQC Module furnished by the Government under the “Installed Property” menu selection.

3.3 PAYMENT:

All costs incurred by the Contractor in the preparation and furnishing of Equipment-In-Place Lists shall be included in the contract price and no separate payment will be made for this work. Approval and acceptance of the final Equipment-In Place Lists shall be accomplished before final payment is made to the Contractor

3.4 RMS CQC SOFTWARE MODULE

The Contractor is required to use the RMS CQC Software module to manage the above required Equipment - In - Place data. See specification section 01400 - CONTRACT0R QUALITY CONTROL, paragraph 3.12, IMPLEMENTATION OF GOVERNMENT RESIDENT MANAGEMENT SYSTEM FOR CONTRACTOR QUALITY CONTROL OF CONTRACT.

EQUIPMENT-IN-PLACE LIST

CONTRACT NO.: _____

Specification Section: _____ Paragraph No. _____

ITEM DESCRIPTION: _____

Item Name: _____

Serial Number: _____

Model Number: _____

Capacity: _____Replacement Cost _____

ITEM LOCATION:

Building Number: _____ Room Number: _____

or Column Location: _____

MANUFACTURER INFORMATION:

Manufacturer Name: _____

Trade Name (if different from item name): _____

Manufacturer's Address: _____

_____

Telephone Number: _____

WARRANTY PERIOD: _____

CHECKED BY: _____

END OF SECTION

SECTION 02050

DEMOLITION

1 GENERAL

1.1 REFERENCES

The publications listed below form a part of this specification to the extent referenced. The publications are referred to in the text by basic designation only.

ENGINEERING MANUALS (EM)

EM 385-1-1	(1992) U.S. Army Corps of Engineers Safety and Health Requirements Manual

1.2 GENERAL REQUIREMENTS

The work includes demolition and removal of metal shelter, reinforced concrete slabs and footings, metal utility poles along with concrete curb and gutter, asphalt concrete pavement and removal of resulting rubbish and debris. Rubbish and debris shall be removed from Government property daily, unless otherwise directed, to avoid accumulation at the demolition site. Materials that cannot be removed daily shall be stored in areas specified by the Contracting Officer. In the interest of occupational safety and health, the work shall be performed in accordance with EM 385-1-1, Section 23, Demolition, and other applicable Sections. In the interest of conservation salvage shall be pursued to the maximum extent possible; salvaged items and materials shall be disposed of as specified.In the interest of conservation salvage shall be pursued to the maximum extent possible; salvaged items and materials shall be disposed of as specified.

1.3 SUBMITTALS

Government approval is required for submittals with a "GA" designation; submittals having an "FIO" designation are for information only. The following shall be submitted in accordance with Section 01330, "SUBMITTAL PROCEDURES".

SD-08 Statements

Work Plan; GA.

The procedures proposed for the accomplishment of the work. The procedures shall provide for safe conduct of the work, including procedures and methods to provide protection of property or equipment which is to remain undisturbed, coordination with other work in progress, and timely disconnection of utility services. The procedures shall include a detailed description of the methods and equipment to be used for each operation, including recycling of asphalt and demolition and removal of shed, concrete slabs, and the sequence of operations in accordance with EM 385-1-1.

Recycled Asphalt Report; GA.

For the option of using recycled asphalt concrete as an admixture into the subbase course, the Contractor shall submit specific product descriptions and quantities. Included for recycled asphalt shall be place of origin, description of item, contract reference or type of submittal, unit of measurement, and quantity. This information shall be submitted formally on AF Form 66, Schedule of Material Submittals for base managed contracts and on ENG FORM 4025 for Corps of Engineers managed contracts.

1.4 DUST CONTROL

The amount of dust resulting from demolition shall be controlled to prevent the spread of dust to occupied areas adjacent to demolition activity and avoid creation of a nuisance in the surrounding area. Use of water will not be permitted when it will result in, or create, hazardous or objectionable conditions such as ice, flooding and pollution.

1.5 PROTECTION

1.5.1 Protection of Existing Property

Before beginning any demolition work, the Contractor shall survey the site and examine the drawings and specifications to determine the extent of the work. The Contractor shall take all necessary precautions to avoid damage to existing items to remain in place, to be reused, or to remain the property of the Government; any damaged items shall be repaired or replaced as approved by the Contracting Officer. The Contractor shall coordinate the work of this section with all other work and shall construct and maintain shoring, bracing, and supports, as required.

1.5.2 Protection of Trees

Trees within the construction limits which might be damaged during demolition and grading and which are not indicated to be removed shall be protected at all times. Any tree designated to remain that is damaged during the work under this contract shall be replaced in kind.

1.6 BURNING

The use of burning at the project site for any reason will not be permitted.

1.7 USE OF EXPLOSIVES

Use of explosives will not be permitted.

1.8 #.1 AVAILABILITY OF WORK AREAS

Refer to the civil plates for delineation of construction limits. Any optional bid items awarded will increase the limits of construction under base bid.

2 PRODUCTS (NOT APPLICABLE)

3 EXECUTION

3.1 EXISTING STRUCTURES

Curbs and gutters, Reinforced concrete slabs and footings, metal shed and metal utility poles shall be removed as indicated.

3.2 UTILITIES

When utility lines are encountered that are not indicated on the drawings, the Contracting Officer shall be notified prior to further work in that area.

3.3 DISPOSITION OF MATERIAL

Title to all material and equipment to be demolished and removed, except Government salvage and historical items, is vested in the Contractor when the equipment or material to be demolished is removed from Government property. The Government will not be responsible for the condition, loss or damage to such property after notice to proceed.

3.3.1 Salvageable Material

Contractor shall salvage material to the maximum extent possible.

3.3.1.1 Material Salvaged for the Contractor

Material salvaged for the Contractor shall be stored as approved by the Contracting Officer and shall be removed from Government property before completion of the contract. Material salvaged for the Contractor shall not be sold on the site.

3.3.2 Unsalvageable Material

Concrete, masonry, and other noncombustible material shall be disposed of in a legal disposal area located outside of Government property.

3.3.3 Solid Waste Disposal

Inert and demolition waste shall be removed from the site. Disposal disposition documents shall be provided to the Contracting Officer at project completion. Disposal shall conform to applicable (Federal, State, and Local) solid waste disposal system criteria.

3.4 CLEAN-UP

Debris shall be removed and transported in a manner that prevents spillage on streets or adjacent areas. Local regulations regarding hauling and disposal shall apply.

END OF SECTION

This page intentionally blank

SECTION 02210

GRADING

1 GENERAL

1.1 REFERENCES

The publications listed below form a part of this specification to the extent referenced. The publications are referred to in the text by basic designation only.

AMERICAN SOCIETY FOR TESTING AND MATERIALS (ASTM)

ASTM C 117	(1995) Test Method for Materials Finer Than 75 micrometer (um) (No. 200) Sieve in Mineral Aggregates by Washing
ASTM C 136	(1996) Method of Sieve Analysis of Fine and Course Aggregates
ASTM D 422	(1963, R1990) Test Method for Particle-Size Analysis of Soils
ASTM D 1556	(1990, R 1996) Density of Soil In Place by the Sand-Cone Method
ASTM D 1557	(1991) Moisture Density Relations of Soils and Soil Aggregate Mixtures Using a 4.54-kilogram (kg) (10-lb) Rammer and 457-millimeters (mm) (18-inch) Drop. Laboratory Compaction Characteristics of Soil Using Modified Effort (56,000 ft-lbf/cu. ft. (2,700 kN-m/cu.m.))
ASTM 2167	(1994) Density and Unit Weight of Soil In-Place by the Rubber Balloon Method
ASTM D 2216	(1992) Laboratory Determination of Water (Moisture) Content of Soil and Rock
ASTM D 2217	(1985) Wet Preparation of Soil Samples for Particle Size Analysis and Determination of Soil Constants
ASTM D 2487	(1993) Standard Classification of Soils for Engineering Purposes (Unified Soil Classification System)
ASTM D 2922	(1991) Density of Soil and Soil-Aggregate in Place by Nuclear Methods (Shallow Depth)
ASTM D 3017	(1996) Water Content of Soil and Rock in Place by Nuclear Methods (Shallow Depth)

ASTM D 4318 (Rev A, 1995) Liquid Limit, Plastic Limit and Plasticity Index of Soils

1.2 DEFINITIONS

1.2.1 Satisfactory Materials

Materials classified in ASTM D 2487 as SP, GW, GP, and SW, and free from roots and other organic matter, trash, debris, and frozen materials and stones larger than 6 inches in any dimension are satisfactory. Materials classified as SM, GP-GM, SP-SM, GM, or GC are also satisfactory provided that they contain moisture contents suitable for the intended use. Dark brown to black silty gravels with organics are satisfactory only for use as final backfill in open turfed or seeded areas, provided they contain moisture contents suitable for the intended use.

1.2.2 Unsatisfactory Materials

Materials which do not comply with the requirements for satisfactory materials are unsatisfactory. Materials classified in ASTM D 2487 as PT, OH, and OL are unsatisfactory. Unsatisfactory materials also include man-made fills, refuse, or backfills from previous construction or having moisture contents which are not suitable for the intended use.

1.2.3 Cohesionless and Cohesive Materials

Cohesive materials include materials classified as GC, SC, ML, CL, MH, and CH. Cohesionless materials include materials classified in ASTM D 2487 as GW, GP, SW, and SP. Materials classified as GM and SM will be identified as cohesionless only when the fines are nonplastic. Determination of grain size for classification shall be made in conformance with ASTM C 117, ASTM C 136, or ASTM D 422.

1.2.4 Degree of Compaction

Degree of compaction is a percentage of the maximum density obtained by the test procedure presented in ASTM D 1557 abbreviated as a percent of laboratory maximum density.

1.3 SUBMITTALS

The following shall be submitted in accordance with Section 01330: SUBMITTAL PROCEDURES:

SD-09 Reports

Rock for Slope Protection; GA

Borrow MaterialGA

Field In-place Density Tests; GA

1.4 #.1 SUBSURFACE DATA

Subsurface soil exploration logs are shown on the drawings. This data represents the best subsurface information available; however, variations may exist in the subsurface between exploration locations.

2 PRODUCTS

2.1 BORROW MATERIAL

Borrow material shall be selected to meet requirements and conditions of the particular fill for which it is to be used.

2.1.1 Selection

Borrow materials shall be obtained from sources outside the limits of Government-controlled land. Borrow materials shall be subject to approval. The source of borrow material shall be the Contractor's responsibility.

3 EXECUTION

3.1 EXCAVATION

Excavation of every description, regardless of material encountered, within the grading limits of the project shall be performed to the lines and grades indicated. Foundation materials under buildings and structures shall not be disturbed by heavy construction equipment or other traffic that may cause pumping or rutting of the foundation materials below indicated finished grade. Satisfactory excavated materials stockpiled for later use shall be covered to prevent change in moisture content. Satisfactory excavation material shall be transported to and placed in fill areas within the limits of the work. All unsatisfactory material including any soil which is disturbed by the Contractor's operations or softened due to exposure to the elements and water and surplus material shall be disposed of outside the limits of Government-controlled land. In the event that it is necessary to remove unsatisfactory material to a depth greater than specified, the Contracting Officer shall be notified and an adjustment in the contract price will be considered in accordance with the contract. Excavations carried below the depths indicated, without specific directions, shall, except as otherwise specified, be refilled to the proper grade with satisfactory material as directed. All additional work of this nature shall be at the Contractor's expense. Excavation and filling shall be performed in a manner and sequence that will provide drainage at all times. Excavations shall be kept free from water while construction therein is in progress. Material required for fills in excess of that produced by excavation within the grading limits shall be obtained from borrow areas.

3.2 BACKFILL ADJACENT TO STRUCTURES

Backfill adjacent to structures shall be placed and compacted uniformly in such manner as to prevent wedging action or eccentric loading upon or against the structures slopes bounding or within areas to be backfilled shall be stepped or serrated to prevent sliding of the fill. During backfilling operations and in the formation of embankments, equipment that will overload the structure in passing over and compacting these fills shall not be used. Backfill for storm drains and sub drains, including the

bedding and backfill for structures other than culverts and drains, shall conform to the additional requirements in other applicable sections.

3.3 PREPARATION OF GROUND SURFACE FOR FILL

All vegetation, such as roots, brush, heavy sods, heavy growth of grass, and all decayed vegetable matter, rubbish, and other unsatisfactory material within the area upon which fill is to be placed, shall be stripped or otherwise removed before the fill is started. In no case will unsatisfactory material remain in or under the fill area. Sloped ground surfaces steeper than one vertical to four horizontal on which fill is to be placed shall be plowed, stepped, or broken up, as directed, in such manner that the fill material will bond with the existing surface. Prepared surfaces on which compacted fill is to be placed shall be wetted or dried as may be required to obtain the specified moisture content and density.

3.4 FILLS AND EMBANKMENTS

Fills and embankments shall be constructed at the locations and to lines and grades indicated. The completed fill shall conform to the shape of the typical sections indicated or shall meet the requirements of the particular case. Satisfactory material obtained during excavation may be used in forming required fill. All fill shall be satisfactory material and shall be reasonably free from roots, other organic material, and trash and from stones having a maximum diameter greater than 6 inches. No frozen material will be permitted in the fill. Stones having a dimension greater than 4 inches3 inches shall not be permitted in the upper 6 inches of fill or embankment. The material shall be placed in successive horizontal layers of 9 inches in loose depth for the full width of the cross section and shall be compacted as specified. Each layer shall be compacted before an overlaying lift is placed. Moisture content of the fill or backfill material shall be adjusted by wetting or aerating, as required.

3.5 FINISHED EXCAVATION, FILLS, AND EMBANKMENTS

All areas covered by the project, including excavated and filled sections and adjacent transition areas, shall be uniformly smooth-graded. The finished surface shall be reasonably smooth, compacted, and free from irregular surface changes. The degree of finish shall be that ordinarily obtainable from blade-grader operations, except as otherwise specified. The surface of areas to be turfed shall be finished to a smoothness suitable for the application of turfing materials. For subgrade areas to be paved, the following shall be accomplished as required: (a) soft or otherwise unsatisfactory material shall be removed up to a depth of 30 inches measured from top of subgrade elevation and replaced with satisfactory excavated material or other approved materials; (b) low areas resulting from removal of unsatisfactory material shall be brought up to required grade with satisfactory materials, and the entire subgrade shall be shaped to line, grade, and cross section and shall be compacted as specified in Section 02225, EARTHWORK FOR ROADWAYS AND PARKING LOTS.

3.6 FIELD TESTING CONTROL

Field testing of fill to be placed within pavement areas shall be the responsibility of the Contractor and shall be performed by a Corps of Engineers approved commercial testing laboratory. Field density and moisture content tests shall be performed on every 5000 square feet of each

8 inch maximum lift placed. Field in-place density shall be determined in accordance with ASTM D 1556.

3.7 PROTECTION

Newly graded areas shall be protected from traffic and from erosion, and any settlement or washing away that may occur from any cause, prior to acceptance, shall be repaired and grades re established to the required elevations and slopes. All work shall be conducted in accordance with the environmental protection requirements of the contract.

END OF SECTION

SECTION 02221

EXCAVATION, FILLING AND BACKFILLING FOR BUILDINGS

1 GENERAL

1.1 REFERENCES

The publications listed below form a part of this specification to the extent referenced. The publications are referred to in the text by basic designation only.

AMERICAN SOCIETY FOR TESTING AND MATERIALS (ASTM)

ASTM D 1556	(1990) Density and Unit Weight of Soil in Place by the Sand-Cone Method
ASTM D 1557	(1991) Laboratory Compaction Characteristics of Soil Using Modified Effort (56,000 ft-lbf/cu. ft. (2,700 kN-m/cu. m.))
ASTM D 2167	(1994) Density and Unit Weight of Soil in Place by the Rubber Balloon Method
ASTM D 2216	(1992) Laboratory Determination of Water (Moisture) Content of Soil, and Rock
ASTM D 2487	(1992) Classification of Soils for Engineering Purposes (Unified Soil Classification System)
ASTM D 2922	(1991) Density of Soil and Soil-Aggregate in Place by Nuclear Methods (Shallow Depth)
ASTM D 3017	(1988) Water Content of Soil and Rock in Place by Nuclear Methods (Shallow Depth)

1.2 DEFINITIONS

1.2.1 Degree of Compaction

Degree of compaction required is expressed as a percentage of the maximum density obtained by the test procedure presented in ASTM D 1557 abbreviated hereinafter as percent laboratory maximum density.

1.3 SUBMITTALS

The following shall be submitted in accordance with Section 01300 SUBMITTAL DESCRIPTIONS:

SD-09 Reports

Field Density Tests; GA

Testing of Backfill Materials; GA

Copies of all laboratory and field test reports within 24 hours of the completion of the test.

Soil Treatment Agent; GA

Certifications, material safety data sheets and manufacturers instructions, before application of the soil treatment agent. A copy of the pesticide label, certification, and application plan including rates of application shall be submitted 15 days before application of the soil treatment agent.

2 PRODUCTS

2.1 MATERIALS

2.1.1 Satisfactory Materials (Structural Fill)

Satisfactory materials include materials classified in ASTM D 2487 as SP-SM, SP, GW, GP, SW, GP-GM and shall be free of trash, debris, roots or other organic matter, or stones larger than 3 inches in any dimension. Materials classified as SM or GM are satisfactory provided they contain water contents suitable for their intended use. The dark brown to black silty gravels with organics are suitable for use only in open, seeded or turfed areas provided the moisture contents are suitable for the intended use.

2.1.2 Unsatisfactory Materials

Unsatisfactory materials include materials classified in ASTM D 2487 as PT, OH, OL, the black silty gravels as shown on the exploration logs and any other materials not defined as satisfactory.

2.1.3 Cohesionless and Cohesive Materials

Cohesionless materials include materials classified in ASTM D 2487 as GW, GP, SW, and SP. Cohesive materials include materials classified as GC, SC, ML, CL, MH, and CH. Materials classified as GM and SM will be identified as cohesionless only when the fines are nonplastic.

2.2 CAPILLARY WATER BARRIER

Capillary Water Barrier shall consist of clean, crushed, nonporous rock, crushed gravel, or uncrushed gravel. The maximum particle size shall be 1-1/2 inches and no more than 2 percent by weight shall pass the No. 4size sieve.

2.3 #.1 SOIL TREATMENT AGENT

Soil treatment agent shall be as directed by appropriate MACOM entomologist and label shall bear evidence of registration under the Federal Insecticide and Rodenticide Act.

3 EXECUTION

3.1 CLEARING AND GRUBBING

The areas within lines 5 feet outside of each building and structure line shall be cleared and grubbed of trees, stumps, roots, brush and other vegetation, debris, existing foundations, pavements, utility lines,

structures, fences, and other items that would interfere with construction operations. Stumps, logs, roots, and other organic matter shall be completely removed and the resulting depressions shall be filled with satisfactory material, placed and compacted in accordance with paragraph FILLING AND BACKFILLING. Materials removed shall be disposed of outside the limits of Government-controlled property at the Contractor's responsibility.

3.2 TOPSOIL

Topsoil shall be stripped to a depth of 6 inches below existing grade within the designated excavations and grading lines and deposited in storage piles for later use. Excess topsoil shall be disposed as specified for excess excavated material.

3.3 EXCAVATION

Excavation shall conform to the dimensions and elevations indicated for each building, structure, and footing except as specified hereinafter, and shall include trenching for utilities to a point 5 feetbeyond the building line of each building and structure, excavation for outside grease interceptors, underground fuel tanks, and all work incidental thereto. Unsatisfactory materials shall be removed beneath structures, and slabs to a depth of 6 feet below existing grade, unless noted otherwise on contract drawings, and replaced with satisfactory materials. Remove up to a maximum depth of from the top of subgrade all unsatisfactory materials below pavement areas and replace with satisfactory material. Excavation shall extend a sufficient distance from walls and footings to allow for placing and removal of forms. Excavations below indicated depths will not be permitted except to remove unsatisfactory material. Unsatisfactory material encountered below the grades shown shall be removed as directed and replaced with satisfactory material. Payment therefor will be made in conformance with the CHANGES clause of the CONTRACT CLAUSES. Satisfactory material removed below the depths indicated without specific direction of the Contracting Officer shall be replaced at no additional cost to the Government to the indicated excavation grade with satisfactory materials, except that concrete footings shall be increased in thickness to the bottom of the overdepth excavations. Satisfactory material (structural fill) shall be placed and compacted as specified in paragraph FILLING AND BACKFILLING. Determination of elevations and measurements of approved overdepth excavation of unsatisfactory material below grades indicated shall be done under the direction of the Contracting Officer.

3.4 DRAINAGE AND DEWATERING

3.4.1 Drainage

Surface water shall be directed away from excavation and construction sites so as to prevent erosion and undermining of foundations. Diversion ditches, dikes and grading shall be provided and maintained as necessary during construction. Excavated slopes and backfill surfaces shall be protected to prevent erosion and sloughing. Excavation shall be performed so that the site and the area immediately surrounding the site and affecting operations at the site shall be continually and effectively drained.

3.4.2 Dewatering

Groundwater flowing toward or into excavations shall be controlled to prevent sloughing of excavation slopes and walls, boils, uplift and heave in the excavation and to eliminate interference with orderly progress of construction. French drains, sumps, ditches or trenches will not be permitted within 3 feetof the foundation of any structure, except with specific written approval, and after specific contractual provisions for restoration of the foundation area have been made. Control measures shall be taken by the time the excavation reaches the water level in order to maintain the integrity of the in situ material. While the excavation is open, the water level shall be maintained continuously, at least 2 feet below the working level. Ground water shall not be permitted to accumulate in excavations and shall be dewatered by pumping or other satisfactory methods to prevent detrimental effects to proper construction procedures. Disposal of pumped ground water shall be by pumping into a Contractor-designed dry well or sump system, and discharge of water into existing surface waters will not be permitted due to environmental effects. Operate the dewatering system continuously, 24 hours per day, 7 days per week until such time as construction work below existing water levels is complete, unless directed otherwise. Measure and record the performance of the dewatering system at the same time each day by use of suitable observation wells or piezometers installed in conjunction with the dewatering system. After placement of structures or pipes and backfill, the water level may rise but at no time higher than 2 feet below the prevailing level of excavation or backfill, or 2 feet below the level which would cause flotation of incompletely backfilled structures or pipelines, whichever is lower. Before starting work submit a dewatering plan describing the basic components of the dewatering system proposed and its planned method of operation. Submit the dewatering plan performance records weekly.

3.5 SHORING

Shoring, including sheet piling, shall be furnished and installed as necessary to protect workmen, banks, adjacent paving, structures, and utilities. Shoring, bracing, and sheeting shall be removed as excavations are backfilled, in a manner to prevent caving.

3.6 BLASTING

Blasting will not be permitted.

3.7 UTILITY AND DRAIN TRENCHES

Trenches for underground utilities systems and drain lines shall be excavated to the required alignments and depths. The bottoms of trenches shall be graded to secure the required slope and shall be tamped if necessary to provide a firm pipe bed. Recesses shall be excavated to accommodate bells and joints so that pipe will be uniformly supported for the entire length.

3.8 BORROW

Where satisfactory materials are not available in sufficient quantity from required excavations, approved materials shall be obtained as specified in Section 02210 GRADING.

3.9 EXCAVATED MATERIALS

Satisfactory excavated material required for structural fill, fill or backfill shall be placed in the proper section of the permanent work required under this section or shall be separately stockpiled if it cannot be readily placed. Satisfactory material in excess of that required for the permanent work and all unsatisfactory material shall be disposed of as specified in Section 02210 GRADING.

3.10 FINAL GRADE OF SURFACES TO SUPPORT CONCRETE

Excavation to final grade shall not be made until just before concrete is to be placed.

3.11 SUBGRADE PREPARATION

Unsatisfactory material in surfaces to receive fill or in excavated areas shall be removed and replaced with satisfactory materials. The surface shall be scarified to a depth of 6 inches before the fill is started. Sloped surfaces steeper than 1 vertical to 4 horizontal shall be plowed, stepped, benched, or broken up so that the fill material will bond with the existing material. When subgrades are less than the specified density, the ground surface shall be broken up to a minimum depth of 6 inches, pulverized, and compacted to the specified density. When the subgrade is part fill and part excavation or natural ground, the excavated or natural ground portion shall be scarified to a depth of 12 inches and compacted as specified for the adjacent fill. Material shall not be placed on surfaces that are muddy, frozen, or contain frost. Compaction shall be accomplished by sheepsfoot rollers, pneumatic-tired rollers, steel-wheeled rollers, or other approved equipment well suited to the soil being compacted. Material shall be moistened or aerated as necessary to provide the moisture content that will readily facilitate obtaining the specified compaction with the equipment used. Minimum subgrade density shall be as specified in paragraph 3.13 FILLING AND BACKFILLING.

3.12 FILLING AND BACKFILLING (STRUCTURAL)

Satisfactory materials shall be used in bringing structural fills and backfills to the lines and grades indicated and for replacing unsatisfactory materials. Satisfactory materials shall be placed in horizontal layers not exceeding 9 inchesin loose thickness, or 6 inches when hand-operated compactors are used. After placing, each layer shall be plowed, disked, or otherwise broken up, moistened or aerated as necessary, thoroughly mixed and compacted as specified. Backfilling shall not begin until construction below finish grade has been approved, underground utilities systems have been inspected, tested and approved, forms removed, and the excavation cleaned of trash and debris. Backfill shall be brought to indicated finish grade and shall include backfill for outside grease interceptors and underground fuel tanks. Backfill shall not be placed in wet or frozen areas. Where pipe is coated or wrapped for protection against corrosion, the backfill material up to an elevation 2 feetabove sewer lines and 1 foot above other utility lines shall be free from stones larger than 1 inchin any dimension. Heavy equipment for spreading and compacting backfill shall not be operated closer to foundation or retaining walls than a distance equal to the height of backfill above the top of footing; the area remaining shall be compacted in layers not more than 4 inchesin compacted thickness with power-driven hand tampers suitable for the material being compacted. Backfill

shall be placed carefully around pipes or tanks to avoid damage to coatings, wrappings, or tanks. Backfill shall not be placed against foundation walls prior to 7 days after completion of the walls. As far as practicable, backfill shall be brought up evenly on each side of the wall and sloped to drain away from the wall. Each layer of structural fill and backfill shall be compacted to not less than the percentage of maximum density specified below:

	Percent Laboratory maximum density	
	Cohesive material	Cohesionless material
Structural Fill, embankment, and backfill		
Under structures, building slabs, steps, paved areas, around footings, and in trenches	90	95
Under sidewalks and grassed areas	85	90
Under building slabs, steps, and paved areas, top 12 inches	90	95
Under sidewalks, top 6 inches	85	90

Approved compacted subgrades that are disturbed by the Contractor's operations or adverse weather shall be scarified and compacted as specified herein before to the required density prior to further construction thereon. Recompaction over underground utilities and heating lines shall be by hand tamping.

3.12.1 Filling Controlled Low Strength Mix (CLSM) - Alternate

Building foundation @ Contractor's option may bear on a controlled low strength mix (CLSM) which will extend to the proposed final bearing depth. CLSM may not be placed until review and approval is received from the Contracting Officer. For requirements for the CLSM see Section 03300 Appendix, "Controlled Low Strength Material (CLSM)".

3.13 #.1 SOIL TREATMENT

Just prior to placing concrete slab on grade and basement slab and just prior to backfilling a concrete or masonry foundations for structures, soil treatment shall be applied. The Contractor shall submit to the Contracting Officer and Air Force Base Civil Engineer/Entomology Section at least 15 days in advance before applying the soil treatment as specified under paragraph SUBMITTALS relating to soil treatment agent. Soil treatment agents shall be delivered to the jobsite in sealed and labeled containers bearing the manufacturer's warnings to be observed in storage and use of soil treatment agents. Labels shall bear evidence of registration under the Federal Fungicide and Rodenticide Act and shall provide recommended rates of

application. Soil treat shall be isofenphos, fenvalerate, cypermethrin, permethrin, or chlorphyrifos in concentrations recommended by the manufacturer. Other soil treatment agents may be used with prior approval of Contracting Officer and Air Force Base, base Civil Engineering/Entomology Section. Soil treatment agents shall be applied by licensed and certified pest control subject to approval by the Air Force Base, Base Civil Engineering/Entomology Section and the Contracting Officer.

3.14 FIELD TESTING CONTROL

Testing shall be the responsibility of the Contractor and shall be performed by an approved commercial testing laboratory or by the Contractor subject to approval. Testing facilities and personnel shall meet the requirements of ASTM D 3740. Field in-place density shall be determined in accordance with ASTM D 1556 or ASTM D 2167. Moisture-density relations shall be determined in accordance with ASTM D 1557, Method D. The minimum number of tests, acceptable for each type of operation shall be in accordance with Section 01400 CONTRACTOR QUALITY CONTROL.

3.14.1 Moisture Content

In the stockpile, excavation or borrow areas, a minimum of two tests per day per type of material or source of materials being placed is required during stable weather conditions. During unstable weather, tests shall be made as dictated by local conditions and approved moisture content shall be tested in accordance with ASTM D 2216.

3.14.2 Optimum Moisture and Laboratory Maximum Density

Tests shall be made for each type material or source of material including borrow material to determine the optimum moisture and laboratory maximum density values. One representative test per 50 cubic yards of fill and backfill, or when any change in material occurs which may affect the optimum moisture content or laboratory maximum density will be made.

3.15 CAPILLARY WATER BARRIER

Capillary water barrier under concrete floor and area-way slabs on grade shall be placed directly on the subgrade and shall be compacted with a minimum of two passes of a hand-operated plate-type vibratory compactor.

3.16 GRADING

Areas within 5 feetoutside of each building and structure line shall be constructed true-to-grade, shaped to drain, and shall be maintained free of trash and debris until final inspection has been completed and the work has been accepted.

3.17 SPREADING TOPSOIL

Areas outside the building lines from which topsoil has been removed shall be topsoiled. The surface shall be free of materials that would hinder planting or maintenance operations. The subgrade shall be pulverized to a depth of 2 inchesby disking or plowing for the bonding of topsoil with the subsoil. Topsoil shall then be uniformly spread, graded, and compacted to the thickness, elevations, slopes shown, and left free of surface

irregularities. Topsoil shall be compacted by one pass of a cultipacker, roller, or other approved equipment weighing 100 to 160 pounds per linear foot of roller. Topsoil shall not be placed when the subgrade is frozen, excessively wet, extremely dry, or in a condition otherwise detrimental to seeding, planting, or proper grading.

3.18 3.18 PROTECTION

Settlement or washing that occurs in graded, topsoiled, or backfilled areas prior to acceptance of the work shall be repaired and grades reestablished to the required elevations slopes.

END FOF SECTION

SECTION 02222

EXCAVATION, TRENCHING, AND BACKFILLING FOR UTILITIES SYSTEMS

1 GENERAL

1.1 REFERENCES

The publications listed below form a part of this specification to the extent referenced. The publications are referred to in the text by basic designation only.

AMERICAN SOCIETY FOR TESTING AND MATERIALS (ASTM)

ASTM C 117	(1995) Materials Finer than 75 micrometer (um) (No. 200) Sieve in Mineral Aggregates by Washing
ASTM C 136	(1996) Sieve Analysis of Fine and Coarse Aggregates
ASTM D 422	(1963; R 1990) Particle-Size Analysis of Soils
ASTM D 1556	(1990, R 1996) Density of Soil in Place by the Sand-Cone Method
ASTM D 1557	(1991) Moisture-Density Relations of Soils and Soil-Aggregate Mixtures Using 4.54-kilogram (kg) (10-lb) Rammer and 457-mm (18-in.) Drop
ASTM D 2167	(1994) Density and Unit Weight of Soil in Place by the Rubber Balloon Method
ASTM D 2216	(1992) Laboratory Determination of Water (Moisture) Content of Soil, Rock, and Soil-Aggregate Mixtures
ASTM D 2217	(1985) Wet Preparation of Soil Samples for Particle-Size Analysis and Determination of Soil Constants
ASTM D 2487	(1993) Standard Classification of Soils for Engineering Purposes (Unified Soil Classification System
ASTM D 2922	(1991) Density of Soil and Soil-Aggregate in Place by Nuclear Methods (Shallow Depth)
ASTM D 2937	(1994) Density of Soil in Place by the Drive-Cylinder Method

ASTM D 3017	(1996) Water Content of Soil and Rock in Place by Nuclear Methods (Shallow Depth)
ASTM D 3740	(1996) Standard Practice for Minimum Requirements for Agencies Engaged in the Testing and/or Inspection of Soil and Rock as Used in Engineering Design and Construction
ASTM D 4318	(Rev. A 1995) Liquid Limit, Plastic Limit, and Plasticity Index of Soils

WASHINGTON STATE DEPARTMENT OF TRANSPORTATION

W.S.D.O.T.	(1994) Standard Plans and Specifications for Road, Bridge, and Municipal Construction

1.2 DEFINITIONS

1.2.1 Degree of Compaction

Degree of compaction shall be expressed as a percentage of the maximum density obtained by the test procedure presented in ASTM D 1557.

1.3 SUBMITTALS

Government approval is required for submittals with a "GA" designation; submittals having an "FIO" designation are for information only. The following shall be submitted in accordance with Section 01330 "SUBMITTAL PROCEDURES":

SD-09 Reports

Field Density Tests; GA.

Testing of Backfill Materials; GA.

Copies of all laboratory and field test reports within 24 hours of the completion of the test.

2 PRODUCTS

2.1 MATERIALS

2.1.1 Satisfactory Materials

Satisfactory materials shall consist of any material classified by ASTM D 2487 as GW, GP, SW, and SP and shall be free from roots and other organic matter, trash, debris, and frozen materials and stones larger than 3 inches in any dimension. Materials classified as SM, GP-GM, SP-SM, GM or GC are also satisfactory provided that they contain moisture content suitable for the intended use. Dark brown to black silty gravels with organics are satisfactory only for use as final backfill in open, turfed, or seeded areas, provided they contain moisture contents suitable for the intended use.

2.1.2 Unsatisfactory Materials

Unsatisfactory materials shall be materials that do not comply with the requirements for satisfactory materials. Unsatisfactory materials include but are not limited to those materials containing roots and other organic matter, trash, debris, frozen materials and materials classified in ASTM D 2487, as PT, OH, and OL. Unsatisfactory materials also include man-made fills, refuse, or backfills from previous construction.

2.1.3 Cohesionless and Cohesive Materials

Cohesionless materials shall include materials classified in ASTM D 2487 as GW, GP, SW, and SP. Cohesive materials include materials classified as GC, SC, ML, CL, MH, and CH. Materials classified as GM and SM will be identified as cohesionless only when the fines are nonplastic. Liquid limit and plasticity index shall be determined in accordance with ASTM D 4318 using ASTM D 2217, procedure B. Determination of grain size for classification shall be made in conformance with ASTM C 117, ASTM C 136, or ASTM D 422.

2.1.4 Unyielding Material

Unyielding material shall consist of gravelly soils with stones greater than 4 inches in any dimension or as defined by the pipe manufacturer, whichever is smaller.

2.1.5 Unstable Material

Unstable material shall consist of materials too wet to properly support the utility pipe, conduit, or appurtenant structure.

2.1.6 Select Granular Material

Select granular material shall consist of free draining, non frost susceptible, well-graded sand, gravel, crushed gravel, crushed stone or crushed slag composed of hard, tough and durable particles, and shall contain not more than 10percent by weight of material passing a No. 200 mesh sieve, and no less than 95 percent by weight passing the 1 inch sieve.. The maximum allowable aggregate size shall be 1 inch, or the maximum size recommended by the pipe manufacturer, whichever is smaller.

2.1.7 Bedding

Bedding shall conform to W.S.D.O.T. standard specifications, 1994 ed., paragraph 9-03-16.

2.1.8 Initial Backfill Material

Initial backfill shall consist of select granular material or satisfactory materials free from rocks 3 inches or larger in any dimension or free from rocks of such size as recommended by the pipe manufacturer, whichever is smaller. When the pipe is coated or wrapped for cathodic protection, the initial backfill material shall be free of stones larger than 2 inches in any dimension or as recommended by the pipe manufacturer, whichever is smaller.

2.1.9 Plastic Marking Tape

Plastic marking tape shall be acid and alkali-resistant polyethylene film, 6-inches wide with minimum thickness of 0.004 inch. Tape shall have a minimum strength of 1750 psi lengthwise and 1500 psi crosswise. The tape shall be manufactured with integral wires, foil backing or other means to enable detection by a metal detector when the tape is buried up to 3 feet deep. The tape shall be of a type specifically manufactured for marking and locating underground utilities. The metallic core of the tape shall be encased in a protective jacket or provided with other means to protect it from corrosion. Tape color shall be as specified in TABLE 1 and shall bear a continuous printed inscription describing the specific utility.

TABLE 1. Tape Color

Red:	Electric
Yellow:	Gas, Oil, Dangerous Materials
Orange:	Telephone, Telegraph, Television, Police, and Fire Communications
Blue:	Water Systems
Green:	Sewer Systems
White with Black Lettering	High Pressure Steam

3 EXECUTION

3.1 EXCAVATION

Excavation of every description and of whatever substances encountered shall be performed to the lines and grades indicated. During excavation, material satisfactory for backfilling shall be stockpiled in an orderly manner at a distance from the banks of the trench equal to 1/2 the depth of the excavation, but in no instance closer than 2 feet. Excavated material not required or not satisfactory for backfill shall be disposed of outside the limits of Government controlled land. Grading shall be done as may be necessary to prevent surface water from flowing into the excavation, and any water accumulating therein shall be removed to maintain the stability of the bottom and sides of the excavation. Unauthorized overexcavation shall be backfilled in accordance with paragraph BACKFILLING AND COMPACTION at no additional cost to the Government.

3.1.1 Trench Excavation

The trench shall be excavated as recommended by the manufacturer of the pipe to be installed. Trench walls below the top of the pipe shall be sloped, or made vertical, and of such width as recommended in the manufacturer's installation manual. Where no manufacturer's installation manual is available, trench walls shall be excavated to a stable angle of repose as required to properly complete the work. The excavation shall be completed as quickly as possible to the design depth to protect the foundation soils from drying or infiltration of additional moisture. Trench excavations shall adhere to requirements prescribed in EM 385-1-1, Safety and Health Requirements Manual. Special attention shall be given to slopes which may be adversely affected by weather or moisture content. Width below the top of pipe shall not exceed 24 inches plus pipe outside diameter (O.D.) for pipes of less than 24 inches inside diameter and shall not exceed 36 inches plus pipe outside diameter for sizes larger than 24 inches inside diameter.

Where recommended trench widths are exceeded, redesign, stronger pipe, or special install procedures shall be utilized by the Contractor. The cost of redesign, stronger pipe, or special installation procedures shall be borne by the Contractor without any additional cost to the Government.

3.1.1.1 Bottom Preparation

The bottoms of trenches shall be accurately graded to provide uniform bearing and support for the bottom quadrant of each section of the pipe. Bell holes shall be excavated to the necessary size at each joint or coupling to eliminate point bearing. Stones of 2 inches or greater in any dimension, or as recommended by the pipe manufacturer, whichever is smaller, shall be removed to avoid point bearing.

3.1.1.2 Removal of Unyielding Material

Where unyielding material is encountered in the bottom of the trench, such material shall be removed 12 inches below the required grade and replaced with suitable materials as provided in paragraph BACKFILLING AND COMPACTION.

3.1.1.3 Removal of Unstable Material

Where unstable material is encountered in the bottom of the trench, such material shall be removed to the depth directed and replaced to the proper grade with select granular material as provided in paragraph BACKFILLING AND COMPACTION. When removal of unstable material is required due to the fault or neglect of the Contractor in his performance of the work, the resulting material shall be excavated and replaced by the Contractor without additional cost to the Government.

3.1.1.4 Excavation for Appurtenances

Excavation for manholes, catch-basins, or similar structures shall be sufficient to leave at least 12 inches clear between the outer structure surfaces and the face of the excavation or support members. Removal of unstable material shall be as specified above. When concrete or masonry is to be placed in an excavated area, special care shall be taken not to disturb the bottom of the excavation. Excavation to the final grade level shall not be made until just before the concrete or masonry is to be placed.

3.1.1.5 Stockpiles

Stockpiles shall be kept in a neat and well drained condition, giving due consideration to drainage at all times. The ground surface at stockpile locations shall be cleared, grubbed, and sealed by rubber-tired equipment, excavated satisfactory and unsatisfactory materials shall be separately stockpiled. Stockpiles of satisfactory materials shall be protected from contamination which may destroy the quality and fitness of the stockpiled material. If the Contractor fails to protect the stockpiles, and any material becomes unsatisfactory, such material shall be removed and replaced with satisfactory material from approved sources at no additional cost to the Government.

3.2 BACKFILLING AND COMPACTION

Backfill material shall consist of satisfactory material, select granular material, or initial backfill material as required. Backfill shall be

placed in layers not exceeding 6 inches loose thickness for compaction by hand operated machine compactors, and 8 inches loose thickness for other than hand operated machines, unless otherwise specified. Each layer within pavement areas shall be compacted to at least 95 percent maximum density for cohesionless soils and 90 percent maximum density for cohesive soils. Each layer within landscaped and sidewalk areas shall be compacted to at least 85% maximum density for cohesive soils and 90% maximum density for cohesionless soils. The first 6 inches of backfill material directly above PVC pipes shall not be compacted. The backfill shall be brought up evenly on both sides of the pipe for the full length. Care shall be taken to ensure thorough compaction of the full under the haunch of the pipe.

3.2.1 Trench Backfill

Trenches shall be backfilled to the grade shown. The trench shall not be backfilled until all specified tests are performed.

3.2.1.1 Replacement of Unyielding Material

Unyielding material removed from the bottom of the trench shall be replaced with select granular material, or initial backfill material.

3.2.1.2 Replacement of Unstable Material

Wet or other unstable material removed from the bottom of the trench or excavation shall be replaced with select granular material not exceeding 6 inches in loose thickness..

3.2.1.3 Bedding and Initial Backfill

Bedding shall be of the thickness shown. Bedding shall be clean sand-gravel mixture free from organic matter and conforming to the following gradation when tested in accordance with ASTM D 422.

U.S. Standard Sieve Size	Percent Passing
1 inch	100
No. 4	25-80
No. 200	0-10

Initial backfill material shall be placed and compacted with approved tampers to a height of at least one foot above the utility pipe. The backfill shall be brought up evenly on both sides of the pipe for the full length of the pipe. Care shall be taken to ensure thorough compaction of the fill under the haunches of the pipe. Backfill material in this portion of the trench shall consist of satisfactory material at a moisture content that will facilitate compaction, free from stones of such size as recommended by the pipe manufacturer, or larger than 2 inches in any dimension, whichever is smaller, except that where the pipe is coated or wrapped for protection against corrosion, the backfill material shall be free of stones larger than 2 inches in any dimension or as recommended by the pipe manufacturer, whichever is smaller.

3.2.1.4 Final Backfill

The remainder of the trench, except for special materials specified on plans for roadways and parking lots shall be filled with satisfactory material. Backfill material shall be placed and compacted as follows:

a. Roadways and Parking lots: Backfill shall be placed up to the elevation at which the requirements for the pavement design support controls. Water flooding or jetting methods of compaction will not be permitted.

b. Sidewalks, Turfed or Seeded Areas and Miscellaneous Landscape Areas: Backfill shall be deposited in layers of a maximum of 12 inches loose thickness, and compacted to 85 percent maximum density for cohesive soils and 90 percent maximum density for cohesionless soils. Compaction by water flooding or jetting will not be permitted. This requirement shall also apply to all other areas not specifically designated above.

3.2.2 Backfill for Appurtenances

After the manhole, catch basin, or similar structure has been constructed and the concrete has been allowed to cure for a minimum of three days, backfill shall be placed in such a manner that the structure will not be damaged by the shock of falling earth. The backfill material shall be deposited and compacted as specified for final backfill, and shall be brought up evenly on all sides of the structure to prevent eccentric loading and excessive stress.

3.3 SPECIAL REQUIREMENTS

Special requirements for both excavation and backfill relating to the specific utilities are as follows:

3.3.1 Water Lines

Trenches shall be of a depth to provide a minimum cover of 36 inches from the existing ground surface, or from the indicated finished grade, whichever is lower, to the top of the pipe.

3.3.2 Plastic Marking Tape

Warning tapes shall be installed directly above the pipe, at a depth of 18 inches below finished grade, unless otherwise shown.

3.4 TESTING

Testing shall be the responsibility of the Contractor and shall be performed at no additional cost to the Government.

3.4.1 Testing Facilities

Tests shall be performed by a Corps of Engineers (COE) approved commercial testing laboratory. Approval of testing facilities and personnel shall be based on compliance with ASTM D 3740 and in accordance with section: Contractor Quality Control.

3.4.2 Testing of Backfill Materials

Characteristics of backfill materials shall be determined in accordance with particle size analysis of soils ASTM D 422 and moisture-density relations of soils ASTM D 1557. A minimum of one particle size analysis and one moisture-density relation test shall be performed on each different type of material used for bedding and backfill. A mechanical tamper may be used, provided the results are correlated with those obtained by the referenced hand tamper or ASTM D 1557. Field in place density shall be determined in accordance with ASTM D 1556. Trenches improperly compacted shall be re opened to the depth directed, then refilled and compacted to the density specified at no additional cost to the Government.

3.4.3 Field Density Tests

Tests shall be performed in sufficient numbers to ensure that the specified density is being obtained. A minimum of one field density test per lift of backfill for every 50 feet of installation shall be performed. One moisture density relationship shall be determined for every meters 1500 cubic yards of material used. Field in-place density shall be determined in accordance with ASTM D 1556. Trenches improperly compacted shall be reopened to the depth directed, then refilled and compacted to the density specified at no additional cost to the Government.

4 DISPLACEMENT OF SEWERS

After other required tests have been performed and the trench backfill compacted to the finished grade surface, the pipe shall be inspected to determine whether significant displacement has occurred. This inspection shall be conducted in the presence of the Contracting officer. Pipe shall be inspected by shining a light or laser between manholes or manhole locations, or by the use of television cameras passed through the pipe. If, in the judgement of the Contracting officer, the interior of the pipe shows poor alignment or any other defects that would cause improper functioning of the system, the defects shall be remedied as directed at no additional cost to the Government.

END OPF SECTION

SECTION 02225

EARTHWORK FOR ROADWAYS AND PARKING LOTS

1 GENERAL

1.1 REFERENCES

The publications listed below form a part of this specification to the extent referenced. The publications are referred to in the text by basic designation only.

AMERICAN SOCIETY FOR TESTING AND MATERIALS (ASTM)

ASTM C 136	(1995a) Sieve Analysis of Fine and Coarse Aggregates
ASTM D 422	(1963; R 1990) Particle-Size Analysis of Soils
ASTM D 1140	(1992) Amount of Material in Soils Finer than the No. 200 (75-micrometer) Sieve
ASTM D 1556	(1990) Density and Unit Weight of Soil in Place by the Sand-Cone Method
ASTM D 1557	(1991) Laboratory Compaction Characteristics of Soil Using Modified Effort (56,000 ft-lbf/cu. ft. (2,700 kN-m/cu. m.))
ASTM D 2167	(1994) Density and Unit Weight of Soil in Place by the Rubber Balloon Method
ASTM D 2487	(1993) Classification of Soils for Engineering Purposes (Unified Soil Classification System)
ASTM D 2922	(1991) Density of Soil and Soil-Aggregate in Place by Nuclear Methods (Shallow Depth)
ASTM D 2937	(1994) Density of Soil in Place by the Drive-Cylinder Method
ASTM D 3017	(1988; R1993) Water Content of Soil and Rock in Place by Nuclear Methods (Shallow Depth)
ASTM D 3740	(1988) Standard Practice for Evaluation of Agencies Engaged in Testing and/or Inspection of Soil and Rock as Used in Engineering Design and Construction
ASTM D 4318	(1993) Liquid Limit, Plastic Limit, and Plasticity Index of Soils

1.2 DEFINITIONS

1.2.1 Satisfactory Materials

Satisfactory materials shall comprise any materials classified by, ASTM D 2487 as GW, GP, SW, SP free from roots and other organic matter, trash, debris, and frozen materials and stones larger than 6 inches in any dimension. Materials classified as SM, GP-GM, SP-SM, GM, or GC are also satisfactory provided that they contain moisture contents suitable for the intended use.

1.2.2 Unsatisfactory Materials

Materials which do not comply with the requirements for satisfactory materials are unsatisfactory. Materials classified by ASTM D 2487 as Pt, OH, and OL are unsatisfactory. Unsatisfactory materials also include GM (dark brown to black with organic materials), ML (black with organic materials), man-made fills, refuse, or backfills from previous construction or having moisture contents which are not suitable for the intended use.

1.2.3 Cohesionless and Cohesive Materials

Cohesionless materials include materials classified in ASTM D 2487 as GW, GP, SW, AND SP. Cohesive materials include materials classified as GC, SC, ML, CL, MH, and CH. Materials classified as GM and SM will be identified as cohesionless only when the fines are nonplastic. Testing required for classifying materials shall be in accordance with ASTM D 4318, ASTM C 136, ASTM D 422, and ASTM D 1140.

1.2.4 Degree of Compaction

Degree of compaction required is expressed as a percentage of the maximum density obtained by the test procedure presented in ASTM D 1557 abbreviated as a percent of laboratory maximum density.

1.3 SUBMITTALS

The following shall be submitted in accordance with Section 01330 "SUBMITTAL PROCEDURES":

SD-08 Statements

Earthwork

Procedure and location for disposal of unused satisfactory material. Proposed source of borrow material.

SD-09 Reports

Testing

Within 24 hours of conclusion of physical tests, 2 copies of test results, including calibration curves and results of calibration tests.

1.4 CLASSIFICATION OF EXCAVATION

No consideration will be given to the nature of the materials, and all excavation will be designated as unclassified excavation.

1.5 BLASTING

Blasting will not be permitted.

1.6 UTILIZATION OF EXCAVATED MATERIALS

Unsatisfactory materials removed from excavations shall be disposed of off government property. Satisfactory material removed from excavations shall be used in the construction of fills, subgrades, bedding (as backfill), and for similar purposes, provided they contain the moisture contents for the intended use. Surplus satisfactory material, not required for use, in this project, shall be disposed of off government property.

2 PRODUCTS (NOT APPLICABLE)

3 EXECUTION

3.1 PREPARATION OF GROUND SURFACE FOR FILL

All vegetation, such as roots, brush, heavy sods, heavy growth of grass, and all decayed vegetable matter, rubbish, and other unsatisfactory material within the area upon which fill is to be placed, shall be completely stripped and grubbed or otherwise removed before the fill is started. In no case will unsatisfactory material remain in or under the fill required for new pavements. Sloped ground surfaces steeper than one vertical to four horizontal on which fill is to be placed shall be plowed, stepped, or broken up, as directed, in such manner that the fill material will bond with the existing surface. Prepared surfaces on which compacted fill is to be placed shall be wetted or dried as may be required to obtain the specified moisture content and density.

3.2 EXCAVATION

The Contractor shall perform excavation of every type of material encountered within the limits of the project elevations indicated and as specified herein. Grading shall be in conformity with the typical sections shown and the tolerances specified in paragraph FINISHING. Satisfactory excavated materials shall be transported to and placed in fill or embankments within the limits of the work. Unsatisfactory materials encountered within the limits of the new pavement area shall be excavated below grade and replaced with satisfactory materials. During construction, excavation and fill shall be performed in a manner and sequence that will provide proper drainage at all times. Material required for fill in excess of that produced by excavation within the grading limits shall be provided by the Contractor.

3.3 SELECTION OF BORROW MATERIAL

Borrow material shall be selected to meet the requirements and conditions of the particular fill for which it is to be used. Borrow material shall be obtained from approved sources, selected by the Contractor. Borrow materials shall be obtained from sources outside the limits of government-

controlled land. Unless otherwise provided in the contract, the Contractor shall procure material, pay royalties and other charges involved, and bear the expense of developing the sources, including rights-of-way for hauling.

3.4 BACKFILL

Backfill to be placed in vehicular pavement areas shall be placed in layers not exceeding 6 inches loose thickness for compaction by hand operated machines and 8 inches in loose thickness for other than hand operated machines. Backfill adjacent to any and all types of structures shall be placed and compacted to at least 90 percent laboratory maximum density for cohesive materials or 95 percent laboratory maximum density for cohesionless materials to prevent wedging action or eccentric loading upon or against the structure. All other compaction requirements for backfill materials shall conform to the applicable portions of paragraph 3.5 SUBGRADE PREPARATION, and Section 02222 EXCAVATION, TRENCHING, AND BACKFILLING FOR UTILITIES SYSTEMS. Compaction shall be accomplished by sheepsfoot rollers, pneumatic-tired rollers, steel-wheeled rollers, vibratory compactors, or other approved equipment.

3.5 SUBGRADE PREPARATION

3.5.1 Construction

Subgrade shall be shaped to line, grade, and cross section, and compacted to at least 90 percent of laboratory maximum density for cohesive soils and 95 percent laboratory maximum density for cohesionless soils. This operation shall include plowing, disking, and any moistening or aerating required to obtain specified compaction. Soft or otherwise unsatisfactory material shall be removed to a maximum depth of 30 inches measured from the top of the subgrade and replaced with satisfactory excavated material or other approved material. Low areas resulting from removal of unsatisfactory material shall be brought up to required grade with satisfactory materials, and the entire subgrade shall be shaped to line, grade, and cross section and compacted as specified above. The elevation of the finished subgrade shall not vary more than 0.05 foot from the established grade and cross section.

3.5.2 Compaction and Proof Rolling

Prior to placement of subbase course, the subgrade shall be proof rolled to identify any soft moist material, along with all other material, classified as unsatisfactory in this section. Replacement material shall conform to 1.2.1 SATISFACTORY MATERIAL or consist of select granular fill, as required. Compaction shall be accomplished by sheepsfoot rollers, pneumatic-tired rollers, steel-wheeled rollers, vibratory compactors, or other approved equipment.

3.6 FINISHING

The surface of excavations, embankments, and subgrades shall be finished to a smooth and compact surface in accordance with the lines, grades, and cross sections or elevations shown. The degree of finish for graded areas shall be within 0.1 foot of the grades and elevations indicated except that the degree of finish for subgrades shall be specified in paragraph SUBGRADE PREPARATION. The surface of areas to be turfed shall be finished to a smoothness suitable for the application of turfing materials.

3.7 TESTING

Testing shall be the responsibility of the Contractor and shall be performed at no additional cost to the Government. Testing shall be performed by a Corps of Engineers (COE) approved commercial testing laboratory. Testing facilities and personnel shall meet the requirements of ASTM D 3740 and Section 01400 "CONTRACTOR QUALITY CONTROL". Moisture-density relations shall be determined in accordance to the procedure referenced in paragraph DEGREE OF COMPACTION. Field in-place density shall be determined in accordance with ASTM D 1556 or ASTM D 2167.

3.7.1 Fill and Backfill Material Gradation

One test per 50 cubic yards stockpiled or in-place source material. Gradation of fill and backfill material shall be determined in accordance with ASTM C 136 or ASTM D 422 or ASTM D 1140.

a. One test per 4000 square feet, or fraction thereof, of each lift of fill or backfill areas compacted by other than hand-operated machines.

b. One test per 2000 square feet, or fraction thereof, of each lift of fill or backfill areas compacted by hand-operated machines.

3.7.2 Moisture Contents

In the stockpile, excavation or borrow areas, a minimum of two tests per day per type of material or source of material being placed during stable weather conditions shall be performed. During unstable weather, tests shall be made as dictated by local conditions and approved by the Contracting Officer.

3.7.3 Optimum Moisture and Laboratory Maximum Density

Tests shall be made for each type material or source of material including borrow material to determine the optimum moisture and laboratory maximum density values. One representative test per 100 cubic yards of fill and backfill, or when any change in material occurs which may affect the optimum moisture content or laboratory maximum density.

3.7.4 Tolerance Tests for Subgrades

Continuous checks on the degree of finish specified in paragraph SUBGRADE PREPARATION shall be made during construction of the subgrades.

3.8 PROTECTION

During construction, embankments and excavation shall be kept shaped and drained. Ditches and drains along subgrade shall be maintained in drain effectively at all times. The finished subgrade shall not be disturbed by traffic or other operation and shall be protected and maintained by the Contractor in a satisfactory condition until base or pavement is placed. The storage or stockpiling of materials on the finished subgrade will not be permitted. No base course, or pavement shall be laid until the subgrade has been checked and approved, and in no case shall the base be placed on a muddy, spongy, or frozen subgrade.

END OF SECTION

SECTION 02241

AGGREGATE BASE COURSE

1 GENERAL

1.1 REFERENCES

The publications listed below form a part of this specification to the extent referenced. The publications are referred to in the text by basic designation only.

AMERICAN SOCIETY FOR TESTING AND MATERIALS (ASTM)

ASTM C 29	(Rev A, 1991) Unit Weight and Voids in Aggregate
ASTM C 88	(1990) Soundness of Aggregates by Use of Sodium Sulfate or Magnesium Sulfate
ASTM C 127	(1988) Specific Gravity and Absorption of Course Aggregate
ASTM C 128	(1993) Specific Gravity and Absorption of Fine Aggregate
ASTM C 131	(1989) Resistance to Degradation of Small-Size Coarse Aggregate by Abrasion and Impact in the Los Angeles Machine
ASTM C 136	(1995) Sieve Analysis of Fine and Coarse Aggregates
ASTM D 75	(1987; R 1992) Sampling Aggregates
ASTM D 422	(1963; R 1992) Particle-Size Analysis of Soils
ASTM D 1556	(1990) Density and Unit Weight of Soil in Place by the Sand-Cone Method
ASTM D 1557	(1991) Moisture-Density Relations of Soils and Soil-Aggregate Mixtures Using 10-lb. (r.54 kg) Rammer and 18-In. (457 mm) Drop
ASTM D 2167	(1994) Density and Unit Weight of Soil In-Place by the Rubber Balloon Method
ASTM D 4318	(1995) Liquid Limit, Plastic Limit, and Plasticity Index of Soils
ASTM E 11	(1995) Wire-Cloth Sieves for Testing Purposes

1.2 DEFINITIONS

1.2.1 Stabilized Aggregate Base

Stabilized Aggregate base as used herein is non frost susceptible, well graded, durable aggregate uniformly moistened and mechanically stabilized by compaction.

1.2.2 Degree of Compaction

Degree of compaction required is expressed as a percentage of the maximum density obtained by the test procedure presented in ASTM D 1557, Method D, abbreviated hereinafter as percent laboratory maximum density.

1.3 GENERAL

The work specified herein consists of the construction of an aggregate base course. The work shall be performed in accordance with this specification and shall conform to the lines, grades, notes and typical sections shown in the plans.

1.4 SUBMITTALS

SD-70 Test Reports

Sampling and Testing; GA. Field Density; GA.

Results of laboratory tests specified under paragraph Aggregates shall be submitted to the Contracting Officer and approved prior to using the material. Tests shall show liquid limit, plasticity index, soundness, wear, fractured faces, and sieve analysis tests including percentage of particles having diameters less than .02 mm.

Copies of field test results shall be submitted within 24 hours after the tests are performed.

1.5 WEATHER LIMITATIONS

Base shall not be constructed when the atmospheric temperature is less than 35 degrees F. Base shall not be constructed on subgrades that are frozen or contain frost. If the temperature falls below 35 degrees F, completed areas shall be protected against any detrimental effects of freezing.

1.6 PLANT, EQUIPMENT, MACHINES, AND TOOLS

1.6.1 General Requirements

Plant, equipment, machines, and tools used in the work shall be subject to approval and shall be maintained in satisfactory working condition at all times. Other compacting equipment may be used in lieu of that specified, where it can be demonstrated that the results are equivalent. The equipment shall be adequate and have the capability of producing the results specified.

1.6.2 Sprinkling Equipment

Sprinkling equipment shall consist of tank trucks, pressure distributors, or other approved equipment designed to apply controlled quantities of water uniformly over variable widths of surface.

1.6.3 Straightedge

The Contractor shall furnish and maintain at the site, in good condition, one 10-foot straightedge for each bituminous paver, for use in the testing of the finished surface. Straightedge shall be made available for Government use.

1.7 STOCKPILING MATERIALS

Materials, including approved material available from excavation and grading, shall be stockpiled in the manner and at locations designated. Before stockpiling of material, storage sites shall be cleared, and sloped to drain. Materials obtained from different sources shall be stockpiled separately.

1.8 SAMPLING AND TESTING

1.8.1 General Requirements

Sampling and testing shall be performed by a Corps of Engineers (COE) approved commercial testing laboratory. No work requiring testing shall be permitted until the facilities have been inspected and approved. The first inspection shall be at the expense of the Government. Cost incurred for any subsequent inspection required because of failure of the facilities to pass the first inspection will be charged to the Contractor.

1.8.2 Test Results

Results shall verify that materials comply with this specification. When a material source is changed, the new material will be tested for compliance. When deficiencies are found, the initial analysis shall be repeated and the material already placed shall be retested to determine the extent of unacceptable material. All in-place unacceptable material shall be replaced or modified to meet specification requirements.

1.8.3 Sampling

Aggregate samples for laboratory tests shall be taken in accordance with ASTM D 75.

1.8.4 Sieve Analysis

Before starting work, at least one sample of material shall be tested in accordance with ASTM C 136 and ASTM D 422 on sieves conforming to ASTM E 11.

1.8.5 Liquid Limit and Plasticity Index

Liquid limit and plasticity index shall be in accordance with ASTM D 4318.

1.8.6 Laboratory Density

Tests shall provide a moisture-density relationship for the stabilized aggregate. Tests shall be conducted in accordance with ASTM D 1557, Method D..

1.8.7 Wear Tests

Wear tests shall be performed in accordance with ASTM C 131.

1.9 #.1 SAMPLING AND TESTING DURING CONSTRUCTION

Quality control sampling and testing during construction shall be performed as specified in section "Contractor Quality Control."

2 PRODUCTS

2.1 MATERIALS

2.1.1 Aggregates

Aggregates shall be free draining non-frost susceptible (NFS) and consist of crushed stone or slag, crushed gravel, angular sand, or other approved material. Aggregates shall be durable and sound, free from lumps of clay, organic matter, objectionable coatings, and other foreign material. Material retained on a No. 4 sieve shall be known as coarse aggregate and that passing the No. 4 sieve shall be known as binder material.

2.1.1.1 Coarse Aggregate

Only one type of coarse aggregate shall be used on the project. Coarse aggregates, consisting of angular fragments of uniform density and quality, shall have a percentage of wear not to exceed 50 percent after 500 revolutions when tested in accordance with ASTM C 131. The coarse aggregate shall not have a loss greater than 15 percent weighted average at five cycles when tested for soundness in magnesium sulfate in accordance with ASTM C 88. The amount of flat and elongated particles shall not exceed 30 percent. A flat particle is one having a ratio of width to thickness greater than 3, and an elongated particle is one having a ratio of length to width greater than 3.

a. Crushed Gravel: Crushed gravel shall be manufactured from gravel particles 50 percent of which by weight are retained on the maximum size gradation sieve specified.

b. Crushed Stone: Crushed stone retained on each sieve specified shall contain at least 50 percent by weight of crushed pieces having two or more freshly fractured faces with the area of each face being at least equal to 75 percent of the smallest mid sectional area of the piece. When two fractures are adjacent, the angle between the planes of the fractures must be at least 30 degrees to count as two fractured faces.

2.1.2 Binder Material

Binder material shall consist of screenings, angular sand, or other finely divided mineral matter processed or naturally combined with the coarse

aggregate. Liquid-limit and plasticity-index requirements shall apply to any component that is blended to meet the required gradation and shall also apply to the completed course. The portion of any component or of the completed course passing the No. 40 sieve shall be either nonplastic or have a liquid limit not greater than 25 and a plasticity index not greater than 5.

2.1.3 Gradation

Requirements for gradation specified shall apply to the completed base course. The aggregates shall have a 2 inch maximum size and shall be continuously graded within the following limits:

Sieve Designation	Percentage by Weight Passing Square-mesh Sieve (a) (b)		
	No. 1	No. 2	No. 3
2-inch	100	---	---
1-1/2-inch	70-100	100	---
1-inch	45-80	60-100	100
1/2-inch	30-60	30-65	40-70
No. 4	20-50	20-50	20-50
No. 10	15-40	15-40	15-40
No. 40	5-25	5-25	5-25
No. 200	0-10	0-10	0-10

(a) The values are based on aggregates of uniform specific gravity, and the percentages passing the various sieves are subject to appropriate correction in accordance with ASTM C 127 and ASTM C 128 when aggregates of varying specific gravities are used.

3 EXECUTION

3.1 GENERAL REQUIREMENTS

When the base is constructed in more than one layer, the previously constructed layer shall be cleaned of loose and foreign matter by sweeping with power sweepers or power brooms, except that hand brooms may be used in areas where power cleaning is not practicable. Adequate drainage shall be provided during the entire period of construction to prevent water from collecting or standing on the working area. Line and grade stakes shall be provided as necessary for vertical and horizontal control. Grade stakes shall be in lines parallel to the centerline of the area under construction and suitably spaced for string lining.

3.2 PREPARATION OF UNDERLYING COURSE

3.2.1 General Requirements

Before constructing stabilized aggregate base course, the previously constructed underlying course shall be cleaned of foreign substances. Surface of underlying course shall meet the specified compaction and surface tolerances. Subbase course shall conform to Section 02234 SUBBASE COURSE. Ruts or soft, yielding spots that may appear in the underlying course, areas

having inadequate compaction, and deviations of the surface from requirements specified shall be corrected. For cohesionless underlying materials containing sands, sand gravels, or any other cohesionless material in harmful quantities, the surface shall be mechanically stabilized with aggregate prior to placement of the aggregate course. Stabilization may be accomplished by mixing base course material into the underlying course and compacting by approved methods. Properly compacted material will be considered as part of the underlying course and shall meet all requirements for the underlying course. Finished underlying course shall not be disturbed by traffic or other operations and shall be maintained in a satisfactory condition until base course is placed.

3.2.2 Grade Control

Underlying material shall be excavated to sufficient depth for the required subbase and base course thickness so that the finished stabilized base course with the subsequent surface course will meet the fixed grade. The finished and completed area shall conform to the lines, grades, cross section, and dimensions indicated.

3.3 INSTALLATION

3.3.1 Mixing and Placing

Materials shall be mixed and placed in such a manner as to obtain uniformity of the aggregate base course material and at a uniform optimum water content for compaction. The Contractor shall make such adjustments in mixing or placing procedures or in equipment to obtain the true grades, to minimize segregation and degradation, to reduce or accelerate loss or increase of water, and to ensure a satisfactory base course.

3.3.2 Edges of Base Course

Approved material shall be placed along edges of stabilized aggregate base course in such quantities as will compact to thickness of the course being constructed, or to the thickness of each layer in a multiple layer course, allowing in each operation at least a 1 foot width of the shoulder to be rolled and compacted simultaneously with rolling and compacting of each layer of stabilized base course.

3.3.3 Compaction

Each layer of stabilized aggregate base course shall be compacted. Water content shall be maintained at optimum. Density of compacted mixture shall be at least 100 percent of maximum modified proctor density. Rolling shall begin at the outside edge of the surface and proceed to the center, overlapping on successive trips at least one-half the width of the roller. Alternate trips of the roller shall be slightly different lengths. Speed of the roller shall be such that displacement of the aggregate does not occur. Areas inaccessible to the rollers shall be compacted with mechanical tampers, and shall be shaped and finished by hand methods.

3.3.4 Layer Thickness

Compacted thickness of the aggregate course shall be as indicated. No layer shall be in excess of 8 inches nor less than 3 inches in compacted thickness.

3.4 #.1 PROOF ROLLING

Proof rolling of the areas indicated shall be in addition to the compaction specified and shall consist of the application of 30 coverages with a heavy pneumatic-tired roller having four or more tires, each loaded to a minimum of 30,000 pounds and inflated to a minimum of 150 psi. In areas designated, proof rolling shall be applied to the top lift or layer on which base course is laid and to each layer of base course. Water content of the top lift or layer on which base course is laid shall be maintained at optimum or at percentage directed from start of compaction to completion of proof rolling of that layer. Water content of each layer of the base course shall be maintained at the optimum percentage from start of compaction to completion of proof rolling. Materials in base course or underlying materials that produce unsatisfactory results by rolling shall be removed and replaced with satisfactory materials and recompacted.

3.4.1 Finishing

The surface of the top layer shall be finished to grade and cross section shown. Finished surface shall be of uniform texture. Light blading during compaction may be necessary for the finished surface to conform to the lines, grades, and cross sections. Should the surface for any reason become rough, corrugated, uneven in texture, or traffic marked prior to completion, such unsatisfactory portion shall be scarified, reworked, recompacted, or replaced as directed.

3.4.1.1 Smoothness

Surface of each layer shall show no deviations in excess of 3/8 inch when tested with the 10 foot straightedge. Deviations exceeding this amount shall be corrected by removing material and replacing with new material, or by reworking existing material and compacting, as directed.

3.4.1.2 Thickness Control

Compacted thickness of the base course shall be within l/2 inch of the thickness indicated. Where the measured thickness is more than l/2 inch deficient, such areas shall be corrected by scarifying, adding new material of proper gradation, reblading, and recompacting as directed. Where the measured thickness is more than l/2 inch thicker than indicated, the course shall be considered as conforming to the specified thickness requirements. Average job thickness shall be the average of all thickness measurements taken for the job, but shall be within l/4 inch of the thickness indicated.

3.5 FIELD QUALITY CONTROL

3.5.1 Field Density

Field in-place density shall be determined in accordance with ASTM D 1556 or ASTM D 2167.

3.6 #.1 SMOOTHNESS

Measurements for deviation from grade and cross section shown shall be taken in successive positions parallel to the road centerline with a 10 foot

straightedge. Measurements shall also be taken perpendicular to the road centerline at 50 foot intervals.

3.6.1 Thickness

The completed thickness of the base course shall be within 1/2 inch of the thickness indicated. The thickness of the base course shall be measured at intervals providing at least one measurement for at least each 500 square yards of base course. The depth measurement shall be made by test holes at least 3 inches in diameter. Where the measured thickness of the base course is more than 1/2 inch deficient, such areas shall be corrected by excavating to the required depth and replacing with new material. Where the measured thickness of the base course is 1/2 inch more than indicated, it will be considered as conforming with the requirements plus 1/2 inch, provided the surface of the base course is within 1/2 inch of established grade. The average job thickness shall be the average of the job measurements as specified above but within 1/4 inch of the thickness indicated.

3.7 TRAFFIC

Completed portions of the area may be opened to traffic, provided there is no marring or distorting of the surface by the traffic. Heavy equipment shall not be permitted except when necessary to construction, and then the area shall be protected against marring or damage to the completed work.

3.8 MAINTENANCE

The stabilized aggregate base course shall be maintained in a satisfactory condition until accepted. Maintenance shall include immediate repairs to any defects and shall be repeated as often as necessary to keep the area intact.

3.9 DISPOSAL OF UNSATISFACTORY MATERIALS

Removed in-place materials that are unsuitable for the base course material that is removed for the required correction of defective areas, and waste material and debris shall be disposed of off Government property.

END OF SECTION

SECTION 02511

CONCRETE SIDEWALKS AND CURBS AND GUTTERS

1 GENERAL

1.1 REFERENCES

The publications listed below form a part of this specification to the extent referenced. The publications are referred to in the text by basic designation only.

AMERICAN ASSOCIATION OF STATE HIGHWAY AND TRANSPORTATION OFFICIALS (AASHTO)

AASHTO M 182	(1991)Burlap Cloth Made from Jute or Kenaf

AMERICAN SOCIETY FOR TESTING AND MATERIALS (ASTM)

ASTM A 615	(1990) Deformed and Plain Billet-Steel Bars for Concrete Reinforcement
ASTM A 616	(1996) Rail-Steel Deformed and Plain Bars for Concrete Reinforcement
ASTM A 617	(1996) Axle-Steel Deformed and Plain Bars for Concrete Reinforcement
ASTM C 31	(1991) Making and Curing Concrete Test Specimens in the Field
ASTM C 143	(1990a) Slump of Hydraulic Cement Concrete
ASTM C 171	(1991) Sheet Materials for Curing Concrete
ASTM C 172	(1990) Sampling Freshly Mixed Concrete
ASTM C 173	(1978) Air Content of Freshly Mixed Concrete by the Volumetric Method
ASTM C 231	(1991b) Air Content of Freshly Mixed Concrete by the Pressure Method
ASTM C 309	(1991) Liquid Membrane-Forming Compounds for Curing Concrete
ASTM D 1751	(1983; R 1991) Preformed Expansion Joint Filler for Concrete Paving and Structural Construction (Nonextruding and Resilient Bituminous Types)
ASTM D 1752	(1984; R 1992) Preformed Sponge Rubber and Cork Expansion Joint Fillers for Concrete Paving and Structural Construction

ASTM D 3405	(1994) Joint Sealants, Hot-Applied, for Concrete and Asphalt Pavements

CORPS OF ENGINEERS (COE)

COE CRD-C 527	(1988) Standard Specification for Joint Sealants, Cold-Applied, Non-Jet-Fuel-Resistant, for Rigid and Flexible Pavements

FEDERAL SPECIFICATIONS(FS)

FS CCC-C-467	(Rev. C) Cloth,, Burlap, Jute (or Kenaf)
FS SS-S-1401	(Rev. C) Sealant, Joint, Non-Jet-Fuel-Resistant, Hot-Applied, for Portland Cement and Asphalt Concrete Pavements
FS TT-S-227	(Rev. E) Sealing Compound: Elastomeric Type, Multi-Component (For Caulking, Sealing, and Glazing in Buildings and Other Structures)
FS TT-S-230	(Rev. C) Sealant Compound: Elastomeric Type, Single Component, Chemically Curing (For Caulking, Sealing, and Glazing in Buildings and Other Structures)

U.S. ARMY CORPS OF ENGINEERS HANDBOOK FOR CEMENT AND CONCRETE (CRD)

CRD C 300	(1988) Membrane-Forming Compounds for Curing Concrete

1.2 SUBMITTALS

The following shall be submitted in accordance with Section 01330 "SUBMITTAL PROCEDURES":

SD-70 Test Reports

Copies of all test reports for tests specified in paragraphs "Concrete" and "Field Quality Control" shall be submitted within 24 hours of the completion of the test.

SD-76, Certificates of Compliance

Certificates of compliance shall be submitted for the concrete mix design, curing compound, and joint sealant materials specified under Part 2 : Products.

SD-91 Records

Copies of certified delivery tickets for all concrete used in the construction shall be submitted.

1.3 WEATHER LIMITATIONS

1.3.1 Placing During Cold Weather

Concrete placement shall be discontinued when the air temperature reaches 40 degrees F and is falling. Placement may begin when the air temperature reaches 35 degrees F and is rising. Provisions shall be made to protect the concrete from freezing during the specified curing period. If necessary to place concrete when the temperature of the air, aggregates, or water is below 35 degrees F, placement shall be approved in writing. Approval shall be contingent upon full conformance with the following provisions. The underlying material shall be prepared and protected so that it is entirely free of frost when the concrete is deposited. Mixing water shall be heated as necessary to result in the temperature of the in-place concrete being between 50 and 85 degrees F. Methods and equipment for heating shall be approved. The aggregates shall be free of ice, snow, and frozen lumps before entering the mixer. Covering and other means shall be provided for maintaining the concrete at a temperature of at least 50 degrees F for not less than 72 hours after placing, and at a temperature above freezing for the remainder of the curing period.

1.3.2 Placing During Warm Weather

The temperature of the concrete as placed shall not exceed 85 degrees F except where an approved retarder is used. The mixing water and/or aggregates shall be cooled, if necessary, to maintain a satisfactory placing temperature. In no case shall the placing temperature exceed 90 degrees F.

1.4 PLANT, EQUIPMENT, MACHINES, AND TOOLS

1.4.1 General Requirements

Plant, equipment, machines, and tools used in the work shall be subject to approval and shall be maintained in a satisfactory working condition at all times. The equipment shall have the capability of producing the required product, meeting grade controls, thickness control and smoothness requirements as specified. Use of the equipment shall be discontinued if it produces unsatisfactory results. The Contracting Officer shall have access at all times to the plant and equipment to ensure proper operation and compliance with specifications.

1.4.2 Slip Form Equipment

Slip form paver or curb forming machine, will be approved based on trial use on the job and shall be self-propelled, automatically controlled, crawler mounted, and capable of spreading, consolidating, and shaping the plastic concrete to the desired cross section in one pass.

2 PRODUCTS

2.1 CONCRETE

Concrete shall conform to the applicable requirements of Section 03300CONCRETE FOR BUILDING CONSTRUCTION except as otherwise specified. Concrete shall have a minimum compressive strength of 3500 psi at 28 days. Maximum size of aggregate shall be 1-1/2 inches.

2.1.1 Air Content

Mixtures shall have air content by volume of concrete of 5 to 7 percent, based on measurements made immediately after discharge from the mixer.

2.1.2 Slump

The concrete slump shall be 3 inches where determined in accordance with ASTM C 143.

2.1.3 Reinforcement Steel

Reinforcement bars shall conform to ASTM A 615, ASTM A 616 or ASTM A 617. Wire mesh reinforcement shall conform to ASTM A 185.

2.2 CONCRETE CURING MATERIALS

2.2.1 Impervious Sheet Materials

Impervious sheet materials shall conform to ASTM C 171, type optional, except that polyethylene film, if used, shall be white opaque.

2.2.2 Burlap

Burlap shall conform to FS CCC-C-467.

2.2.3 Membrane-Forming Curing Compound

Membrane-forming curing compound shall conform to CRD C 300. Non-pigmented compound shall contain a fugitive dye.

2.3 CONCRETE PROTECTION MATERIALS

Concrete protection materials shall be a linseed oil mixture of equal parts, by volume, of linseed oil and either mineral spirits, NAPTHA, or turpentine. At the option of the contractor, commercially prepared linseed oil mixtures, formulated specifically for application to concrete to provide protection against the action of deicing chemicals may be used, except that emulsified mixtures are not acceptable.

2.4 JOINT FILLER STRIPS

2.4.1 Contraction Joint Filler for Curb and Gutter

Contraction joint filler for curb and gutter shall consist of hard-pressed fiberboard.

2.4.2 Expansion Joint Filler, Premolded

Expansion joint filler, premolded, shall conform to ASTM D 1751 or ASTM D 1752, 3/8 inch thick, unless otherwise indicated.

2.5 JOINT SEALANTS

2.5.1 Joint Sealant, Cold-Applied

Joint sealant, cold-applied shall conform to FS TT-S-227 or FS TT-S-230.

2.5.2 Joint Sealant, Hot-Poured

Joint sealant, hot-poured shall conform to FS SS-S-1401.

2.6 FORM WORK

Form work shall be designed and constructed to insure that the finished concrete will conform accurately to the indicated dimensions, lines, and elevations, and within the tolerances specified. Forms shall be of wood or steel, straight, of sufficient strength to resist springing during depositing and consolidating concrete. Wood forms shall be surfaced plank, 2-inch nominal thickness, straight and free from warp, twist, loose knots, splits or other defects. Wood forms shall have a nominal length of 10 feet. Radius bends may be formed with 3/4-inch boards, laminated to the required thickness. Steel forms shall be channel-formed sections with a flat top surface and with welded braces at each end and at not less than two intermediate points. Ends of steel forms shall be interlocking and self-aligning. Steel forms shall include flexible forms for radius forming, corner forms, form spreaders, and fillers. Steel forms shall have a nominal length of 10 feet with a minimum of two welded stake pockets per form. Stake pins shall be solid steel rods with chamfered heads and pointed tips designed for use with steel forms.

2.6.1 Sidewalk Forms

Sidewalk forms shall be of a height equal to the full depth of the finished sidewalk.

2.6.2 Curb and Gutter Forms

Curb and gutter outside forms shall have a height equal to the full depth of the curb and gutter. The inside form of curb shall have batter and shall be securely fastened to and supported by the outside form. Rigid forms shall be provided for curb returns, except that benders or thin plank forms may be used for curb or curb returns with a radius of 10 feet or more, where grade changes occur in the return, or where the central angle is such that a rigid form with a central angle of 90 degrees cannot be used. Back forms for curb returns may be made of 1-1/2 inch benders, for the full height of the curb, cleated together.

3 EXECUTION

3.1 SUBGRADE PREPARATION

The subgrade shall be constructed to the specified grade and cross section prior to concrete placement. Subgrade for sidewalks shall be placed and compacted to conform with applicable requirements of Section 02221 "EXCAVATION, FILLING, AND BACKFILLING FOR BUILDINGS".

3.1.1 Sidewalk Subgrade

The subgrade shall be tested for grade and cross section with a template extending the full width of the sidewalk and supported between side forms.

3.1.2 Curb and Gutter Subgrade

The subgrade shall be tested for grade and cross section by means of a template extending the full width of the curb and gutter. The subgrade shall be of materials equal in bearing quality to the subgrade under the adjacent pavement for vehicular traffic. Compaction, stabilized base course, and subbase shall conform to the requirements specified for the adjacent asphalt pavement.

3.1.3 Maintenance of Subgrade

The subgrade shall be maintained in a smooth, compacted condition in conformity with the required section and established grade until the concrete is placed. The subgrade shall be in a moist condition when concrete is placed. The subgrade shall be prepared and protected so as to produce a subgrade free from frost when the concrete is deposited.

3.2 FORM SETTING

Forms shall be carefully set to the indicated alignment, grade and dimensions. Forms shall be held rigidly in place by a minimum of three stakes per form placed at intervals not to exceed 4 feet. Corners, deep sections, and radius bends shall have additional stakes and braces, as required. Clamps, spreaders, and braces shall be used where required to insure rigidity in the forms. Forms shall be removed without injuring the concrete. Bars or heavy tools shall not be used against the concrete in removing the forms. Any concrete found defective after form removal shall be promptly and satisfactorily repaired. Forms shall be cleaned and coated with form oil each time before concrete is placed. Wood forms may, instead, be thoroughly wetted with water before concrete is placed, except that with probable freezing temperatures, oiling is mandatory.

3.2.1 Sidewalks

Forms for sidewalks shall be set with the upper edge true to line and grade with an allowable tolerance of 1/8 inch in any 10-foot long section. After forms are set, grade and alignment shall be checked with a 10-foot straightedge. Forms shall have a transverse slope of 1/4 inch per foot with the low side adjacent to the roadway. Side forms shall not be removed for 12 hours after finishing has been completed.

3.2.2 Curb and Gutter

The forms of the front of the curb shall be removed not less than 2 hours nor more than 6 hours after the concrete has been placed. Forms at the back and front of curb and gutter shall remain in place until the face and top of the curb have been finished as specified for concrete finishing. Curb and gutter forms shall not be removed while the concrete is sufficiently plastic to slump in any direction.

3.3 SIDEWALK CONCRETE PLACEMENT AND FINISHING

3.3.1 Formed Sidewalks

Concrete shall be placed in the forms in one layer of such thickness that when consolidated and finished the sidewalks will be of the thickness indicated. After concrete has been placed in the forms, a strike-off guided

by side forms shall be used to bring the surface to proper section to be compacted. The concrete shall be consolidated with an approved vibrator, and the surface shall be finished to grade with a wood float, bull float, edged and broom finished.

3.3.2 Concrete Finishing

After straight edging, when most of the water sheen has disappeared, and just before the concrete hardens, the surface shall be finished to a smooth and uniformly fine granular or sandy texture free of waves, irregularities, or tool marks. A scored surface shall be produced by brooming with a fiber-bristle brush in a direction transverse to that of the sidewalk traffic.

3.3.3 Edge and Joint Finishing

All slab edges, not including those at formed joints, shall be finished carefully with an edger having a radius of 1/8 inch. Transverse joint shall be edged before brooming, and the brooming shall eliminate the flat surface left by the surface face of the edger. Corners and edges which have crumbled and areas which lack sufficient mortar for proper finishing shall be cleaned and filled solidly with a properly proportioned mortar mixture and then finished.

3.3.4 Surface and Thickness Tolerances

Finished surfaces shall not vary more than 5/16 inch from the testing edge of a 10-foot straightedge. Permissible deficiency in section thickness will be up to 1/4 inch.

3.4 CURB AND GUTTER CONCRETE PLACEMENT AND FINISHING

3.4.1 Curb and Gutter

Concrete shall be placed to the section required in a single lift. Consolidation shall be achieved by using approved mechanical vibrators.

3.4.2 Concrete Finishing

Exposed surfaces shall be floated and finished with a smooth wood float until true to grade and section and uniform in texture. Floated surfaces shall then be brushed with a fine-hair brush with longitudinal strokes. The edges of the curb and gutter and top of the curb and gutter shall be rounded with an edging tool to a radius of 1/2 inch. Immediately after removing the front curb and gutter form, the face of the curb and gutter shall be rubbed with a wood or concrete rubbing block and water until blemishes, form marks, and tool marks have been removed. The front curb and gutter surface, while still wet, shall be brushed in the same manner as the gutter and curb top. The top surface of gutter and entrance shall be finished to grade with a wood float.

3.5 #.1 JOINT FINISHING

Curb edges at formed joints shall be finished as directed.

3.5.1 Surface and Thickness Tolerances

Finished surfaces shall not vary more than 1/4 inch from the testing edge of a 10-foot straightedge. Permissible deficiency in section thickness will be up to 1/4 inch.

3.6 SIDEWALK JOINTS

Sidewalk joints shall be constructed to divide the surface into rectangular areas. Transverse contraction joints shall be spaced at a distance equal to the sidewalk width or 5 feet on centers, whichever is less and shall be continuous across the slab. Longitudinal contraction joints shall be constructed along the centerline of all sidewalks 10 feet or more in width. Transverse expansion joints shall be installed at sidewalk returns and opposite expansion joints in adjoining curb and gutters. Where the sidewalk is not in contact with the curb, transverse expansion joints shall be installed as indicated. Expansion joints shall be formed about structures and features which project through or into the sidewalk pavement, using an expansion joint filler of the type, thickness and width indicated.

3.6.1 Contraction Joints

The contraction joints shall be formed in the fresh concrete by cutting a groove in the top portion of the slab to a depth of at least one fourth of the sidewalk slab thickness using a jointer to cut the groove, or by sawing a groove in the hardened concrete with a power-driven saw.

3.6.2 Expansion Joints

Expansion joints shall be formed with 3/8 inch joint filler strips and spaced a minimum of 50 foot intervals. Joint filler shall be placed with top edge 1/4 inch below the surface and shall be held in place with steel pins or other devices to prevent warping of the filler during floating and finishing. Immediately after finishing operations are completed, joint edges shall be rounded with an edging tool having a radius of 1/8 inch, and concrete over the joint filler shall be removed. At the end of the curing period, expansion joints shall be carefully cleaned and filled with joint sealer. Concrete at the joint shall be surface dry and the atmospheric and pavement temperatures shall be above 50 degrees F at the time of application of joint-sealing materials. Joints shall be filled with sealer flush with the concrete surface in such manner as to minimize spilling on the walk surface. Spilled sealing material shall be removed immediately and the surface of the walk cleaned.

Expansion joints and the top 1 inch depth of gutter contraction joints shall be sealed with joint sealer. The joint opening shall be thoroughly cleaned by sandblasting before the sealing material is placed. Sealing shall be done so that the material will not be spilled on exposed surfaces of the concrete. Concrete at the joint shall be surface dry and atmospheric and concrete temperatures shall be above 50 degrees F at the time of application of joint sealing material. Excess material on exposed surfaces of the concrete shall be removed immediately and concrete surfaces cleaned.

3.7 CURB AND GUTTER JOINTS

Curb and gutter joints shall be constructed at right angles to the line of curb and gutter.

3.7.1 Contraction Joints

Contraction joints shall be constructed directly opposite contraction joints in abutting portland cement concrete pavements and spaced so that monolithic sections between curb returns will not be less than 5 feet nor greater than 15 feet in length. Contraction joints shall be constructed by means of 1/8-inch thick separators and of a section conforming to the cross section of the curb and gutter. Separators shall be removed as soon as practicable after concrete has set sufficiently to preserve the width and shape of the joint and prior to finishing.

3.7.2 Expansion Joints

Expansion joints shall be formed by means of preformed expansion joint filler material cut and shaped to the cross section of curb and gutter. Expansion joints shall be provided in rolled curb directly opposite expansion joints of abutting portland cement concrete pavement, and shall be of the same type and thickness as joints in the pavement. Where curb and gutter do not abut portland cement concrete pavement, expansion joints at least 3/8 inch in width shall be provided at intervals not exceeding 50 feet. Expansion joints shall be provided in non reinforced concrete gutter locations indicated. Expansion joints shall be sealed immediately following curing of the concrete or as soon thereafter as weather conditions permit.

Expansion joints and the top 1 inch depth of gutter contraction-joints shall be sealed with joint sealer. The joint opening shall be thoroughly cleaned before the sealing material is placed. Sealing shall be done so that the material will not be spilled on exposed surfaces of the concrete. Concrete at the joint shall be surface dry and atmospheric and concrete temperatures shall be above 50 degrees F at the time of application of joint sealing material. Excess material on exposed surfaces of the concrete shall be removed immediately and concrete surfaces cleaned.

3.8 CURING AND PROTECTION

3.8.1 General Requirements

Concrete shall be protected against loss of moisture and rapid temperature changes for at least 7 days from the beginning of the curing operation. Unhardened concrete shall be protected from rain and flowing water. All equipment needed for adequate curing and protection of the concrete shall be on hand and ready for use before actual concrete placement begins. Protection shall be provided as necessary to prevent cracking of the pavement due to temperature changes during the curing period.

3.8.1.1 Mat Method

The entire exposed surface shall be covered with two or more layers of burlap. Mats shall overlap each other at least 6 inches. The mat shall be thoroughly wetted with water prior to placing on concrete surface and shall be kept continuously in a saturated condition and in intimate contact with concrete for not less than 7 days.

3.8.1.2 Impervious Sheeting Method

The entire exposed surface shall be wetted with a fine spray of water and then covered with impervious sheeting material. Sheets shall be laid directly on the concrete surface with the light-colored side up and overlapped 12 inches when a continuous sheet is not used. The curing medium shall not be less than 18-inches wider than the concrete surface to be cured, and shall be securely weighted down by heavy wood planks, or a bank of moist earth placed along edges and laps in the sheets. Sheets shall be satisfactorily repaired or replaced if torn or otherwise damaged during curing. The curing medium shall remain on the concrete surface to be cured for not less than 7 days.

3.8.1.3 Membrane Curing Method

A uniform coating of white-pigmented membrane-curing compound shall be applied to the entire exposed surface of the concrete as soon after finishing as the free water has disappeared from the finished surface. Formed surfaces shall be coated immediately after the forms are removed and in no case longer than 1 hour after the removal of forms. Concrete shall not be allowed to dry before the application of the membrane. If any drying has occurred, the surface of the concrete shall be moistened with a fine spray of water and the curing compound applied as soon as the free water disappears. Curing compound shall be applied in two coats by hand-operated pressure sprayers at a coverage of approximately 200 square feet per gallon for both coats. The second coat shall be applied in a direction approximately at right angles to the direction of application of the first coat. The compound shall form a uniform, continuous, coherent film that will not check, crack, or peel and shall be free from pinholes or other imperfections. If pinholes, abrasion, or other discontinuities exist, an additional coat shall be applied to the affected areas within 30 minutes. Concrete surfaces that are subjected to heavy rainfall within 3 hours after the curing compound has been applied shall be resprayed by the method and at the coverage specified above. Areas where the curing compound is damaged by subsequent construction operations within the curing period shall be resprayed. Necessary precautions shall be taken to insure that the concrete is properly cured at sawed joints. Concrete surfaces to which membrane-curing compounds have been applied shall be adequately protected during the entire curing period from pedestrian and vehicular traffic, except as required for joint-sawing operations and surface tests, and from any other possible damage to the continuity of the membrane.

3.8.2 Backfilling

After curing, debris shall be removed and the area adjoining the concrete shall be backfilled, graded, and compacted to conform to the surrounding area in accordance with lines and grades indicated.

3.8.3 Protection

Completed concrete shall be protected from damage until accepted. The Contractor shall repair damaged concrete and clean concrete discolored during construction. Concrete that is damaged shall be removed and reconstructed for the entire length between regularly scheduled joints. Refinishing the damaged portion will not be acceptable. Removed damaged portions shall be disposed of as directed.

3.9 FIELD QUALITY CONTROL

3.9.1 General Requirements

The Contractor shall perform the inspection and tests described and meet the specified requirements for inspection details and frequency of testing as specified in section Contractor Quality Control. Based upon the results of these inspections and tests, the Contractor shall take the action and submit reports as required below, and any additional tests to insure that the requirements of these specifications are met.

3.9.2 Concrete Testing

3.9.2.1 Strength Testing

The Contractor shall provide molded concrete specimens for strength tests. The samples for strength tests shall be taken in accordance with ASTM C 172. Cylinders for acceptance shall be molded in conformance with ASTM C 31 by an approved testing laboratory. Concrete specified on the basis of compressive strength will be considered satisfactory if the averages of all sets of three consecutive strength test results equal or exceed the specified strength, and no individual strength test result falls below the specified strength by more than 500 psi.

3.9.2.2 Air Content

Air content shall be determined in accordance with ASTM C 173 or ASTM C 231. ASTM C 231 shall be used with concretes and mortars made with relatively dense natural aggregates. If results are out of tolerance, the placing foreman shall be notified and he shall take appropriate action to have the air content corrected at the plant. Additional tests for air content will be performed on each truckload of material until such time as the air content is within the tolerance specified.

3.9.2.3 Slump Test

Slump tests shall be made in accordance with ASTM C 143. Additional tests will be performed when excessive variation in the workability of the concrete is noted or when excessive crumbling or slumping is noticed along the edges of slip-formed concrete.

3.9.3 Thickness Evaluation

The anticipated thickness of the concrete shall be determined prior to placement by passing a template through the formed section or by measuring the depth of opening of the extrusion template of the curb forming machine. If a slip form paver is used for sidewalk placement, the subgrade shall be true to grade prior to concrete placement and the thickness will be determined by measuring each edge of the completed slab.

3.9.4 Surface Evaluation

The finished surface of each category of the completed work shall be uniform in color and free of blemishes and form or tool marks and meet surface smoothness requirements.

3.10 SURFACE DEFICIENCIES AND CORRECTIONS

3.10.1 Thickness Deficiency

When measurements indicate that the completed concrete section is deficient in thickness by more than 1/4 inch the deficient section will be removed, between regularly scheduled joints, and replaced.

3.10.2 Appearance

Exposed surfaces of the finished work will be inspected by the Government and any deficiencies in appearance will be identified. Areas which exhibit excessive cracking, discoloration, form marks, or tool marks or which are otherwise inconsistent with the overall appearances of the work shall be removed and replaced.

END OF SECTION

SECTION 02551

BITUMINOUS PAVING FOR ROADS, STREETS AND OPEN STORAGE AREAS

1 GENERAL

1.1 REFERENCES

The publications listed below form a part of this specification to the extent referenced. The publications are referred to in the text by basic designation only.

AMERICAN SOCIETY FOR TESTING AND MATERIALS (ASTM)

ASTM C 29	(1991a) Unit Weight and Voids in Aggregate
ASTM C 88	(1990) Soundness of Aggregates by Use of Sodium Sulfate or Magnesium Sulfate
ASTM C 117	(1995) Materials Finer than 75-micrometer (No 200) Sieve in Mineral Aggregates by Washing
ASTM C 127	(1988; R 1993) Specific Gravity and Absorption of Coarse Aggregate
ASTM C 128	(1988) Specific Gravity and Absorption of Fine Aggregate
ASTM C 131	(1989) Resistance to Degradation of Small-Size Coarse Aggregate by Abrasion and Impact in the Los Angeles Machine
ASTM C 136	(Rev A, 1995) Sieve Analysis of Fine and Coarse Aggregates
ASTM C 183	(Rev 1995) Sampling and the Amount of Testing of Hydraulic Cement
ASTM D 5	(1995) Penetration of Bituminous Materials
ASTM D 75	(1987; R 1992) Sampling Aggregates
ASTM D 140	(1993) Sampling Bituminous Materials
ASTM D 242	(1985; R 1990) Mineral Filler for Bituminous Paving Mixtures
ASTM D 422	(1963; R 1990) Particle-Size Analysis of Soils
ASTM D 946	(1982; R 1993) Penetration-Graded Asphalt Cement for Use in Pavement Construction
ASTM D 1250	(1980; R 1990) Petroleum Measurement Tables

ASTM D 1856	(1979; R 1995) Recovery of Asphalt from Solution by Abson Method
ASTM D 2041	(1991) Theoretical Maximum Specific Gravity and Density of Bituminous Paving Mixtures
ASTM D 2172	(1995) Quantitative Extraction of Bitumen from Bituminous Paving Mixtures
ASTM D 2216	(1990) Laboratory Determination of Water (Moisture) Content of Soil, and Rock
ASTM D 3381	(1983) Viscosity-Graded Asphalt Cement for Use in Pavement Construction
ASTM D 3515	(1989) Hot-Mixed, Hot-Laid Bituminous Paving Mixtures
ASTM D 4791	(1989) Flat or Elongated Particles in Coarse Aggregate

DEPARTMENT OF THE ARMY, CORPS OF ENGINEERS, HANDBOOK FOR CONCRETE AND CEMENT

CRD C 649 (95)	Standard Test Method for Unit Weight, Marshall Stability, and Flow of Bituminous Mixtures
CRD C 650 (95)	Standard Test Method for Density and Percent Voids in Compacted Bituminous Paving Mixtures
CRD C 651 (95)	Standard Gyratory Testing Machine Method for Design of Hot-Mix Bituminous Pavement Mixtures
CRD C 652 (95)	Standard Test Method for Measurement of Reduction in Marshall Stability of Bituminous Mixtures Caused by Immersion in Water

CORPS OF ENGINEERS (COE)

COE CRD-C-119	(1953; Rev Jun 1963) Flat and Elongated Particles in Coarse Aggregate

MILITARY STANDARDS (MIL-STD)

MIL-STD 620	(Rev A; Notice 1) Test Methods for Bituminous Paving Materials

1.2 SUBMITTALS

Government approval is required for submittals with a "GA" designation; submittals having an "FIO" designation are for information only. The following shall be submitted in accordance with Section 01330 SUBMITTAL PROCEDURES:

SD-09 Reports

Tests, Preproduction; GA.

Test reports for the following shall be submitted for approval prior to the start of production and shall meet all requirements specified in PART 2 (PRODUCTS).

a. Course Aggregate
- Percentage of wear (ASTM C 131)
- Percentage of loss (ASTM C 88 and ASTM C 131)
- Percentage of fractured faces
- Percent flat and elongated pieces (COE CRD-C-119)

b. Fine Aggregate
- Percent of natural sand content
- Percent of fractured faces
- Percentage of loss (ASTM C 88)

c. Aggregate Gradation

d. Job Mix Formula plots and test results including index of retained stability, and type of asphalt used.

Tests, Field; GA

Evaluation of test section and "lot" production placed in accordance with Paragraph: ACCEPTABILITY OF WORK.

1.3 PLANT, EQUIPMENT, MACHINES, AND TOOLS

1.3.1 General

The bituminous plant shall be of such capacity to produce the quantities of bituminous mixtures required. Hauling equipment, paving machines, rollers, miscellaneous equipment, and tools shall be provided in sufficient numbers and capacity and in proper working condition to place the bituminous paving mixtures at a rate equal to the plant output.

1.3.2 Mixing Plants

The mixing plant shall be an automatic or semiautomatic controlled commercially manufactured unit designed and operated to consistently produce a mixture within the job-mix formula (JMF).

1.3.3 Straightedge

The Contractor shall furnish and maintain at the site, in good condition, one 10-foot straightedge for each bituminous paver. Straightedge shall be made available for Government use. Straightedges shall be constructed of aluminum or other lightweight metal and shall have blades of box or box-girder cross section with flat bottom reinforced to insure rigidity and accuracy. Straightedges shall have handles to facilitate movement on pavement.

1.4 WEATHER LIMITATIONS

Unless otherwise directed, bituminous courses shall not be constructed when temperature of the surface of the existing pavement or base course is below 40 degrees F or wet. When paving in temperatures below 50 degrees F or during the months between 1 October and 1 April pneumatic tired rollers shall be used as required in paragraph "Placing". Tack coat shall be applied when temperatures are above 40 degrees F and surfaces are dry.

1.5 PROTECTION OF PAVEMENT

After final rolling, no vehicular traffic of any kind shall be permitted on the pavement until the pavement has cooled to 140 degrees F.

1.6 GRADE AND SURFACE-SMOOTHNESS REQUIREMENTS

Finished surface of bituminous courses, when tested as specified below and in paragraph ACCEPTABILITY OF WORK, shall conform to gradeline and elevations shown and to surface-smoothness requirements specified.

1.6.1 Plan Grade

The grade of the completed surface shall not deviate more than 0.05 foot from the plan grade.

1.6.2 Surface Smoothness

When a 10-foot straightedge is laid on the surface parallel with the centerline of the paved area or transverse from crown to pavement edge, the surface shall vary not more than 1/4 inch from the straightedge.

1.7 GRADE CONTROL

Lines and grades shall be established and maintained by means of line and grade stakes placed at site of work in accordance with the SPECIAL CLAUSES. Finished pavement grade lines and elevations shall be established and controlled at the site of work by the Contractor.

1.8 SAMPLING AND TESTING

1.9 #.1 AGGREGATES

1.10 #.1 GENERAL

Samples of aggregates shall be taken by the Contractor prior to the start of production for aggregate quality tests and mix design. Unless otherwise directed, ASTM D 75 shall be used in sampling coarse and fine aggregate, and ASTM C 183 shall be used in sampling mineral filler. All tests necessary to determine compliance with requirements specified herein will be made by the Contractor.

1.11 #.1 SOURCES

Sources of aggregates shall be selected well in advance of the time the materials are required in the work. Test reports shall be submitted before starting production, indicating that aggregates meet all quality requirements specified herein. Approval of the source of aggregate does not

relieve the Contractor of responsibility for delivery at the jobsite of aggregates that meet the requirements specified herein.

1.12 #.1 BITUMINOUS MATERIALS

Samples of bituminous materials and mixes shall be the Contractor's responsibility and shall be performed by an approved independent commercial testing laboratory in accordance with Section 01400.

1.13 DELIVERY, STORAGE, AND HANDLING OF MATERIALS

1.13.1 Mineral Aggregates

Mineral aggregates shall be delivered to the site of the bituminous mixing plant and stockpiled in such manner as to preclude fracturing of aggregate particles, segregation, contamination, or intermingling of different materials in the stockpiles or cold-feed hoppers. Mineral filler shall be delivered, stored, and introduced into the mixing plant in a manner to preclude exposure to moisture or other detrimental conditions.

1.13.2 Bituminous Materials

Bituminous materials shall be maintained at appropriate temperature during storage but shall not be heated by application of direct flame to walls of storage tanks or transfer lines. Storage tanks, transfer lines, and weigh buckets shall be thoroughly cleaned before a different type or grade of bitumen is introduced into the system. The asphalt cement shall be heated sufficiently to allow satisfactory pumping of the material; however, the storage temperature shall be maintained below 300 degrees F.

1.14 ACCESS TO PLANT AND EQUIPMENT

The Contracting Officer shall have access at all times to all parts of the paving plant for checking adequacy of the equipment in use; inspecting operation of the plant; verifying weights, proportions, and character of materials; and checking temperatures maintained in preparation of the mixtures.

2 PRODUCTS

2.1 BITUMINOUS HOT MIX

The mix design shall consist of coarse aggregate, fine aggregate, bituminous material, and, if required, mineral filler or approved additives and shall conform to the requirements contained in paragraphs "PROPORTIONING OF MIXTURE" and "ACCEPTABILITY OF WORK."

2.1.1 Aggregates

Aggregates shall consist of crushed stone, crushed gravel, crushed slag, screening, sand, and mineral filler, as required. The portion of materials retained on the No. 4 sieve shall be known as coarse aggregate, the portion passing the No. 4 sieve and retained on the No. 200 sieve as fine aggregate, and the portion passing the No. 200 sieve as mineral filler. Aggregate gradation shall conform to gradation(s) specified in TABLE I. TABLE I is based on aggregates of uniform specific gravity; the percentage passing various sieves may be changed by the Contracting Officer when aggregates of

varying specific gravities are used. Adjustments of percentage passing various sieves may be changed by the Contracting Officer when aggregates vary by more than 0.2 in specific gravity.

TABLE I. AGGREGATE GRADATION

Sieve Size	Percent Passing
5/8"	100
1/2"	90-100
3/8"	75-90
1/4"	55-75
U.S.No.10	32-48
U.S.No.40	11-24
U.S.No.80	6-15
U.S.No.200	3-7

2.1.1.1 Coarse Aggregate

Coarse aggregate shall consist of clean, sound, durable particles meeting the following requirements.

a. Percentage of loss shall not exceed 40 after 500 revolutions, as determined in accordance with ASTM C 131.

b. Percentage of loss shall not exceed 18 after 5 cycles performed in accordance with ASTM C 88, using magnesium sulfate.

c. The dry weight of crushed slag shall not be less than 75 pcf, as determined in accordance with ASTM C 29.

d. Crushed gravel retained on the No. 4 sieve and each coarser sieve shall contain at least 75 percent by weight of crushed pieces having one or more fractured faces with the area of each face equal to at least 75 percent of the smallest mid sectional area of piece. When two fractures are contiguous, the angle between planes of fractures shall be at least 30 degrees to count as two fractured faces.

e. Particle shape of crushed aggregates shall be essentially cubical. The quantity of flat and elongated particles in any sieve size shall not exceed 20 percent by weight, when determined in accordance with COE CRD-C-119.

2.1.1.2 Fine Aggregate

Fine aggregate shall consist of clean, sound, durable particles including natural sand or crushed stone, slag, or gravel that meets requirements for wear and soundness specified for coarse aggregate. Fine aggregate produced by crushing gravel shall have at least 90 percent by weight of crushed particles having two or more fractured faces in the portion retained on the No. 30 sieve. This requirement shall apply to the material before blending with natural sand when blending is necessary. Quantity of natural sand to be added to the mixture shall not exceed 25 percent by weight of coarse and

fine aggregate and material passing the No. 200 sieve. Natural sand shall be clean and free from clay and organic matter. Percentage of loss shall not exceed 15 after five cycles of the soundness test performed in accordance with ASTM C 88, using magnesium sulfate.

2.1.1.3 Mineral Filler

Mineral filler shall conform to ASTM D 242.

Grain size shall be determined in accordance with ASTM D 422.

2.1.2 Bituminous Material

Asphalt cement shall conform to ASTM D 3381, Grade AR - 4000W.

2.1.3 Additives

The use of additives such as anti stripping and anti foaming agents is subject to approval.

2.2 PROPORTIONING OF MIXTURE

2.2.1 Job Mix Formula

The Job-Mix Formula shall be developed by the Contractor using CRD C 651 (95) using Marshall Mix Design 50 blow criteria. The mix design shall meet the test requirements presented in this section and shall show the following:

a. Graphical Plots for a minimum of four asphalt contents for

Stability	vs. A/C content
Unit wt. Mix	vs. A/C content
Percent Total Voids Filled	vs. A/C content
Flow	vs. A/C content

The optimum asphalt content shall be calculated by averaging the peaks of curves 1 through 4 and the stability, flow, and voids must fall within criteria specified in paragraph: Test Properties of Bituminous Mixtures.

b. The percentage and specific gravity of each bin fraction of aggregate. (This will be used to determine the theoretical specific gravity.)

c. Absorption of the entire blend.

d. Specific gravity of the asphalt.

e. Reduction in Stability by Immersion.

Previously established test results will be accepted provided that the tests were performed within the last 2 years and conform to requirements specified above. The job-mix-formula will be allowed tolerances given in Table 2 herein.

TABLE II. JOB-MIX TOLERANCES

Material	Tolerance, Plus or Minus
Aggregate passing No. 4 sieve or larger	5 percent
Aggregate passing Nos. 8, 16, 30, and 50 sieves	4 percent
Aggregate passing Nos. 100 and 200 sieves	2 percent
Bitumen	0.30 percent
Temperature of mixing	25 degrees F

2.2.2 Test Properties of Bituminous Mixtures

Finished mixture shall meet requirements described below when tested in accordance with CRD C 659 and CRD C 650 (95). All samples will be compacted with 50 blows of specified hammer on each side of sample. Bituminous mixture shall meet the requirements specified below.

2.2.2.1 Stability, Flow, and Voids

Requirements for stability, flow, and voids are shown in TABLES III and IV for nonabsorptive and absorptive aggregates, respectively.

TABLE III. NONABSORPTIVE-AGGREGATE MIXTURE

Stability minimum, pounds	1000
Flow maximum, 1/100-inch units	20
Voids total mix, percent (1)	3-5
Voids filled with bitumen, percent (2)	75-85

TABLE IV. ABSORPTIVE-AGGREGATE MIXTURE

Stability minimum, pounds	1000
Flow maximum, 1/100-inch units	20
Voids total mix, percent (1)	2-4
Voids filled with bitumen, percent (2)	80-90

a. When the water-absorption value of the entire blend of aggregate does not exceed 2.5 percent as determined in accordance with ASTM C 127and ASTM C 128, the aggregate is designated as nonabsorptive. The theoretical specific gravity computed from the apparent specific gravity or ASTM D 2041 will be used in computing voids total mix and voids filled with bitumen, and the mixture shall meet requirements in TABLE III.

b. When the water-absorption value of the entire blend of aggregate exceeds 2.5 percent as determined in accordance with ASTM C 127 and ASTM C 128, the aggregate is designated as absorptive. The theoretical specific gravity computed from the bulk-impregnated specific gravity method contained in ASTM D 2041 shall be used in

computing percentages of voids total mix and voids filled with bitumen; the mixture shall meet requirements in TABLE IV.

2.2.2.2 Stability

The index of retained stability must be greater than 75 percent as determined by CRD C 652 (95). When the index of retained stability is less than 75, the aggregate stripping tendencies may be countered by the use of hydrated lime. The hydrated lime is considered as mineral filler and should be considered in the gradation requirements. The amount of hydrated lime or anti stripping agent added to bitumen shall be sufficient, as approved, to produce an index of retained stability of not less than 75 percent. No additional payment will be made to the Contractor for addition of anti stripping agent required.

3 EXECUTION

3.1 BASE COURSE CONDITIONING

The surface of the base course will be inspected for adequate compaction and surface tolerances specified. Unsatisfactory areas shall be corrected.

3.2 EXISTING PAVEMENT CONDITIONING

3.3 PREPARATION OF BITUMINOUS MIXTURES

Rates of feed of aggregates shall be regulated so that the moisture content and temperature of aggregates will be within specified tolerances. Aggregates, mineral filler, and bitumen shall be conveyed into the mixer in proportionate quantities required to meet the JMF. Mixing time shall be as required to obtain a uniform coating of the aggregate with the bituminous material. Temperature of bitumen at time of mixing shall not exceed 300 degrees F. Temperature of aggregate and mineral filler in the mixer shall not exceed 325 degrees F when bitumen is added. Overheated and carbonized mixtures or mixtures that foam shall not be used.

3.4 STORAGE OF BITUMINOUS PAVING MIXTURE

Storage shall conform to the applicable requirements of ASTM D 3515.

3.5 TRANSPORTATION OF BITUMINOUS MIXTURE

Transportation from paving plant to site shall be in trucks having tight, clean, smooth beds lightly coated with an approved releasing agent to prevent adhesion of the mixture to the truck bodies. Excessive releasing agent shall be drained prior to loading. Each load shall be covered with canvas or other approved material of ample size to protect mixture from weather and to prevent loss of heat. Loads that have crusts of cold, unworkable material or that have become wet will be rejected. Hauling over freshly placed material will not be permitted.

3.6 SURFACE PREPARATION OF UNDERLYING COURSE

Prior to placing of the intermediate or wearing course, the underlying course shall be cleaned of all foreign or objectionable matter. Power brooms and hand brooms shall be used to clean underlying asphalt courses.

3.7 PLACING

Bituminous courses shall be constructed only when the base course or existing pavement is dry. Bituminous mixtures shall not be placed without ample time to complete spreading and rolling during daylight hours, unless approved satisfactory artificial lighting is provided. If bituminous materials are placed in more than 1 lift, the longitudinal joints shall be offset by at least 1 foot. The type of rollers to be used and their relative position in the compaction sequence shall generally be the Contractor's option, provided specification densities are attained. An exception shall be that the pneumatic tired roller shall be used between 1 October and 1 April or when ambient temperature is below 50 degrees F. Coverages with a vibratory steel wheel roller may precede pneumatic tired rolling.

3.7.1 General Requirements for Use of Mechanical Spreader

Range of temperatures of mixtures, when dumped into the mechanical spreader, shall be as determined by the Contracting Officer. Mixtures having temperatures less than 225 degrees F when dumped into the mechanical spreader shall not be used. The mechanical spreader shall be adjusted and the speed regulated so that the surface of the course being laid will be smooth and continuous without tears and pulls, and of such depth that, when compacted, the surface will conform to the cross section indicated. Material placed shall conform to requirements specified in paragraph "ACCEPTABILITY OF WORK." Placing of the mixture shall be as nearly continuous as possible, and speed of placing shall be adjusted, as directed, to permit proper rolling. When segregation occurs in the mixture during placing, the spreading operation shall be suspended until the cause is determined and corrected.

3.7.2 Placing Strips Succeeding Initial Strips

In placing each succeeding strip after initial strip has been spread and compacted as specified below, the screed of the mechanical spreader shall overlap the previously placed strip 4 to 6 inches and be sufficiently high so that compaction produces a smooth dense joint. Mixture placed on the edge of a previously placed strip by the mechanical spreader shall be pushed back to the edge of the strip by use of a lute. Excess mixture shall be removed and wasted.

3.7.3 Hand spreading in Lieu of Machine Spreading

In areas where the use of machine spreading is impractical, the mixture shall be spread by hand. Spreading shall be in a manner to prevent segregation. The mixture shall be spread uniformly with hot rakes in a loose layer of thickness that, when compacted, will conform to required grade, density, and thickness.

3.8 COMPACTION OF MIXTURE

Rolling shall begin as soon after placing as the mixture will bear a roller without undue displacement. Delays in rolling freshly spread mixture will not be permitted. Vibratory rollers shall not be operated in the vibratory mode when the internal temperature of the mix is less than 176 degrees F. Tests for smoothness shall be made by the Contractor during construction. Deficiencies shall be corrected so that the finished course will conform to

requirements for grade and smoothness specified herein. Rolling shall be continued until a mat and joint density of 95.0 to 100.0 percent of density of laboratory compacted specimens of the same mixture is obtained. After paving operations are complete, crown, grade, and smoothness will be checked by the contractor for compliance and will be evaluated as specified in paragraph "ACCEPTABILITY OF WORK."

3.8.1 Correcting Deficient Areas

Mixtures that become contaminated or are defective shall be removed to the full thickness of the course. Edges of the area to be removed shall be cut so that sides are perpendicular and parallel to the direction of traffic and so that the edges are vertical. Edges shall be sprayed with tack coat. Fresh paving mixture shall be placed in the excavated areas in sufficient quantity so that the finished surface will conform to grade and smoothness requirements. Paving mixture shall be compacted to the density specified herein. Skin patching of an area that has been rolled shall not be permitted.

3.9 JOINTS

3.9.1 General

Joints between old and new pavements, between successive work days, or joints that have become cold (less than 175 degrees F) shall be made to insure continuous bond between the old and new sections of the course. All joints shall have the same texture and smoothness as other sections of the course. Tack coat material shall be applied far enough in advance of placement of a fresh mixture to insure adequate curing. Care shall be taken to prevent damage or contamination of the sprayed surface.

3.9.2 Transverse Joints

The roller shall pass over the unprotected end of a strip of freshly placed material only when placing is discontinued or delivery of the mixture is interrupted to the extent that the material in place may become cold. In all cases, prior to continuing placement, the edge of previously placed pavement shall be cut back to expose an even vertical surface for full thickness of the course. In continuing placement of a strip, the mechanical spreader shall be positioned on the transverse joint so that sufficient hot mixture will be spread to obtain a joint after rolling that conforms to the required density and smoothness specified herein.

3.9.3 Longitudinal Joints

Edges of a previously placed strip shall be prepared such that the pavement in and immediately adjacent to the joint between this strip and the succeeding strip meets the requirements for grade, smoothness, and density specified in paragraph "ACCEPTABILITY OF WORK."

3.10 #.1 ACCEPTABILITY OF WORK

3.11 #.1 GENERAL

A lot shall be that quantity of construction that will be evaluated for compliance with specification requirements. A lot shall be equal to one day's production. The Contractor shall perform all tests as specified

herein at the frequency specified in Section titled: CONTRACTOR QUALITY CONTROL.

3.12 #.1 LOT EVALUATION

Each lot shall be evaluated for gradation, asphalt content, density, and surface smoothness.

3.13 #.1 LOT FAILURE

When a lot of material fails to meet the specification requirements, that lot shall be removed and replaced.

3.14 #.1 AGGREGATE GRADATION

The aggregate gradation shall fall within the job mix tolerances specified in Table II.

3.15 #.1 ASPHALT CONTENT

The asphalt content must be within .30 percent of the job mix formula.

3.16 #.1 DENSITY

The average mat and joint densities will be expressed as a percentage of the laboratory density. The laboratory density for each lot will be determined in accordance with CRD C 649 (95).

3.17 #.1 FIELD DENSITY

The field density shall be determined and the average mat and joint density shall be 95 percent compacted specimens of the same mixture.

3.18 #.1 SURFACE SMOOTHNESS

After completion of final rolling of a lot, the compacted surface will be tested by the Contractor in the presence of a Contracting Officer with a 10 foot straightedge. Measurements will be made perpendicular to and across all mats at distances along the mat not to exceed 25 feet. Location and deviation from straightedge of all measurements will be recorded. Any joint or mat area surface deviation which exceeds the tolerance given in paragraph "GRADE AND SURFACE-SMOOTHNESS REQUIREMENTS" by more than 50 percent shall be corrected to meet the specification requirements. The Contractor shall remove the deficient area and replace with fresh paving mixture at no additional cost to the Government. Sufficient material shall be removed to allow at least 1 inch of asphalt concrete to be placed. Skin patching for correcting low areas or planing for correcting high areas shall not be permitted.

END OF SECTION

SECTION 02558

BITUMINOUS TACK COAT

1 GENERAL

1.1 REFERENCES

The publications listed below form a part of this specification to the extent referenced. The publications are referred to in the text by basic designation only.

AMERICAN ASSOCIATION OF STATE HIGHWAY AND TRANSPORTATION OFFICIALS (AASHTO)

AASHTO M 20	(1970) Penetration Graded Asphalt Cement
AASHTO M 81	(1992) Cut-Back Asphalt (Rapid-Curing Type)
AASHTO M 82	(1975) Cut-Back Asphalt (Medium-Curing Type)
AASHTO M 226	(1980) Viscosity Graded Asphalt Cement
AASHTO T 40	(1978; R 1983) Sampling Bituminous Materials

AMERICAN SOCIETY OF TESTING AND MATERIALS (ASTM)

ASTM D 140	(1993) Sampling Bituminous Materials
ASTM D 946	(1982; R 1993) Penetration-Graded Asphalt Cement for Use in Pavement Construction
ASTM D 977	(1991) Emulsified Asphalt
ASTM D 1250	(1980; R 1990) Petroleum Measurement Tables
ASTM D 2026	(1972; R 1993) Cutback Asphalt (Slow-Curing Type)
ASTM D 2027	(1976; R 1992) Cutback Asphalt (Medium-Curing Type)
ASTM D 2028	(1976; R 1992) Cutback Asphalt (Rapid-Curing Type)
ASTM D 2397	(1994) Cationic Emulsified Asphalt
ASTM D 2995	(1993) Determining Application Rate of Bituminous Distributors
ASTM D 3381	(1992) Viscosity-Graded Asphalt Cement for Use in Pavement Construction

1.2 SUBMITTALS

Government approval is required for submittals with a "GA" designation; submittals having an "FIO" designation are for information only. The following shall be submitted in accordance with Section 01330 "SUBMITTAL PROCEDURES":

SD-09 Reports

Tests; FIO.

Copies of all test results for bituminous materials, within 24 hours of completion of tests. Certified copies of the manufacturer's test reports indicating compliance with applicable specified requirements, not less than 30 days before the material is required in the work.

1.3 PLANT, EQUIPMENT, MACHINES AND TOOLS

1.3.1 General Requirements

Equipment, machines and tools used in the work shall be subject to approval and shall be maintained in a satisfactory working condition at all times.

1.4 WEATHER LIMITATIONS

Bituminous coat shall be applied only when the surface to receive the bituminous coat is dry. Bituminous coat shall be applied only when the atmospheric temperature in the shade is 50 degrees F or above and when the temperature has not been below 36 degrees F for the 12 hours prior to application.

2 PART 2 PRODUCTS

2.1 TACK COAT

Heated cutback asphalt or Emulsified asphalt shall conform to ASTM D 2028, ASTM D 977 or AASHTO M 81 Grade 70.

3 EXECUTION

3.1 PREPARATION OF SURFACE

Immediately before applying the tack coat, all loose material, dirt, clay, oil, or other objectionable material shall be removed from the surface to be treated. The surface shall be dry and clean at the time of treatment.

3.2 APPLICATION RATE

The exact quantities within the range specified, which may be varied to suit field conditions, will be determined by the Contracting Officer.

3.2.1 Tack Coat

Bituminous material for the tack coat shall be applied in quantities of not less than 0.20 liter nor more than 0.70 liter per square yard of pavement surface.

3.3 APPLICATION TEMPERATURE

3.3.1 Viscosity Relationship

Asphalt application temperature shall provide an application viscosity between 10 and 60 seconds, Saybolt Furol, or between 20 and 120 square mm/sec, kinematic. The temperature viscosity relation shall be furnished to the Contracting Officer.

3.3.2 Temperature Ranges

The viscosity requirements shall determine the application temperature to be used. The following is a normal range of application temperatures:

Liquid Asphalts	
RC-70	120-190 degrees F
Viscosity Grades	
AR 4000	plus 290 degrees F
Emulsions	
RS-1	75-130 degrees F
SS-1	75-130 degrees F
SS-1h	75-130 degrees F
CRS-1	75-130 degrees F
CSS-1	75-130 degrees F
CSS-1h 3	75-160 degrees F

*These temperature ranges exceed the flash point of the material and care should be taken in their heating.

3.4 APPLICATION

Following preparation and subsequent inspection of the surface, the bituminous coat shall be applied at the specified rate with uniform distribution over the surface to be treated. All areas and spots missed by the distributor shall be properly treated. Until the new asphalt concrete pavement is abutted, the surface shall be maintained by protecting the surface against damage and by repairing deficient areas at no additional cost to the Government. If required, clean dry sand shall be spread to effectively blot up any excess bituminous material. No smoking, fires, or flames other than those from the heaters that are a part of the equipment shall be permitted within 25 feet of heating, distributing, and transferring operations of bituminous material other than bituminous emulsions.

3.4.1 Tack Coat Trial Application Rate

Unless otherwise authorized, the trial application rate of bituminous tack coat materials shall be applied in the amount of 0.04 gallons per square yard. Other trial applications shall be made using various amounts of material as may be deemed necessary.

END OF SECTION

SECTION 02580

PAVEMENT MARKINGS
02/91

1 GENERAL

1.1 REFERENCES

The publications listed below form a part of this specification to the extent referenced. The publications are referred to in the text by basic designation only.

AMERICAN ASSOCIATION OF STATE HIGHWAY AND TRANSPORTATION OFFICIALS (AASHTO)

AASHTO M 247	(1981; Rev 1986) Glass Beads Used in Traffic Paint
AASHTO M 248	(1991I) Ready-Mixed White and Yellow Traffic Paints

AMERICAN SOCIETY FOR TESTING AND MATERIALS (ASTM)

ASTM D 792	(1991) Density and Specific Gravity (Relative Density) of Plastics by Displacement
ASTM D 4280	(1995) Extended Life Type, Non plowable, Prismatic, Raised, Retroreflective Pavement Markers
ASTM D 4505	(1992) Preformed Plastic Pavement Marking Tape for Extended Service Life
ASTM E 28	(1992) Softening Point by Ring-and-Ball Apparatus

FEDERAL SPECIFICATIONS (FS)

FS TT-B-1325	(Rev C) Beads (Glass Spheres) Retro-Reflective (Metric)
FS TT-P-1952	(Rev D) Paint, Traffic and Airfield Marking, Waterborne (Metric)

1.2 SUBMITTALS

Government approval is required for submittals with a "GA" designation; submittals having an "FIO" designation are for information only. The following shall be submitted in accordance with Section 01330 SUBMITTAL PROCEDURES:

SD-01 Data

Equipment Lists; GA.

Lists of proposed equipment to be used in performance of construction work, including descriptive data, and notifications of proposed Contractor actions as specified in this section.

SD-06 Instructions

Mixing, Thinning and Application; FIO.

Manufacturer's current printed product description and Material Safety Data Sheets (MSDS) for each type paint/color proposed for use.

SD-09 Reports

Material Tests; GA.

Certified copies of the test reports, prior to the use of the materials at the jobsite. Testing shall be performed in an approved independent laboratory.

1.3 DELIVERY AND STORAGE

All materials shall be delivered and stored in sealed containers that plainly show the designated name, formula or specification number, batch number, color, date of manufacture, manufacturer's name, and directions, all of which shall be plainly legible at time of use.

1.4 EQUIPMENT

All machines, tools and equipment used in the performance of the work shall be approved and maintained in satisfactory operating condition. Equipment operating on roads will display low speed traffic markings.

1.5 HAND-OPERATED, PUSH-TYPE MACHINES

All machines, tools, and equipment used in performance of the work shall be approved and maintained in satisfactory operating condition. Hand-operated push-type machines of a type commonly used for application of paint to pavement surfaces shall be acceptable for marking small streets and parking areas. Applicator machine shall be equipped with the necessary paint tanks and spraying nozzles, and shall be capable of applying paint uniformly at coverage specified. Sandblasting equipment shall be provided as required for cleaning surfaces to be painted. Hand-operated spray guns shall be provided for use in areas where push-type machines cannot be used.

2 PRODUCTS

2.1 PAINT

The paint shall be homogeneous, easily stirred to smooth consistency, and shall show no hard settlement or other objectionable characteristics during a storage period of 6 months. Paint for roads and streets shall conform to AASHTO M 248, color as indicated to match existing pavement markings for the specific application at McChord Air Force Base.. Pavement marking paints shall comply with applicable state and local laws enacted to ensure compliance with Federal Clean Air Standards. Paint materials shall conform to the restrictions of the local Air Pollution Control District.

2.2 REFLECTIVE MEDIA

Reflective media for airfields shall conform to FS TT-B-1325, Type III. Reflective media for roads and streets shall conform to FS TT-B-1325, Type I, Gradation A, or AASHTO M 247, Type I.

3 EXECUTION

3.1 SURFACE PREPARATION

Surfaces to be marked shall be thoroughly cleaned before application of the pavement marking material. Dust, dirt, and other granular surface deposits shall be removed by sweeping, blowing with compressed air, rinsing with water or a combination of these methods as required. Rubber deposits, surface laitance, existing paint markings, and other coatings adhering to the pavement shall be completely removed with scrapers, wire brushes, sandblasting, approved chemicals, or mechanical abrasion as directed. Areas of old pavement affected with oil or grease shall be scrubbed with several applications of trisodium phosphate solution or other approved detergent or degreaser, and rinsed thoroughly after each application. After cleaning, oil-soaked areas shall be sealed with cut shellac to prevent bleeding through the new paint. Pavement surfaces shall be allowed to dry, when water is used for cleaning, prior to striping or marking. Surfaces shall be recleaned, when work has been stopped due to rain.

3.2 APPLICATION

All pavement markings and patterns shall be placed as shown on the plans.

3.2.1 Paint

Paint shall be applied to clean, dry surfaces, and only when air and pavement temperatures are above 40 degrees F and less than 95 degrees F. Paint temperature shall be maintained within these same limits. New asphalt pavement surfaces and new portland concrete cement shall be allowed to cure for a period of not less than 30 days before applications of paint. Paint shall be applied pneumatically with approved equipment at rate of coverage specified herein. The Contractor shall provide guide lines and templates as necessary to control paint application. Special precautions shall be taken in marking numbers, letters, and symbols. Edges of markings shall be sharply outlined.

3.2.1.1 Rate of Application

Paint shall be applied evenly to the pavement surface to be coated at a rate of 105 plus or minus 5 square feet per gallon.

3.2.1.2 Drying

The maximum drying time requirements of the paint specifications will be strictly enforced to prevent undue softening of bitumen, and pickup, displacement, or discoloration by tires of traffic. If there is a delay in drying of the markings, painting operations shall be discontinued until cause of the slow drying is determined and corrected.

3.2.2 Reflective Media

Application of reflective media shall immediately follow application of pigmented binder. Drop-on application of glass spheres shall be accomplished to insure that reflective media is evenly distributed at the specified rate of coverage. Should there be malfunction of either paint applicator or reflective media dispenser, operations shall be discontinued immediately until deficiency is corrected.

SECTION 02660

WATER DISTRIBUTION

1 GENERAL

1.1 REFERENCES

The publications listed below form a part of this specification to the extent referenced. The publications are referred to in the text by basic designation only.

AMERICAN SOCIETY FOR TESTING AND MATERIALS (ASTM)

ASTM D 1784	(1992) Rigid Poly(Vinyl Chloride) (PVC) Compounds and Chlorinated Poly(Vinyl Chloride) (CPVC) Compounds

AMERICAN WATER WORKS ASSOCIATION (AWWA)

AWWA B300	(1992) Hypochlorites
AWWA B301	(1992) Liquid Chlorine
AWWA C104	(1990) Cement-Mortar Lining for Ductile-Iron Pipe and Fittings for Water
AWWA C105	(1988) Polyethylene Encasement for Ductile-Iron Piping for Water and Other Liquids
AWWA C110	(1993) Ductile-Iron and Gray-Iron Fittings, 3 In. Through 48 In. (75 mm through 1200 mm), for Water and Other Liquids
AWWA C111	(1990) Rubber-Gasket Joints for Ductile-Iron Pressure Pipe and Fittings
AWWA C151	(1991) Ductile-Iron Pipe, Centrifugally Cast, for Water or Other Liquids
AWWA C153	(1994) Ductile-Iron Compact Fittings, 3 In. Through 16 In., for Water and Other Liquids
AWWA C500	(1993) Gate Valves for Water and Sewerage Systems
AWWA C502	(1985) Dry Barrel Fire Hydrants
AWWA C509	(1994) Resilient-Seated Gate Valves for Water and Sewerage Systems
AWWA C600	(1993) Installation of Ductile-Iron Water Mains and Their Appurtenances
AWWA C606	(1987) Grooved and Shouldered Joints

AWWA C900	(1989; c900a) Polyvinyl Chloride (PVC) Pressure Pipe, 4 In. Through 12 In., for Water Distribution
AWWA M23	(1980) Manual: PVC Pipe - Design and Installation

ASBESTOS CEMENT PIPE PRODUCERS ASSOCIATION (ACPPA)

ACPPA 01	(1988) Recommended Work Practices for A/C Pipe

CODE OF FEDERAL REGULATIONS (CFR)

CFR	(1991; Rev; July 1991) Labor

NATIONAL FIRE PROTECTION ASSOCIATION (NFPA)

NFPA 24	(1987) Installation of Private Fire Service Mains and Their Appurtenances

NSF INTERNATIONAL (NSF)

NSF Std 14	(1965; Rev Nov 1990) Plastics Piping System Components and Related Materials

1.2 PIPING

This section covers water service lines, and connections to building service at a point approximately 5 feet outside the buildings to which service is required. The Contractor shall have a copy of the manufacturer's recommendations for each material or procedure to be utilized available at the construction site at all times.

1.2.1 Service Lines

Piping for water service lines for sizes 3 inches and larger shall be ductile iron.

1.2.2 Excavation, Trenching, and Backfilling

Excavation, trenching, and backfilling shall be in accordance with the applicable provisions of Section 02222 EXCAVATION, TRENCHING, AND BACKFILLING FOR UTILITIES SYSTEMS, except as modified herein.

1.3 SUBMITTALS

Government approval is required for submittals with a "GA" designation; submittals having an "FIO" designation are for information only. The following shall be submitted in accordance with Section 01330 "SUBMITTAL PROCEDURES":

SD-06 Instructions

Installation; FIO

The manufacturer's recommendations for each material or procedure to be utilized.

SD-08 Statements

Waste Water Disposal Method; FIO.

The method proposed for disposal of waste water from hydrostatic tests and disinfection, prior to performing hydrostatic tests.

Satisfactory Installation; FIO

A statement signed by the principal officer of the contracting firm stating that the installation is satisfactory and in accordance with the contract drawings and specifications and the manufacturer's prescribed procedures and techniques, upon completion of the project and before final acceptance.

SD-09 Reports

Bacteriological Disinfection; FIO

Provide test results from commercial laboratory verifying disinfection.

SD-13 Certificates

Manufacturer's Representative; GA

Provide the name and qualifications of the manufacturer's representative and written certification from the manufacturer that the representative is technically qualified in all phases of ductile iron pipe. Use qualified and experienced field installers, prior to commencing installation.

1.4 HANDLING

Pipe and accessories shall be handled so as to insure delivery to the trench in sound, undamaged condition. Particular care shall be taken not to injure the pipe coating or lining. If the coating or lining of any pipe or fitting is damaged, the repair shall be made by the Contractor at his expense in a satisfactory manner. No other pipe or material of any kind shall be placed inside a pipe or fitting after the coating has been applied. Pipe shall be carried into position and not dragged. Use of pinch bars and tongs for aligning or turning pipe will be permitted only on the bare ends of the pipe. The interior of pipe and accessories shall be thoroughly cleaned of foreign matter before being lowered into the trench and shall be kept clean during laying operations by plugging or other approved method. Before installation, the pipe shall be inspected for defects. Material found to be defective before or after laying shall be replaced with sound material without additional expense to the Government. Rubber gaskets that are not to be installed immediately shall be stored in a cool and dark place.

2 PRODUCTS

2.1 PIPE

Pipe shall conform to the respective specifications and other requirements specified below.

2.1.1 Ductile-Iron Pipe

Ductile-iron pipe shall conform to AWWA C151, working pressure not less than 150 psi, unless otherwise shown or specified. Pipe shall be cement-mortar lined in accordance with AWWA C104. Linings shall be standard.

2.2 FITTINGS AND SPECIALS

2.2.1 Ductile-Iron Pipe

Fittings and specials shall be suitable for 150 psi pressure rating, unless otherwise specified. Fittings and specials for mechanical joint pipe shall conform to AWWA C110. Fittings and specials for use with push-on joint pipe shall conform to AWWA C110 and AWWA C111. Fittings and specials shall be cement-mortar lined (standard thickness) in accordance with AWWA C104. Ductile iron compact fittings shall conform to AWWA C153.

3 JOINTS

3.1.1 Ductile-Iron Pipe

a. Mechanical joints shall be of the stuffing box type and shall conform to AWWA C111

b. Push-on joints shall conform to AWWA C111.

c. Rubber gaskets and lubricant shall conform to the applicable requirements of AWWA C111.

3.2 VALVES

3.2.1 Gate Valves

Gate valves shall be designed for a working pressure of not less than 150 psi. Valve connections shall be as required for the piping in which they are installed. Valves shall have a clear waterway equal to the full nominal diameter of the valve, and shall be opened by turning counterclockwise. The operating nut or wheel shall have an arrow, cast in the metal, indicating the direction of opening.

a. Resilient-Seated Gate Valves: For valves 3 to 12 inches in size, resilient-seated gate valves shall conform to AWWA C509.

3.3 #.1 INDICATOR POST FOR VALVES

Indicator post shall conform to the requirements of NFPA 24. Operation shall be by a wrench which will be attached to each post.

3.4 VALVE BOXES

Valve boxes shall be cast iron or concrete, except that concrete boxes may be installed only in locations not subjected to vehicular traffic. Cast-iron boxes shall be extension type with slide-type adjustment and with flared base. The minimum thickness of metal shall be 3/16 inch. Concrete boxes shall be the standard product of a manufacturer of precast concrete equipment. The word "WATER" shall be cast in the cover. The box length

shall adapt, without full extension, to the depth of cover required over the pipe at the valve location.

3.5 #.1 DISINFECTION

Chlorinating materials shall conform to the following:
Chlorine, Liquid: AWWA B301.
Hypochlorite, Calcium and Sodium: AWWA B300.

3.6 MISCELLANEOUS ITEMS

3.7 #.1 FIRE HYDRANTS

Hydrants shall be dry-barrel type conforming to AWWA C502 with valve openings at least 5 inches in diameter and designed so that the flange at the main valve seat can be removed with the main valve seat apparatus remaining intact, closed and reasonably tight against leakage and with a breakable valve rod coupling and breakable flange connections located no more than 8 inches above the ground grade. Hydrants shall have a 6 inch bell connection, two 2-1/2 inch hose connections and one 5 inch STORTZ adaptor for the pumper connection. Outlets shall have American National Standard fire-hose coupling threads. Working parts shall be bronze. Design material and workmanship shall be similar and equal to the latest stock pattern ordinarily produced by the manufacturer. Hydrants shall be painted with one coat of red iron oxide, zinc oxide, zinc oxide primer conforming to SSPC Paint 25 and two finish coats of silicone alkyd paint conforming to SSPC Paint 21, of the color directed. Suitable bronze adapter for the 4-1/2 inch each outlet, with caps, shall be furnished.

3.7.1 Tapping Sleeves

Tapping sleeves of the sizes indicated for connection to existing lines shall be the cast gray, ductile, or malleable-iron, split-sleeve type with flanged or grooved outlet, and with bolts, follower rings and gaskets on each end of the sleeve. Construction shall be suitable for a maximum working pressure of 150 psi. Bolts shall have square heads and hexagonal nuts. Longitudinal gaskets and mechanical joints with gaskets shall be as recommended by the manufacturer of the sleeve.

3.7.2 Disinfection

Chlorinating materials shall conform to the following:

Chlorine, Liquid: AWWA B301.

Hypochlorite, Calcium and Sodium: AWWA B300.

4 EXECUTION

4.1 INSTALLATION

4.1.1 Cutting of Pipe

Cutting of pipe shall be done in a neat and workmanlike manner without damage to the pipe. Unless otherwise recommended by the manufacturer and authorized by the Contracting Officer, cutting shall be done with an approved type mechanical cutter. Wheel cutter shall be used when

practicable. Copper tubing shall be cut square and all burrs shall be removed. Squeeze type mechanical cutters shall not be used for ductile iron.

4.1.2 Adjacent Facilities

The water service line should be installed after both sanitary and storm lines are installed so as to adjust the pressure line, if required, to meet spacing requirements with gravity sewer lines. Consult with the Contracting Officer prior to this installation approach.

4.1.2.1 Sewer Lines

Where the location of the water pipe is not clearly defined in dimensions on the drawings, the water pipe shall not be laid closer horizontally than 10 feet from a sewer except where the bottom of the water pipe will be at least 12 inches above the top of the sewer pipe, in which case the water pipe shall not be laid closer horizontally than 6 feet from the sewer. Where water lines cross under gravity-flow sewer lines, the sewer pipe for a distance of at least 10 feet each side of the crossing shall be fully encased in concrete or shall be made of pressure pipe with no joint located within 3 feet horizontally of the crossing. Water lines shall in all cases cross above sewage force mains or inverted siphons and shall be not less than 2 feet above the sewer main. Joints in the sewer main, closer horizontally than 3 feet to the crossing, shall be encased in concrete.

4.1.2.2 Water Lines

Water lines shall not be laid in the same trench with sewer lines, gas lines, fuel lines, or electric wiring.

4.1.3 Joint Deflection

4.1.3.1 Ductile-Iron Pipe

The maximum allowable deflection shall be as given in AWWA C600. If the alignment requires deflection in excess of the above limitations, special bends or a sufficient number of shorter lengths of pipe shall be furnished to provide angular deflections within the limit set forth.

4.1.4 Placing and Laying

Pipe and accessories shall be preassembled above ground whenever possible to avoid fines from penetrating and wedging rubber gaskets. Carefully lower pipe into the trench by means of derrick, ropes, belt slings, or other authorized equipment. Under no circumstances shall any of the water-line materials be dropped or dumped into the trench. Care shall be taken to avoid abrasion of the pipe coating. Except where authorized by the Contracting Officer, pipe shall be laid with the bells facing in the direction of laying. The full length of each section of pipe shall rest solidly upon the pipe bed, with recesses excavated to accommodate bells, couplings, and joints. Pipe that has the grade or joint disturbed after laying shall be taken up and relaid. Pipe shall not be laid in water or when trench conditions are unsuitable for the work. Water shall be kept out of the trench until joints are complete. When work is not in progress, open ends of pipe, fittings, and valves shall be securely closed so that no trench water, earth, or other substance will enter the pipes or fittings.

Where any part of the coating or lining is damaged, the repair shall be made by the Contractor at his expense in a satisfactory manner. Install polyethylene in accordance to manufacturer's recommendations.

4.1.4.1 Connections

Where connections are made between new work and existing lines, the connections shall be made by using specials and fittings to suit the actual conditions. When made under pressure, these connections shall be installed using standard methods as approved by the Contracting Officer. Connections to existing asbestos-cement pipe shall be made in accordance with ACPPA 01. Contractor shall follow health and safety requirements in the applicable portions of the 1991 Code of Federal Regulations (CFR), Part 1926 and 1910.

4.1.5 Jointing

Pipe 4 inch through 12 inch diameter: Joints shall be elastomeric-gasket as specified in AWWA C900.

4.1.5.1 Ductile-Iron Pipe

Mechanical and push-on type joints shall be installed in accordance with AWWA C600 for buried lines or AWWA C606.

4.1.5.2 Connections

Connections between different types of pipe and accessories shall be made with transition fittings approved by the Contracting Officer.

4.1.6 Service Lines

Service lines shall include the pipeline connecting building piping to water distribution lines to the connections with the building service at a point approximately 5 feet outside the building where such building service exists. Where building services are not installed, the Contractor shall terminate the service lines approximately 5 feet from the site of the proposed building at a point designated by the Contracting Officer. Such service lines shall be closed with plugs or caps. Valves shall be provided with service boxes. Service lines shall be constructed in accordance with the following requirements:

4.1.6.1 Service Lines Larger than 2 Inches

Service lines larger than 2 inches shall be connected to the main by a tapped saddle or tapping sleeve and valve, depending on the main diameter and the service line diameter, and shall have a gate valve. Lines 3 inches and larger shall use gate valves.

4.1.7 Setting of Valves and Valve Boxes

4.1.7.1 Valves

After delivery, valves shall be drained to prevent freezing and shall have the interiors cleaned of all foreign matter before installation. Stuffing boxes shall be tightened, valves shall be fully opened and fully closed to ensure that all parts are in working condition. Valves and valve boxes shall be installed where shown or specified, and shall be set plumb. Valve

boxes shall be centered on the valves. Boxes shall be installed over each outside gate valve unless otherwise shown. Where feasible, valves shall be located outside the area of roads and streets. Earth fill shall be carefully tamped around each valve box to a distance of 4 feet on all sides of the box.

4.1.8 Thrust Restraint

Provide thrusting blocks for temporary plugs or caps and bends deflecting 11-1/4 degrees or more, either vertically or horizontally, on waterlines 4 inches in diameter or larger. Valves shall be securely anchored or shall be provided with thrust restraints to prevent movement. Thrust restraints for elbows and tapping sleeve shall be by thrust blocks.

4.1.8.1 Thrust Blocks

Thrust blocking shall be concrete of a mix not leaner than: 1 cement, 2-1/2 sand, 5 gravel; and having a compressive strength of not less than 2,000 psi after 28 days. Blocking shall be placed between solid ground and the fitting to be anchored. Unless otherwise indicated or directed, the base and thrust bearing sides of thrust blocks shall be poured directly against undisturbed earth. The sides of thrust blocks not subject to thrust may be poured against forms. The area of bearing shall be as shown on plans. Blocking shall be placed so that the fitting joints will be accessible for repair. Steel rods and clamps, protected by galvanizing or by coating with bituminous paint, shall be used to anchor vertical down bends into gravity thrust blocks.

4.2 HYDROSTATIC TESTS

Where any section of a water line is provided with concrete thrust blocking for fittings, the hydrostatic tests shall not be made until at least 5 days after installation of the concrete thrust blocking, unless otherwise approved.

4.2.1 Pressure Test

After the pipe is laid, the joints completed, and the trench partially backfilled leaving the joints exposed for examination, the newly laid piping or any valved section of piping shall, unless otherwise specified, be subjected for 2 hours to a hydrostatic pressure test of 200 psi. Water supply lines designated on the drawings to be installed shall be subjected for 2 hours to a hydrostatic pressure test of 200 psi. Each valve shall be opened and closed several times during the test. Exposed pipe, joints, fittings, and valves shall be carefully examined during the partially open trench test. Joints showing visible leakage shall be replaced or remade as necessary. Cracked or defective pipe, joints, fittings, and valves, discovered in consequence of this pressure test shall be removed and replaced with sound material, and the test shall be repeated until the test results are satisfactory. The requirement for the joints to remain exposed for the hydrostatic tests may be waived by the Contracting Officer when one or more of the following conditions is encountered:

a. Wet or unstable soil conditions in the trench.

b. Maintaining the trench in an open condition would delay completion of the contract.

The Contractor may request a waiver, setting forth in writing the reasons for the request and stating the alternative procedure proposed to comply with the required hydrostatic tests. Backfill placed prior to the tests shall be placed in accordance with the requirements of Section 02222EXCAVATION, TRENCHING, AND BACKFILLING FOR UTILITIES SYSTEMS.

4.2.2 Leakage Test

Leakage test shall be conducted after the pressure tests have been satisfactorily completed. The duration of each leakage test shall be at least 2 hours, and during the test the water line shall be subjected to not less than 200 psi pressure. Water supply lines designated on the drawings shall be subjected to a pressure equal to 200 psi. Leakage is defined as the quantity of water to be supplied into the newly laid pipe, or any valved or approved section thereof, necessary to maintain pressure within 5 psi of the specified leakage test pressure after the pipe has been filled with water and the air expelled. No piping installation will be accepted if leakage exceeds the allowable leakage which is determined by the following formula:

L = 0.0001351ND (P raised to 1/2 power)

L = Allowable leakage in gallons per hour
N = Number of joints in the length of pipeline tested
D = Nominal diameter of the pipe in inches
P = Average test pressure during the leakage test, in psi gauge

Should any test of pipe disclose leakage greater than that calculated by the above formula, the defective joints shall be located and repaired until the leakage is within the specified allowance, without additional cost to the Government.

4.2.3 Time for Making Test

Except for joint material setting or where concrete thrust blocks necessitate a 5-day delay, pipelines jointed with rubber gaskets, mechanical or push-on joints, or couplings may be subjected to hydrostatic pressure, inspected, and tested for leakage at any time after partial completion of backfill. Cement-mortar lined pipe may be filled with water as recommended by the manufacturer before being subjected to the pressure test and subsequent leakage test.

4.2.4 Concurrent Hydrostatic Tests

The Contractor may elect to conduct the hydrostatic tests using either or both of the following procedures. Regardless of the sequence of tests employed, the results of pressure tests, leakage tests, and disinfection shall be satisfactory as specified. All replacement, repair or retesting required shall be accomplished by the Contractor at no additional cost to the Government.

a. Pressure test and leakage test may be conducted concurrently.

b. Hydrostatic tests and disinfection may be conducted concurrently, using the water treated for disinfection to accomplish the hydrostatic tests. If water is lost when treated for disinfection

and air is admitted to the unit being tested, or if any repair procedure results in contamination of the unit, disinfection shall be re accomplished.

4.3 DISINFECTION

4.3.1.1 Bacteriological Disinfection

Before acceptance of potable water operation, each unit of completed waterline shall be disinfected as specified herein. After pressure tests have been made, the unit to be disinfected shall be thoroughly flushed with water until all entrained dirt and mud have been removed before introducing the chlorinating material. The chlorinating material shall be either liquid chlorine, calcium hypochlorite, or sodium hypochlorite, conforming to paragraph MISCELLANEOUS ITEMS. The chlorinating material shall provide a dosage of not less than 50 ppm and shall be introduced into the water lines in an approved manner. Polyvinyl Chloride (PVC) pipe lines shall be chlorinated using only the above specified chlorinating material in solution. In no case will the agent be introduced into the line in a dry solid state. The treated water shall be retained in the pipe long enough to destroy all non-spore-forming bacteria. Except where a shorter period is approved, the retention time shall be at least 24 hours and shall produce not less than 25 ppm of free chlorine residual throughout the line at the end of the retention period. All valves on the lines being disinfected shall be opened and closed several times during the contact period. The line shall then be flushed with clean water until the residual chlorine is reduced to less than 1.0 ppm. From several points in the unit, the Contracting Officer will take samples of water in proper sterilized containers for bacterial examination. The disinfection shall be repeated until tests indicate the absence of pollution for at least 2 full days. The unit will not be accepted until satisfactory bacteriological results have been obtained.

4.4 CLEANUP

Upon completion of the installation of water lines, and appurtenances, all debris and surplus materials resulting from the work shall be removed.

SECTION 02698

PREFABRICATED UNDERGROUND COOLING DISTRIBUTION SYSTEM

1 GENERAL

1.1 REFERENCES

The publications listed below form a part of this specification to the extent referenced. The publications are referred to in the text by basic designation only.

AMERICAN SOCIETY FOR TESTING AND MATERIALS (ASTM)

ASTM A 53	(1993) Pipe, Steel, Black and Hot-Dipped, Zinc-Coated Welded and Seamless
ASTM A 105	(1993) Forgings, Carbon Steel, for Piping Components
ASTM A 106	(1993) Seamless Carbon Steel Pipe for High-Temperature Service
ASTM A 234	(1992a) Piping Fittings of Wrought Carbon Steel and Alloy Steel for Moderate and Elevated Temperatures
ASTM B 88	(1993a) Seamless Copper Water Tube
ASTM C 518	(1991) Steady-State Heat Flux Measurements and Thermal Transmission Properties by Means of the Heat Flow Meter Apparatus
ASTM C 591	(1985) Unfaced Preformed Rigid Cellular Polyurethane Thermal Insulation
ASTM D 1248	(1984; R 1989) Polyethylene Plastics Molding and Extrusion Materials
ASTM D 1784	(1992) Rigid Poly(Vinyl Chloride) (PVC) Compounds and Chlorinated Poly(Vinyl Chloride) (CPVC) Compounds
ASTM D 2241	(1993) Poly(Vinyl Chloride) (PVC) Pressure-Rated Pipe (SDR Series)
ASTM D 2564	(1993) Solvent Cements for Poly(Vinyl Chloride) (PVC) Plastic Piping Systems
ASTM D 3139	(1989) Joints for Plastic Pressure Pipes Using Flexible Elastomeric Seals
ASTM F 477	(1993) Elastomeric Seals (Gaskets) for Joining Plastic Pipe

AMERICAN SOCIETY OF MECHANICAL ENGINEERS (ASME)

ASME B1.20.1	(1983; R 1992) Pipe Threads, General Purpose (Inch)
ASME B16.9	(1993) Factory-Made Wrought Steel Buttwelding Fittings
ASME B16.11	(1991) Forged Fittings, Socket-Welding and Threaded
ASME B31.1	(1992; B31.1a; B31.1b) Power Piping
ASME BPV IX	(1992; Addenda Dec 1992, Dec 1993) Boiler and Pressure Vessel Code; Section IX, Welding and Brazing Qualifications

COPPER DEVELOPMENT ASSOCIATION (CDA)

CDA 404/0-RR	(1992) Copper Tube for Plumbing, Heating, Air Conditioning and Refrigeration

MANUFACTURERS STANDARDIZATION SOCIETY OF THE VALVE AND FITTINGS INDUSTRY (MSS)

MSS SP-73	(1991) Brazing Joints for Copper and Copper Alloy Pressure Fittings

MILITARY SPECIFICATIONS (MS)

MS MIL-P-28584	(Rev B) Pipe and Pipe Fittings, Glass Fiber Reinforced Plastic, Adhesive Bonded Joint Type, for Condensate Return Lines

1.2 SYSTEM DESCRIPTION

The system consists of a buried prefabricated chilled water distribution system including service connections to a point 6 inches inside of the building. The contract drawings show the specific arrangement of piping, sizes and grades of pipe, and other details. The system is designed for an operating pressure of 50 psig and an operating temperature of 45 degrees F for chilled water.

1.3 SUBMITTALS

Government approval is required for submittals with a "GA" designation; submittals having an "FIO" designation are for information only. The following shall be submitted in accordance with Section 01330SUBMITTAL PROCEDURES:

SD-01 Data

Distribution System; GA.

Data composed of catalog cuts, brochures, circulars, specifications and product data, and printed information in sufficient detail and scope to verify compliance with the requirements of the contract documents.

SD-04 Drawings

Distribution System; GA.

Detail drawings consisting of fabrication and assembly drawings, for all parts of the work in sufficient detail to check conformity with the requirements of the contract documents, prior to installation. Detail drawings shall also contain complete piping, wiring and schematic diagrams and any other details to demonstrate that the system has been coordinated and will properly function as a unit. Drawings shall show proposed layout, method of compensation for pipe expansion and contraction, anchorage of equipment and appurtenances, and equipment relationship to other parts of the work including clearances required for maintenance and operation. The drawings shall clearly identify any proposed deviations from the requirements of the contract documents.

SD-13 Certificates

Distribution System; FIO.

The manufacturer's or system fabricator's written certification stating that the distribution system furnished meets all the requirements of this specification.

Welding Procedures and Operators; FIO.

Prior to welding operations, a copy of qualified procedures and a list of names and identification symbols of qualified welders and welding operators.

SD-19 Operation and Maintenance Manuals

Distribution System; GA.

Six copies of operation and six copies of maintenance manuals for the equipment furnished, one complete set prior to performance testing and the remainder upon acceptance. Operation manuals shall detail the step-by-step procedures required for equipment startup, operation, and shutdown. Operation manuals shall include the manufacturer's name, model number, parts list, and brief description of all equipment and their basic operating features. Maintenance manuals shall list routine maintenance procedures, possible breakdowns and repairs, and troubleshooting guides. Maintenance manuals shall include piping and equipment layout and simplified wiring and control diagrams of the equipment system as installed. Manuals shall be approved prior to the field performance testing.

1.4 DELIVERY AND STORAGE

After delivery to the jobsite, all materials and equipment shall be protected from anything which could cause damage to the material or equipment. All pipe shall be sealed at each end to keep the interior clean and free of dirt and debris. Fittings shall be kept together and their interior surfaces shall remain clean. Any insulation shall be kept dry and clean.

1.5 FIELD MEASUREMENTS

The Contractor shall become familiar with all details of the work, verify all dimensions in the field and shall advise the Contracting Officer of any discrepancy before performing the work.

1.6 WELDING

Piping shall be welded in accordance with qualified procedures using performance qualified welders and welding operators. Procedures and welders shall be qualified in accordance with ASME BPV IX. Welding procedures qualified by others, and welders and welding operators qualified by another employer may be accepted as permitted by ASME B31.1. The Contracting Officer shall be notified 24 hours in advance of tests and the tests shall be performed at the work site if practicable. The welder or welding operator shall apply his assigned symbol near each weld he makes as a permanent record. Structural members shall be welded in accordance with Section 05055 WELDING, STRUCTURAL.

2 PRODUCTS

2.1 STANDARD PRODUCTS

System components shall be standard products of a manufacturer regularly engaged in the manufacture of the product and shall essentially duplicate items that have been in satisfactory use for at least 2 years prior to bid opening. The system shall be supported by a service organization that is, in the opinion of the Contracting Officer, reasonably convenient to the site.

2.2 PIPING AND CASING MATERIALS

2.2.1 General

Metallic pressure pipe, fittings, and piping accessories shall conform to the requirements of ASME B31.1 and shall be types suitable for the temperature and pressure of the water.

2.2.2 Piping

2.2.2.1 Steel Pipe

Piping shall conform to ASTM A 53, Grade B, standard weight, black or to ASTM A 106, Grade B, standard weight.

2.2.2.2 Copper Tubing

Copper tubing shall conform to ASTM B 88, Type K or L.

2.2.2.3 Reinforced Thermosetting Resin Pipe (RTRP)

RTRP pipe shall conform to MS MIL-P-28584.

2.2.2.4 Polyvinyl Chloride (PVC) Pipe

PVC pipe shall conform to ASTM D 2241 with a Standard Thermoplastic Pipe Dimension Ratio (SDR) of 26 and PVC 1120 or 1220 as the material.

2.2.3 Casings

2.2.3.1 Polyvinyl Chloride (PVC) Casing

PVC casings shall conform to ASTM D 1784, Class 12454-B with a minimum thickness equal to the greater of one-hundredth the diameter of the casing or 60 mils.

2.2.3.2 Polyethylene (PE) Casing

Polyethylene casings shall conform to ASTM D 1248, Type III, Class C, Category 3 or 4, Grade P 34 with thickness as follows:

Casing Diameter (in inches)	Minimum Thickness (in mils)
10 and smaller	125
10 to 18	150
18 through 24	200
over 24	225

2.2.3.3 Reinforced Thermosetting Resin Pipe (RTRP) Casing

RTRP casing shall be of the same material as designated for the pipe with casing thickness as follows:

Casing Diameter (in inches)	Minimum Thickness (in mils)
8 and smaller	70
10	80
12	105
14	115
16 to 18	120
20	125
24	155

2.3 PIPING CONNECTIONS

2.3.1 Steel Pipe

Steel pipe smaller than 3/4-inch may be threaded, otherwise, all steel pipe shall be welded. Steel welding fittings shall conform to the requirements of ASTM A 105 or ASTM A 234. Welding fittings shall also conform to ASME B16.9 for buttweld fittings and ASME B16.11for socket-weld fittings. Long radius buttwelding elbows conforming to ASME B16.9 shall be used whenever space permits. Pipe Threads shall conform to ASME B1.20.1. Pipe to be threaded shall be schedule 80.

2.3.2 Copper Pipe

Copper pipe shall be brazed or connected using an insulated pipe coupling. Wrought copper or cast copper alloy solder joint pressure fittings shall

conform to MSS SP-73. Insulated pipe couplings for copper pipe shall be cast bronze containing an O-ring seal on each end and shall be jacketed and sealed to act as an expansion joint.

2.3.3 Plastic Pipe

2.3.3.1 General

Plastic fittings shall be made of the same type and grade of material as the piping to which they will be connected and shall be furnished by the manufacturer who supplies the pipe. Fittings shall have temperature and pressure ratings not less than those of the connecting piping.

2.3.3.2 Polyvinyl Chloride (PVC)

Polyvinyl chloride (PVC) pipe shall be solvent welded or connected using bell and spigot connections. The solvent used to connect fittings and pipe shall conform to the requirements of ASTM D 2564. Bell and spigot joints utilizing elastomeric seals shall conform to the requirements of ASTM D 3139. The elastomeric seals shall conform to ASTM F 477.

2.3.3.3 Reinforced Thermosetting Resin Plastic (RTRP)

Reinforced thermosetting resin plastic pipe shall be joined using fittings and adhesive furnished by the pipe manufacturer in accordance with MS MIL-P-28584.

2.4 END SEALS

2.4.1 General

Each preinsulated section of piping shall have a complete sealing of the insulation to provide a permanent water and vapor seal at each end of the preinsulated section of piping. Preinsulated sections of piping modified in the field shall be provided with an end seal which is equivalent to the end seals furnished with the preinsulated section of piping. End seals must be tested and certified in accordance with paragraph Casing and End Seal Testing and Certification.

2.4.2 Types

End seals provided shall be one of the following types:

a. Carrying the outer casing over tapered pipe insulation ends and extending it to the carrier pipe. Sufficient surface bonding area shall be provided between the casing and the carrier pipe.

b. Using specially designed molded caps made of polyethylene or rubber of standard manufactured thickness. A minimum 1-1/2 inchsurface bonding area shall be provided between the cap and both the casing and carrier pipe.

c. Using elastomer-ring end seals designed and dimensioned to fit in the annular space between the casing and the carrier pipe.

d. Using a waterproof mastic seal vapor barrier over the exposed insulation ends.

e. Shrink sleeves.

2.4.3 Casing and End Seal Testing and Certification

Testing and certification procedures by an independent testing laboratory shall demonstrate that casings and end seals are capable of resisting penetration of water into the casing and insulation. The test shall be performed on the type of prefabricated system to be furnished. If more than one type of prefabricated system is to be used, then the tests shall be performed on each type. The test shall consist of hot and cold cycle testing followed by immersion in a water filled chamber with a head pressure. The hot and cold cycle testing shall consist of 14 days of temperature cycling. A fluid with a temperature of 40 degrees F shall circulate through the carrier pipe alternating every 24-hours with a fluid with a temperature of 75 degrees F for a chilled water service. While the hot and cold cycle test is being performed, the test sample is either buried or encased in dry bedding sand with a minimum of 12 inches of sand all around the test sample. The carrier pipe size of the test sample shall be 3 inches in diameter and shall be restrained during the test period. The insulation thickness shall not exceed the maximum thickness provided for the piping in the project. Transition time for temperature cycle testing shall not exceed 15 minutes in going from cold to hot and 30 minutes in going from hot to cold. The fluid in the carrier pipe may be water, oil or heat transfer fluid. Following the hot and cold cycling test, the test sample shall be immersed in a water filled chamber. The pressure on the highest point of the test sample shall not be less than 20 feet of water head pressure subjected over the entire length of the 8 foot test sample of prefabricated pipe. The water shall contain a dye penetrant, which will be used to check for end seal leakage. The pressure in the chamber must be held for not less than 48 hours. Upon completion of this pressure test, the test sample shall be cut open. With the use of a light that will readily show the presence of the dye that was in the water, the test sample shall be inspected. Evidence of the dye inside the test sample shall indicate that the end seal is not acceptable and cannot be certified. A pipe manufacturer who has a current Federal Letter of Acceptability for a system furnished under this section will be exempt from the testing specified in this paragraph.

2.5 INSULATION

2.5.1 Factory Applied Insulation

Prefabricated pipe and fittings shall be insulated in the factory. Foam insulation for prefabricated insulated pipe and fittings shall be polyurethane foam meeting the requirements of ASTM C 591 having a density not less than 2 pounds per cubic foot (pcf). The polyurethane foam shall completely fill the annular space between the carrier pipe and the casing. Insulation thickness shall be a minimum of 0.9 inches.The insulation thermal conductivity factor shall not exceed the numerical value of 0.15 Btu-inch/square foot-degree F-hour at 75 degrees F,when tested in accordance with ASTM C 518. Manufacturer shall certify that the insulated pipe is free of insulation voids.

2.5.2 Field Applied Insulation

Field applied insulation for fittings, and field casing closures, if required, and other piping system accessories shall be polyurethane matching the pipe insulation. Thickness shall match adjacent piping insulation thickness. Buried fittings and accessories shall have field applied polyurethane insulation to match adjacent piping and shall be protected with a covering matching the pipe casing. Shrink sleeves with a minimum thickness of 50 mils shall be provided over casing connection joints.

3 EXECUTION

3.1 INSTALLATION

For all preinsulated, prefabricated systems, the Contractor shall obtain the services of a trained representative of the pipe system manufacturer to instruct the Contractor's work forces in the installation procedures to ensure that the system is installed in accordance with the manufacturer's PUBLISHED instructions and the plans and specifications. The manufacturer's representative shall be a person who regularly performs such duties for the manufacturer. The Contractor shall furnish the Contracting Officer a list of names of personnel trained and certified by the pipe system manufacturer in the installation of this system. Only personnel whose names appear on the list will be allowed to install the system. The list shall not be more than 1 year old.

3.2 PIPING SYSTEMS

3.2.1 Buried Insulated Systems

Buried insulated systems shall consist of carrier pipe, insulation, casing, end seals, fittings and accessories as specified.

3.3 THRUST BLOCKS

Thrust blocks shall be installed at locations recommended by the pipe system manufacturer. Thrust blocks may not be required on all systems, and the need for thrust blocks shall be as recommended by the system manufacturer. Thrust blocks, if necessary, shall be installed at all changes in direction, changes in size, valves and terminal ends, such as plugs, caps and tees. Thrust blocks shall be concrete having a compressive strength of not less than 2000 psi after 28 days and shall be in accordance with Section 03300 CONCRETE FOR BUILDING CONSTRUCTION. Thrust blocks shall be placed between solid ground and the fitting to be anchored. Unless otherwise indicated or directed, the base and the thrust bearing sides of the thrust blocks shall be poured directly against undisturbed earth. The sides of the thrust blocks not subject to thrust may be poured against forms. Thrust blocks shall be placed so that the joints for all fittings will be accessible for repair wherever possible. No pipe joint shall be embedded in concrete unless the assembly has previously been hydrostatically tested. The thrust blocks shall provide for transfer of thrusts and reactions without exceeding the allowable stress of the concrete and shall be installed in accordance with pipe manufacturer's instructions. In muck or peat, all thrusts shall be resisted by piles or tie rods to solid foundations or by removal of peat or muck which shall be replaced with ballast of sufficient stability to resist thrusts.

3.4 INSTALLATION OF PIPING SYSTEMS

The piping system furnished shall be installed in accordance with the piping system manufacturer's instructions. Piping shall be installed without springing or forcing other than what has been calculated for cold spring. Pipe ends shall have burrs removed by reaming and shall be installed to permit free expansion and contraction without damage to joints or hangers. Nonmetallic pipe cut in the field shall be machined to fit couplings or joints and shall be coated or treated to match standard factory coated ends. Copper tubing shall not be installed in the same trench with ferrous piping materials. When nonferrous metallic pipe (e.g., copper tubing) crosses any ferrous piping material, a minimum vertical separation of 12 inches shall be maintained between pipes. Connections between different types of pipe and accessories shall be made with transition fittings approved by the manufacturer of the piping system.

3.4.1 Pitching of Horizontal Piping

Horizontal piping shall be pitched at a grade of not less than 1 inch in 20 feet toward the drain points unless otherwise indicated.

3.4.2 Open Ends

Open ends of pipelines and equipment shall be properly capped or plugged during installation to keep dirt and other foreign matter out of the system.

3.4.3 Cutting Prefabricated Piping Sections

Where prefabricated pipe sections are field cut, new end seals similar to the factory applied end seal shall be provided and installed in accordance with the manufacturer's instructions.

3.4.4 Joints

3.4.4.1 Welded Joints

Welded joints between sections of pipe and between pipe and fittings shall be provided where specified or indicated.

3.4.4.2 Threaded Joints

Threaded joints shall not be used belowground. Joints shall be made tight with polytetrafluoroethylene tape applied to the male threads only. Not more than three threads shall show after the joint is made up.

3.4.4.3 Brazed Joints

Brazed joints for copper pipe and fittings shall conform to CDA 404/0-RR. Brazing alloys melting above 1100 degrees F shall be utilized.

3.4.4.4 Nonmetallic Pipe Joints

Nonmetallic pipe joints shall be installed in accordance with the written instructions of the manufacturer.

3.4.5 Anchors

Anchor design shall be in accordance with the published data of the manufacturer and for prefabricated systems shall be factory fabricated by the prefabricated system manufacturer. In all cases, the design shall be such that water penetration, condensation, or vapor transmission will not wet the insulation.

3.4.6 Field Casing Closures

Field insulation and encasement of joints shall be accomplished after the visual and pressure tests specified are completed. Field insulation and encasement shall be in accordance with the manufacturer's written instructions. Thickness dimensions of the insulation and casing materials shall not be less than those of the adjoining prefabricated section. Insulating material shall be foamed in place polyurethane. Care should be taken to ensure that field closures are made under conditions of temperature and cleanliness required to produce a sound, continuous vapor barrier. A standard polyethylene heat shrink sleeve shall be installed over the casing and shall have a 6-inch minimum overlap at each end.

3.4.7 Underground Warning Tape

Underground warning tape shall be buried above the piping during the trench backfilling and shall be buried approximately 12 inches deep. Tape shall be 0.004-inch thick polyethylene tape for metallic pipe and polyethylene tape with metallic core for plastic pipe. Tape shall be 6 inches wide and be printed with repetitive caution warnings along its length. Tapes shall be yellow in color with black letters. Tape color and lettering shall not be affected by moisture or other substances contained in the backfill material.

3.4.8 Markers for Underground Piping

Markers for underground piping shall be so located along the distribution and service lines. Markers shall be placed as indicated approximately 2 feet to the right of the distribution system and referenced to the flow direction in the supply line. The marker shall be concrete 6-inchsquare or round section 2 feet long. The top edge of the marker shall have a minimum 1/2-inch chamfer all around. The letters CHW shall be impressed or cast on the top of the markers to indicate the type of system that is being identified. Each letter shall be formed with a V-shaped groove and shall have a width of stroke at least 1/4-inch at the top and depth of 1/4-inch. The top of the marker shall protrude not more than 1 inch above finished grade.

3.5 EARTHWORK

Earthwork shall be performed in accordance with Section 02222EXCAVATION, TRENCHING, AND BACKFILLING FOR UTILITIES SYSTEMS.

3.6 ELECTRICAL WORK

Electrical work shall be performed in accordance with either Section 16375 ELECTRICAL DISTRIBUTION SYSTEM, UNDERGROUND or Section 16370ELECTRICAL DISTRIBUTION SYSTEM, AERIAL.

3.7 TESTING

Tests shall be conducted before, during, and after installation of the system. All instruments, equipment, facilities, and labor required to properly conduct the tests shall be provided by the Contractor. Test pressure gauges for a specific test shall have dials indicating not less than 1-1/2 times nor more than 2 times the test pressure. It shall be the Contractor's responsibility to make the pipe system workable at his expense.

3.7.1 Metallic Pipe Welds

An approved independent testing firm or firms regularly engaged in radiographic testing shall perform a radiographic examination of the field welds. The radiographic testing shall be performed in accordance with ASME B31.1. All radiographs shall be reviewed and interpreted by a Certified Level III Radiographer employed by the testing firm. Any welds found to be unacceptable shall be removed, rewelded and radiographically reexamined in accordance with the above criteria. Such repair and reexamination shall be accomplished at no cost to the Government.

3.7.2 Carrier Piping Tests

Distribution piping shall be tested as required before backfilling and with all joints exposed. The area between joints may be backfilled as necessary to prevent pipe movement.

3.7.2.1 Cleaning Carrier Pipe

Prior to testing, the interior of the carrier pipe shall be cleaned of all foreign materials by thorough flushing with clean water. Supplementary pumps shall be provided to circulate the water at a velocity between 7 and 10 feet per second for a minimum of 4 hours. Any system strainers shall be cleaned after the flushing operation is complete. Temporary strainers shall be installed as required. After circulation, the water shall be drained out of the piping system and the piping system filled with treated water for permanent operation of the system. All air must be removed from the system prior to starting the tests.

3.7.2.2 Hydrostatic Pressure Cycling and Test

Hydrostatic pressure cycling will have four cycles. Each cycle shall consist of a 10 minute period at 150 psig followed by a 5 minute period at a pressure less than 50 psig. The next cycle will begin immediately following the completion of the previous cycle. Pressure rise and drop shall not exceed 100 psi per minute. The pressure gauge shall be located and the pressure measured at the opposite end of the system from where the pressure is applied. After completion of the hydrostatic pressure cycling the first hydrostatic pressure test may be performed. During the first hydrostatic pressure test the system shall be proven tight at a pressure of 1-1/2 times the working pressure up to 150 psig. This pressure shall be held for a minimum of 1 hour. The method of pressurizing the system shall be disconnected from the system before starting the 1 hour pressure holding period. If the pressure cannot be held for the specified length of time, the cause of pressure loss shall be determined, corrected and the hydrostatic pressure cycling and first hydrostatic pressure test repeated until the system can hold the required pressure for at least 1 hour.

3.7.2.3 Operational Test

Operational test shall be performed on the complete system or testable portions thereof. The test shall be conducted with full design flows and operating temperatures in all runs of piping as if in service, to demonstrate satisfactory function and operating effectiveness. The operational test will have two cycles. Each cycle shall consist of a 6-hour period with water in the system at the maximum operating temperature of 60 degrees F and maximum flow rate and a period of at least 6 hours with no flow rate. The Contractor shall supply temporary pumps, piping connections, boilers, chillers and the gauges required to circulate the water at the desired temperatures and flow rates. Water shall be circulated through supply lines and returned through the return piping to demonstrate that the pressure drop is compatible with the flow rate and size of pipe and to show that obstructions do not exist in the piping system. Any unusual indicated pressure drop will be investigated and any obstructions removed. Any leaks found shall be repaired. After any obstructions have been removed and any leaks repaired, the operational test shall be repeated.

3.7.2.4 Final Hydrostatic Test

After successful completion of the operational test, the system shall be pressurized to 1-1/2 times the working pressure up to 150 psig. This pressure shall be held for a minimum of 4 hours. The method of pressurizing the system shall be disconnected from the system prior to the start of the 4-hour pressure holding period. If the pressure cannot be held for the specified length of time, the cause of the pressure loss shall be determined, corrected, and all of the tests repeated.

SECTION 02720

STORM-DRAINAGE SYSTEM

1 GENERAL

1.1 REFERENCES

The publications listed below form a part of this specification to the extent referenced. The publications are referred to in the text by basic designation only.

AMERICAN ASSOCIATION OF STATE HIGHWAY AND TRANSPORTATION OFFICIALS (AASHTO)

AASHTO-01	(1992; interim specs 1993, 1994, 1995) Standard Specifications for Highway Bridges
AASHTO M 64	(1984) Ductile Iron Culvert Pipe
AASHTO M 86	(1987I) Concrete Sewer, Storm Drain, and Culvert Pipe
AASHTO M 91	(1978; Rev 1986) Sewer and Manhole Brick (Made from Clay or Shale)
AASHTO M 114	(1985) Building Brick (Solid Masonry Units Made from Clay or Shale)
AASHTO M 170	(1987I) Reinforced Concrete Culvert, Storm Drain, and Sewer Pipe
AASHTO M 198	(1994) Joints for Circular Concrete Sewer and Culvert Pipe Using Flexible Watertight Gaskets
AASHTO M 252	(1985) Corrugated Polyethylene Drainage Tubing
AASHTO M 294	(1986) Corrugated Polyethylene Pipe, 12 to 24-In. Diameter

AMERICAN SOCIETY FOR TESTING AND MATERIALS (ASTM)

ASTM A 48	(1992) Gray Iron Castings
ASTM A 536	(1984) Ductile Iron Castings
ASTM A 716	(1986) Ductile Iron Culvert Pipe
ASTM C 14	(1982) Concrete Sewer, Storm Drain, and Materials-Sponge or Expanded Rubber
ASTM C 32	(1993) Sewer and Manhole Brick (Made from Clay or Shale)

ASTM C 55	(1995) Concrete Building Brick
ASTM C 62	(1995) Building Brick (Solid Masonry Units Made from Clay or Shale)
ASTM C 76	(1995) Reinforced Concrete Culvert, Storm Drain, and Sewer Pipe
ASTM C 270	(1995) Mortar for Unit Masonry
ASTM C 425	(1995) Compression Joints for Vitrified Clay Pipe and Fittings
ASTM C 443	(1994) Joints for Circular Concrete Sewer and Culvert Pipe, Using Rubber Gaskets
ASTM C 877	(1994) External Sealing Bands for Noncircular Concrete Sewer, Storm Drain, and Culvert Pipe
ASTM D 1056	(1991) Flexible Cellular Materials - Sponge or Expanded Rubber
ASTM D 1171	(1994) Rubber Deterioration - Surface Ozone Cracking Outdoors or Chamber (Triangular Specimens)
ASTM D 1556	(1990) Density and Unit Weight of Soil in Place by the Sand-Cone Method
ASTM D 1557	(1991) Laboratory Compaction Characteristics of Soil Using Modified Effort (56,000 ft-lbf/cu. ft. (2,700 kN-m/cu. m.))
ASTM D 1784	(1992) Rigid Poly(Vinyl Chloride) (PVC) Compounds and Chlorinated Poly(Vinyl Chloride) (CPVC) Compounds
ASTM D 2167	(1994) Density and Unit Weight of Soil in Place by the Rubber Balloon Method
ASTM D 3034	(1994) Type PSM Poly(Vinyl Chloride) (PVC) Sewer Pipe and Fittings
ASTM D 3212	(1986) Joints for Drain and Sewer Plastic Pipes Using Flexible Elastomeric Seals
ASTM D 3350	(1993) Polyethylene Plastic Pipe and Fittings Materials
ASTM F 477	(1993) Elastomeric Seals (Gaskets) for Joining Plastic Pipe
ASTM F 679	(1994) Poly(Vinyl Chloride) (PVC) Large-Diameter Plastic Gravity Sewer Pipe and Fittings

ASTM F 714	(1990) Polyethylene (PE) Plastic Pipe (SDR-PR) Based on Outside Diameter

AMERICAN WATER WORKS ASSOCIATION

AWWA C 151	(1991) Ductile - Iron Pipe, Centrifugally Cast for Water or Other Liquids

FEDERAL SPECIFICATIONS (FS)

FS HH-G-156	(Rev. D; Int. Am. 1) Gasket Material, General Purpose; Rubber Sheets, Strips, and Special Shapes
FS SS-S-210	(Rev. A) Sealing Compound, Preformed Plastic, for Expansion Joints and Pipe Joints

FEDERAL STANDARD (FED-STD)

FED-STD 601	(Change Notices 1 thru 7) Rubber: Sampling and Testing

WASHINGTON STATE DEPARTMENT OF TRANSPORTATION

W.S.D.O.T.	(1994) Standard Plans and Specifications for Road, Bridge, and Municipal Construction

1.2 SUBMITTALS

The following shall be submitted in accordance with Section 01330 "SUBMITTAL PROCEDURES":

SD-75, Installation Procedures

Where installation procedures or any part thereof are required to be in accordance with the recommendations of the manufacturer of the material being installed, printed copies of these recommendations shall be furnished to the contracting officer prior to installation. Printed copies of the manufacturer's recommendations for installation procedures of the material being placed, prior to installation.

SD-13, Certificates of Compliance

Certified copies of test reports demonstrating conformance to applicable pipe specifications, shall be delivered to the Contracting Officer before pipe is installed. Certification on the ability of frame and cover or gratings to carry the imposed H-20 rated live load.

1.3 DELIVERY, STORAGE, AND HANDLING

1.3.1 Delivery and Storage

Materials delivered to site shall be inspected for damage, unloaded, and stored with a minimum of handling. Materials shall not be stored directly on the ground. The inside of pipes and fittings shall be kept free of dirt

and debris. Gasket materials and plastic materials shall be protected from exposure to the direct sunlight over extended periods.

1.3.2 Handling

Materials shall be handled in such a manner as to ensure delivery to the trench in sound, undamaged condition. Pipe shall be carried to the trench, not dragged.

2 PRODUCTS

2.1 PIPE FOR STORM DRAINS

Pipe for storm drains shall be of the sizes indicated and shall conform to the requirements for the following pertinent types:.

2.1.1 Reinforced Concrete Pipe

ASTM C 76 or AASHTO M 170, Class IV for pipe 12 inches in diameter or less, ASTM C 76 or AASHTO M 170, Class III for pipe greater than 12 inches in diameter.

2.2 #.1 NON-REINFORCED CONCRETE PIPE

ASTM C 14 or AASHTO M 86, Class 3.

2.2.1 Polyvinyl Chloride (PVC) Pipe

ASTM D 3034, Type PSM, SDR-35.

2.2.2 Corrugated Polyethylene (PE) Pipe

AASHTO M 252 or AASHTO M 294.

2.2.3 Ductile-Iron Pipe

AASHTO M 64 or ASTM A 716.

2.3 DRAINAGE STRUCTURES

"Type I catch basins" shall be Washington State Department of Transportation W.S.D.O.T. Standard Plan B-1, B-1a or B1b.

"Type II catch basins" shall be per W.S.D.O.T. Standard Plan B-1e.

2.4 MISCELLANEOUS MATERIALS

2.4.1 Concrete

Unless otherwise specified, concrete and reinforced concrete shall conform to the requirements under Section 03300 CONCRETE FOR BUILDING CONSTRUCTION.

2.4.2 Mortar

Mortar for pipe joints, connections to other drainage structures, and brick or block construction shall conform to ASTM C 270, Type M, except the maximum placement time shall be 1 hour. The quantity of water in the

mixture shall be sufficient to produce a stiff workable mortar. Water shall be clean and free of harmful acids, alkalies, and organic impurities. The mortar shall be used within 30 minutes after the ingredients are mixed with water. The inside of the joint shall be wiped clean and finished smooth. The mortar head on the outside shall be protected from air and sun with a proper covering until satisfactorily cured.

2.4.3 Brick

Brick shall conform to ASTM C 62 or AASHTO M 114, Grade SW; ASTM C 55, Grade S-I or S-II; or ASTM C 32 or AASHTO M 91, Grade MS. Mortar for jointing and plastering shall consist of one part portland cement and two parts fine sand. Lime may be added to the mortar in a quantity not more than 25 percent of the volume of cement. The joints shall be filled completely and shall be smooth and free from surplus mortar on the inside of the structure. Brick installed with structures shall be plastered with 1/2 inch of mortar over the entire outside surface of the walls. For square or rectangular structures, brick shall be laid in stretcher courses with a header course every sixth course. For round structures, brick shall be laid radially with every sixth course a stretcher course.

2.4.4 Frame and Cover for Gratings

Frame and cover for gratings shall be per Spokane County Standard Plan B-16 and be cast gray iron, ASTM A 48, Class 35B; cast ductile iron, ASTM A 536, Grade 65-45-12, unless otherwise specified. Weight, shape, size, and waterway openings for grates and curb inlets shall be as indicated on the plans. All utility frame and covers within newly constructed pavement areas shall be capable of supporting H-20 live loads. Covers shall be suitable for bicycle traffic.

2.4.5 Joints

2.5 #.1 CONCRETE PIPE

2.6 #.1 CEMENT-MORTAR BELL-AND-SPIGOT JOINT

The first pipe shall be bedded to the established gradeline, with the bell end placed upstream. The interior surface of the bell shall be carefully cleaned with a wet brush and the lower portion of the bell filled with mortar to such depth as to bring inner surfaces of abutting pipes flush and even. The spigot end of each subsequent pipe shall be cleaned with a wet brush and uniformly matched into a bell so that secions are closely fitted. After each section is laid, the remainder of the joint shall be filled with mortar, and a bead shall be formed around the outside of the joint with sufficient additional mortar. Cement mortar, finish, and protection of joints shall be as specified in paragraph "MATERIALS FOR DRAINAGE STRUCTURES." If mortar is not sufficiently stiff to prevent appreciable slump before setting, the outside of the joint shall be wrapped or bandaged with cheesecloth to hold mortar in place.

2.7 #.1 CEMENT-MORTAR OAKUM JOINT FOR BELL-AND-SPIGOT PIPE

A closely twisted gasket shall be made of jute or oakum of the diameter required to support the spigot end of the pipe at the proper grade and to make the joint concentric. Joint packing shall be in one piece of sufficient length to pass around the pipe and lap at top. This gasket shall

be thoroughly saturated with neat cement grout. The bell of the pipe shall be thoroughly cleaned with a wet brush, and the gasket shall be laid in the bell for the lower third of the circumference and covered with mortar. The spigot of the pipe shall be thoroughly cleaned with a wet brush, inserted in the bell, and carefully driven home. A small amount of mortar shall be inserted in the annular space for the upper two-thirds of the circumference. The gasket then shall be lapped at the top of the pipe and driven home in the annular space with a caulking tool. The remainder of the annular space then shall be filled completely with mortar and beveled at an angle of approximately 45 degrees with the outside of the bell. If mortar is not sufficiently stiff to prevent appreciable slump before setting, the outside of the joint thus made shall be wrapped with cheesecloth. Placing of this type of joint shall be kept at least five joints behind laying operations. The cement mortar, finish, and protection of joints shall be as specified in paragraph "MATERIALS FOR DRAINAGE STRUCTURES."

2.8 #.1 CEMENT-MORTAR DIAPER JOINT FOR BELL-AND-SPIGOT PIPE

The pipe shall be centered so that the annular space is uniform. The annular space shall be caulked with jute or oakum. Before caulking, the inside of the bell and the outside of the spigot shall be cleaned.

a. Diaper Bands: Diaper bands shall consist of heavy cloth fabric to hold grout in place at joints and shall be cut in such lengths that they will extend one-eighth of the circumference of pipe above the spring line on one side of the pipe and up to the spring line on the other side of the pipe. Longitudinal edges of fabric bands shall be rolled and stitched around two pieces of wire. Width of fabric bands shall be such that after fabric has been securely stitched around both edges on wires, the wires will be uniformly spaced not less than 8 inches apart. Wires shall be cut into lengths to pass around pipe with sufficient extra length for the ends to be twisted at top of pipe to hold the band securely in place; bands shall be accurately centered around lower portion of joint.

b. Grout: Grout shall be poured between band and pipe from only the high side of band, until grout rises to the top of band at the spring line of pipe, or as nearly so as possible, on the opposite side of pipe, to insure a thorough sealing of joint around the portion of pipe covered by the band. Silt, slush, water, or polluted mortar grout forced up on the lower side shall be carefully forced out by pouring and removed.

c. Remainder of Joint: The remaining unfilled upper portion of the joint shall then be filled with mortar and a bead formed around the outside of this upper portion of the joint with a sufficient amount of additional mortar. The diaper shall be left in place. Placing of this type of joint shall be kept at least five joints behind actual laying of pipe. No backfilling around joints shall be done until joints have been fully inspected and approved. The cement mortar, finish, and protection of joints shall be as specified in paragraph "MATERIALS FOR DRAINAGE STRUCTURES."

2.9 #.1 CEMENT-MORTAR TONGUE-AND-GROOVE JOINT

The first pipe shall be bedded carefully to the established gradeline with the groove upstream. A shallow excavation shall be made underneath the pipe

at the joint and filled with mortar to provide a bed for the pipe. The grooved end of the first pipe shall be carefully cleaned with a wet brush, and a layer of soft mortar applied to the lower half of the groove. The tongue of the second pipe shall be cleaned carefully with a wet brush; while in horizontal position, a layer of soft mortar shall be applied to the upper half of the tongue. The tongue end of the second pipe then shall be inserted in the grooved end of the first pipe until mortar is squeezed out on interior and exterior surfaces. Sufficient mortar shall be used to fill the joint completely and to form a bead on the outside. The cement mortar, finish, and protection of joints shall be as specified in paragraph "MATERIALS FOR DRAINAGE STRUCTURES."

2.10 #.1 CEMENT-MORTAR DIAPER JOINT FOR TONGUE-AND-GROOVE PIPE

The joint shall be of the type described for cement-mortar tongue-and-groove joint in this paragraph, except that the shallow excavation directly beneath the joint shall not be filled with mortar until after a gauze or cheesecloth band dipped in cement mortar has been wrapped around the outside of the joint. The cement-mortar bead at the joint shall be at least 1/2-inch thick, and the width of the diaper band shall be at least 8 inches. The diaper shall be left in place. Placing of this type of joint shall be kept at least five joints behind the actual laying of the pipe. No backfilling around the joints shall be done until the joints have been fully inspected and approved. The cement mortar, finish, and protection of joints shall be as specified in the paragraph "MATERIALS FOR DRAINAGE STRUCTURES."

2.11 #.1 PLASTIC SEALING COMPOUND JOINTS FOR TONGUE-AND-GROOVED PIPE

a. Materials: Design of joints and physical requirements for preformed plastic sealing compound shall conform to FS SS-S-210.

b. Installation: Sealing compounds shall follow the recommendation of the particular manufacturer in regard to special installation requirements. Surfaces to receive lubricants, primers, or adhesives shall be dry and clean. Sealing compounds shall be affixed to the pipe not more than 3 hours prior to installation of the pipe, and shall be protected from the sun, blowing dust, and other deleterious agents at all times. Sealing compounds shall be inspected before installation of the pipe, and any loose or improperly affixed sealing compound shall be removed and replaced. The pipe shall be aligned with the previously installed pipe, and the joint pulled together. If, while making the joint with mastic-type sealant, a slight protrusion of the material when the joint is pulled up, the pipe shall be removed and the joint remade. After the joint is made, all inner protrusions will be cut off flush with the inner surface of the pipe. If nonmastic-type sealant material is used, the "Squeeze-Out" requirement above shall be waived.

2.11.1.1 Flexible Watertight Joints

a. Materials: Flexible watertight joints shall be made with plastic or rubber-type gaskets for concrete pipe. The design of joints and the physical requirements for plastic gaskets shall conform to AASHTO M 198, and rubber-type gaskets shall conform to ASTM C 443 or AASHTO M 198.. Factory-fabricated resilient joint materials shall conform to ASTM C 425. Gaskets shall have not more than one factory-fabricated splice, except that two factory-fabricated splices of the rubber-type

gasket are permitted if the nominal diameter of the pipe being gasketed exceeds 54 inches.

b. Test Requirements: Watertight joints shall be tested and shall meet test requirements of paragraph "HYDROSTATIC TEST ON WATERTIGHT JOINTS." Gaskets or jointing materials shall not swell more than 100 percent by volume when immersed in accordance with Method 6211 of FED-STD 601 in immersion medium No. 3 for 70 hours at 212 degrees F. Gaskets or jointing materials shall meet the low-temperature flexibility requirements of FS HH-G-156. Certified copies of test results shall be delivered to the Contracting Officer before gaskets or jointing materials are installed. Alternate types of watertight joint may be furnished if specifically approved.

c. Installation: Gaskets and jointing materials shall be as recommended by the particular manufacturer in regard to use of lubricants, cements, adhesives, and other special installation requirements. Surfaces to receive lubricants, cements, or adhesives shall be clean and dry. Gaskets and jointing materials shall be affixed to the pipe not more than 24 hours prior to the installation of the pipe, and shall be protected from the sun, blowing dust, and other deleterious agents at all times. Gaskets and jointing materials shall be inspected before installing the pipe; any loose or improperly affixed gaskets and jointing materials shall be removed and replaced. The pipe shall be aligned with the previously installed pipe, and the joint pushed home. If, while the joint is being made the gasket becomes visibly dislocated the pipe shall be removed and the joint remade.

2.11.1.2 PVC Plastic Pipes

Joints shall be in accordance with the requirements of ASTM D 3212.

2.11.1.3 Corrugated PE Plastic Pipe

Joints, couplings and fittings shall be as recommended by the pipe manufacturer.

2.12 #.1 DUCTILE IRON PIPE

Joints, couplings, and fittings shall be as recommended by the pipe manufacturer.

2.12.1 Riprap

Riprap shall be placed as indicated and shall consist of broken stone, broken concrete rubble, or broken concrete slabs. Riprap shall be free from segregation, seams, cracks, and other defects tending to destroy its resistance to weather and shall conform to the following:

Degradation Factor	15% Minimum
Los Angeles Wear, 500 Rev.	50% Maximum
Specific Gravity	2.55 Minimum

Sieve Size	Percent Passing

8 inch	100%
3 inch	30% Maximum
3/4 inch	10% Maximum

2.12.2 Geotextile Fabric

Place geotextile fabric as indicated. Any geotextile fabric damaged during installation and construction shall be replaced to the satisfaction of the Contracting Officer. Geotextile fabric shall conform to the following:

Puncture resistance (5/16 inch DIA. Rod Puncture) shall have a minimum puncture resistance of 65 lbf.

Effective opening size shall be within the limits of 0.4 mm and 0.8 mm.

Thickness of geotextile fabric shall be within the limits of 50 mil and 80 mil.

2.12.3 Washed Drain Rock

Washed drain rock shall be placed as indicated, and shall be free from seams, cracks, and other defects tending to destroy its resistance to weather. Washed drain rock shall conform to the following:

Sieve Size	Percent Passing
4 inch	100%
1 inch	20% Maximum
1/2 inch	5% Maximum
Degradation Factor	15% Minimum

3 EXECUTION

3.1 EXCAVATION FOR STORM DRAINS, AND DRAINAGE STRUCTURES

Excavation of trenches and for appurtenances and backfilling for storm drains shall be in accordance with the applicable portions of Section 02222 EXCAVATION, TRENCHING, AND BACKFILLING FOR UTILITIES SYSTEMS and the following requirements:

3.1.1 Trenching

The width of trenches at any point below the top of the pipe shall conform to the plan detail and Section 02222 EXCAVATION, TRENCHING, AND BACKFILLING FOR UTILITIES SYSTEMS. Sheeting and bracing where required shall be placed within the trench width as directed by the Contracting Officer. Care shall be taken not to overexcavate. Where trench widths are exceeded, redesign with a resultant increase in cost of stronger pipe or special installation procedures shall be necessary. Cost of this redesign and increased cost of pipe or installation shall be borne by the Contractor without additional cost to the Government.

3.1.2 Removal of Unstable Material

Where wet or otherwise unstable soil incapable of properly supporting the drainage structure or pipe, as determined by the Contracting Officer, is

unexpectedly encountered in the bottom of a trench, such material shall be removed to the depth required and replaced to the proper grade with select granular material, specified in section: "EXCAVATION, TRENCHING AND BACKFILLING FOR UTILITY SYSTEMS" and as provided in paragraph BACKFILLING. When removal of unstable material is due to the fault or neglect of the Contractor in his performance of shoring and sheeting, water removal, or other specified requirements, such removal and replacement shall be performed at no additional cost to the government.

3.2 BEDDING

The bedding surface for the pipe shall provide a firm foundation of uniform density throughout the entire length of the pipe.

3.2.1 Concrete Pipe

When no bedding class is specified or detailed on the drawings, concrete pipe shall be bedded carefully in a soil foundation accurately shaped and rounded to conform to the lowest one-fourth of the outside portion of circular pipe or to the lower curved portion of pipe arch for the entire length of the pipe or pipe arch. When necessary, the bedding shall be tamped. Bell holes and depressions for joints shall be only of such length, depth, and width as required for properly making the particular type of joint.

3.2.2 Plastic and Ductile Iron Pipe

Bedding for PVC and PE pipe shall meet the requirements of ASTM D 2321. Bedding, haunching, and initial backfill shall be either Class IB or II material.

3.3 PLACING PIPE

Each pipe shall be carefully examined before being laid, and defective or damaged pipe shall not be used. Pipelines shall be laid to the grades and alignment indicated. Proper facilities shall be provided for lowering sections of pipe into trenches. Lifting lugs in vertically elongated metal pipe shall be placed in the same vertical plane as the major axis of the pipe. Under no circumstances shall pipe be laid in water, and no pipe shall be laid when trench conditions or weather are unsuitable for such work. Diversion of drainage or dewatering of trenches during construction shall be provided as necessary. All pipe in place shall be inspected before backfilling, and those pipes damaged during placement shall be removed and replaced.

3.3.1 Concrete, PVC and Ductile Iron Pipe

Laying shall proceed upgrade with spigot ends of bell-and-spigot pipe and tongue ends of tongue-and-groove pipe pointing in the direction of flow.

3.3.2 Smooth Interior PE Pipe

Laying shall be with the separate sections joined firmly on a bed shaped to line and grade and shall follow manufacturer's recommendations.

3.4 BACKFILLING

3.5 #.1 BACKFILLING PIPE IN TRENCHES

Backfilling pipe in trenches shall conform to Section 02222 EXCAVATION TRENCHING AND BACKFILLING FOR UTILITIES SYSTEMS.

3.6 #.1 MOVEMENT OF CONSTRUCTION MACHINERY

In compacting by rolling or operating heavy equipment parallel with the pipe, displacement of or injury to the pipe shall be avoided. Movement of construction machinery over a storm drain at any stage of construction shall be at the Contractor's risk. Any damaged pipe thereby shall be repaired or replaced.

3.7 #.1 COMPACTION

Compaction shall conform to Section 02222 EXCAVATION, TRENCHING AND BACKFILLING FOR UTILITIES SYSTEMS or Section 02225 EARTHWORK FOR ROADWAYS AND PARKING LOTS, whichever controls at that specific depth of material below finished grade.

3.8 #.1 GENERAL

Cohesionless materials include gravels, gravel-sand mixtures, sands, and gravelly sands. Cohesive materials include clayey and silty gravels, gravel-silt mixtures, clayey and silty sands, sand-clay mixtures, clays, silts, and very fine sands. When results of compaction tests for moisture-density relations are recorded on graphs, cohesionless soils will show straight lines or reverse-shaped moisture-density curves, and cohesive soils will show normal moisture-density curves.

3.9 #.1 DETERMINATION OF DENSITY

Testing shall be the responsibility of the Contractor and performed at no additional cost to the Government. Testing shall be performed by an approved commercial testing laboratory or by the Contractor subject to approval. Tests shall be performed in sufficient number to ensure that specified density if being obtained. Minimum number of tests shall be made in accordance with Section 01400, contractor quality control. Laboratory tests for moisture-density relations shall be made in accordance with ASTM D 1557 except that mechanical tampers may be used provided the results are correlated with those obtained with the specified hand tamper. Field density tests shall be determined in accordance with ASTM D 2167 or ASTM D 1556. Test results shall be furnished the Contracting Officer.

3.10 PIPELINE TESTING

Lines shall be tested for leakage by infiltration or exfiltration tests. Prior to testing for leakage the trench shall be backfilled up to at least the lower half of the pipe. If required, sufficient additional backfill shall be placed to prevent pipe movement during testing, leaving the joints uncovered to permit inspection. Visible leaks encountered shall be corrected regardless of leakage test results. When the water table is 2 feet or more above the top of the pipe at the upper end of the pipeline section to be tested, infiltration shall be measured using a suitable weir or other device acceptable to the Contracting Officer. An exfiltration test

shall be made by filling the line to be tested with water so that a head of at least 2 feet is provided above both the water table and the top of the pipe at the upper end of the pipeline to be tested. The filled line shall be allowed to stand until the pipe has reached its maximum absorption, but not less than 4 hours. After absorption, the head shall be reestablished. The amount of water required to maintain this water level during a 2-hour test period shall be measured. Leakage as measured by the exfiltration test shall not exceed (0.2 gallons per inch in diameter per 100 feet) 0.2 gallons per inch in diameter per 100 feet of pipeline per hour. When leakage exceeds the maximum amount specified, satisfactory correction shall be made and retesting accomplished. Testing, correcting, and retesting shall be made at no additional cost to the Government.

SECTION 02730

SANITARY SEWERS

1 GENERAL

1.1 REFERENCES

The publications listed below form a part of this specification to the extent referenced. The publications are referred to in the text by basic designation only.

AMERICAN RAILWAY ENGINEERING ASSOCIATION (AREA)

AREA-03	(1992) Manual for Railway Engineering (Fixed Properties): Chapter 1, Roadway and Ballast

AMERICAN SOCIETY FOR TESTING AND MATERIALS (ASTM)

ASTM A 74	(1987) Cast Iron Soil Pipe and Fittings
ASTM A 123	(1989a) Zinc (Hot-Dip Galvanized) Coatings on Iron and Steel Products
ASTM C 14	(1990) Concrete Sewer, Storm Drain, and Culvert Pipe
ASTM C 33	(1990) Concrete Aggregates
ASTM C 76	(1990) Reinforced Concrete Culvert, Storm Drain, and Sewer Pipe
ASTM C 94	(1990) Ready-Mixed Concrete
ASTM C 150	(1989) Portland Cement
ASTM C 260	(1986) Air-Entraining Admixtures for Concrete
ASTM C 270	(1991a) Mortar for Unit Masonry
ASTM C 425	(1991) Compression Joints for Vitrified Clay Pipe and Fittings
ASTM C 443	(1985a; R 1990) Joints for Circular Concrete Sewer and Culvert Pipe, Using Rubber Gaskets
ASTM C 478	(1990b) Precast Reinforced Concrete Manhole Sections
ASTM C 564	(1988) Rubber Gaskets for Cast Iron Soil Pipe and Fittings
ASTM C 700	(1991) Vitrified Clay Pipe, Extra Strength, Standard Strength, and Perforated

ASTM C 828	(1990) Low-Pressure Air Test of Vitrified Clay Pipe Lines
ASTM C 924	(1989) Concrete Pipe Sewer Lines by Low-Pressure Air Test Method
ASTM D 1784	(1990) Rigid Poly(Vinyl Chloride) (PVC) Compounds and Chlorinated Poly(Vinyl Chloride) (CPVC) Compounds
ASTM D 2680	(1990) Acrylonitrile-Butadiene-Styrene (ABS) and Poly(Vinyl Chloride) (PVC) Composite Sewer Piping
ASTM D 2751	(1991) Acrylonitrile-Butadiene-Styrene (ABS) Sewer Pipe and Fittings
ASTM D 2996	(1988) Filament-Wound "Fiberglass" (Glass-Fiber-Reinforced Thermosetting-Resin) Pipe
ASTM D 2997	(1990) Centrifugally Cast "Fiberglass" (Glass-Fiber-Reinforced-Thermosetting-Resin) Pipe
ASTM D 3034	(1989) Type PSM Poly(Vinyl Chloride) (PVC) Sewer Pipe and Fittings
ASTM D 3212	(1989) Joints for Drain and Sewer Plastic Pipes Using Flexible Elastomeric Seals
ASTM D 3262	(1988) "Fiberglass" (Glass-Fiber-Reinforced Thermosetting Resin) Sewer Pipe
ASTM D 3350	(1984) Polyethylene Plastics Pipe and Fittings Materials
ASTM D 3753	(1981; R 1991) Glass-Fiber-Reinforced Polyester Manholes
ASTM D 3840	(1988) "Fiberglass" (Glass-Fiber -Reinforced Thermosetting-Resin) Pipe Fittings for Nonpressure Applications
ASTM F 402	(1988) Safe Handling of Solvent Cements, Primers, and Cleaners Used for Joining Thermoplastic Pipe and Fittings
ASTM F 477	(1990) Elastomeric Seals (Gaskets) for Joining Plastic Pipe
ASTM F 714	(1990) Polyethylene (PE) Plastic pipe (SDR-PR) Based on Outside Diameter
ASTM F 794	(1991) Poly(Vinyl Chloride) (PVC) Profile Gravity Sewer Pipe and Fittings Based on Controlled Inside Diameter

ASTM F 894	(1990) Polyethylene (PE) Large Diameter Profile Wall Sewer and Drain Pipe
ASTM F 949	(1991a) Poly(Vinyl Chloride) (PVC) Corrugated Sewer Pipe with a Smooth Interior and Fittings

AMERICAN WATER WORKS ASSOCIATION (AWWA)

AWWA C105	(1988) Polyethylene Encasement for Ductile-Iron Piping for Water and Other Liquids
AWWA C110	(1987) Ductile-Iron and Gray-Iron Fittings, 3 In. Through 48 In., for Water and Other Liquids
AWWA C111	(1990) Rubber-Gasket Joints for Ductile-Iron Pressure Pipe and Fittings
AWWA C115	(1988) Flanged Ductile-Iron Pipe with Threaded Flanges
AWWA C151	(1986) Ductile-Iron Pipe, Centrifugally Cast in Metal Molds or Sand-Lined Molds, for Water or Other Liquids

FEDERAL SPECIFICATIONS (FS)

FS QQ-C-40	(Basic; Am 2; Notice 1) Calking: Lead Wool and Lead Pig
FS RR-F-621	(Rev E) Frames, Covers, Gratings, Steps, Sump and Catch Basin, Manhole

NATIONAL FIRE PROTECTION ASSOCIATION (NFPA)

NFPA 49	(1975) Hazardous Chemicals Data
NFPA 325M	(1991) Fire Hazard Properties of Flammable Liquids, Gases, and Volatile Solids
NFPA 704	(1990) Identification of the Fire Hazards of Materials

UNI-BELL PVC PIPE ASSOCIATION (UBPPA)

UBPPA UNI-B-6	(1990) Low-Pressure Air Testing of Installed Sewer Pipe
UBPPA UNI-B-9	(1990) Polyvinyl Chloride (PVC) Profile Wall Gravity Sewer Pipe and Fittings Based on Controlled Inside Diameter (Nominal Pipe Sizes 4-48 inch)

WASHINGTON STATE DEPARTMENT OF TRANSPORTATION (WSDOT)

WSDOT	Standard Plans

1.2 GENERAL REQUIREMENTS

The construction required herein shall include appurtenant structures and building sewers to points of connection with the building drains 5 feet outside the building to which the sewer system is to be connected. The Contractor shall replace damaged material and redo unacceptable work at no additional cost to the Government. Excavation and backfilling is specified in Section 02222 EXCAVATION, TRENCHING, AND BACKFILLING FOR UTILITIES SYSTEMS. Backfilling shall be accomplished after inspection by the Contracting Officer. Before, during, and after installation, plastic pipe and fittings shall be protected from any environment that would result in damage or deterioration to the material. The Contractor shall have a copy of the manufacturer's instructions available at the construction site at all times and shall follow these instructions unless directed otherwise by the Contracting Officer. Solvents, solvent compounds, lubricants, elastomeric gaskets, and any similar materials required to install the plastic pipe shall be stored in accordance with the manufacturer's recommendation and shall be discarded if the storage period exceeds the recommended shelf life. Solvents in use shall be discarded when the recommended pot life is exceeded.

1.3 SUBMITTALS

Government approval is required for submittals with a "GA" designation; submittals having an "FIO" designation are for information only. The following shall be submitted in accordance with Section 01330 SUBMITTAL PROCEDURES:

SD-13 Certificates

Portland Cement; FIO

Certificates of compliance stating the type of cement used in manufacture of concrete pipe, fittings and precast manholes.

2 PRODUCTS

2.1 PIPE

The following pipe types are acceptable for use as sewer pipe. Pipe shall conform to the respective specifications and other requirements specified below.

2.1.1 Plastic Pipe

Acrylonitrile-butadiene-styrene (ABS) and polyvinyl chloride (PVC) composite sewer piping shall conform to ASTM D 2680.

2.1.1.1 ABS Pipe

ASTM D 2751.

2.1.1.2 PVC Pipe

ASTM D 3034, Type PSM with a maximum SDR of 35. ASTM F 949 for corrugated sewer pipes with a smooth interior. UBPPA UNI-B-9 and ASTM F 794, Series

46, for ribbed sewer pipe with smooth interior. PVC shall be certified by the compounder as meeting the requirements of ASTM D 1784, cell Class 12454B. The pipe stiffness shall be greater than or equal to 735/D for cohesionless material pipe trench backfills.

2.1.2 Ductile Iron Pipe

Pipe shall conform to AWWA C151 unless otherwise shown or specified.

2.1.3 Cast Iron Soil Pipe

ASTM A 74, Class SV.

2.1.4 Clay Pipe

ASTM C 700.

2.1.5 Concrete Pipe

ASTM C 76, Class IV

2.2 FITTINGS

Fittings shall be compatible with the pipe supplied and shall have a strength not less than that of the pipe. Fittings shall conform to the respective specifications and other requirements specified below.

2.2.1 Concrete Pipe

ASTM C 14.

2.2.2 Plastic Pipe

ABS and PVC composite sewer pipe fittings shall conform to ASTM D 2680.

2.2.2.1 ABS Pipe

ASTM D 2751.

2.2.2.2 PVC Pipe

ASTM D 3034 for type PSM pipe. ASTM F 949 for corrugated sewer pipe with a smooth interior. UBPPA UNI-B-9 and ASTM F 794, Series 46, for ribbed sewer pipe with smooth interior.

2.2.3 Ductile Iron Pipe

Mechanical fittings shall conform to AWWA C110, rated for 150 psi. Push-on fittings shall conform to AWWA C110and AWWA C111, rated for 150 psi.

2.2.4 Cast Iron Soil Pipe

ASTM A 74.

2.2.5 Clay Pipe

ASTM C 700.

2.3 JOINTS

Joints installation shall comply with the manufacturer's instructions.

2.3.1 Concrete Pipe

Joints and gaskets shall conform to ASTM C 443.

2.3.2 Plastic Pipe

Flexible plastic pipe (PVC or high density polyethylene pipe) gasketed joints shall conform to ASTM D 3212.

2.3.2.1 ABS Pipe

ASTM D 2751, solvent weld or bell and spigot O-ring joint, size 12 inches or less in diameter, dimensions and tolerances in accordance with Table 2 therein.

2.4 CLEAN-OUTS

Clean-out(s) shall conform to WSDOT / APWA Standard Plan B-18b.

2.4.1 Ductile Iron Pipe

Push-on joints shall conform to AWWA C111. Mechanical joints shall conform to AWWA C111 as modified by AWWA C151. Flanged joints shall conform to AWWA C115.

2.4.2 Cast Iron Soil Pipe

Rubber gaskets for compression joints shall conform to ASTM C 564. Packing material for caulked joints shall be twisted jute or oakum, tarred type, or asphalt-saturated cellulose-fiber. Joints for acid resisting cast iron soil pipe shall be made with acid resistant non-asbestos packing. The packing shall contain no material which would affect adhesion of the joint sealing material to the pipe. Lead shall conform to FS QQ-C-40.

2.4.3 Clay Pipe

Compression joints shall conform to ASTM C 425.

2.5 CEMENT MORTAR

Cement mortar shall conform to ASTM C 270, Type M with Type II cement.

2.6 MANHOLES

Manholes shall conform to WSDOT Standard Plan B-23c.

2.6.1 Precast Reinforced Concrete Manhole Sections

Precast reinforced concrete manhole sections shall conform to ASTM C 478, except that portland cement shall be as specified herein. Joints shall be cement mortar, or an approved mastic or rubber gasket, or an approved combination of these types.

3 EXECUTION

3.1 INSTALLATION

3.1.1 Adjacent Facilities

3.1.1.1 Water Lines

Where the location of the sewer is not clearly defined by dimensions on the drawings, the sewer shall not be closer horizontally than 10 feet to a water-supply main or service line, except that where the bottom of the water pipe will be at least 12 inches above the top of the sewer pipe, the horizontal spacing may be a minimum of 6 feet. Where gravity-flow sewers cross above water lines, the sewer pipe for a distance of 10 feet on each side of the crossing shall be fully encased in concrete or shall be acceptable pressure pipe with no joint closer horizontally than 3 feet to the crossing. The thickness of the concrete encasement including that at the pipe joints shall be not less than 4 inches.

3.1.2 Pipe Laying

a. Pipe shall be protected during handling against impact shocks and free fall and the pipe interior shall be free of extraneous material.

b. Pipe laying shall proceed upgrade with the spigot ends of bell-and-spigot pipe and tongue ends of tongue-and-groove pipe pointing in the direction of the flow. Each pipe shall be laid accurately to the line and grade shown on the drawings. Pipe shall be laid and centered so that the sewer has a uniform invert. As the work progresses, the interior of the sewer shall be cleared of all superfluous materials.

c. Before making pipe joints all surfaces of the portions of the pipe to be joined shall be clean and dry. Lubricants, primers, and adhesives shall be used as recommended by the pipe manufacturer. The joints shall then be placed, fitted, joined, and adjusted to obtain the degree of water tightness required.

d. ABS composite pipe ends with exposed truss and filler material shall be coated with solvent weld material before making the joint to prevent water or air passage at the joint between the inner and outer wall of the pipe.

e. Installations of solvent weld joint pipe, using ABS or PVC pipe and fittings shall be in accordance with ASTM F 402. All required precautions shall be taken to assure adequate trench ventilation and protection for workers installing the pipe.

3.1.2.1 Caulked Joints

The packing material shall be well packed into the annular space to prevent the entrance of lead into the pipe. The remainder of the space shall be filled with molten lead that is hot enough to show a rapid change in color when stirred. Scum shall be removed before pouring. The lead shall be caulked to form a tight joint without overstraining the bell and shall have a minimum depth of 1 inch after caulking.

3.1.2.2 Trenches

Trenches shall be kept free of water and as dry as possible during bedding, laying, and jointing and for as long a period as required. When work is not in progress, open ends of pipe and fittings shall be satisfactorily closed so that no trench water or other material will enter the pipe or fittings.

3.1.2.3 Backfill

As soon as possible after the joint is made, sufficient backfill material shall be placed along the pipe to prevent pipe movement off line or grade. Plastic pipe shall be completely covered to prevent damage from ultraviolet light.

3.1.2.4 Width of Trench

If the maximum width of the trench at the top of the pipe, as specified in Section 02222 EXCAVATION, TRENCHING, AND BACKFILLING FOR UTILITIES SYSTEMS, is exceeded for any reason other than by direction, the Contractor shall install at no additional cost to the Government such concrete cradling, pipe encasement, or other bedding required to support the added load of the backfill.

3.1.2.5 Joints

Joints between different pipe materials shall be made as specified, using approved jointing materials.

3.1.2.6 Handling and Storage

Pipe, fittings and joint material shall be handled and stored in accordance with the manufacturer's recommendations. Storage facilities for plastic pipe, fittings, joint materials and solvents shall be classified and marked in accordance with NFPA 704, with classification as indicated in NFPA 49 and NFPA 325M.

3.1.3 Leakage Tests

Lines shall be tested for leakage by low pressure air testing, infiltration tests or exfiltration tests, as appropriate. Low pressure air testing for vitrified clay pipes shall be as prescribed in ASTM C 828. Low pressure air testing for concrete pipes shall be as prescribed in ASTM C 828. Low pressure air testing for PVC pipe shall be as prescribed in UBPPA UNI-B-6. Low pressure air testing procedures for other pipe materials shall use the pressures and testing times prescribed in ASTM C 828 and ASTM C 924, after consultation with the pipe manufacturer. Prior to infiltration or exfiltration tests the trench shall be backfilled up to at least the lower half of the pipe. If required, sufficient additional backfill shall be placed to prevent pipe movement during testing, leaving the joints uncovered to permit inspection. Visible leaks encountered shall be corrected regardless of leakage test results. When the water table is 2 feet or more above the top of the pipe at the upper end of the pipeline section to be tested, infiltration shall be measured using a suitable weir or other device acceptable to the Contracting Officer. When the Contracting Officer determines that infiltration cannot be properly tested, an exfiltration test shall be made by filling the line to be tested with water so that a head of at least 2 feet is provided above both the water table and the top of the

pipe at the upper end of the pipeline to be tested. The filled line shall be allowed to stand until the pipe has reached its maximum absorption, but not less than 4 hours. After absorption, the head shall be re-established. The amount of water required to maintain this water level during a 2-hour test period shall be measured. Leakage as measured by either the infiltration test or exfiltration test shall not exceed 0.2 gallons per inch diameter per 100 feet of pipeline per hour. When leakage exceeds the maximum amount specified, satisfactory correction shall be made and retesting accomplished. Testing, correction, and retesting shall be made at no additional cost to the Government.

3.1.4 Test for Deflection

When flexible pipe is used, a deflection test shall be made on the entire length of the installed pipeline not less than 30 days after the completion of all work including the leakage test, backfill, and placement of any fill, grading, paving, concrete, or superimposed loads. Deflection shall be determined by use of a deflection device or by use of a spherical, spheroidal, or elliptical ball, a cylinder, or circular sections fused to a common shaft. The ball, cylinder, or circular sections shall have a diameter, or minor diameter as applicable, of 92.5 percent of the inside diameter of the pipe, but 95 percent for RPMP and RTRP. A tolerance of plus 0.5 percent will be permitted. The ball, cylinder, or circular sections shall be of a homogeneous material throughout, shall have a density greater than 1.0 as related to water at 39.2 degrees F, and shall have a surface brinell hardness of not less than 150. It shall be center bored and through bolted with a 1/4-inch minimum diameter steel shaft having a yield strength of 70,000 psi or more, with eyes at each end for attaching pulling cables. The eye shall be suitably backed with flange or heavy washer such that a pull exerted on the opposite end of the shaft shall produce compression throughout the remote end of the ball, cylinder or circular section. Circular sections shall be so spaced that the distance from the external faces of the front and back sections shall equal or exceed the diameter of the circular section. Failure of the ball, cylinder, or circular section to pass freely through a pipe run, either by being pulled through or by being flushed through with water, shall be cause for rejection of that run. When a deflection device is used for the test in lieu of the ball, cylinder, or circular sections described, such device shall be approved prior to use. The device shall be sensitive to 1.0 percent of the diameter of the pipe being measured and shall be accurate to 1.0 percent of the indicated dimension. Installed pipe showing deflections greater than 7.5 percent of the normal diameter of the pipe, or 5 percent for RTRP and RPMP, shall be retested by a run from the opposite direction. If the retest also fails, the suspect pipe shall be replaced at no cost to the Government.

3.2 CONNECTIONS TO EXISTING MANHOLES

Pipe connections to existing manholes shall be made in such manner that the finish work will conform as nearly as practicable to the essential applicable requirements specified for new manholes, including all necessary concrete work, cutting, and shaping. The connection shall be centered on the manhole. Holes for the new pipe shall be of sufficient diameter to allow packing cement mortar around the entire periphery of the pipe but no larger than 1-1/2 times the diameter of the pipe. Cutting the manhole shall be done in a manner that will cause the least damage to the walls.

3.3 BUILDING CONNECTIONS

Building connections shall include the lines to and connection with the building waste drainage piping at a point approximately 5 feet outside the building, unless otherwise indicated. Where building drain piping is not installed, the Contractor shall terminate the building connections approximately 5 feet from the site of the building at a point and in a manner designated.

3.4 CLEANOUTS AND OTHER APPURTENANCES

Cleanouts and other appurtenances shall be installed where shown on the drawings or as directed by the Contracting Officer, and shall conform to the detail of the drawings.

SECTION 02811

UNDERGROUND SPRINKLER SYSTEMS

1 GENERAL

1.1 REFERENCES

The publications listed below form a part of this specification to the extent referenced. The publications are referred to in the text by the basic designation only.

AMERICAN SOCIETY FOR TESTING AND MATERIALS (ASTM)

ASTM A 53	(1995a) Pipe, Steel, Black and Hot-Dipped, Zinc-Coated Welded and Seamless
ASTM B 32	(1995b) Solder Metal
ASTM B 43	(1994) Seamless Red Brass Pipe, Standard Sizes
ASTM B 88	(1995a) Seamless Copper Water Tube
ASTM D 1785	&(1994) Poly(Vinyl Chloride) (PVC) Plastic Pipe, Schedules 40, 80, and 120
ASTM D 2241	(1994) Poly(Vinyl Chloride) (PVC) Pressure-Rated Pipe (SDR Series)
ASTM D 2287	(1992) Nonrigid Vinyl Chloride Polymer and Copolymer Molding and Extrusion Compounds
ASTM D 2464	(1994) Threaded Poly(Vinyl Chloride) (PVC) Plastic Pipe Fittings, Schedule 80
ASTM D 2466	(1994a) Poly(Vinyl Chloride) (PVC) Plastic Pipe Fittings, Schedule 40
ASTM D 2564	(1993) Solvent Cements for Poly(Vinyl Chloride) (PVC) Plastic Piping Systems
ASTM D 2774	(1972; R 1983) Underground Installation of Thermoplastic Pressure Piping
ASTM D 2855	(1993) Making Solvent-Cemented Joints with Poly(Vinyl Chloride) (PVC) Pipe and Fittings
ASTM D 3261	(1993) Butt Heat Fusion Polyethylene (PE) Plastic Fittings for Polyethylene (PE) Plastic Pipe and Tubing
ASTM F 441	(1995) Chlorinated Poly(Vinyl Chloride) (CPVC) Plastic Pipe, Schedules 40 and 80

AMERICAN SOCIETY OF MECHANICAL ENGINEERS (ASME)

PDI WH 201	(1992) Water Hammer Arresters
ASME B1.2	(1983; R 1991; Errata May 1992) Gages and Gaging for Unified Inch Screw Threads
ASME B16.3	(1992) Malleable Iron Threaded Fittings, Classes 150 and 300
ASME B16.15	(1985; R 1994) Cast Bronze Threaded Fittings Classes 125 and 250
ASME B16.18	(1984; R 1994) Cast Copper Alloy Solder Joint Pressure Fittings
ASME B16.22	(1995) Wrought Copper and Copper Alloy Solder Joint Pressure Fittings
ASME B40.1	(1991) Gauges - Pressure Indicating Dial Type - Elastic Element

AMERICAN SOCIETY OF SANITARY ENGINEERING (ASSE)

ASSE 1012	(1995) Backflow Preventers with Intermediate Atmospheric Vent
ASSE 1013	(1993) Reduced Pressure Principle Backflow Preventers
ASSE 1020	(1989) Pressure Vacuum Breaker Assembly (Recommended for Outdoor Usage)

AMERICAN WATER WORKS ASSOCIATION (AWWA)

AWWA C509	(1994) Resilient-Seated Gate Valves for Water and Sewerage Systems
AWWA C901	(1988; Errata April 1988) Polyethylene (PE) Pressure Pipe and Tubing, 1/2 In. Through 3 In., for Water Service

COMMERCIAL ITEM DESCRIPTIONS (CID)

CID A-A-51145	(Rev C) Flux, Soldering, Non-Electronic, Paste & Liquid

FOUNDATION FOR CROSS-CONNECTION CONTROL AND HYDRAULIC RESEARCH (FCCHR)

FCCHR-01	(1993) Manual of Cross-Connection Control

MANUFACTURERS STANDARDIZATION SOCIETY OF THE VALVE AND FITTINGS INDUSTRY (MSS)

MSS SP-80	(1987) Bronze Gate, Globe, Angle and Check Valves
MSS SP-85	(1994) Cast Iron Globe & Angle Valves Flanged and Threaded Ends

NATIONAL ELECTRICAL MANUFACTURERS ASSOCIATION (NEMA)

NEMA ICS 2	(1993) Industrial Control and Systems, Controllers, Contactors, and Overload Relays Rated Not More Than 2,000 Volts AC or 750 DC
NEMA ICS 6	(1993) Enclosures for Industrial Control and Systems,

NATIONAL FIRE PROTECTION ASSOCIATION (NFPA)

NFPA 70	(1996) National Electrical Code

1.2 PERFORMANCE REQUIREMENTS

System shall operate with a minimum water pressure of 60 psi at connection to backflow prevention device and 20 psi at the last head in each zone.

1.3 SUBMITTALS

Government approval is required for submittals with a "GA" designation; submittals having an "FIO" designation are for information only. The following shall be submitted in accordance with Section 01330 SUBMITTAL PROCEDURES:

SD-01 Data

Framed Instructions; GA.

Labels, signs, and templates of operating instructions that are required to be mounted or installed on or near the product for normal, safe operation.

Field Training Data; GA.

Information describing training to be provided, training aids to be used, samples of training materials to be provided, and schedules and notification of training.

Spare Parts; GA.

Spare parts data for each different item of material and equipment specified, after approval of the related submittals and not later than the start of the field tests. The data shall include a complete list of parts and supplies, with current unit prices and source of supply.

SD-04 Drawings

Sprinkler System; GA.

As-built Drawings which provide current factual information showing locations of mains, heads, valves, and controllers including deviations from and amendments to the drawings and changes in the work shall be included.

SD-06 Instructions

Sprinkler System; GA.

Detailed procedures defining the Contractor's provisions for accident prevention, health protection, and other safety precautions for the work to be done.

SD-09 Reports

Field Tests; GA.

Performance test reports in booklet form showing all field tests performed to adjust each component and all field tests performed to prove compliance with the specified performance criteria, upon completion and testing of the installed system. Each test report shall indicate the final position of control valves.

SD-13 Certificates

Sprinkler System; GA.

The material supplier's or equipment manufacturer's statement that the supplied material or equipment meets specified requirements. Each certificate shall be signed by an official authorized to certify in behalf of material supplier or product manufacturer and shall identify quantity and date or dates of shipment or delivery to which the certificates apply.

SD-19 Operation and Maintenance Manuals

Sprinkler System; GA.

Six copies of operation and six copies of maintenance manuals for the equipment furnished. One complete set prior to field testing and the remainder upon acceptance. Manuals shall be approved prior to the field training course. Operating manuals shall detail the step-by-step procedures required for system startup, operation, and shutdown. Operating manuals shall include the manufacturer's name, model number, parts list, and brief description of all equipment and their basic operating features. Maintenance manuals shall list routine maintenance procedures, possible breakdowns and repairs, and troubleshooting guides. Maintenance manuals shall include piping and equipment layout, simplified wiring and control diagrams of the system as installed, and system programming schedule.

1.4 DELIVERY AND STORAGE

All equipment delivered and placed in storage shall be protected from the weather; excessive humidity and temperature variation; direct sunlight (in the case of plastic or rubber materials); and dirt, dust, or other contaminants.

1.5 FIELD MEASUREMENTS

The Contractor shall verify all dimensions in the field and shall advise the Contracting Officer of any discrepancy before performing the work.

2 PRODUCTS

2.1 GENERAL MATERIALS AND EQUIPMENT REQUIREMENTS

2.1.1 Standard Products

Materials and equipment shall be the standard products of a manufacturer who has produced similar systems which have performed well for a minimum period of 2 years prior to bid opening. Equipment shall be supported by a service organization that is, in the opinion of the Contracting Officer, reasonably convenient to the site.

2.1.2 Nameplates

Each item of equipment shall have the manufacturer's name, address, type or style, model or serial number, and catalog number on a plate secured to the item of equipment.

2.1.3 Extra Stock

The following extra stock shall be provided: Two sprinkler heads of each size and type, two valve keys for operating manual valves, two wrenches for removing and installing each type of head, two quick coupler keys and hose swivels, and four irrigation controller housing keys.

2.2 PIPING MATERIALS

2.2.1 Galvanized Steel Pipe and Associated Fittings

2.2.1.1 Pipe

Pipe shall conform to requirements of ASTM A 53, Schedule 40.

2.2.1.2 Fittings

Fittings shall be Class 150 conforming to requirements of ASME B16.3.

2.2.2 Polyvinyl Chloride (PVC) Pipe, Fittings and Solvent Cement

2.2.2.1 Pipe

Pipe shall conform to the requirements of ASTM D 1785, PVC 1120 Schedule 40; or ASTM D 2241, PVC 1120 SDR 21, Class 200.

2.2.2.2 Fittings

Solvent welded socket type fittings shall conform to requirements of ASTM D 2466, Schedule 40. Threaded type fittings shall conform to requirements of ASTM D 2464, Schedule 80.

2.2.2.3 Solvent Cement

Solvent cement shall conform to the requirements of ASTM D 2564.

2.2.3 Dielectric Fittings

Fittings shall conform to ASTM F 441, Schedule 80, CPVC threaded pipe nipples, 4 inch minimum length.

2.3 SPRINKLER HEADS

2.3.1 Pop-Up Spray Heads

Pop-up spray heads lay flush with housing, then pop up when water pressure 20 psi is activated in system. The rising member supporting the nozzle shall be identical on full, half, third or quarter pattern sprinklers so that nozzles will be interchangeable. The sprinkler head shall be designed to be adjustable for coverage and flow. The nozzle shall be removable so head does not have to be removed for flushing or cleaning. Nozzle rises a minimum of 4 inchesabove the body. The body shall be constructed with a 1/2 inch female thread for installation in a fixed underground pipe system.

2.3.1.1 Shrubbery Sprinkler Heads

Sprinkler heads shall be conical spray with adjustable or non-adjustable coverage and designed for permanent aboveground mounting on riser or pop-ups at a height compatible with ground covers. Provide brass nozzles.

2.3.2 Rotary Pop-Up Sprinklers

Sprinklers shall be capable of covering 36 feet in diameter at 30 psi with a metered distribution rate, 4 inches pop-up, trajectory of 15 degrees, and maximum height of spray of 5.5 feet. Construction shall be high impact molded plastic with filter screen, reducible watering radius, and choice of 8 nozzles and have adjustable radius capabilities.

2.4 VALVES

2.4.1 Gate Valves

Gate valves shall conform to the requirements of MSS SP-80, Type 1, Class 150, threaded ends.

2.4.2 Angle Valves

Angle valves shall conform to the requirements of MSS SP-80, Type 3, Class 150 threaded ends.

2.4.3 Quick Coupling Valves

Quick coupling valves shall have brass parts and shall be two-piece unit consisting of a coupler water seal valve assembly and a removable upper body to allow spring and key track to be serviced without shutdown of main. Lids shall be lockable vinyl with spring for positive closure on key removal.

2.4.4 Remote Control Valves, Electrical

Remote control valves shall be solenoid actuated globe valves of 3/4 to 3 inch size, suitable for 24 volts, 60 cycle, and designed to provide for shut-off in event of power failure. Valve shall be cast bronze or brass or plastic housing suitable for service at 150 psi operating pressure with external flow control adjustment for shut-off capability, external plug at diaphragm chamber to enable manual operation, filter in control chamber to prevent valve body clogging with debris, durable diaphragm, and accessibility to internal parts without removing valve from system.

2.4.5 Drain Valves

2.4.5.1 Manual Valves

Manual valves shall conform to requirements of MSS SP-80, Type 3, Class 150 threaded ends.

2.4.5.2 Automatic Valves

Automatic valves shall be brass or plastic, spring loaded ball drip type, 150 pounds and threaded ends, designed to close at 6 foot pressure head with positive seal at 3 psi pressure or greater and be open to drain at less than 3 psi pressure.

2.4.6 Pressure Regulating Master Valve

Pressure regulating master valve shall be automatic mechanical self-cleaning, self-purging control system having an adjustable pressure setting operated by a solenoid on alternating current with 0.70 amperes at 24 volts. Valve shall close slowly and be free of chatter in each diaphragm position, have manual flow stem to adjust closing speed and internal flushing, and one inlet tappings capable of being installed as a straight pattern valve. Body shall be cast bronze or brass with removable brass seat serviceable from top without removing valve body from system. Valve shall operate at 150 psi working pressure and pilot range from 10 to 125 psi.

2.4.7 Backflow Preventers

Reduced pressure principle assemblies shall be tested, approved, and listed in accordance with FCCHR-01. Reduced pressure principle backflow preventers shall be in accordance with ASSE 1013.

2.4.7.1 Reduced Pressure Type Backflow Preventers

Backflow preventers shall be 150 pound flanged brass mounted gate valve and strainer, 304 stainless steel or bronze, internal parts. Total pressure drop through complete assembly shall be a maximum of 10 psi at rated flow. Piping shall be red brass pipe and fittings. Strainers shall be bronze or brass construction with gasket caps. Units shall have 200-mesh stainless steel screen elements.

2.5 ACCESSORIES AND APPURTENANCES

2.5.1 Valve Keys for Manually Operated Valves

Valve keys shall be 1/2 inch diameter by 3 feet long, tee handles and keyed to fit valves.

2.5.2 Valve Boxes and Concrete Pads

2.5.2.1 Valve Boxes

Valve boxes shall be cast iron, plastic lockable, or precast concrete for each gate valve, manual control valve and remote control valve. Box sizes shall be adjustable for valve used. Word "IRRIGATION" shall be cast on cover. Shaft diameter of box shall be minimum 5-1/4 inches. Cast iron box shall have bituminous coating.

2.5.2.2 Concrete Pads

Concrete pads shall be precast or cast-in-place reinforced concrete construction for reduced pressure type backflow preventers.

2.5.3 Pressure Gauges

Pressure gauges shall conform to requirements of ASME B40.1, single style pressure gauge for water with 4-1/2 inchdial brass or aluminum case, bronze tube, gauge cock, pressure snubber, and siphon. Scale range shall be suitable for irrigation sprinkler systems.

2.5.4 Service Clamps

Service clamps shall be bronze flat, double strap, with neoprene gasket or "O"-ring seal.

2.6 AUTOMATIC CONTROLLERS, ELECTRICAL

Controller shall conform to the requirements of NEMA ICS 2 with 120-volt single phase service, operating with indicated stations, and grounded chassis. Enclosure shall conform to NEMA ICS 6 Type 3R, with locking hinged cover, wall-mounted. Controller shall have a minimum of 18 stations. Controller shall be programmable with the following features: watering times for each station set from 1 minute to 9 hours 59 minutes in one minute increments; water days for each program based on seven day week or a skip-by-day routine allowing program to skip from 1 to 30 days between watering; four (4) completely independent programs with four (4) minimum start times, for a total of 16 to 20 possible start times per day; percentage key to increase or decrease all station run times on a percentage basis in 1% increments from 0% to 300% or 5% to 300% by program; programmable rain shut down; rain sensor; flow sensoring; built-in remote control capability; a circuit breaker for surge protection; a non-volatile memory able to hold program(s) indefinitely during power outage or season shutdown. Acceptable manufacturers shall be RainMaster RME Hawk, Weathermatic Valcon, or approved equal.

2.7 ELECTRICAL WORK

Wiring and rigid conduit for electrical power shall be in accordance with NFPA 70, and Section 16375, ELECTRICAL DISTRIBUTION SYSTEM, UNDERGROUND.

2.8 CONCRETE MATERIALS

Concrete shall have a compressive strength of 2500 psi at 28 days as specified in Section 03300, CAST-IN-PLACE STRUCTURAL CONCRETE.

2.9 WATER SUPPLY MAIN MATERIALS

Tapping sleeves, service cut off valves, and connections to water supply mains shall be in accordance with Section 02660, WATER LINES.

2.10 INSULATING JOINTS

Insulating joints and dielectric fittings shall be in accordance with Section 02660, WATER LINES.

3 EXECUTION

3.1 INSTALLATION

Sprinkler system shall be installed after site grading has been completed. Excavation, trenching, and backfilling for sprinkler system shall be in accordance with the applicable provisions of Section 02222, EXCAVATION, TRENCHING, AND BACKFILLING FOR UTILITIES SYSTEMS, except as modified herein.

3.1.1 Trenching

Trench around roots shall be hand excavated to pipe grade when roots of 2 inches diameter or greater are encountered. Trench width shall be 4 inches minimum or 1-1/2 times diameter of pipe, whichever is wider. Backfill shall be hand tamped over excavation. When rock is encountered, trench shall be excavated 4 inchesdeeper and backfilled with silty sand (SM) or well-graded sand (SW) to pipe grade. Trenches shall be kept free of obstructions and debris that would damage pipe. Subsoil shall not be mixed with topsoil. Existing concrete walks, drives and other obstacles shall be bored at a depth conforming to bottom of adjacent trenches. Pipe sleeves for bored pipe shall be two pipe diameters larger than sprinkler pipe.

3.1.2 Piping System

3.1.2.1 Cover

Underground piping shall be installed as to meet the minimum depth of backfill cover specified.

3.1.2.2 Clearances

Minimum horizontal clearances between lines shall be 4 inches for pipe 2 inches and less; 12 inches for 2-1/2 inches and larger. Minimum vertical clearances between lines shall be 1 inch.

3.1.2.3 Minimum Slope

Minimum slope shall be 6 inches per 100 feet in direction of drain valves.

3.1.3 Piping Installation

3.1.3.1 Polyvinyl Chloride (PVC) Pipe

a. Solvent-cemented joints shall conform to the requirements of ASTM D 2855.

b. Threaded joints shall be full cut with a maximum of three threads remaining exposed on pipe and nipples. Threaded joints shall be made tight without recourse to wicks or fillers, other than polytetrafluoroethylene thread tape.

c. Piping shall be joined to conform with requirements of ASTM D 2774 or ASTM D 2855, and pipe manufacturer's instructions. Pipe shall be installed in a serpentine (snaked) manner to allow for expansion and contraction in trench before backfilling. Pipes shall be installed at temperatures over 40 degrees F.

3.1.3.2 Soldered Copper Tubing

Pipe shall be reamed and burrs removed. Contact surfaces of joint shall be cleaned and polished. Flux shall be applied to male and female ends. End of tube shall be inserted into fittings full depth of socket. After soldering, a solder bead shall show continuously around entire joint circumference. Excess acid flux shall be removed from tubings and fittings.

3.1.3.3 Threaded Brass or Galvanized Steel Pipe

Prior to installation, pipe shall be reamed. Threads shall be cut in conformance with ASME B1.2. Pipe joint compound shall be applied to male end only.

3.1.3.4 Insulating Joints

Insulating and dielectric fittings shall be provided where pipes of dissimilar metal are joined and at connections to water supply mains as shown. Installation shall be in accordance with Section 02660, WATER LINES.

3.1.4 Valves

3.1.4.1 Manual Valves

Valves shall be installed in a valve box extending from grade to below valve body, with a minimum of 4 inches cover measured from finish grade to top of valve stem.

3.1.4.2 Automatic Control Valves

Valve shall be set plumb in a valve box extending from grade to below valve body, with minimum of 4 inch cover measured from grade to top of valve. Install automatic valves beside sprinkler heads with a valve box.

3.1.4.3 Drain Valves

Entire system shall be manually drainable (and drainable by blowout from quick coupler valve). Low points of system shall be equipped with drain valve draining into an excavation containing 1 cubic foot gravel. Gravel shall be covered with building paper then backfilled with excavated material and 6 inches of topsoil.

3.1.5 Sprinklers and Quick Coupling Valves

Sprinklers and valves shall be installed plumb and level with terrain.

3.1.6 Control Wire and Conduit

3.1.6.1 Wires

Low voltage wires may be buried beside pipe in same trench. Rigid conduit shall be provided where wires run under paving. Wires shall be number tagged at key locations along main to facilitate service. One control circuit shall be provided for each zone and a circuit to control sprinkler system.

3.1.6.2 Loops

A 12 inch loop of wire shall be provided at each valve where controls are connected.

3.1.6.3 Expansion and Contraction

Multiple tubes or wires shall be bundled and taped together at [10] [20] foot intervals with 12 inch loop for expansion and contraction.

3.1.6.4 Splices

Electrical splices shall be waterproof.

3.1.7 Automatic Controller

Exact field location of controllers shall be determined before installation. Coordinate the electrical service to these locations. Install in accordance with manufacturer's recommendations and NFPA 70.

3.1.8 Thrust Blocks

Concrete shall be placed so that sides subject to thrust or load are against undisturbed earth, and valves and fittings are serviceable after concrete has set. Thrust blocks shall be as specified in Section 02660, WATER LINES.

3.1.9 Backfill

3.1.9.1 Minimum Cover

Depth of cover shall be 12 inches for 1-1/4 inch pipe or smaller; 18 inches for 1-1/2 to 2 inch pipe; 24 inches for 2-1/2 inch pipe or larger; 36 inches for pipes under traffic loads, farm operations, and freezing temperatures; and [12] [18] inches for low-voltage wires. Remainder of trench or pipe cover shall be filled to within 3 inches of top with excavated soil, and compact soil with plate hand-held compactors to same density as undisturbed adjacent soil.

3.1.9.2 Restoration

Top 3 inches shall be filled with topsoil and compacted with same density as surrounding soil. Lawns and plants shall be restored in accordance with Section 02935, TURF, and Section 02950, TREES, SHRUBS, GROUND COVERS AND VINES. Pavements shall be restored in accordance with Section 02551.

3.1.10 Adjustment

After grading, seeding, and rolling of planted areas, sprinkler heads shall be adjusted flush with finished grade. Adjustments shall be made by providing new nipples of proper length or by use of heads having an approved device, integral with head, which will permit adjustment in height of head without changing piping.

3.1.11 Disinfection

Sprinkler system fed from a potable water system shall be disinfected upstream of backflow preventer in accordance with Section 02660, WATER LINES.

3.1.12 Cleaning of Piping

Prior to the hydrostatic and operation tests, the interior of the pipe shall be flushed with clean water until pipe is free of all foreign materials. Flushing and cleaning out of system pipe, valves, and components shall not be considered completed until witnessed and accepted by Contracting Officer.

3.2 FIELD TESTS

All instruments, equipment, facilities, and labor required to conduct the tests shall be provided by Contractor.

3.2.1 Hydrostatic Pressure Test

Piping shall be tested hydrostatically before backfilling and proved tight at a hydrostatic pressure of 150 psi without pumping for a period of one hour with an allowable pressure drop of 5 psi. If hydrostatic pressure cannot be held for a minimum of 4 hours, Contractor shall make adjustments or replacements and the tests repeated until satisfactory results are achieved and accepted by the Contracting Officer.

3.2.2 Operation Test

At conclusion of pressure test, sprinkler heads or emitter heads, quick coupling assemblies, and hose valves shall be installed and entire system tested for operation under normal operating pressure. Operation test consists of the system operating through at least one complete programmed cycle for all areas to be sprinkled.

3.3 POSTING FRAMED INSTRUCTIONS

Framed instructions containing wiring and control diagrams under glass or in laminated plastic shall be posted where directed. Condensed operating instructions, prepared in typed form, shall be framed as specified above and posted beside the diagrams. The framed instructions shall be posted before acceptance testing of the system. After as-built drawings are approved by Contracting Officer, controller charts and programming schedule shall be prepared. One chart for each controller shall be supplied. Chart shall be a reduced drawing of actual as-built system that will fit the maximum dimensions inside controller housing. Black line print for chart and a different pastel or transparent color shall indicate each station area of coverage. After chart is completed and approved for final acceptance, chart shall be sealed between two 20 mil pieces of clear plastic.

3.4 FIELD TRAINING

A field training course shall be provided for designated operating and maintenance staff members. Training shall be provided for a total period of 4 hours of normal working time and shall start after the system is functionally complete but prior to final acceptance tests. Field training shall cover all of the items contained in the operating and maintenance manuals.

3.5 CLEANUP

Upon completion of installation of system, all debris and surplus materials resulting from the work shall be removed.

This page intentionally blank

SECTION 02935

TURF

1 GENERAL

1.1 REFERENCES

The publications listed below form a part of this specification to the extent referenced. The publications are referred to in the text by basic designation only.

AGRICULTURAL MARKETING SERVICE (AMS)

AMS-01	(Amended thru: Aug 1988) Federal Seed Act Regulations (Part 201-202)

AMERICAN SOCIETY FOR TESTING AND MATERIALS (ASTM)

ASTM D 977	(1991) Emulsified Asphalt
ASTM D 2028	(1976; R 1992) Cutback Asphalt (Rapid-Curing Type)
ASTM D 2607	(1969) Peats, Mosses, Humus, and Related Products

COMMERCIAL ITEM DESCRIPTIONS (CID)

CID A-A-1909	(Basic; Notice 1) Fertilizer

1.2 SUBMITTALS

Government approval is required for submittals with a "GA" designation; submittals having an "FIO" designation are for information only. The following shall be submitted in accordance with Section 01330 SUBMITTAL PROCEDURES:

SD-01 Data

Manufacturer's Literature; FIO.

Manufacturer's literature discussing physical characteristics, application and installation instructions for erosion control material, and for chemical treatment material.

SD-07 Schedules

Equipment List; GA.

A list of proposed pesticide application, seeding and mulching equipment to be used in performance of turfing operation, including descriptive data and calibration tests.

SD-08 Statements

Delivery; FIO.

Delivery schedule, at least 10 days prior to the intended date of the first delivery.

Application of Pesticide; GA.

Pesticide treatment plan with proposed sequence of pesticide treatment work. The pesticide trade name, chemical composition, formulation, concentration, application rate of active ingredients and method of application for all materials; and the name and state license number of the state certified applicator shall be included.

Maintenance Report; FIO.

Written record of maintenance work performed.

Turf Establishment Period; FIO.

Written calendar time period for the turf establishment period. When there is more than one turf establishment period, the boundaries of the turfed area covered for each period shall be described.

SD-13 Certificates

Certificates of compliance certifying that materials meet the requirements specified, prior to the delivery of materials. Certified copies of the reports for the following materials shall be included:

Seed; GA.

For mixture, percent pure live seed, minimum percent germination and hard seed, maximum percent weed seed content, date tested and state certification.

Fertilizer; GA.

For chemical analysis, composition percent.

Agricultural Limestone; GA.

For calcium carbonate equivalent and sieve analysis.

Pesticide Material; GA.

For EPA registration number and registered uses.

Topsoil; GA.

For pH, particle size, chemical analysis and mechanical analysis.

1.3 DELIVERY, INSPECTION, STORAGE, AND HANDLING

1.3.1 Delivery

1.3.1.1 Topsoil

A soil test shall be provided for topsoil delivered to the site.

1.3.1.2 Soil Amendments

Soil amendments shall be delivered to the site in the original, unopened containers bearing the manufacturer's chemical analysis. In lieu of containers, soil amendments may be furnished in bulk. A chemical analysis shall be provided for bulk deliveries.

1.3.1.3 Pesticide

Pesticide material shall be delivered to the site in the original, unopened containers bearing legible labels indicating the Environmental Protection Agency (EPA) registration number and the manufacturer's registered uses.

1.3.2 Inspection

Seed, sod and/or sprigs shall be inspected upon arrival at the job site by the Contracting Officer for conformity to type and quality in accordance with paragraph MATERIALS. Other materials shall be inspected for meeting specified requirements and unacceptable materials shall be removed from the job site.

1.3.3 Storage

Materials shall be stored in areas designated by the Contracting Officer. Seed, lime and fertilizer shall be stored in cool, dry locations away from contaminants. Chemical treatment materials shall not be stored with other landscape materials.

1.3.4 Handling

1.3.4.1 Materials

Except for bulk deliveries, materials shall not be dropped or dumped from vehicles.

2 PRODUCTS

2.1 MATERIALS

2.1.1 Seed

2.1.1.1 Seed Classification

State-certified seed of the latest season's crop shall be provided in original sealed packages bearing the producer's guaranteed analysis for percentages of mixture, purity, germination, hard seed, weed seed content, and inert material. Labels shall be in conformance with AMS-01 and applicable state seed laws.

2.1.1.2 Seed Mixtures

Seed mixtures shall be proportioned by weight as follows:

	Botanical Name	Common Name	Sowing Rate	% Pure Live Seed
Field Mix: (Temporary Cover)	Lolium perenne	Turf-type perennial ryegrass	1.5	86
	Festuca rubra var. rubra or commutata	Creeping red or chewings fescue	1.0	81
	Trifolium repens	White Dutch Clover	.1	89
			2.6 lb/1000 SF or 112 lb/acre	
Lawn Mix: (Permanent Turf)	Lolium perenne	Turf-type perennial ryegrass	4	86
	Festuca rubra var. rubra or commutata	Creeping red or chewings fescue	2	81
			6 lb/1000SF	

2.1.1.3 Seed Mixing

The field mixing of seed shall be performed on site in the presence of the Contracting Officer.

2.2 #.1 TOPSOIL

2.3 #.1 DELIVERED OR IMPORTED TOPSOIL

Topsoil shall be sandy loam as described by the USDA textural class and shall have a maximum particle size of 3/4 inch with a maximum of 2 percent retained on a 1/4 inch screen and a minimum of 5 percent passing through a 120 mesh screen. Topsoil shall contain 5-20 percent organic matter as determined by the organic carbon 6A chemical analysis method described in the USDA soil investigation report No. 1. Topsoil shall be obtained from well drained areas and shall not contain more than 5 percent water by volume. Topsoil shall be free from debris, noxious weeds, toxic substances

or any other material that may be harmful to plant growth. The pH shall be between 5.5 and 5.7. Soluble salts shall not exceed 600 ppm.

2.4 #.1 BERM MATERIAL

Fill material for berms shall be satisfactory excavated material from on-site as defined in specification Section 02210 Grading (EARTHWORK).

2.4.1 Soil Amendments

Soil amendments shall consist of lime and fertilizer meeting the following requirements.

2.4.1.1 Lime

Lime shall be agricultural limestone and shall have a minimum calcium carbonate equivalent of 90 percent and shall be ground to such a fineness that at least 90 percent will pass a 10-mesh sieve and at least 50 percent will pass a 60-mesh sieve.

2.4.1.2 Fertilizer

Fertilizer shall be commercial grade, free flowing, uniform in composition and conforming to CID A-A-1909. Granular Fertilizer: Consists of nitrogen-phosphorus-potassium ratio: 10 percent nitrogen 20 percent phosphorus, and 20 percent potassium. Consists of nitrogen carrier of 50% urea formaldehyde.

2.4.2 Mulch

Mulch shall be free from weeds, mold, and other deleterious materials.

2.4.2.1 Wood Cellulose Fiber

Wood cellulose fiber shall not contain any growth or germination-inhibiting factors and shall be dyed an appropriate color to facilitate visual metering during application. Composition on air-dry weight basis: 9 to 15 percent moisture, pH range from 4.5 to 6.0.

2.4.3 Water

Water shall not contain elements toxic to plant life.

2.4.4 Pesticide

Pesticide shall be insecticide, herbicide, fungicide, nematocide, rodenticide and miticide. For the purpose of this specification, soil fumigant shall have the same requirements as a pesticide. The pesticide material shall be EPA registered and approved insecticide, herbicide, fungicide, nematocide, rodenticide, miticide, and soil fumigant.

2.4.5 Erosion Control Material

2.4.5.1 Hydrophilic Colloids

Hydrophilic colloids shall be physiologically harmless to plant and animal life, without phytotoxic agents. Colloids shall be naturally occurring, silicate powder based, and shall form a water insoluble membrane after curing. Colloids must resist mold growth.

3 EXECUTION

3.1 SEEDING TIMES AND CONDITIONS

3.1.1 Seeding Time

Seed shall be sown from 1 April to 15 May for spring planting and from 15 Aug. to 30 Sept. for fall planting.

3.1.2 Turfing Conditions

Turf operations shall be performed only during periods when beneficial results can be obtained. When drought, excessive moisture or other unsatisfactory conditions prevail, the work shall be stopped when directed. When special conditions warrant a variance to the turf operations, proposed times shall be submitted to and approved by the Contracting Officer.

3.2 SITE PREPARATION

3.2.1 Grading

The Contracting Officer shall verify that finished grades are as indicated on drawings, and the placing of topsoil and the smooth grading has been completed in accordance with Section 02210 GRADING.

3.2.2 Topsoil and Topsoil Amendments

3.2.2.1 Topsoil

Topsoil as specified shall be applied to a minimum depth of 4 inches.

3.2.2.2 Lime

Lime shall be applied at the rate of 50 pounds per 1000 square feet. Lime shall be incorporated into the soil to a minimum depth of 4 inches or may be incorporated as part of the tillage operation.

3.2.2.3 Fertilizer

Fertilizer shall be applied at the rate of 6 pounds per 1000 square feet. Fertilizer may be incorporated as part of the tillage or hydroseeding operation.

3.2.3 Tillage

3.2.3.1 Minimum Depth

Subgrades on slopes gentler than 3-horizontal-to-1-vertical shall be tilled to a minimum depth of 4 inches. On slopes between 3-horizontal-to-1-vertical and 1-horizontal-to-1 vertical, the soil shall be tilled to a

minimum depth of 2 inches by scarifying with heavy rakes, or other method. Rototillers shall be used where soil conditions and length of slope permit. On slopes 1-horizontal-to-1 vertical and steeper, no tillage is required.

3.2.4 Finished Grading

3.2.4.1 Preparation

Turf areas shall be filled as needed or have surplus soil removed to attain the finished grade. Drainage patterns shall be maintained as indicated on drawings. Turf areas compacted by construction operations shall be completely pulverized by tillage. Soil used for repair of erosion or grade deficiencies shall conform to topsoil requirements specified in Section 02210 GRADING. Finished grade shall be 1 inch below the adjoining grade of any surfaced area. New surfaces shall be blended to existing areas.

3.2.4.2 Debris

Lawn areas shall have debris and stones larger than 1 inch in any dimension removed from the surface.

3.2.4.3 Protection

Finished graded areas shall be protected from damage by vehicular or pedestrian traffic and erosion.

3.3 SEEDING

3.3.1 General

Prior to seeding, any previously prepared seedbed areas compacted or damaged by interim rain, traffic or other cause, shall be reworked to restore the ground condition previously specified. Seeding operations shall not take place when the wind velocity will prevent uniform seed distribution.

3.3.2 Equipment Calibration

The equipment to be used and the methods of turfing shall be subject to the inspection and approval of the Contracting Officer prior to commencement of turfing operations. Immediately prior to the commencement of turfing operations, the Contractor shall conduct turfing equipment calibration tests in the presence of the Contracting Officer.

3.3.3 Applying Seed

3.3.4 Hydroseeding

Seed and fertilizer shall be added to water and thoroughly mixed at the rates specified. [Wood cellulose fiber mulch shall be added at the rates recommended by the manufacturer after the seed, fertilizer and water have been thoroughly mixed, to produce a homogeneous slurry.] Slurry shall be uniformly applied under pressure over the entire area. The hydroseeded area shall not be rolled.

3.3.5 Mulch

3.3.5.1 Non-Asphaltic Tackifier

Hydrophilic colloid shall be applied at rate recommended by manufacturer. Apply with hydraulic equipment suitable for mixing and applying uniform mixture of tackifier.

3.3.5.2 Wood Cellulose Fiber

Wood cellulose fiber mulch for use with the hydraulic application of seed and fertilizer shall be applied as part of the hydroseeding operation.

3.3.6 Water

Watering shall be started within 7 days after completing the seeded area. Water shall be applied at a rate sufficient to ensure moist soil conditions to a minimum depth of 1 inch. Run-off and puddling shall be prevented.

3.4 EROSION CONTROL

3.4.1 Temporary Turf Cover

3.4.1.1 General

When there are contract delays in the turfing operation or a quick cover is required to prevent erosion, the areas designated for turf shall be seeded with a temporary seed as directed by the Contracting Officer.

3.4.1.2 Application

When no other turfing materials have been applied, the quantity of one half of the required soil amendments shall be applied and the area tilled in accordance with paragraph SITE PREPARATION. Seed shall be uniformly broadcast and applied at the rate of 2.6 pounds per 1000 square feet. The area shall be watered as required.

3.5 APPLICATION OF PESTICIDE

When pesticide becomes necessary to remove a pest or disease, a state-certified applicator shall apply required pesticides in accordance with EPA label restrictions and recommendations. Hydraulic equipment shall be provided for the liquid application of pesticides with a leak-proof tank, positive agitation methods, controlled application pressure and metering gauges. A pesticide plan shall be provided to the Contracting Officer as stated in paragraph SUBMITTALS.

3.6 RESTORATION AND CLEAN UP

3.6.1 Restoration

Existing turf areas, pavements and facilities that have been damaged from the turfing operation shall be restored to original condition at Contractor's expense.

3.6.2 Clean Up

Excess and waste material shall be removed from the planting operation and shall be disposed of off the site. Adjacent paved areas shall be cleaned.

3.7 PROTECTION OF TURFED AREAS

Immediately after turfing, the area shall be protected against traffic or other use by erecting barricades and providing signage as required, or as directed by the Contracting Officer.

3.8 TURF ESTABLISHMENT PERIOD

3.8.1 Commencement

The Turf Establishment Period for establishing a healthy stand of turf shall begin on the first day of work under this contract and shall end three (3) months after the last day of turfing operations required by this contract. Written calendar time period shall be furnished to the Contracting Officer for the Turf Establishment Period. When there is more than one turf establishment period, describe the boundaries of the turfed area covered for each period.

3.8.2 Satisfactory Stand of Turf

3.8.2.1 Seeded Area

a. Lawn Area: A satisfactory stand of turf from the seeding operation for a lawn area is defined as a minimum of 15 grass plants per square foot. Bare spots shall be no larger than 6 inches square. The total bare spots shall not exceed 2 percent of the total seeded area.

3.8.3 Maintenance During Establishment Period

3.8.3.1 General

Maintenance of the turfed areas shall include eradicating weeds, eradicating insects and diseases, protecting embankments and ditches from erosion, maintaining erosion control materials and mulch, protecting turfed areas from traffic, mowing, watering, and post-fertilization.

3.8.3.2 Mowing

a. Lawn Areas: Lawn areas shall be mowed to a minimum height of 1 3/4 inches when the average height of the turf becomes 2 1/2 inches. Clippings shall be removed when the amount of cut turf is heavy enough to damage the turfed areas.

3.8.3.3 Watering

Watering shall be at intervals to obtain a moist soil condition to a minimum depth of 1 inch. Frequency of watering and quantity of water shall be adjusted in accordance with the growth of the turf. Run-off, puddling and wilting shall be prevented.

3.8.3.4 Post-Fertilization

Nitrogen carrier fertilizer shall be applied at the rate of 4 pounds per 1000 square feet after the first month and again in 3 months. The application shall be timed prior to the advent of winter dormancy and shall avoid excessively high nitrogen levels.

3.8.3.5 Pesticide

Treatment for disease or pest shall be in accordance with paragraph APPLICATION OF PESTICIDE.

3.8.3.6 Repair

The Contractor shall re-establish as specified herein, eroded, damaged or barren areas. Mulch shall also be repaired or replaced as required.

3.8.3.7 Maintenance Report

A written record shall be furnished to the Contracting Officer of the maintenance work performed.

3.9 FINAL ACCEPTANCE

3.9.1 Preliminary Inspection

Prior to the completion of the Turf Establishment Period, a preliminary inspection shall be held by the Contracting Officer. Time for the inspection shall be established in writing. The acceptability of the turf in accordance with the Turf Establishment Period shall be determined. An unacceptable stand of turf shall be repaired as soon as turfing conditions permit.

3.9.2 Final Inspection

A final inspection shall be held by the Contracting Officer to determine that deficiencies noted in the preliminary inspection have been corrected. Time for the inspection shall be established in writing.

This page intentionally blank

SECTION 02950

TREES, SHRUBS, GROUND COVERS, AND VINES

1 GENERAL

1.1 REFERENCES

The publications listed below form a part of this specification to the extent referenced. The publications are referred to in the text by basic designation only.

AMERICAN ASSOCIATION OF NURSERYMEN (AAN)

AAN-01	(1990) American Standard for Nursery Stock

AMERICAN SOCIETY FOR TESTING AND MATERIALS (ASTM)

ASTM D 2607	(1969) Peats, Mosses, Humus, and Related Products

COMMERCIAL ITEM DESCRIPTIONS (CID)

CID A-A-1909	(Basic; Notice 1) Fertilizer

1.2 SUBMITTALS

Government approval is required for submittals with a "GA" designation; submittals having an "FIO" designation are for information only. The following shall be submitted in accordance with Section 01330 SUBMITTAL PROCEDURES:

SD-01 Data

Edging Material; GA.

Manufacturer's literature discussing physical characteristics, application and installation instructions for edging material and erosion control material.

SD-07 Schedules

Application of Pesticide Material; FIO.

A list of the proposed pesticide application equipment to be used in performance of the planting work, including descriptive data and calibration tests.

SD-08 Statements

Delivery; FIO. Application of Pesticide Material; FIO.

The following work plans, before work is started.

a. Delivery Schedule at least 10 days prior to the intended date of the first delivery.

b. Pesticide Treatment Plan, giving proposed sequence of pesticide treatment work, before work is started. The pesticide trade name, chemical composition, formulation, concentration, application rate of active ingredients and methods of application for all materials furnished, and the name and state license number of the state certified applicator shall be included.

SD-09 Reports

Soil Test; GA.

Certified reports of inspections and laboratory tests, prepared by an independent testing agency, including analysis and interpretation of test results. Each report shall be properly identified. Test methods used and compliance with recognized test standards shall be described.

SD-13 Certificates

Topsoil; GA. Soil Amendments; GA. Plants; GA. Pesticide; GA.

Certificates of compliance certifying that materials meet the requirements specified, prior to the delivery of materials. Reports for the following materials shall be included.

a. Topsoil: For pH, chemical analysis, mechanical analysis and particle size.

b. Fertilizer: For chemical analysis and composition percent.

c. Agricultural Limestone: For sieve analysis and calcium carbonate equivalent.

d. Peat: For compliance with ASTM D 2607.

e. Plant Materials: For botanical and common name, size, quantity by species, grade, nursery grown.

f. Pesticide Material: For EPA registration number and registered uses.

SD-18 Records

Plant Establishment Period; FIO. Maintenance Report; FIO. Maintenance Instructions; GA.

a. Maintenance Report. Written record of maintenance work performed and quantity of plant losses and replacements.

b. Plant Establishment Period. Written calendar time period for the beginning of the plant establishment period. When there is more than one establishment period, the boundaries of the planted areas covered for each period shall be described.

c. Maintenance Instruction. Written instructions for year-round care of installed plants.

1.3 SOURCE INSPECTIONS

1.3.1 Plant Materials

Plant materials shall be subject to inspection at the growing site by the Contracting Officer.

1.3.2 Delivered Topsoil

The source of topsoil shall be subject to inspection by the Contracting Officer.

1.4 SHIPMENT, DELIVERY, INSPECTION, STORAGE, AND HANDLING

1.4.1 Shipment

1.4.1.1 Preparation

Digging and preparation for shipment shall be done in a manner that will not cause shock or damage to branches, trunk, or root systems.

a. Balled and Burlapped (BB) Plants: Ball size and ratio shall be provided as recommended by AAN-01. The ball shall be of a diameter and depth to encompass enough fibrous and feeding root system necessary for the full recovery of the plant. Removal shall be accomplished by hand digging or mechanical devices. Center the plant stem or trunk in the ball and clean cut all roots at the ball surface. No roots shall be pulled from the ground. The root ball shall be completely wrapped with burlap or other suitable material and securely laced with twine.

b. Container-Grown (C) Plants: Container size shall be provided as recommended by AAN-01. Plants shall be grown in a container sufficiently long for new fibrous roots to have developed and for root mass to retain its shape and hold together when removed from container. Container shall be sufficiently rigid to hold ball shape and protect root mass during shipping.

1.4.1.2 Antidesiccant Application

Plants shall be sprayed with an antidesiccant as leaf budding occurs or when plant material has soft growth.

1.4.2 Delivery

1.4.2.1 Identification

Plants shall be identified with durable waterproof labels and weather-resistant ink. Plants shall have attached labels stating the correct plant name and size.

1.4.2.2 Protection During Delivery

Plants shall be protected during delivery to prevent desiccation of the plant or damage to the roots or balls. Branches of plants shall be protected by tying-in the branches and covering all exposed branches.

1.4.2.3 Topsoil

A soil test shall be provided for topsoil delivered to the site.

1.4.2.4 Soil Amendments

Soil amendments shall be delivered to the site in the original, unopened containers bearing the manufacturer's chemical analysis. In lieu of containers, soil amendments may be furnished in bulk. A chemical analysis shall be provided for bulk deliveries.

1.4.2.5 Pesticide

Pesticide materials shall be delivered to the site in the original unopened containers bearing legible labels indicating the Environmental Protection Agency (EPA) registration numbers and the registered uses.

1.4.3 Inspection

Plant material shall be inspected upon arrival at the jobsite by the Contracting Officer for conformity to the paragraph PLANTS and paragraph Shipment, and any unacceptable plant material shall be removed from the jobsite.

1.4.4 Storage

1.4.4.1 Plant Storage

Plants not installed on the day of arrival at the site shall be stored and protected in areas designated by the Contracting Officer. Plants shall be protected from exposure to wind and shall be shaded from the sun. Covering that will allow air to circulate and prevent internal heat from building up shall be provided. Bare-root plants shall be heeled-in. All plants shall be kept in a moist condition by watering with a fine mist spray until planted.

1.4.4.2 Storage of Other Materials

Soil amendments shall be stored in dry locations away from contaminants. Pesticide materials shall not be stored with other landscape materials. Storage of materials shall be in areas designated or as approved by the Contracting Officer.

1.4.5 Handling

Care shall be taken to avoid injury to plants. Materials shall not be dropped from vehicles. Balled and burlapped plants shall be handled carefully to avoid cracking or breaking the earth ball and container-grown plants shall be handled by the container. Plants shall not be handled by the trunk or stems.

1.4.5.1 Time Limitation

a. Mulch: Limitation of time between installing plant and placing mulch is 48 hours.

b. Trunk Wrap: Limitation of time between installing deciduous trees and wrapping the trunks is 24 hours.

c. Transplanting Existing Plants: Limitation of time between digging and replanting existing plant material is one hour.

1.5 WARRANTY

Furnished plants shall be guaranteed to be in a vigorous growing condition for a period of 12 months regardless of the contract time period. A plant shall be replaced one time under this guarantee. Transplanted existing plants require no guarantee. A written calendar time period for the guarantee of plant growth shall be furnished to the Contracting Officer.

2 PRODUCTS

2.1 PLANTS

2.1.1 Varieties

Plants shall be nursery grown or plantation grown stock conforming to AAN-01 and shall be of the varieties specified in the plant list bearing botanical names listed in one or more of the publications listed under "Nomenclature" in AAN-01.

2.1.2 Substitutions

Substitutions will not be permitted without written request from the Contractor for approval by the Contracting Officer.

2.1.3 Growing Conditions

Plants shall be grown under climatic conditions similar to those in the locality of the project.

2.1.4 Quality

Well shaped, well grown, vigorous, healthy plants having healthy and well branched root systems shall be provided. Plants shall be provided free from disease, harmful insects and insect eggs, sun-scald injury, disfigurement and abrasion. Plants shall be provided that are typical of the species or variety and conforming to standards as set forth in AAN-01 and as specified herein.

2.1.4.1 Shade and Flowering Trees

A height relationship to caliper shall be provided as recommended by AAN-01. Height of branching should bear a relationship to the size and variety of tree specified and with the crown in good balance with the trunk. Trees shall not be "poled" or the leader removed.

a. Single stem: Trunk shall be reasonably straight and symmetrical with crown and have a persistent main leader.

b. Multi-stem: All countable stems, in aggregate, shall average the size specified. To be considered a stem, there should be no division of the trunk which branches more than six inches from ground level.

c. Specimen: A plant shall be provided that is well branched and pruned naturally according to the species. The form of growth desired, which may not be in accordance with natural growth habit, shall be as indicated.

2.1.4.2 Deciduous Shrub

Plants shall be provided that have the height and number of primary stems as recommended by AAN-01. An acceptable plant shall be well shaped with sufficient well-spaced side branches recognized by the trade as typical for the variety grown in the region.

2.1.4.3 Coniferous Evergreen

Trees shall be provided that have the height-to-spread ratio as recommended by AAN-01. Trees shall not be "poled" or the leader removed. An acceptable plant shall be exceptionally heavy, well shaped and trimmed to form a symmetrical and tightly knit plant. The form of growth desired shall be as indicated.

2.1.4.4 Broadleaf Evergreen

Plants shall be provided that have ratio of height-to-spread as recommended by AAN-01. An acceptable plant shall be well shaped and recognized by the trade as typical for the variety grown in the region.

2.1.4.5 Groundcovers and Vines

Plants shall be provided with the minimum number of runners and length of runner as recommended by AAN-01. Plants shall be furnished that have heavy, well developed and balanced top with vigorous well developed root system and shall be furnished in containers.

2.1.5 Size

Plants shall be furnished in sizes indicated. Plants larger in size than specified may be provided at no additional cost to the Government.

2.1.6 Measurement

Plant measurements shall be in accordance with AAN-01.

2.2 TOPSOIL

2.2.1 Delivered or Imported Topsoil

Topsoil shall be sandy loam as described by the USDA textural class and shall have a maximum particle size of 3/4 inch with a maximum of 2 percent retained on a 1/4 inch screen and a minimum of 5 percent passing through a

120 mesh screen. Topsoil shall contain 5-20 percent organic matter as determined by the organic carbon 6A chemical analysis method described in the USDA soil investigation report No. 1. Topsoil shall be obtained from well drained areas and shall not contain more than 5 percent water by volume. Topsoil shall be free from debris, noxious weeds, toxic substances or any other material that may be harmful to plant growth. The pH shall be between 5.5 and 5.7. Soluble salts shall not exceed 600 ppm.

2.3 #.1 BERM MATERIAL

Fill material for berms shall be satisfactory excavated material from on-site as defined in specification Section 02210 Grading (EARTHWORK).

2.4 SOIL AMENDMENTS

Soil amendments consist of lime, fertilizer, bonemeal, organic soil amendments and soil conditioner.

2.4.1 Lime

Lime shall be agricultural limestone and shall have a minimum calcium carbonate equivalent of 90 percent and shall be ground to such a fineness that at least 90 percent will pass a 10-mesh sieve and at least 50 percent will pass a 60-mesh sieve.

2.4.2 Fertilizer

Fertilizer shall be commercial grade, free flowing, uniform in composition and conforming to CID A-A-1909.

2.4.2.1 Dry Fertilizer

a. Granular fertilizer : Consists of nitrogen-phosphorous-potassium ratio: 16 percent nitrogen 8 percent phosphorous, and 8 percent potassium.

b. Controlled-Release Fertilizer: Consists of nitrogen-phosphorous-potassium ratio: 20 percent nitrogen 10 percent phosphorous, and 5 percent potassium. Controlled-release fertilizer may be in packet or tablet form.

2.4.3 Organic Soil Amendments

2.4.3.1 Peat

Peat shall be a natural product of hypnum moss peat derived from a bog, swampland or marsh and shall conform to ASTM D 2607.

2.4.3.2 Sand

Sand shall be clean and free of toxic materials and at least 95 percent by weight shall pass a 10-mesh sieve, and 10 percent by weight shall pass a 16-mesh sieve.

2.4.3.3 Rotted Manure

Rotted manure shall be unleached stable or cattle manure containing not more than 25 percent by volume of straw, sawdust, or other bedding materials and containing no chemicals or ingredients harmful to plants. The manure shall be heat treated to kill weed seeds and be free of stones, sticks, and soil.

2.4.3.4 Decomposed Wood Derivatives

Decomposed wood derivatives shall be ground bark, sawdust, or other wood waste material free of stones, sticks, and toxic substances harmful to plants and stabilized with nitrogen and having the following properties:

Particle size	Minimum percent by weight passing
No. 4 mesh screen	95
No. 8 mesh screen	80

Nitrogen Content	Minimum percent based on dry weight
Redwood Sawdust	0.5
Fir Sawdust	0.7
Fir or Pine Bark	1.0

2.4.4 Soil Conditioner

For single use or in combination to meet requirements for topsoil.

2.4.4.1 Gypsum

Gypsum shall be commercially packaged, free flowing, and a minimum of 95 percent calcium sulfate by volume.

2.4.4.2 Aluminum Sulfate

Aluminum sulfate shall be commercial grade.

2.5 MULCH

Mulch shall be free from weeds, mold and other deleterious materials. Organic mulch materials shall be two parts fir sawdust and one part manure free of stones, sticks and soil and stabilized with nitrogen.

2.6 TRUNK WRAPPING MATERIAL

Tree wrap shall be two thicknesses of crinkled paper cemented together with a layer of bituminous material. Wrapping material shall be a minimum of 4 inches in width and have a stretch factor of 33-1/3 percent. Twine for tying shall be lightly tarred medium or coarse sisal yarn.

2.7 GUYING AND STAKING MATERIAL

2.7.1 Stakes

Stakes for tree support shall be rough sawn wood, free from knots, rot, cross grain, or other defects that would impair the strength. Standard stakes shall be hardwood or fir treated with pentachlorophenol.

2.7.1.1 Bracing Stakes

Bracing stakes shall be a minimum of 2 inches by 2 inches or 2-1/2 inches in diameter by 8 feet long and pointed at one end.

2.7.2 Guying Material

2.7.2.1 Guying Wire

Guying wire shall be 12-gauge annealed galvanized steel wire.

2.7.3 Chafing Guard

Hose chafing guards shall be new or used 2-ply reinforced rubber or plastic hose and shall be all the same color on the project. Length shall be 1-1/2 times the circumference of the plant at its base.

2.7.4 Flags

Flags to be fastened to guys shall be white surveyor's plastic tape, 6 inches in length.

2.7.5 Turnbuckles

Turnbuckles shall be galvanized or cadmium-plated steel and have a 3-inch minimum lengthwise opening fitted with screw eyes.

2.8 EDGING MATERIAL

2.8.1 Aluminum

Aluminum edging shall be black electrostatically painted aluminum alloy 6061-T6 hardness, 5-1/2 inches deep by 3/16 inch thick in 16 foot lengths with horizontal undulations.

2.8.2 Anchors

Edging material anchors shall be as recommended by the manufacturer.

2.9 WATER

Water shall not contain elements toxic to plant life.

2.10 ANTIDESICCANT

Antidesiccant shall be an emulsion that will provide a film over plant surfaces permeable enough to permit transpiration, and shall not damage the plant.

2.11 PESTICIDE

Pesticide shall be insecticide, herbicide, fungicide, nematocide, rodenticide, and miticide. Pesticide material shall be labeled for use and applied only as registered by EPA and approved herbicide, insecticide, fungicide, nematocide, rodenticide, and miticide.

3 EXECUTION

3.1 EXAMINATION

3.1.1 Verify Grades

The Contracting Officer shall verify the finished grades are as indicated on drawings, and the placing of topsoil and smooth grading has been completed in accordance with Section 02210 GRADING.

3.1.2 Underground Obstructions to Planting

The location of underground utilities and facilities shall be verified. Damage to underground utilities and facilities shall be repaired at the Contractor's expense.

3.2 SITE PREPARATION

3.2.1 Layout

Plant material locations and bed outlines shall be staked on the project site before any excavation is made. Plant material locations may be adjusted by the Contracting Officer to meet field conditions.

3.2.2 Protection of Existing Vegetation

If lawns have been established prior to planting operations, the surrounding turf shall be covered before excavations are made in a manner that will protect turf areas. Existing trees, shrubbery, and beds that are to be preserved shall be barricaded in a manner that will effectively protect them during planting operations.

3.3 EXCAVATION

3.3.1 Obstructions Below Ground or Poor Drainage

When obstructions below ground or poor drainage affect the contract operation, proposed adjustments to plant location, type of plant and planting method or drainage correction shall be submitted to and approved by the Contracting Officer.

3.3.2 Turf Removal

Where planting beds occur in existing turf areas, the turf shall be removed to a depth that will ensure the removal of the entire root system.

3.3.3 Plant Pits

Plant pits shall be dug to produce vertical sides and flat, uncompacted bottoms. When pits are dug with an auger and the sides of the pits become

glazed, the glazed surface shall be scarified. The size of plant pits shall be as shown.

3.4 PLANTING TIMES AND CONDITIONS

3.4.1 Deciduous Planting Time

Install deciduous plants from March 1 to November 30.

3.4.2 Evergreen Planting Time

Install evergreen plants from March 1 to November 30.

3.4.3 Existing Plant Transplanting Time

Existing plants shall be transplanted from March 1 to April 15 and October 1 to November 30.

3.4.4 Planting Conditions

Planting operations shall be performed only during periods when beneficial results can be obtained. When drought, excessive moisture or other unsatisfactory conditions prevail, the work shall be stopped when directed. When special conditions warrant a variance to the planting operations, proposed planting times shall be submitted to and approved by the Contracting Officer.

3.5 INSTALLATION

3.5.1 Backfill Soil Mixture

The backfill soil mixture shall be 2/3 imported topsoil and 1/3 native soil.

Topsoil 65 percent to mixture.

3.5.2 Setting Plants

Plants shall be set plumb and held in position until sufficient soil has been firmly placed around roots or ball. Plants shall be set in relation to surrounding grade so that they are even with the depth at which they were grown in the nursery, or container.

3.5.3 Controlled-Release Fertilizer

Controlled-release fertilizer shall be placed in packet or tablet form in the plant pit in the immediate vicinity of the feeding roots in accordance with the manufacturer's recommendations.

3.5.4 Balled and Burlapped Plants

Materials shall be removed that are metal, plastic, nylon or treated burlap, prior to backfilling. Balled and burlapped stock shall be backfilled with backfill soil mixture to approximately half the depth of the ball and then tamped and watered. Biodegradable burlap and tying material shall be carefully opened and folded back. The backfill shall be completed, tamped and watered. A 4-inch high earth saucer shall be formed around individual plants.

3.5.5 Container-Grown, Balled and Platformed and Balled and Potted Plants

Non-biodegradable containers or platforms shall be removed without damage to the plant or root system. Biodegradable containers shall be split. The backfill shall be completed as specified for BB plants.

3.5.6 Groundcover and Shrub Bed

3.5.6.1 Planting Beds

When soil replacement is required, the existing soil shall be excavated and removed to a minimum depth of 6 inches and topsoil shall be placed on previously scarified subsoil to a minimum depth of 6 inches. The bed shall be brought to a smooth and even surface blending to existing areas. Settlement shall be allowed for.

3.5.6.2 Groundcover

Groundcover may be planted after the mulch is in place. Contaminating the mulch with soil shall be avoided.

3.5.7 Transplanting Existing Plants

Existing plant material to be transplanted shall be tagged on the site and/or as indicated. Existing plants shall be removed from the ground by means of mechanical devices or other method with a ball attached, meeting the requirements of paragraph SHIPMENT.

3.5.8 Staking and Guying

3.5.8.1 Deciduous Trees

Trees shall be held in place with two bracing stakes placed on opposite sides. The tree shall be held firmly between the stakes with a double strand of wire. Chafing guards shall be used where the wire contacts the tree. Bracing stakes shall be driven vertically into firm ground and shall not injure the ball or roots.

3.5.8.2 Evergreen Trees

Trees shall be held firmly in place with three guying lines of double strand wire spaced equidistantly around the tree. The line shall be anchored with ground stakes. The line shall be anchored to the tree at a point equal to one half its height. Chafing guards shall be used where the line contacts the tree. One turnbuckle shall be centered on each line for tree straightening purposes. Ground stakes shall be driven into firm ground outside the earth saucer and plant pit with the top of the stake flush with the ground surface.

3.5.9 Flags

A flag shall be securely fastened to each guying line to be visible by pedestrians.

3.5.10 Edging Material

Edging material shall be installed in accordance with the manufacturer's recommendations and/or as indicated.

3.6 FINISHING

3.6.1 Plant Beds

Planted areas shall be uniformly edged to provide a clear-cut division line between the planted area and the adjacent turf area and to provide a shape as indicated. The entire planted area shall be raked and smoothed while maintaining the earth saucers.

3.6.2 Pruning

Installed trees and shrubs shall be pruned to remove dead, broken or crossing branches only. The typical growth habit of individual plants shall be retained. Clean cuts shall be made flush with the parent trunk. Improper cuts, stubs, dead and broken branches shall be removed. "Headback" cuts at right angles to the line of growth shall not be permitted. Trees shall not be poled or the leader removed, nor shall the leader be pruned or "topped off."

3.6.3 Mulch

Mulch shall be spread to a uniform thickness of 2 inches within 48 hours after planting. Mulch shall be kept out of the crowns of shrubs and off buildings, sidewalks and other facilities.

3.6.4 Geotextile

When required for weed control, geotextile shall be placed in accordance with the manufacturer's recommendations and/or as indicated.

3.6.5 Trunk Wrap

The trunks to deciduous trees shall be wrapped within 24 hours after planting. Trees 1-1/2 inches or greater in caliper shall be wrapped with the specified material beginning at the base and extending up to the first branches. The wrapping shall be securely tied with twine at the top and bottom and at 18-inch intervals.

3.6.6 Water

Plants shall be watered as necessary to maintain an adequate supply of moisture within the root zone. Run-off, puddling and wilting shall be prevented.

3.6.7 Antidesiccant Application

Plants requiring further protection shall be sprayed with anti-desiccant in accordance with manufacturer's recommendations.

3.7 MAINTENANCE DURING PLANTING OPERATION

Installed plants shall be maintained in a healthy growing condition. Maintenance operations shall begin immediately after each plant is installed and shall continue until the plant establishment period commences. The maintenance includes watering, pruning, wound dressing, straightening and other necessary operations. Plant beds and earth saucers shall be kept free of weeds, grass and other undesired vegetation. Plants shall be checked for settlement and shall be reset proper grade as necessary. Run-off, puddling and wilting shall be prevented.

3.8 APPLICATION OF PESTICIDE MATERIAL

When pesticide becomes necessary to remove a disease or pest, a state-certified applicator shall apply required pesticide in accordance with State EPA label restrictions and recommendations. Hydraulic equipment shall be provided for the liquid application of pesticides with a leak-proof tank, positive agitation methods, controlled application pressure and metering gauges. A pesticide treatment plan shall be provided to the Contracting Officer as specified in paragraph SUBMITTALS.

3.9 RESTORATION AND CLEAN UP

3.9.1 Restoration

Turf areas, pavements and facilities that have been damaged from the planting operation shall be restored to original condition at the Contractor's expense.

3.9.2 Clean Up

Excess and waste material from the planting operation shall be removed and disposed of off the site. Adjacent paved areas shall be cleared.

3.10 PLANT ESTABLISHMENT PERIOD

3.10.1 Commencement

On completion of the last day of the planting operation, the plant establishment period for maintaining installed plants in a healthy growing condition shall commence and shall be in effect for the remaining contract time period not to exceed 12 months. When the planting operation extends over more than one season or there is a variance to the planting times, plant establishment periods shall be established for the work completed, as directed. Written calendar time period shall be furnished to the Contracting Officer for the beginning of the plant establishment period. When there is more than one plant establishment period, describe the boundaries of the planted area covered for each period.

3.10.2 Maintenance During Establishment Period

3.10.2.1 General

Maintenance of plants shall include straightening plants, tightening stakes and guying material, repairing tree wrapping, protecting plant areas from erosion, maintaining erosion control material, supplementing mulch, accomplishing wound dressing, removing dead or broken tip growth by pruning,

maintaining edging of beds, checking for girdling of plants and maintaining plant labels, watering, weeding, removing and replacing unhealthy plants.

3.10.2.2 Water

The plants shall be watered as necessary to maintain an adequate supply of moisture within the root zone. An adequate supply of moisture is estimated to be the equivalent of one inch of absorbed water per week delivered in the form of natural rain or augmented as required by periodic waterings. Run-off, puddling and wilting shall be prevented.

3.10.2.3 Weeding

Grass and weeds in earth saucers and plant beds shall not be allowed to reach a height of 3 inches before being completely removed, including the root growth.

3.10.2.4 Unhealthy Plants

A plant shall be considered unhealthy or dead when the main leader has died back, or 25 percent of the crown is dead. Determine the cause for an unhealthy plant. Unhealthy or dead plants shall be removed immediately and shall be replaced as soon as seasonal conditions permit.

3.10.2.5 Fertilizing

The plants shall be topdressed at least once during the period of establishment with dry fertilizer at the rate of 1 pound per 100 square feet of plant pit or bed area or foliar feed plants with liquid fertilizer. Dry fertilizer adhering to plants shall be flushed off. The application shall be timed prior to the advent of winter dormancy.

3.10.2.6 Settlement

Topsoil shall be added to maintain grade and to maintain earth saucers. Serious settlement affecting the setting of the plant in relation to the depth at which it was grown requires replanting in accordance with paragraph INSTALLATION.

3.10.2.7 Pesticide Treatment

Treatment for diseases or pest shall be in accordance with paragraph APPLICATION OF PESTICIDE MATERIAL.

3.10.2.8 Maintenance Report

A written record shall be furnished to the Contracting Officer of the maintenance work performed, the quality of plant losses, cause for plant loss and replacements made on each site visit.

3.10.2.9 Maintenance Instructions

Written instructions shall be furnished to the Contracting Officer for year-round care of installed plants.

3.10.3 Replacement Plants

Plants shall be provided for replacement in accordance with paragraph PLANTS. Replacement plants shall be installed in accordance with paragraph INSTALLATION. No extended plant establishment period Shall be required for replacement plants. A plant will be replaced in accordance with paragraph WARRANTY.

3.11 FINAL ACCEPTANCE

3.11.1 Preliminary Inspection

Prior to the plant establishment period a preliminary inspection shall be held by the Contracting Officer. Time for the inspection will be established in writing. The quantity and type of plants installed and the acceptability of the plants in accordance with the plant establishment period shall be determined.

3.11.2 Final Inspection

A final inspection shall be held by the Contracting Officer to determine that deficiencies noted in the preliminary inspection have been corrected. Time for the inspection shall be established in writing. Acceptance of the planting operation is subject to the guarantee of plant growth.

SECTION 03100

STRUCTURAL CONCRETE FORMWORK

1 GENERAL

1.1 REFERENCES

The publications listed below form a part of this specification to the extent referenced. The publications are referred to in the text by basic designation only.

AMERICAN CONCRETE INSTITUTE (ACI)

ACI 347R (1994) Guide to Formwork for Concrete

AMERICAN HARDBOARD ASSOCIATION (AHA)

AHA A135.4 (1995) Basic Hardboard

DEPARTMENT OF COMMERCE (DOC)

DOC PS 1 (1983) Construction and Industrial Plywood

1.2 SUBMITTALS

Government approval is required for submittals with a "GA" designation; submittals having an "FIO" designation are for information only. The following shall be submitted in accordance with Section 01330 SUBMITTAL PROCEDURES:

SD-01 Data

Design; FIO.

Design analysis and calculations for form design and methodology used in the design.

Concrete Formwork; FIO.

Manufacturer's data including literature describing form materials, accessories, and form releasing agents.

SD-04 Drawings

Concrete Formwork; GA.

Drawings showing details of formwork including, dimensions of fiber voids, joints, supports, studding and shoring, and sequence of form and shoring removal.

SD-06 Instructions

Form Releasing Agents; GA.

Manufacturer's recommendation on method and rate of application of form releasing agents.

1.3 DESIGN

Formwork shall be designed in accordance with methodology of ACI 347R for anticipated loads, lateral pressures, and stresses. Forms shall be capable of producing a surface which meets the requirements of the class of finish specified in Section 03300 CONCRETE FOR BUILDING CONSTRUCTION. Forms shall be capable of withstanding the pressures resulting from placement and vibration of concrete.

2 PRODUCTS

2.1 FORM MATERIALS

2.1.1 Forms For Class A and Class B Finish

Forms for Class A and Class B finished surfaces shall be plywood panels conforming to DOC PS 1, Grade B-B concrete form panels, Class I or II. Other form materials or liners may be used provided the smoothness and appearance of concrete produced will be equivalent to that produced by the plywood concrete form panels. Forms for round columns shall be the prefabricated seamless type.

2.1.2 Forms For Class C Finish

Forms for Class C finished surfaces shall be shiplap lumber; plywood conforming to DOC PS 1, Grade B-B concrete form panels, Class I or II; tempered concrete form hardboard conforming to AHA A135.4; other approved concrete form material; or steel, except that steel lining on wood sheathing shall not be used.

2.1.3 Forms For Class D Finish

Forms for Class D finished surfaces, except where concrete is placed against earth, shall be wood or steel or other approved concrete form material.

2.1.4 Form Ties

Form ties shall be factory-fabricated metal ties, shall be of the removable or internal disconnecting or snap-off type, and shall be of a design that will not permit form deflection and will not spall concrete upon removal. Solid backing shall be provided for each tie. Except where removable tie rods are used, ties shall not leave holes in the concrete surface less than 1/4 inch nor more than 1 inch deep and not more than 1 inch in diameter. Removable tie rods shall be not more than 1-1/2 inches in diameter.

2.1.5 Form Releasing Agents

Form releasing agents shall be commercial formulations that will not bond with, stain or adversely affect concrete surfaces. Agents shall not impair subsequent treatment of concrete surfaces depending upon bond or adhesion nor impede the wetting of surfaces to be cured with water or curing compounds.

3 EXECUTION

3.1 INSTALLATION

3.1.1 Formwork

Forms shall be mortar tight, properly aligned and adequately supported to produce concrete surfaces meeting the surface requirements specified in Section 03300 CONCRETE FOR BUILDING CONSTRUCTION and conforming to construction tolerance given in TABLE 1. Where concrete surfaces are to have a Class A or Class B finish, joints in form panels shall be arranged as approved. Where forms for continuous surfaces are placed in successive units, care shall be taken to fit the forms over the completed surface so as to obtain accurate alignment of the surface and to prevent leakage of mortar. Forms shall not be reused if there is any evidence of surface wear and tear or defects which would impair the quality of the surface. Surfaces of forms to be reused shall be cleaned of mortar from previous concreting and of all other foreign material before reuse. Form ties that are to be completely withdrawn shall be coated with a nonstaining bond breaker.

3.2 CHAMFERING

Except as otherwise shown, external corners that will be exposed shall be chamfered, beveled, or rounded by moldings placed in the forms.

3.3 COATING

Forms for Class A and Class B finished surfaces shall be coated with a form releasing agent before the form or reinforcement is placed in final position. The coating shall be used as recommended in the manufacturer's printed or written instructions. Forms for Class C and D finished surfaces may be wet with water in lieu of coating immediately before placing concrete, except that in cold weather with probable freezing temperatures coating shall be mandatory. Surplus coating on form surfaces and coating on reinforcing steel and construction joints shall be removed before placing concrete.

3.4 REMOVAL OF FORMS

Forms shall be removed in a manner that will prevent injury to the concrete and ensure the complete safety of the structure. Formwork for columns, walls, side of beams and other parts not supporting the weight of concrete may be removed when the concrete has attained sufficient strength to resist damage from the removal operation but not before at least 24 hours has elapsed since concrete placement. Supporting forms and shores shall not be removed from beams, floors and walls until the structural units are strong enough to carry their own weight and any other construction or natural loads. In no case will supporting forms or shores be removed before the concrete strength has reached 70 percent of design strengths as determined by field cured cylinders or other approved methods. This strength shall be demonstrated by job-cured test specimens, and by a structural analysis considering the proposed loads in relation to these test strengths and the strength of forming and shoring system. The job-cured test specimens for form removal purposes shall be provided in numbers as directed and shall be in addition to those required for concrete quality control. The specimens shall be removed from molds at the age of 24 hours and shall receive,

insofar as possible, the same curing and protection as the structures they represent.

3.5 FOUNDATIONS

Concrete for footings may be placed in excavations without forms, upon inspection and approval by the Contracting Officer. Excavation width shall be a minimum of 3" greater than indicated. Stem walls, grade beams and retaining wall sides shall be formed.

TABLE 1

TOLERANCES FOR FORMED SURFACES

1. Variations from the plumb:	In any 10 feet of length ----- 1/4 inch
a. In the lines and surfaces of columns, piers, walls and in arises	Maximum for entire length ----- 1 inch
b. For exposed corner columns, control-joint grooves, and other conspicuous lines	In any 20 feet of length ----- 1/4 inch Maximum for entire length ---- 1/2 inch
2. Variation from the level or from the grades indicated on the drawings:	In any 10 feet of length ----- 1/4 inch In any bay or in any 20 feet of length ---------- 3/8 inch
a. In slab soffits, ceilings, beam soffits, and in arises, measured before removal of supporting shores	Maximum for entire length ---- 3/4 inch
b. In exposed lintels, sills, parapets, horizontal grooves, and other conspicuous lines	In any bay or in any 20 feet of length ---------- 1/4 inch Maximum for entire length ---- 1/2 inch
3. Variation of the linear building lines from established position in plan	In any 20 feet ---------- 1/2 inch Maximum ---------- 1 inch
4. Variation of distance between walls, columns, partitions	1/4 inch per 10 feet of distance, but not more than 1/2 inch in any one bay, and not more than 1 inch total variation
5. Variation in the sizes and locations of sleeves, floor openings, and wall opening	Minus ---------- 1/4 inch Plus ---------- 1/2 inch
6. Variation in cross-sectional dimensions of columns and beams and in the thickness of slabs and walls	Minus ---------- 1/4 inch Plus ---------- 1/2 inch

7. Footings:

a. Variation of dimensions in plan — Minus ---------- 1/2 inch
Plus ---------- 2 inches when formed or plus 3 inches when placed against unformed excavation

b. Misplacement of eccentricity — 2 percent of the footing width in the direction of misplacement but not more than ---------- 2 inches

c. Reduction in thickness — Minus ---------- 5 percent of specified thickness

8. Variation in steps:

a. In a flight of stairs — Riser ---------- 1/8 inch
Tread ---------- 1/4 inch

b. In consecutive steps — Riser ---------- 1/16 inch
Tread ---------- 1/8 inch

This page intentionally blank

SECTION 03200

CONCRETE REINFORCEMENT

1 GENERAL

1.1 REFERENCES

The publications listed below form a part of this specification to the extent referenced. The publications are referred to in the text by basic designation only.

AMERICAN CONCRETE INSTITUTE (ACI)

ACI 117	(1990; Errata) Standard Tolerances for Concrete Constuction and Materials
ACI 318/318R	(1995) Building Code Requirements for Reinforced Concrete

AMERICAN SOCIETY FOR TESTING AND MATERIALS (ASTM)

ASTM A 53	(1996) Pipe, Steel, Black and Hot-Dipped, Zinc-Coated Welded and Seamless
ASTM A 82	(1995a) Steel Wire, Plain, for Concrete Reinforcement
ASTM A 184	(1996) Fabricated Deformed Steel Bar Mats for Concrete Reinforcement
ASTM A 185	(1994) Steel Welded Wire Fabric, Plain, for Concrete Reinforcement
ASTM A 497	(1995) Steel Welded Wire Fabric, Deformed, for Concrete Reinforcement
ASTM A 499	(1989) Steel Bars and Shapes, Carbon Rolled from "T" Rails
ASTM A 615	(1996a) Deformed and Plain Billet-Steel Bars for Concrete Reinforcement
ASTM A 675	(1990a; Rev. 1995) Steel Bars, Carbon, Hot-Wrought, Special Quality, Mechanical Properties
ASTM A 706	(1995b) Low-Alloy Steel Deformed Bars for Concrete Reinforcement
ASTM C 1116	(1991) Fiber-Reinforced Concrete and Shotcrete

AMERICAN WELDING SOCIETY (AWS)

AWS D1.4	(1992) Structural Welding Code - Reinforcing Steel

CONCRETE REINFORCING STEEL INSTITUTE (CRSI)

CRSI MSP-1	(1996) Manual of Standard Practice
Engineering Data Report #36	CRSI "Field Inspection of Rebar"

1.2 SUBMITTALS

Government approval is required for submittals with a "GA" designation; submittals having an "FIO" designation are for information only. The following shall be submitted in accordance with Section 01330 SUBMITTAL PROCEDURES:

SD-04 Drawings

Concrete Reinforcement System; GA.

Detail drawings showing reinforcing steel schedules, sizes, grades, and splicing and bending details. Drawings shall show support details including types, sizes and spacing. Drawings shall conform to detailing and placing drawing recommendations of CRSI MSP-1.

SD-08 Statements

Welder's Qualifications; FIO.

A list of names of qualified welders.

SD-13 Certificates

Reinforcing Steel; FIO.

Certified copies of mill reports attesting that the reinforcing steel furnished meets the requirements specified, prior to the installation of reinforcing steel.

1.3 QUALIFICATIONS

Welders shall be qualified in accordance with AWS D1.4. Qualification test shall be performed at the worksite and the Contractor shall notify the Contracting Officer 24 hours prior to conducting tests. Special welding procedures and welders qualified by others may be accepted as permitted by AWS D1.4.

1.4 DELIVERY AND STORAGE

Reinforcement and accessories shall be stored off the ground on platforms, skids, or other supports.

2 PRODUCTS

2.1 SMOOTH DOWELS

Smooth dowels shall conform to ASTM A 675, Grade 80, or ASTM A 499. Steel pipe conforming to ASTM A 53, Schedule 80, may be used as dowels provided the ends are closed with metal or plastic inserts or with mortar.

2.2 FABRICATED BAR MATS

Fabricated bar mats shall conform to ASTM A 184.

2.3 REINFORCING STEEL

Reinforcing steel shall be deformed bars conforming to ASTM A 615 or ASTM A 706, grades and sizes as indicated. Cold drawn wire used for spiral reinforcement shall conform to ASTM A 82.

2.4 WELDED WIRE FABRIC

Welded wire fabric shall conform to ASTM A 185 or ASTM A 497.

2.5 WIRE TIES

Wire ties shall be 16 gauge or heavier black annealed steel wire.

2.6 SUPPORTS

Bar supports for formed surfaces shall be designed and fabricated in accordance with CRSI MSP-1 and shall be steel or precast concrete blocks. Precast concrete blocks shall have wire ties and shall be not less than 4 inches square when supporting reinforcement on ground. Precast concrete block shall have compressive strength equal to that of the surrounding concrete. Where concrete formed surfaces will be exposed to weather or where surfaces are to be painted, steel supports within 1/2 inch of concrete surface shall be galvanized, plastic protected or of stainless steel. Concrete supports used in concrete exposed to view shall have the same color and texture as the finish surface. For slabs on grade, supports shall be precast concrete blocks, plastic coated steel fabricated with bearing plates, or specifically designed wire-fabric supports fabricated of plastic.

2.7 SYNTHETIC FIBER REINFORCEMENT

Synthetic fiber where used shall be per Section 03300, "Concrete for Building Construction."

3 EXECUTION

3.1 REINFORCEMENT

Reinforcement shall be fabricated to shapes and dimensions shown and shall conform to the requirements of ACI 318/318R. Reinforcement shall be cold bent unless otherwise authorized. Bending may be accomplished in the field or at the mill. There shall be no field bending of reinforcing after embedment in concrete without prior approval by the Contracting Officer. Safety caps shall be placed on all exposed ends of vertical concrete reinforcement bars that pose a danger to life safety. Wire tie ends shall

face away from the forms. "Tack" welding to, or of, reinforcement is prohibited. Welding of reinforcing bars shall be done with low hydrogen electrodes in accordance with AWS D1.4.

3.1.1 Placement

Reinforcement shall be free from loose rust and scale, dirt, oil, or other deleterious coating that could reduce bond with the concrete. Reinforcement shall be placed in accordance with ACI 318/318R at locations shown within tolerances of ACI 117. Reinforcement shall not be continuous through expansion joints and shall be as indicated through construction or shrinkage control joints. Concrete coverage shall be as indicated or as required by ACI 318/318R. If bars are moved more than one bar diameter to avoid interference with other reinforcement, conduits or embedded items, the resulting arrangement of bars, including additional bars required to meet structural requirements, shall be approved before concrete is placed.

3.1.2 Splicing

Splices of reinforcement shall conform to ACI 318/318R and shall be made only as required or indicated. Splicing shall be by lapping or by mechanical or welded butt connection; except that lap splices shall not be used for bars No. 11 and larger unless otherwise indicated. Welding shall conform to AWS D1.4. Welded butt splices shall be full penetration butt welds. Lapped bars shall be placed in contact and securely tied or spaced transversely apart to permit the embedment of the entire surface of each bar in concrete. Lapped bars shall not be spaced farther apart than one-fifth the required length of lap or 6 inches.Mechanical butt splices shall be in accordance with the recommendation of the manufacturer of the mechanical splicing device. Butt splices shall develop 125 percent of the specified minimum yield tensile strength of the spliced bars or of the smaller bar in transition splices. Bars shall be flame dried before butt splicing. Adequate jigs and clamps or other devices shall be provided to support, align, and hold the longitudinal centerline of the bars to be butt spliced in a straight line.

3.2 WELDED-WIRE FABRIC

Welded-wire fabric shall be placed in slabs as indicated. Fabric placed in slabs on grade shall be continuous between expansion, construction, and shrinkage control joints. Fabric placement at joints shall be as indicated. Lap splices shall be made in such a way that the overlapped area equals the distance between the outermost crosswires plus 2 inches, 9 inch minimum. Laps shall be staggered to avoid continuous laps in either direction. Fabric shall be wired or clipped together at laps at intervals not to exceed 4 feet. Fabric shall be positioned by the use of supports.

3.3 SMOOTH DOWELS

Smooth dowels shall be installed in slabs on grade at locations indicated and at right angles to joint being doweled. Dowels shall be accurately positioned and aligned parallel to the finished concrete surface before concrete placement. Dowels shall be rigidly supported during concrete placement. One end of dowels shall be coated with a bond breaker.

3.4 FIELD INSPECTION

Inspect placement of all rebar, welding and installation of mechanical connectors per CRSI Engineering Data Report #36.

This page intentionally blank

SECTION 03250

ISOLATION JOINTS, SHRINKAGE CONTROL JOINTS, AND WATERSTOPS

1 GENERAL

1.1 REFERENCES

The publications listed below form a part of this specification to the extent referenced. The publications are referred to in the text by basic designation only.

AMERICAN CONCRETE INSTITUTE (ACI)

ACI 302.1R	(1996) Concrete Floor and Slab Construction

AMERICAN HARDBOARD ASSOCIATION (AHA)

AHA A 135.4	(1995) Basic Hardboard

AMERICAN SOCIETY FOR TESTING AND MATERIALS (ASTM)

ASTM C 920	(1994) Elastomeric Joint Sealants
ASTM D 1190	(1994) Concrete Joint Sealer, Hot Poured Elastic Type
ASTM D 1751	(1994) Preformed Expansion Joint Filler for Concrete Paving and Structural Construction (Nonextruding and Resilient Bituminous Types)
ASTM D 1752	(1984; R 1992) Preformed Sponge Rubber and Cork Expansion Joint Fillers for Concrete Paving and Structural Construction
ASTM D 1850	(1974; R 1979) Concrete Joint Sealer, Cold Application Type
ASTM D 2628	(1991) Preformed Polychloroprene Elastomeric Joint Seals for Concrete Pavements
ASTM D 2835	(1989; Rev. 1993) Lubricant for Installation of Preformed Compression Seals in Concrete Pavements

CORPS OF ENGINEERS (COE)

COE CRD-C 513	(1974) Corps of Engineers Specifications for Rubber Waterstops
COE CRD-C 572	(1974) Corps of Engineers Specifications for Polyvinylchloride Waterstops

FEDERAL SPECIFICATIONS (FS)

FS SS-S-200	(Rev E; Am 1) Sealants, Joint, Two-Component, Jet-Blast-Resistant, Cold-Applied, for Portland Cement Concrete Pavement
FS SS-S-1401	(Rev C; Notice 1) Sealant, Joint, Non-Jet-Fuel-Resistant, Hot-Applied, for Portland Cement and Asphalt Concrete Pavements
FS SS-S-1614	(Rev A; Notice 1) Sealants, Joint, Jet-Fuel-Resistant, Hot-Applied, for Portland Cement and Tar Concrete Pavements

1.2 SUBMITTALS

Government approval is required for submittals with a "GA" designation; submittals having an "FIO" designation are for information only. The following shall be submitted in accordance with Section 01330 SUBMITTAL PROCEDURES:

SD-01 Data

Materials; FIO.

Manufacturer's catalog data and manufacturer's recommended instructions for splicing of waterstops.

SD-13 Certificates

Materials; FIO.

Certificates of compliance stating that the joint filler and sealant materials and waterstops conform to the requirements specified.

1.3 DELIVERY AND STORAGE

Material delivered and placed in storage shall be stored off the ground and protected from moisture, dirt, and other contaminants. Sealants shall be delivered in the manufacturer's original unopened containers. Sealants whose shelf life has expired shall be removed from the site.

2 PRODUCTS

2.1 SHRINKAGE CONTROL-JOINT STRIPS

Shrinkage control-joint strips shall be 1/8-inchthick tempered hardboard conforming to AHA A 135.4, Class 1. In lieu of hardboard strips, rigid polyvinylchloride (PVC) insert strips specifically designed to induce controlled cracking in slabs on grade may be used. Such insert strips shall have removable top section.

2.2 ISOLATION-JOINT FILLER

Isolation-joint filler shall be premolded material conforming to ASTM D 1751 or ASTM D 1752. Unless otherwise indicated, filler material shall be 3/8-inch thick and of a width applicable for the joint formed.

2.3 JOINT SEALANT

Joint sealant shall conform to the following:

2.3.1 Preformed Polychloroprene Elastomeric Joint Seals

ASTM D 2628.

2.3.2 Lubricant for Installation of Preformed Compression Seals

ASTM D 2835.

2.3.3 Horizontal Surfaces, (3 Percent Slope, Maximum)

ASTM D 1190 or ASTM C 920, Type M, Class 25, Use T, except that ASTM D 1850 may be used inside buildings.

2.3.4 Vertical Surfaces (Greater Than 3 Percent Slope)

ASTM C 920, Type M, Grade NS, Class 25, Use T.

2.4 WATERSTOPS

Waterstops shall conform to COE CRD-C 513 or COE CRD-C 572.

3 EXECUTION

3.1 JOINTS

Joints shall be installed at locations indicated and as authorized and according to the recommendations of ACI 302.1R.

3.1.1 Shrinkage Control Joints

Shrinkage control joints may be constructed by inserting tempered hardboard strips or rigid PVC insert strips into the plastic concrete or by cutting the concrete with a saw after concrete has set. Joints shall be approximately 1/8-inch wide and shall extend into the slab approximately one-fourth the slab thickness but not less than 1 inch. Where slabs will not be covered, the joints shall be hand tooled with an edging tool of 1/8" radius.

3.1.1.1 Joint Strips

Strips shall be of the required dimensions and as long as practicable. After the first floating, the concrete shall be grooved with a tool at the joint locations. The strips shall be inserted in the groove and depressed until the top edge of the vertical surface is flush with the surface of the slab. The slab shall be floated and finished as specified. Working of the concrete adjacent to the joint shall be the minimum necessary to fill voids and consolidate the concrete. Where indicated, the top portion of the strip shall be sawed out after the curing period to form a recess for sealer. The removable section of PVC strips shall be discarded and the insert left in place. Means shall be provided to insure true alignment of the strips is maintained during insertion.

3.1.1.2 Sawed Joints

Joint sawing shall be early enough to prevent uncontrolled cracking in the slab, but late enough that this can be accomplished without appreciable spalling. Concrete-sawing machines shall be adequate in number and power, and with sufficient replacement blades to complete the sawing at the required rate. Joints shall be cut to true alignment and shall be cut in sequence of concrete placement. Sludge and cutting debris shall be removed.

3.1.2 Isolation Joints

Premolded isolation joint filler shall be used in isolation joints in slabs around columns and between slabs on grade and vertical surfaces where indicated. The filler shall extend the full slab depth, unless otherwise indicated. The edges of the joint shall be neatly finished with an edging tool of 1/8-inch radius, except where a resilient floor surface will be applied. Where the joint is to receive a sealant, the filler strips shall be installed at the proper level below the finished floor with a slightly tapered, dressed-and-oiled wood strip temporarily secured to the top thereof to form a recess 3/4-inch deep to be filled with sealant. The wood strip shall be removed after the concrete has set. In lieu of the wood strip a removable expansion filler cap designed and fabricated for this purpose may be used.

3.1.3 Slab on Grade Construction Joints

The edges of the joint shall be neatly finished with an edging tool of 1/8" radius except where a resilient floor surface will be applied.

3.1.4 Joint Sealant

Shrinkage control joints, isolation joints, and slab on grade construction joints in slabs shall be filled with joint sealant, unless otherwise shown. Types and locations of sealants shall be as indicated. Joint surfaces shall be clean, dry, and free of oil or other foreign material which would adversely affect the bond between sealant and concrete. Follow any joint preparation recommendations provided by the sealant manufacturer. Joint sealant shall be applied as recommended by the manufacturer of the sealant. Joints sealed with field molded sealant shall be completely filled with sealant.

3.2 WATERSTOPS

Waterstops shall be of the type indicated and shall be installed at the locations shown to form a continuous water-tight diaphragm. Adequate provision shall be made to support and completely protect the waterstops during the progress of the work. Any waterstop punctured or damaged shall be repaired or replaced. Splices shall be made in conformance with the recommendations of the waterstop manufacturer. Continuity of cross sectional features shall be maintained across the splice. Splices showing evidence of separation after bending shall be remade.

SECTION 03300

CONCRETE FOR BUILDING CONSTRUCTION

1 GENERAL

1.1 REFERENCES

The publications listed below form a part of this specification to the extent referenced. The publications are referred to in the text by basic designation only.

AMERICAN CONCRETE INSTITUTE (ACI)

ACI 117	(1990; Errata) Standard Tolerances for Concrete Construction and Materials
ACI 211.1	(1991) Standard Practice for Selecting Proportions for Normal, Heavyweight, and Mass Concrete
ACI 211.2	(1991) Standard Practice for Selecting Proportions for Structural Lightweight Concrete
ACI 301	(1996) Structural Concrete for Buildings
ACI 305R	(1991) Hot Weather Concreting
ACI 318	(1995) Building Code Requirements for Reinforced Concrete

AMERICAN SOCIETY FOR TESTING AND MATERIALS (ASTM)

ASTM A 108	(1990) Steel Bars, Carbon, Cold-Finished Standard Quality
ASTM A 36	(1991) Structural Steel
ASTM A 496	(1995) Steel Wire, Deformed for Concrete Reinforcement
ASTM C 31	(1991) Making and Curing Concrete Test Specimens in the Field
ASTM C 33	(1993) Concrete Aggregates
ASTM C 39	(1994) Compressive Strength of Cylindrical Concrete Specimens
ASTM C 42	(1994) Obtaining and Testing Drilled Cores and Sawed Beams of Concrete
ASTM C 78	(1994) Flexural Strength of Concrete (Using Simple Beam With Third-Point Loading)

ASTM C 94	(1996) Ready-Mixed Concrete
ASTM C 109	(1992) Compressive Strength of Hydraulic Cement Mortars (Using 2-in. or 50-mm Cube Specimens)
ASTM C 143	(1990a) Slump of Hydraulic Cement Concrete
ASTM C 150	(1995) Portland Cement
ASTM C 171	(1995) Sheet Materials for Curing Concrete
ASTM C 172	(1990) Sampling Freshly Mixed Concrete
ASTM C 173	(1994a) Air Content of Freshly Mixed Concrete by the Volumetric Method
ASTM C 192	(1990a) Making and Curing Concrete Test Specimens in the Laboratory
ASTM C 231	(1991b) Air Content of Freshly Mixed Concrete by the Pressure Method
ASTM C 260	(1995) Air-Entraining Admixtures for Concrete
ASTM C 309	(1995) Liquid Membrane-Forming Compounds for Curing Concrete
ASTM C 330	(1989) Lightweight Aggregates for Structural Concrete
ASTM C 494	(1992) Chemical Admixtures for Concrete
ASTM C 552	(1991) Cellular Glass Thermal Insulation
ASTM C 567	(1991) Unit Weight of Structural Lightweight Concrete
ASTM C 578	(1995) Rigid, Preformed, Cellular Polystyrene Thermal Insulation
ASTM C 591	(1994) Unfaced Preformed Rigid Cellular Polyurethane Thermal Insulation
ASTM C 595	(1992a) Blended Hydraulic Cements
ASTM C 597	(1983; R 1991) Pulse Velocity Through Concrete
ASTM C 618	(1996a) Fly Ash and Raw or Calcined Natural Pozzolan for Use as a Mineral Admixture in Portland Cement Concrete
ASTM C 803	(1990) Penetration Resistance of Hardened Concrete

ASTM C 805	(1985) Rebound Number of Hardened Concrete
ASTM C 881	1990 Epoxy-Resin-Base Bonding Systems for Concrete
ASTM C 939	1987 Test Report for Flow of Grout for Pre-Placed Concrete. Flow Cone Method
ASTM C 989	(1994a) Ground Granulated Blast-Furnace Slag for Use in Concrete and Mortars
ASTM C 1017	(1992) Chemical Admixtures for Use in Producing Flowing Concrete
ASTM C 1107	(1991a) Packaged Dry, Hydraulic-Cement Grout (Nonshrink)
ASTM C 1116	(1991) Fiber Reinforced Concrete and Shotcrete
ASTM D 98	(1987) Calcium Chloride
ASTM D 4397	1991 Polyethylene Sheeting for Construction, Industrial, and Agricultural Applications
ASTM E 96	(1995) Water Vapor Transmission of Materials

FEDERAL SPECIFICATIONS (FS)

FS CCC-C-467	(Rev C) Cloth, Burlap, Jute (or Kenaf)

NATIONAL READY-MIXED CONCRETE ASSOCIATION (NRMCA)

NRMCA CPMB 100	(1990) Concrete Plant Standards
NRMCA QC 3	(1984) Quality Control Manual: Section 3, Plant Certifications Checklist: Certification of Ready-Mixed Concrete Production Facilities
NRMCA TMMB	(1992) Truck Mixer, and Agitator Standards

1.2 SUBMITTALS

Government approval is required for submittals with a "GA" designation; submittals having an "FIO" designation are for information only. The following shall be submitted in accordance with Section 01330 SUBMITTAL PROCEDURES:

SD-08 Statements

Mix Design; GA.

The results of trial mix along with a statement giving the maximum nominal coarse aggregate size and the proportions of all ingredients that will be used in the manufacture of each strength of concrete, at least 30 days prior to commencing concrete placing operations. Aggregate weights shall be based on the saturated surface dry condition. The statement shall be accompanied by test results from an independent commercial testing laboratory, attesting

that the proportions selected will produce concrete of the qualities indicated. No substitutions shall be made in the materials used in the work without additional tests to show that the quality of the concrete is satisfactory.

SD-09 Reports

Test Reports; GA.

Certified copies of laboratory test reports, including all test data, for aggregate, admixtures, and curing compound. These tests shall be made by an approved commercial laboratory or by a laboratory maintained by the manufacturers of the materials. Test to determine flexural toughness index 15 in accordance with ASTM C 1116.

SD-13 Certificates

Cementitious Materials; GA

Manufacturer's certification of compliance, accompanied by mill test reports attesting that the materials meet the requirements of the specification under which it is furnished, for cement, pozzolan, and ground iron blast-furnace slag. No cement, pozzolan, or slag shall be used until notice of acceptance has been given. Cement, pozzolan, and slag may be subjected to check testing by the Government from samples obtained at the mill, at transfer points, or at the project site.

Perimeter Insulation; FIO.

Certificate attesting that the polyurethane insulation furnished for the project contains recovered material, and showing an estimated percentage of such recovered material.

1.3 GENERAL REQUIREMENTS

Tolerances for concrete construction and materials shall be in accordance with ACI 117.

1.3.1 Strength Requirements

Structural concrete for all work not listed in paragraph 1.3.4 "Concrete Properties" shall have a 28-day compressive strength of 4000 pounds per square inch. Concrete made with high-early strength cement shall have a 7-day strength equal to the specified 28-day strength for concrete made with Type I or II portland cement.

1.3.2 Air Entrainment

Concrete in foundations shall contain air as listed in paragraph 1.3.4 "Concrete Properties". Other concrete where not listed may, at the option of the Contractor, be air entrained to produce concrete with 3 to 5 percent total air.

1.3.3 Special Properties

Concrete may contain other admixtures, such as water reducers, superplasticizers, or set retarding agents to provide special properties to the concrete, if approved.

1.3.4 Concrete Properties

Slump shall be within the following limits:

Location	f'c (Min. 28-Day Comp. Strength) (psi)	ASTM C 33 Aggregate (Size No.)	Range of Slump (inches)	Max. Water-Cement Ratio (by weight)	Air Entr. (percent)
Foundations	4000	467	1-4	.40	3.5-6.5
Reinforced CIP Walls & Slabs	4000	57	1-4	.45	3.5-6.5
Pavement and exterior slabs	3500	67	1-4	.50	4-7
Topping slabs - Mtl Dk	3500	7	1-4	.45	None
Walks, curbs, wheelstops & gutters	3500	67	1-4	.50	4-7
Utility Structures	4000	57	1-4	.50	4-7
Drainage Structures	4000	67	1-4	.50	5-8
Slab on Grade	4000	7	1-4	.45	3-4

*Where use of superplasticizers are approved to produce flowing concrete these slump requirements do not apply. Water/cement ratios given are for non air entrained concrete.

1.3.5 Technical Service for Specialized Concrete

The service of a technical representative shall be obtained to oversee proportioning, batching, mixing, placing, consolidating and finishing of specialized structural concrete, such as lightweight, fiber-reinforced, or flowing concrete until field controls indicate concrete of specified quality is furnished.

1.4 PROPORTIONS OF MIX

1.4.1 Mixture Proportioning, Normal Weight Concrete

Trial batches shall contain materials proposed to be used in the project. Trial mixtures having proportions, consistencies and air content suitable for the work shall be made based on methodology described in ACI 211.1,

using at least three different water-cement ratios. Trial mixes shall be proportioned to produce concrete compressive strengths specified. In the case where ground iron blast-furnace slag is used, the weight of the slag will be substituted in the equations for the term P which is used to denote the weight of pozzolan. Trial mixtures shall be designed for maximum permitted slump and air content. The temperature of concrete in each trial batch shall be reported. For each water-cement ratio at least three test cylinders or beams for each test age shall be made and cured in accordance with ASTM C 192. They shall be tested at 7 and 28 days in accordance with ASTM C 39 or ASTM C 78. From these test results a curve shall be plotted showing the relationship between water-cement ratio and compressive strength. For each strength of concrete the maximum allowable water-cement ratio shall be that shown by these curves to produce an average strength as specified in paragraph AVERAGE STRENGTH. (Section 1.4.2)

1.4.2 Average Strength

In meeting the strength requirements specified, the selected mixture proportion shall produce an average compressive strength exceeding the specified strength by the amount indicated below. Where a concrete production facility has test records, a standard deviation shall be established. Test records from which a standard deviation is calculated shall represent materials, quality control procedures, and conditions similar to those expected; shall represent concrete produced to meet a specified strength or strengths within 1000 psi of that specified for proposed work; and shall consist of at least 30 consecutive tests. A strength test shall be the average of the strengths of two cylinders made from the same sample of concrete and tested at 28 days or at other test age designated for determination of the specified strength.

1.4.2.1 Test Records Exceeding 29

Required average compressive strength used as the basis for selection of concrete proportions shall be the larger of the specified strength plus the standard deviation multiplied by 1.34 or the specified strength plus the standard deviation multiplied by 2.33 minus 500.

1.4.2.2 Test Records Less Than 29

Where a concrete production facility does not have test records meeting the above requirements but does have a record based on 15 to 29 consecutive tests, a standard deviation may be established as the product of the calculated standard deviation and a modification factor from the following table:

No. of tests (1)	Modification factor for standard deviation
less than 15	See Note
15	1.16
20	1.08
25	1.03
30 or more	1.00

(1) Interpolate for intermediate numbers of tests.

When a concrete production facility does not have field strength test records for calculation of standard deviation or the number of tests is less than 15, the required average strength shall be:

a. The specified strength plus 1000 specified strength of less than 3000 psi.

b. The specified strength plus 1200 for specified strengths of 3000 to 5000 psi.

c. The specified strength plus 1400 for specified strengths greater than 5000 psi.

1.5 STORAGE OF MATERIALS

Cement and pozzolan shall be stored in weathertight buildings, bins, or silos which will exclude moisture and contaminants. Aggregate stockpiles shall be arranged and used in a manner to avoid excessive segregation and to prevent contamination with other materials or with other sizes of aggregates. Reinforcing bars and accessories shall be stored above the ground on platforms, skids or other supports. Other materials shall be stored in such a manner as to avoid contamination and deterioration. Admixtures which have been in storage at the project site for longer than 6 months or which have been subjected to freezing shall not be used unless retested and proven to meet the specified requirements.

2 PRODUCTS

2.1 ADMIXTURES

Admixtures shall conform to the following:

2.1.1 Accelerating Admixture

ASTM C 494, Type C or E; No calcium chloride or admixtures that contain chlorides shall be used.

2.1.2 Air-Entraining Admixture

ASTM C 260.

2.1.3 Flowing Concrete Admixture

ASTM C 1017, Type 1 or 2.

2.1.4 Water-Reducing or Retarding Admixture

ASTM C 494, Type A, B, D, F, or G.

2.1.5 Superplasticizers

ASTM C 494, Type F. Superplasticizers shall be batch plant added, extend rheoplastic time, maintain setting characteristics similar to normal concrete throughout the recommended dosage range at varying concrete

temperatures, reduce water 30 to 40 percent, and give higher early and ultimate strengths.

2.2 CEMENTITIOUS MATERIALS

Cementitious materials shall each be of one type and from one source when used in concrete which will have surfaces exposed in the finished structure. Cementitious materials shall conform to one of the following:

2.2.1 Cement

ASTM C 150, Type I or II.

2.2.2 Pozzolan

ASTM C 618, Class F. Pozzolan may be blended with Type I or II portland cement. When a pozzolan is used in a flexural strength concrete mix design, the solid volume of pozzolan when combined with portland cement shall not exceed 25 percent of the solid volume of portland cement plus pozzolan. Only one class of pozzolan, from a single source, shall be used. The maximum allowable loss on ignition shall be 6 percent. Add with cement. Weigh fly ash separately from cement.

2.2.3 Ground Iron Blast-Furnace Slag

ASTM C 989, Grade 120.

2.3 AGGREGATES

Aggregates shall conform to the following:

2.3.1 Normal Weight Aggregate

2.4 ASTM C 33. GRADING REQUIREMENT FOR COARSE AGGREGATE SHALL CONFORM TO SIZE NUMBER 57 OR 67, UNLESS NOTED OTHERWISE IN PARAGRAPH 1.3.4 "CONCRETE PROPERTIES". 2.4 CURING MATERIALS

2.4.1 Burlap

FS CCC-C-467.

2.4.2 Impervious Sheets

ASTM C 171, type optional, except that polyethylene film, if used, shall be white opaque.

2.4.3 Membrane-Forming Compounds

ASTM C 309, Type 1-D, Class A or B.

2.5 EMBEDDED ITEMS

Embedded items shall be of the size and type indicated or as needed for the application. Dovetail slots shall be galvanized steel. Hangers for suspended ceilings shall be as specified in Section 09510 ACOUSTICAL CEILINGS. Inserts for shelf angles and bolt hangers shall be of malleable iron or cast or wrought steel.

2.5.1 Structural Steel

ASTM A 36.

2.5.2 Headed Studs

ASTM A 108, Grade 1010 to 1020.

2.5.3 Welded Deformed Bars

ASTM A 496.

2.6 NONSHRINK GROUT

Nonshrink grout shall conform to ASTM C 1107 Grade A or B and shall be a formulation suitable for the application. The grout shall be a prepackaged natural aggregate grout, mixed, placed, and cured as recommended by the manufacturer. The manufacturer's warranty shall not contain a disclaimer or limit the responsibility to only replacement of product or purchase price. Grout shall conform to ASTM C 1107 when tested at a fluid consistency (20 to 30 seconds) per ASTM C 939 after 30 minutes, at 45 deg. F, 70 deg. F and 90 deg. F. Grout manufacturer shall certify with independent test data that the expansion at 3 or 14 days does not exceed the 28 day expansion and that its non shrink property is not based on gas expansion. Fluid grout shall pass through the flow cone 1 hour after batching at a 60 second flow maximum, and have a minimum strength of 2,500 psi at 1 day, 4,500 psi at 3 days and 7,000 psi at 28 days.

2.7 FIBER REINFORCEMENT

In addition to the requirements specified above, fiber reinforced concrete where specified shall be provided in accordance with ASTM C 1116 Type III, synthetic fiber reinforced concrete, and as follows. Synthetic reinforcing fibers shall be 100 percent virgin polypropylene fibrillated fibers containing no olefin materials. Fibers shall have a specific gravity of 0.9, a minimum tensile strength of 70 ksi, graded per manufacturer, and specifically manufactured to an optimum gradation for use as concrete secondary reinforcement. A minimum of 1.5 pounds of fibers per cubic yard of concrete shall be used. Fibers shall be added at the batch plant. Toughness indices shall meet requirements for performance level I. Provide the services of a qualified technical representative to instruct the concrete supplier in proper batching and mixing of materials to be provided.

2.8 NONSLIP SURFACING MATERIAL

Nonslip surfacing material shall consist of fifty-five percent, minimum, aluminum oxide or silicon-dioxide abrasive ceramically bonded together to form a homogeneous material sufficiently porous to provide a good bond with portland paste; or factory-graded emery material consisting of not less than 45 percent aluminum oxide and 25 percent ferric oxide. The material shall be well graded from particles retained on the No. 30 sieve to particles passing the No. 8 sieve.

2.9 FLOOR HARDENER

Floor hardener shall be a colorless aqueous solution containing zinc silicofluoride, magnesium silicofluoride, or sodium silicofluoride. These silicofluoride can be used individually or in combination. Proprietary hardeners may be used if approved by the contracting officer.

2.10 PERIMETER INSULATION

Perimeter insulation shall be polystyrene conforming to ASTM C 578, Type II; polyurethane conforming to ASTM C 591, Type II and having a minimum recovered material content of 9 percent by weight of core material in the polyurethane portion; or cellular glass conforming to ASTM C 552, Type I or IV. Polyurethane insulation shall contain the highest practicable percentage of recovered material which has been recovered or diverted from solid waste, but not involving material reused in a manufacturing process. Where two materials have the same price and performance, the one containing the higher recovered material content shall be provided.

2.11 VAPOR BARRIER

Vapor barrier ASTM D 4397 shall be polyethylene sheeting with a minimum thickness of (6 mils) or other equivalent material having a vapor permeance rating not exceeding 0.5 perms as determined in accordance with ASTM E 96.

2.12 WATER

Water shall be potable, except that nonpotable water may be used if it produces mortar cubes having 7- and 28-day strengths at least 90 percent of the strength of similar specimens made with water from a municipal supply. The strength comparison shall be made on mortars, identical except for mixing water, prepared and tested in accordance with ASTM C 109. Water for curing shall not contain any substance injurious to concrete, or which causes staining.

2.13 BONDING AGENT

Epoxy bonding compound ASTM C 881, Type II, Grade 1, Class A if placement temperature is below 40 degrees F; Class B if placement temperature is between 40 and 60 degrees F; or Class C if placement temperature is above 60 degrees F. Provide Grade 1 or 2 for horizontal surfaces and Grade 3 for vertical surfaces.

3 EXECUTION

3.1 PREPARATION OF SURFACES

Surfaces to receive concrete shall be clean and free from frost, ice, mud, and water. Conduit and other similar items shall be in place and clean of any deleterious substance.

3.1.1 Foundations

Earthwork shall be as specified in Section 02221 EXCAVATION, FILLING, AND BACKFILLING FOR BUILDINGS. Flowing water shall be diverted without washing over freshly deposited concrete. Rock foundations shall be cleaned by high velocity air-water jets, sandblasting, or other approved methods. Debris

and loose, semi-detached or unsound fragments shall be removed. Rock surfaces shall be moist but without free water when concrete is placed. Semiporous subgrades for foundations and footings shall be damp when concrete is placed. Pervious subgrades shall be sealed by blending impervious material with the top 6 inches of the in-place previous material or by covering with an impervious membrane.

3.2 PERIMETER INSULATION

Perimeter insulation shall be installed at locations indicated. Adhesive shall be used where insulation is applied to the interior surface of foundation walls.

3.2.1 Vapor Barrier

Unless otherwise indicated, subgrades for slabs in buildings shall be covered with a vapor barrier. Vapor barrier edges shall be lapped at least 4 inches and ends shall be lapped not less than 6 inches. Patches and lapped joints shall be sealed with pressure-sensitive adhesive or tape not less than 2 incheswide and compatible with the membrane.

3.2.2 Preparation of Previously Placed Concrete

Concrete surfaces to which other concrete is to be bonded shall be roughened in an approved manner to 1\4" asperity that will expose sound aggregate uniformly without damaging the concrete. Laitance and loose particles shall be removed and a concrete bonding agent applied per manufacturer. Surfaces shall be moist but without free water when concrete is placed.

3.2.3 Application of Epoxy Bonding Compound

Apply a thin coat of compound to dry, clean surfaces. Scrub compound into the surface with a stiff-bristle brush. Place concrete while compound is tacky/stringy. Do not permit compound to harden prior to concrete placement. Follow manufacturer's instructions regarding safety and health precautions when working with epoxy resins.

3.3 INSTALLATION OF EMBEDDED ITEMS

Embedded items shall be free from oil, loose scale or rust, and paint. Embedded items shall be installed at the locations indicated and required to serve the intended purpose. Voids in sleeves, slots and inserts shall be filled with readily removable material to prevent the entry of concrete.

3.4 BATCHING, MIXING AND TRANSPORTING CONCRETE

Ready-mixed concrete shall be batched, mixed and transported in accordance with ASTM C 94, except as otherwise specified. Truck mixers, agitators, and nonagitating units shall comply with NRMCA TMMB. Ready-mix plant equipment and facilities shall be certified in accordance with NRMCA QC 3. Site-mixed concrete shall be mixed in accordance with ACI 301. On-site plant shall conform to the NRMCA CPMB 100.

3.4.1 Admixtures

Admixtures shall be batched within an accuracy of 3 percent. Where two or more admixtures are used in the same batch, they shall be batched separately

and must be compatible. Retarding admixture shall be added within one minute after addition of water is complete or in the first quarter of the required mixing time, whichever is first. Superplasticizing admixtures shall be added as recommended by manufacturer. Concrete that shows evidence of total collapse or segregation caused by the use of admixture shall be removed from the site.

3.4.2 Control of Mixing Water

No water from the truck system or elsewhere shall be added after the initial introduction of mixing water for the batch except when on arrival at the jobsite, the slump of the concrete is less than that specified. Water added to bring the slump within the specified range shall not change the total water in the concrete to a point that the approved water-cement ratio is exceeded. The drum shall be turned an additional 30 revolutions, or more, if necessary, until the added water is uniformly mixed into the concrete. Water shall not be added to the batch at any later time. Water may be added at the jobsite only with the approval of the Quality Control Inspector and only to attain the specified slump. Adjust following batches at the plant so that water will not be added at the jobsite.

3.5 SAMPLING AND TESTING

Sampling and Testing is the responsibility of the Contractor and shall be performed by an approved independent commercial testing agency.

3.5.1 Aggregates

Aggregates for normal weight concrete shall be sampled and tested in accordance with ASTM C 33. Gradation tests shall be performed on the first day and every other day thereafter during concrete construction.

3.5.2 Sampling of Concrete

Samples of concrete for air, slump, unit weight, and strength tests shall be taken in accordance with ASTM C 172.

3.5.2.1 Air Content

Test for air content shall be performed in accordance with ASTM C 173or ASTM C 231. A minimum of 1 test per day shall be conducted.

3.5.2.2 Slump

At least 2 slump tests shall be made on randomly selected batches of each mixture of concrete during each day's concrete placement. Tests shall be performed in accordance with ASTM C 143.

3.5.3 Evaluation and Acceptance of Concrete

3.5.3.1 Frequency of Testing

Sampling and testing of concrete shall be performed as specified in Section 01400 "Contractor Quality Control" but no less than: Samples for strength tests of each class of concrete placed each day shall be taken not less than once a day, nor less than once for each 150 cubic yards of concrete, nor less than once for each 5000 square feet of surface area for slabs or walls.

If this sampling frequency results in less than 5 strength tests for a given class of concrete, tests shall be made from at least 5 randomly selected trucks or from each truck if fewer than 5 truck loads are used. Field cured specimens for determining form removal time or when a structure may be put in service shall be made in numbers directed to check the adequacy of curing and protection of concrete in the structure. The specimens shall be removed from the molds at the age of 24 hours and shall be cured, insofar as practicable, in the same manner as that given to the portion of the structure the samples represent.

3.5.3.2 Testing Procedures

Cylinders and beams for acceptance tests shall be molded and cured in accordance with ASTM C 31. Cylinders shall be tested in accordance with ASTM C 39 and beams shall be tested in accordance with ASTM C 78. A strength test shall be the average of the strengths of two cylinders or beams made from the same sample of concrete and tested at 28 days or at another specified test age.

3.5.3.3 Evaluation of Results

Concrete specified on the basis of compressive strength will be considered satisfactory if the averages of all sets of three consecutive strength test results equal or exceed the specified strength and no individual strength test result falls below the required strength by more than 500 pounds per square inch. For flexural strength concrete, the strength level of the concrete will be considered satisfactory if the averages of all sets of five consecutive strength test results equal or exceed the required flexural strength, and not more than 20 percent of the strength test results fall below the required strength by more than 50 pounds per square inch.

3.5.4 Investigation of Low-Strength Test Results

When any strength test of standard-cured test cylinder falls below the specified strength requirement by more than 500 pounds per square inch, or if tests of field-cured cylinders indicate deficiencies in protection and curing, steps shall be taken to assure that load-carrying capacity of the structure is not jeopardized. Nondestructive testing in accordance with ASTM C 597, ASTM C 803 or ASTM C 805 may be permitted by the Contracting Officer to determine the relative strengths at various locations in the structure as an aid in evaluating concrete strength in place or for selecting areas to be cored. Such tests, unless properly calibrated, in properly calibrated and correlated with other test data, shall not be used as a basis for acceptance or rejection. When strength of concrete in place is considered potentially deficient, cores shall be obtained and tested in accordance with ASTM C 42. At least three representative cores shall be taken from each member or area of concrete in place that is considered potentially deficient. The location of cores shall be determined by the Contracting Officer to least impair the strength of the structure. If the concrete in the structure will be dry under service conditions, the cores shall be air dried (temperature 60 to 80 degrees F, relative humidity less than 60 percent) for seven days before testing and shall be tested dry. If the concrete in the structure will be more than superficially wet under service conditions, the cores shall be tested after moisture conditioning in accordance with ASTM C 42. Concrete in the area represented by the core testing will be considered adequate if the average strength of the cores is equal to or at least 85 percent of the specified strength requirement and if

no single core is less than 75 percent of the specified strength requirement. If the core tests are inconclusive or impractical to obtain, or if structural analysis does not confirm the safety of the structure, load tests may be directed by the Contracting Officer in accordance with the requirements of ACI 318. Concrete work evaluated by structural analysis or by results of a load test and found deficient shall be corrected in a manner satisfactory to the Contracting Officer. All investigations, testing, load tests, and correction of deficiencies shall be performed, and approved by the Contracting Officer, at the expense of the Contractor.

3.5.5 Field Inspection

3.5.5.1 Concrete

Inspect placement of concrete, embeds, fibrillated fiber matrix, vibration, bonding agents and nonshrink grout.

3.5.5.2 Field Reference

Contractor shall keep a copy of ACI Field Reference Manual SP-15-(89) in the job field office and available to Contracting Officer and Quality Control Inspector.

3.6 CONVEYING CONCRETE

Concrete shall be conveyed from mixer to forms as rapidly as possible and within the time interval specified in paragraph CONCRETE PLACEMENT by methods which will prevent segregation or loss of ingredients.

3.6.1 Chutes

When concrete can be placed directly from a truck mixer or other transporting equipment, chutes attached to this equipment may be used. Separate chutes will not be permitted except when specifically approved.

3.6.2 Buckets

Bucket design shall be such that concrete of the required slump can be readily discharged. Bucket gates shall be essentially grout tight when closed. The bucket shall provide means for positive regulations of the amount and rate of deposit of concrete in each dumping position.

3.6.3 Belt Conveyors

Belt conveyors may be used when approved. Belt conveyors shall be designed for conveying concrete and shall be operated to assure a uniform flow of concrete to the final place of deposit without segregation or loss of mortar. Conveyors shall be provided with positive means for preventing segregation of the concrete at transfer points and point of placement.

3.6.4 Pumps

Concrete may be conveyed by positive displacement pumps when approved. Pump shall be the piston or squeeze pressure type. Pipeline shall be steel pipe or heavy duty flexible hose. Inside diameter of the pipe shall be at least three times the maximum size of the coarse aggregate. Distance to be pumped shall not exceed the limits recommended by the pump manufacturer. Concrete

shall be supplied to the pump continuously. When pumping is completed, the concrete remaining in the pipeline shall be ejected without contaminating the concrete in place. After each use, the equipment shall be thoroughly cleaned. Flushing water shall be wasted outside the forms.

3.7 CONCRETE PLACEMENT

Mixed concrete which is transported in truck mixers or agitators or concrete which is truck mixed, shall be discharged within 1-1/2 hours or before the drum has revolved 300 revolutions, whichever comes first after the introduction of the mixing water to the cement and aggregates or the introduction of the cement to the aggregates. These limitations may be waived by the Government if the concrete is of such slump after the 1-1/2 hour time or 300 revolution limit has been reached that it can be placed, without the addition of water to the batch. When the concrete temperature exceeds 85 degrees F, the time shall be reduced to 45 minutes. Concrete shall be placed within 15 minutes after it has been discharged from the truck.

3.7.1 Placing Operation

Concrete shall be handled from mixer to forms in a continuous manner until the approved unit of operation is completed. Adequate scaffolding, ramps and walkways shall be provided so that personnel and equipment are not supported by in-place reinforcement. Placing will not be permitted when the sun, heat, wind, or limitations of facilities furnished by the Contractor prevent proper consolidation, finishing and curing. Concrete shall be deposited as close as possible to its final position in the forms, and there shall be no vertical drop greater than 8 feetexcept where suitable equipment is provided to prevent segregation and where specifically authorized. Depositing of the concrete shall be so regulated that it will be effectively consolidated in horizontal layers not more than 12 inches thick, except that all slabs shall be placed in a single layer. Concrete to receive other construction shall be screeded to the proper level to avoid excessive shimming or grouting.

3.7.2 Consolidation

Immediately after placing, each layer of concrete shall be consolidated by internal vibrators, except for slabs 4 inches or less. The vibrators shall at all times be adequate in effectiveness and number to properly consolidate the concrete; a spare vibrator shall be kept at the jobsite during all concrete placing operations. The vibrators shall have a frequency of not less than 8000 vibrations per minute, and the head diameter and amplitude shall be appropriate for the concrete mixture being placed. Vibrators shall be inserted vertically at uniform spacing over the area of placement. The distance between insertions shall be approximately 1-1/2 times the radius of action of the vibrator so that the area being vibrated will overlap the adjacent just-vibrated area by a few inches. The vibrator shall penetrate rapidly to the bottom of the layer and at least 6 inches into the preceding layer if there is such. Vibrator shall be held stationary until the concrete is consolidated and then withdrawn slowly. The use of form vibrators must be specifically approved. Vibrators shall not be used to transport concrete within the forms. Slabs 4 inches and less in thickness shall be consolidated by properly designed vibrating screeds or other approved technique.

3.7.3 Cold Weather Requirements

Special protection measures, approved by the Contracting Officer, shall be used if freezing temperatures are anticipated before the expiration of the specified curing period. The ambient temperature of the air where concrete is to be placed and the temperature of surfaces to receive concrete shall be not less than 40 degrees F. The temperature of the concrete when placed shall be not less than 50 degrees F nor more than 75 degrees F. Heating of the mixing water or aggregates will be required to regulate the concrete placing temperature. Materials entering the mixer shall be free from ice, snow, or frozen lumps. Salt, chemicals or other materials shall not be incorporated in the concrete to prevent freezing. Upon written approval, chemical admixture conforming to ASTM C 494 Type C or E may be used.

3.7.4 Warm Weather Requirements

The temperature of the concrete placed during warm weather shall not exceed 85 degrees F except where an approved retarder is used. The mixing water and/or aggregates shall be cooled, if necessary, to maintain a satisfactory placing temperature. In no case shall the placing temperature exceed 95 degrees F.

3.8 CONSTRUCTION JOINTS

Construction joints shall be located as indicated or approved. Where concrete work is interrupted by weather, end of work shift or other similar type of delay, location and type of construction joint shall be subject to approval of the Contracting Officer. Construction joints in slabs on grade, walls, and structural slabs shall be keyed or doweled as shown.

3.9 CONCRETE TOPPING CAST OVER STEEL FLOOR

It is the contractor's responsibility to construct floors that are leveled. Because of tolerances for camber and estimates of deflection, screeds must be set so that the finish floor is level after the concrete is placed. Minimum slab thickness noted on the drawings shall be provided. Actual slab thickness may be greater. Due to deflection of deck and beams during concrete placing, an allowance for additional quantity of concrete is required to achieve a level plane and shall be included. Levels shall be shot from a location that is not subject to deflections during the concrete placement and the floor elevations shall be checked during and immediately after the placement so that adjustments can be made.

3.10 FINISHING CONCRETE

3.10.1 Formed Surfaces

3.10.1.1 Repair of Surface Defects

Surface defects shall be repaired within 24 hours after the removal of forms. Honeycombed and other defective areas shall be cut back to solid concrete or to a depth of not less than 1 inch,whichever is greater. Edges shall be cut perpendicular to the surface of the concrete. The prepared areas shall be dampened and brush-coated with neat cement grout. The repair shall be made using mortar consisting of not more than 1 part cement to 2-1/2 parts sand. The mixed mortar shall be allowed to stand to stiffen (approximately 45 minutes), during which time the mortar shall be

intermittently remixed without the addition of water. After the mortar has attained the stiffest consistency that will permit placing, the patching mix shall be thoroughly tamped into place by means approved by the Contracting Officer and finished slightly higher than the surrounding surface. For Class A and Class B finished surfaces the cement used in the patching mortar shall be a blend of job cement and white cement proportioned to produce a finished repair surface matching, after curing, the color of adjacent surfaces. Holes left after the removal of form ties shall be cleaned and filled with patching mortar. Holes left by the removal of tie rods shall be reamed and filled by dry-packing. Repaired surfaces shall be cured as required for adjacent surfaces. The temperature of concrete, mortar patching material, and ambient air shall be above 50 degrees F while making repairs and during the curing period. Concrete with defects which affect the strength of the member or with excessive honeycombs will be rejected, or the defects shall be corrected as directed.

3.10.1.2 Class A Finish

Where a Class A finish is indicated, fins shall be removed. A mortar mix consisting of one part portland cement and two parts well-graded sand passing a No. 30 sieve, with water added to give the consistency of thick paint, shall be prepared. White cement shall be used to replace part of the job cement. After the surface has been thoroughly wetted and allowed to approach surface dryness, the mortar shall be vigorously applied to the area by clean burlap pads or by cork or wood-floating, to completely fill all surface voids. Excess grout shall be scraped off with a trowel. As soon as it can be accomplished without pulling the mortar from the voids, the area shall be rubbed with burlap pads until all visible grout film is removed. The rubbing pads shall have on their surfaces the same sand-cement mix specified above but without any mixing water. The finish of any area shall be completed in the same day, and the limits of a finished area shall be made at natural breaks in the surface. The surface shall be continuously moist cured for 48 hours. The temperature of the air adjacent to the surface shall be not less than 50 degrees F for 24 hours prior to, and 48 hours after, the application. In hot, dry weather the smooth finish shall be applied in shaded areas.

3.10.1.3 Class B Finish

Where a Class B finish is indicated, fins shall be removed. Concrete surface shall be smooth with a texture at least equal to that obtained through the use of Grade B-B plywood forms.

3.10.2 Unformed Surfaces

In cold weather, the air temperature in areas where concrete is being finished shall not be less than 50 degrees F. In hot windy weather when the rate of evaporation of surface moisture, as determined by methodology presented in ACI 305R, may reasonably be expected to exceed 0.2 pounds per square foot per hour; coverings, windbreaks, or fog sprays shall be provided as necessary to prevent premature setting and drying of the surface. The dusting of surfaces with dry materials or the addition of water during finishing will not be permitted. Finished surfaces shall be plane, with no deviation greater than 5/16 inch when tested with a 10-footstraightedge. Floor tolerance measurements shall be made as soon as possible after finishing. When forms or shoring are used the measurements shall be made prior to their removal. Surfaces shall be pitched to drains.

3.10.2.1 Trowel Finish

Slabs shall be given a trowel finish immediately following floating. Surfaces shall be trowelled to produce smooth, dense slabs free from blemishes including trowel marks. In lieu of hand finishing, an approved power finishing machine may be used in accordance with the directions of the machine manufacturer. A final hard steel troweling shall be done by hand.

3.10.2.2 Broom Finish

After floating, slabs, where indicated, shall be lightly trowelled, and then broomed with a fiber-bristle brush in a direction transverse to that of the main traffic.

3.10.2.3 FLOOR HARDENER

Floor hardener shall be applied after the concrete had been air dried for 28 days. Three coats shall be applied, each the day after the preceding coat was applied. For the first application, one pound of the silicofluoride shall be dissolved in one gallon of water. For subsequent applications, the solution shall be two pounds of silicofluoride to each gallon of water. Floor should be mopped with clear water shortly after the preceding application has dried to remove encrusted salts. Proprietary hardeners shall be applied in accordance with the manufacturer's instructions. During application, area should be well ventilated. Precautions shall be taken when applying silicofluorides due to the toxicity of the salts. Any compound that contacts glass or aluminum should be immediately removed with clear water.

3.11 CURING AND PROTECTION

3.11.1 General

All concrete shall be cured by an approved method for the period of time given below:

Concrete with Type III cement	3 days
Concrete with Type I, II, IP or IS cement	7 days
Concrete with Type I or Type II cement blended with pozzolan	7 days

Immediately after placement, concrete shall be protected from premature drying extremes in temperatures, rapid temperature change, mechanical injury and injury from rain and flowing water. Air and forms in contact with concrete shall be maintained at a temperature above 50 degrees F for the first 3 days and at a temperature above 32 degrees F for the remainder of the specified curing period. Exhaust fumes from combustion heating units shall be vented to the outside of the enclosure and heaters and ducts shall be placed and directed so as not to cause areas of overheating and drying of concrete surfaces or to create fire hazards. All materials and equipment needed for adequate curing and protection shall be available and at the site prior to placing concrete. No fire or excessive heat shall be permitted near or in direct contact with the concrete at any time. Curing shall be

accomplished by any of the following methods, or combination thereof, as approved.

3.11.2 Moist Curing

Concrete to be moist-cured shall be maintained continuously wet for the entire curing period. If water or curing materials used stains or discolors concrete surfaces which are to be permanently exposed, the concrete surfaces shall be cleaned. When wooden forms are left in place during curing, they shall be kept wet at all times. If the forms are removed before the end of the curing period, curing shall be carried out as on unformed surfaces, using suitable materials. Horizontal surfaces shall be cured by ponding, by covering with a 2-inchminimum thickness of continuously saturated sand, or by covering with waterproof paper, polyethylene sheet, polyethylene-coated burlap or saturated burlap.

3.11.3 Membrane Curing

No concrete liquid curing compound shall be used unless approved by the Contracting Officer. Membrane curing shall not be used on surfaces that are to receive any subsequent treatment depending on adhesion or bonding to the concrete; except a styrene acrylate or chlorinated rubber compound meeting ASTM C 309, Class B requirements may be used for surfaces which are to be painted or are to receive bituminous roofing or waterproofing, or floors that are to receive adhesive applications of resilient flooring. The curing compound selected shall be compatible with any subsequent paint, roofing, waterproofing or flooring specified. Membrane curing compound shall not be used on surfaces that are maintained at curing temperatures with free steam. Curing compound shall be applied to formed surfaces immediately after the forms are removed and prior to any patching or other surface treatment except the cleaning of loose sand, mortar, and debris from the surface. Surfaces shall be thoroughly moistened with water and the curing compound shall be applied to slab surfaces as soon as the bleeding water has disappeared, with the tops of joints being temporarily sealed to prevent entry of the compound and to prevent moisture loss during the curing period. Compound shall be applied in a one-coat continuous operation by mechanical spraying equipment, at a uniform coverage in accordance with the manufacturer's printed instructions. Compound shall be placed at the concentration and maximum coverage area recommended by the manufacturer. Concrete surfaces which have been subjected to rainfall within 3 hours after curing compound has been applied shall be resprayed by the method and at the coverage specified. On surfaces permanently exposed to view, the surface shall be shaded from direct rays of the sun for the duration of the curing period. Surfaces coated with curing compound shall be kept free of foot and vehicular traffic, and from other sources of abrasion and contamination during the curing period.

3.12 SETTING BASE PLATES AND BEARING PLATES

After being properly positioned, column base plates, bearing plates for beams and similar structural members, and machinery and equipment base plates shall be set to the proper line and elevation with damp-pack bedding mortar, except where nonshrink grout is indicated. The thickness of the mortar or grout shall be as indicated, but not less than 3/4 inch. Concrete and metal surfaces in contact with grout shall be clean and free of oil and grease, and concrete surfaces in contact with grout shall be damp and free of laitance when grout is placed.

3.12.1 Damp-Pack Bedding Mortar

Damp-pack bedding mortar shall consist of 1 part cement and 2-1/2 parts fine aggregate having water content such that a mass of mortar tightly squeezed in the hand will retain its shape but will crumble when disturbed. The space between the top of the concrete and bottom of the bearing plate or base shall be packed with the bedding mortar by tamping or ramming with a bar or rod until it is completely filled.

3.12.2 Nonshrink Grout

Nonshrink grout shall be mixed and placed in accordance with material manufacturer's written recommendations. Forms of wood or other suitable material shall be used to retain the grout. The grout shall be placed quickly and continuously, completely filling the space without segregation or bleeding of the mix.

3.12.3 Treatment of Exposed Surfaces

For metal-oxidizing nonshrink grout, exposed surfaces shall be cut back 1 inch and immediately covered with a parget coat of mortar consisting of 1 part portland cement and 2-1/2 parts fine aggregate by weight, with sufficient water to make a plastic mixture. The parge coat shall have a smooth finish. For other mortars or grouts, exposed surfaces shall be left untreated. Curing shall comply with paragraph CURING AND PROTECTION.

--End of Section--

SECTION 03300 APPENDIX A

CONTROLLED LOW STRENGTH MATERIAL (CLSM)

PART 1 GENERAL

For items not called out see main Section 03300 CONCRETE FOR BUILDING CONSTRUCTION.

1.1 DESCRIPTION

Controlled low strength mix hereafter known as CLSM shall consist of a mixture of a) portland cement b) pozzolan c) fine aggregate d) coarse aggregate e) water and f) admixtures. Work shall consist of placing the CLSM as a backfill for footing over excavations and utility trenches where the use of conventional compacting equipment is deemed inappropriate or impractical. The material is neither categorized as a low strength concrete or a soil-cement. All flowable fill after setting is intended to be removable by conventional mechanical excavation methods. The material shall flow over and around pipe or conduit, providing uniform support without leaving voids.

1.2 REFERENCES

References shall be per Section 03300 CONCRETE FOR BUILDING CONSTRUCTION.

1.3 SUBMITTALS

Government approval is required for submittals with a “GA” designation; submittals having an “FIO” designation are for information only. The following shall be submitted in accordance with Section 01300 SUBMITTAL PROCEDURES.

1.3.1 Mix Design

CLSM trial mixes must be submitted to the government for approval. Mix design shall be supported by test data. Tests shall be the result of laboratory tests or results of testing on CLSM used for other work. Tests shall list type, source, batch proportions and conformance to strength requirements. Submittal shall occur a minimum of 15 working days prior to placement.

1.3.2 Test Reports

Certified copies of laboratory test reports and field test reports for items noted under paragraph 3.5 Sampling and Testing. Tests shall be made by an approved independent commercial testing agency and shall be the responsibility of the Contractor.

PART 2 PRODUCTS

2.1 MATERIALS

CLSM shall consist of the following materials:

2.1.1 Cement

ASTM C-150 Types I or II.

2.1.2 Fly Ash

ASTM C 618 Class F only and shall not inhibit the entrainment of air, no loss on ignition requirement.

2.1.3 Fine Aggregate

ASTM C 33, 100% passing the 3/4-inch sieve with 10% max passing the #200 sieve, and fine enough to stay in suspension in the mixture to the extent required for proper flow.

2.1.4 Coarse Aggregate

ASTM C 33, 7/8 inch top size gravel.

2.1.5 Water

ASTM C 94.

2.1.6 Air Entraining Admixture

ASTM C 260.

PART 3 EXECUTION

3.1 MIX REQUIREMENTS

Slump 10" ± 1"

Unconfined Compressive Strength:	Min f'c = 125 psi @ 28 days Max f'c = 400 psi @ 90 days (250 psi where future excavation anticipated) with no significant gain after 90 days
Water/Cement ratio:	Min W/C = 1.0 Max W/C = 2.0 Fly ash shall be considered part of the cementitious content

CLSM mix design shall be governed by absolute volume relationships and basic mix proportions set forth by the ready mix producer. The actual mix proportions shall be determined by the producer of the CLSM to meet job site conditions, method of deposit/placement, the mix requirements listed above, and unit weight. Entrained air shall be a minimum of 8 percent. The actual entrained air content shall be established for each job with the materials and aggregates to be used and shall not lead to a segregation of the mix. CLSM trial mixes must be submitted to the government for approval. Mix design shall be supported by test data. Tests shall be the result of laboratory tests or results of testing on CLSM used for other work. Tests shall list type, source, batch proportions and conformance to strength requirements. Special care must be taken with the use of fly ash to ensure that the long-term strength does not exceed the maximum f'c specified.

3.2 Batching and Mixing

During the progress of the work no changes shall be made in the batch proportions of the ingredients without approval of the Contracting Officer. Materials must come from the same sources and have the same characteristic as that used in the mix design. Should a change in source materials be made

a new mix design shall be provided by the contractor for government approval. No water shall be added to the mix after it has left the ready mix plant.

3.3 Placement

The mix has a very high slump, flowability and workability which eliminates the need for labor intensive mechanical vibration and/or compaction, therefore; neither shall be used. The mix consistency, similar to that of slurry, will seek its own level. It is the responsibility of the contractor to plug openings below the level of the desired backfill which would permit escape of the mix. Formed walls or bulkheads shall be constructed to withstand the hydrostatic pressure exerted by the plastic CLSM. CLSM shall be placed so that it flows around and beneath such footings, foundations, walls, pipes or other structures it was designed to support. The material when properly placed is self-compacting, and self-densifying. Air pockets that water would normally fill must be vented or otherwise eliminated so as to preclude voids remaining in the completed backfill.

CLSM shall be batched by a ready mixed concrete plant and delivered to the job site by means of transit mixing trucks. The mixture shall be transported to the point of placement in a revolving drum mixer or agitator. Sufficient mixing capacity shall be provided to permit mix to be placed without interruption. The temperature of the mix as manufactured and delivered shall be at least 45 degrees F. CLSM shall not be placed on frozen ground. Mixing and placing may begin only if ambient air temperature is 35 degree F and rising and stopped if 40 degree F and falling.

During placement, when manholes and pipes are present in the excavation, care shall be used to avoid dislocating any pipes due to fluid pressure from the flowable fill; to include any securing to prevent the buoyant effect of the fill. Filling operations shall proceed simultaneously on both sides of pipe or conduit so that the two fills are kept at approximately the same elevation at all times.

If flowable fill is placed in lifts, the base for each lift shall be thoroughly roughened and free of any deleterious material or debris.

CLSM can be placed under water to displace water accumulated in the bottom of a trench. The material shall be placed by tremie pipe at the bottom of the trench. The discharge end of the pipe must remain within the fluid CLSM 1'-O" at all times for the full height of CLSM placement.

3.4 Curing and Protection

The air in contact with the CLSM surfaces should be maintained at temperatures above freezing for a minimum of 72 hours.

There is a substantial water gain (bleeding) on the surface which is normal. Once this water has evaporated no other means of curing is necessary. The fill shall be left undisturbed until it attains sufficient strength as determined by 600 reading as measured from ASTM C 403 penetration resistance tests. As the extra water is displaced from consolidation of the CLSM there will be an initial subsidence of approximately 1/8-inches per vertical foot. Once the flowable fill hardens there will be no future settlement.

3.5 Sampling and Testing

3.5.1 Slump

Slump may be measured by using a standard slump cone and ASTM C 143 test procedure with the following exceptions: the CLSM shall not be rodded, but shall be placed in the cone in one continuous filling operation, slightly overfilled, tapped lightly and struck off.

3.5.2 Consistency

Consistency shall be tested by placing an open-ended cylinder (pipe) 3-inch diameter by 6 inches in height in an upright position on a smooth, level surface. Fill the cylinder with a representative sample of the CLSM proposed for use. Remove the cylinder by lifting it straight up, thus allowing the sample to diffuse on the smooth, level surface. The CLSM should diffuse into a circular shape having an approximate diameter of not less than 8 inches.

3.5.3 Test Cylinders

A set of (6) 6x12 single use plastic or wax card board test cylinders ASTM C39 except as noted cast 1 set for the initial 50 cubic yards of material placed and then for each 100 cubic yards of CLSM thereafter. Fill to overflowing, strike off, and then tap sides lightly. Use high strength gypsum plasters for capping. Test samples shall not be rodded or vibrated. Cylinders shall be stored in location which undergoes same exposure conditions as the concrete they represent. Extrusion shall not be used to remove samples from the cylinders. Caution should be exercised in moving and transporting cylinders, as the low strength CLSM is fragile and can only withstand minimal jarring.

~~PART 4 BASIS FOR PAYMENT / METHOD OF MEASUREMENT~~

~~CLSM shall be measured in cubic yards as computed from the batch weights of solid materials incorporated into the work. Payment will be made at the contract unit price per cubic yard. This shall be compensated in full for all costs of producing and furnishing the CLSM and for all costs of forming, plugging, placing, venting, protecting as required except for such costs that are specifically compensated for under the "CHANGES" clause of the CONTRACT CLAUSES. Payment will not be made for material not used, or wasted.~~

-- End of Section --

SECTION 03450

PRECAST ARCHITECTURAL CONCRETE

1 GENERAL

1.1 REFERENCES

The publications listed below form a part of this specification to the extent referenced. The publications are referred to in the text by basic designation only.

AMERICAN CONCRETE INSTITUTE (ACI)

ACI 211.1	(1991) Standard Practice for Selecting Proportions for Normal, Heavyweight, and Mass Concrete
ACI 211.2	(1991) Standard Practice for Selecting Proportions for Structural Lightweight Concrete
ACI 315	(1992) ACI Detailing Manual: Section Details and Detailing of Concrete Reinforcement
ACI 318/318R	(1989; Rev 1992; Errata) Building Code Requirements for Reinforced Concrete

AMERICAN SOCIETY FOR TESTING AND MATERIALS (ASTM)

ASTM A 416	(1990a) Steel Strand, Uncoated Seven-Wire for Prestressed Concrete
ASTM C 494	(1992) Chemical Admixtures for Concrete
ASTM C 672	(1992) Standard Test Method for Scaling Resistance of Concrete Surfaces Exposed to Deicing Chemicals
ASTM C 1017	(1992) Chemical Admixtures for Use in Producing Flowing Concrete

AMERICAN WELDING SOCIETY (AWS)

AWS D1.1	(1994) Structured Welding Code - Steel

PRECAST/PRESTRESSED CONCRETE INSTITUTE (PCI)

PCI Mnl-116	(1985) Manual for Quality Control for Plants and Production of Precast and Prestressed Concrete Products
PCI Mnl-117	(1977) Manual for Quality Control for Plants and Production of Architectural Precast Concrete Products

PCI Mnl-122 (1989) Architectural Precast Concrete

1.2 GENERAL REQUIREMENTS

Precast concrete units shall be designed and fabricated by an experienced and acceptable precast concrete manufacturer. The manufacturer shall have been regularly and continuously engaged in the manufacture of precast concrete work similar to that indicated on the drawings for at least 3 years. Precast work shall be coordinated with the work of other trades.

1.3 DESIGN

1.3.1 Standards and Loads

Precast unit design shall conform to ACI 318/318R and PCI Mnl-122. Design loads for precast concrete shall be as determined from the drawings. A differential temperature of 100 degrees F between interior and exterior faces of the units, shall be considered in the design. Stresses due to restrained volume change caused by shrinkage and temperature differential, handling, transportation and erection shall be accounted for in the design.

1.3.2 Connections

Connection of units to other members, or to other units shall be of the type and configuration per manufacturer. The design and sizing of connections for all design loads shall be by the Contractor per 1997 UBC.

1.3.3 Concrete Strength

Precast concrete units shall have a 28-day compressive strength of 5000 psi.

1.3.4 Concrete Proportion

Selection of proportions for concrete shall be based on the methodology presented in ACI 211.1 for normal weight concrete and ACI 211.2 for lightweight concrete. The concrete proportion shall be developed using the same type and brand of cement, the same type and gradation of aggregates, and the same type and brand of admixture that will be used in the manufacture of precast concrete units for the project. Calcium chloride shall not be used in precast concrete and admixtures containing chloride ions, nitrates, or other substances that are corrosive shall not be used in prestressed concrete.

1.3.5 Calculations

Calculations for design of members and connections not shown shall be made by a professional engineer experienced in the design of precast architectural concrete. Calculation shall include the analysis of member for lifting stresses and the sizing of the lifting inserts.

1.4 SUBMITTALS

Government approval is required for submittals with a "GA" designation; submittals having an "FIO" designation are for information only. The following shall be submitted in accordance with Section 01330 SUBMITTAL PROCEDURES:

SD-01 Data

Calculations; GA.

Design calculations, prior to the manufacture of any precast architectural concrete units for the project.

Mix Design; GA.

A statement giving the maximum nominal coarse aggregate size, the proportions of all ingredients and the type and amount of any admixtures that will be used in the manufacture of each strength and type of concrete, prior to commencing operations. The statement shall be accompanied by test results from an approved testing laboratory, certifying that the proportions selected will produce concrete of the properties required. No substitutions shall be made without additional tests to verify that the concrete properties are satisfactory.

SD-04 Drawings

Architectural Concrete System; GA.

Detail drawings showing details in accordance with ACI 315 and ACI 318/318R, including installation details. Detail drawings shall indicate separate identification marks for each different precast unit, location of units in the work, elevations, fabrication details, welding details, reinforcement, connections, dimensions, interface with adjacent members, blocking points for units stored at the precast concrete plant or at the jobsite, lifting points and special handling instructions in sufficient detail to cover manufacture, handling, and erection.

SD-09 Reports

Materials; FIO.

Certified copies of test reports including all test data and all test results. Tests for compressive strength of concrete shall be performed by an approved independent commercial testing laboratory, except that compressive strength tests for initial prestress may be performed in the manufacturer's plant laboratory.

SD-14 Samples

Precast Concrete Units; GA.

A full-size mock-up, maintained at the precast concrete manufacturer's plant until approval by the Contracting Officer for removal or incorporating in the project. The mock-up shall be used to establish quality and acceptance of precast units to be used on the project, and shall consist of three or more units, showing the exterior finish (matrix color, surface color, surface texture), panel back finish, edge treatment, joint treatment, reinforcement, anchorage insert, lifting inserts, and other accessories. Mockup shall also include typical joints, including exterior corner joints and joints between units.

SD-18 Records

Manufacturer's Qualifications; FIO.

A statement giving the qualifications of the precast concrete manufacturer and of the installers, prior to commencing operations.

1.5 STORAGE AND INSPECTION AT MANUFACTURER'S PLANT

Precast units temporarily stored at the manufacturer's plant shall be protected from damage in accordance with PCI Mnl-117 and PCI Mnl-122. Immediately prior to shipment to the jobsite, all precast concrete units shall be inspected for quality to insure all precast units conform to the requirements specified. Inspection for quality will include but not necessarily be limited to the following elements; color, texture, dimensional tolerances, chipping, cracking, staining, warping and honeycombing. All defective precast concrete units shall be replaced or repaired as approved.

1.6 HANDLING AND STORAGE

Precast units shall be delivered to the site with delivery scheduled to avoid excessive build-up of units in storage at the site. Upon delivery to the jobsite all precast units shall be inspected for quality as specified in paragraph STORAGE AND INSPECTION AT MANUFACTURER'S PLANT. If the precast units cannot be unloaded and placed directly into the work, they shall be stored on site, off the ground and protected from weather, marring, or overload. Precast units shall be handled in accordance with manufacturer's instructions.

1.7 #.1 TECHNICAL SERVICE FOR CONCRETE SEALER

The service of a technical representative of the sealer manufacturer shall be obtained to oversee surface preparation, and all aspects of material handling, mixing, application, finishing and curing until in the opinion of the Contracting Officer all aspects of the application are adequately controlled.

2 PRODUCTS

2.1 MATERIALS

Except as otherwise specified, material shall conform to Section 03300CONCRETE FOR BUILDING CONSTRUCTION and Section 03200 CONCRETE REINFORCEMENT.

2.1.1 Reinforcing Steel

Reinforcing steel shall be galvanized if clearance to an exterior face is 1 inch or less.

2.1.2 Tie Wire

Tie wire shall be soft monel or 18-8 stainless steel.

2.1.3 Inserts

Inserts shall be manufacturer's standard, suited for the application.

2.1.4 Plates, Angles, Anchors and Embedments

Material shall be as specified in PCI Mnl-117. Steel items, other than stainless, shall be coated with a rust-inhibiting paint or shall be hot-dip galvanized. Steel items, including items embedded in concrete, shall be either stainless steel or hot dip galvanized steel.

2.1.5 Form Release Agent

Release agent shall be manufacturer's standard nonstaining type.

2.1.6 Admixtures

Admixtures shall conform to ASTM C 494. Plasticizing admixture, if used, shall conform to ASTM C 1017.

2.2 PRECAST CONCRETE UNITS

Precast concrete units shall be manufactured and cured in accordance with the applicable provisions of PCI Mnl-117. Units shall be manufactured within the allowable tolerances given in PCI Mnl-117 and PCI Mnl-122.

2.2.1 Formwork

Forms shall be steel of adequate thickness, braced, stiffened, anchored and aligned to produce precast architectural concrete units within required dimensional tolerances. Forms shall be sufficiently rigid to provide dimensional stability during handling and concrete placement and consolidation. Fiberglass-reinforced plastic, plastic coated wood, elastomeric or other nonabsorptive material shall be used for making tight joints and rustication pieces.

2.2.2 Reinforcement

Fabrication and placement of reinforcement shall conform to the details shown on the approved detail drawings and PCI Mnl-117.

2.2.3 Embedded Accessories

Anchors, inserts, lifting devices, and other accessories which are to be embedded in the precast units shall be furnished and installed in accordance with the approved detail drawings. Embedded items shall be accurately positioned in their designed location, and shall have sufficient anchorage and embedment to satisfy design requirements.

2.2.4 Stripping

Precast concrete units shall not be removed from forms until units develop sufficient strength to safely strip the formwork and to remove the precast concrete units from the forms to prevent damage to the units from overstress or chipping.

2.2.5 Identification

Each precast concrete unit shall be marked to correspond to the identification marks for each different precast unit shown on the detail drawings.

2.2.6 Finishes

2.2.6.1 Exposed Surfaces

Surfaces of precast units exposed to view or surfaces indicated to be finished shall be finished as follows: light sandblast finish.

2.2.6.2 Other Surfaces

Surfaces of precast units not exposed to view or not otherwise indicated to be finished shall be finished in accordance with Section 03300 CONCRETE FOR BUILDING CONSTRUCTION.

2.3 #.1 CONCRETE SEALER

The concrete sealer shall be a silane or siloxane based material, in an isopropanol or alcohol. The sealer shall be a low viscosity, clear, nonstaining, penetrating material specifically formulated for use on concrete exterior surfaces. The sealer shall not stain or alter the surface appearance or texture. The sealer shall contain at least 20 percent silane or siloxane solids. The sealer shall chemically bond with the concrete forming a hydrophobic surface which is not a barrier to water vapor, and will provide a highly effective barrier to liquid water and water borne contaminants. The sealer shall block water absorption of the treated surface, provide a barrier to water, rain and other precipitation, dirt, and air contaminants. The sealer shall improve the freeze/thaw resistance of the treated surfaces, and shall be tested for freeze/thaw durability in accordance with ASTM C 672, and shall have a rating of NO SCALING after 50 test cycles. The concrete sealer shall be certified by the manufacturer as conforming to the specified requirements, and as being suitable for the intended application.

3 EXECUTION

3.1 ERECTION

Precast units shall be erected in accordance with the detail drawings and without damage to other units or to adjacent members. Units shall be set true to alignment and level, with joints properly spaced and aligned both vertically and horizontally. Erection tolerances shall be in accordance with the requirements of PCI Mnl-117 and PCI Mnl-122. As units are being erected, shims and wedges shall be placed as required to maintain correct alignment. After final attachment, precast units shall be grouted as shown. After erection, welds and abraded surfaces of steel shall be cleaned and touched-up with a zinc-rich paint. Welds shall be made by a certified welder in accordance with the manufacturer's erection drawings. Pickup points, box outs, inserts, and the like shall be finished to match adjacent areas after erection. Erection of precast units shall be supervised and performed by workmen skilled in this type of work. Welding and the qualifications of welders shall be in accordance with AWS D1.1.

3.2 JOINT SEALING

Joint sealing shall be as specified in Section 07920 CALKING AND SEALANTS.

3.3 CLEANING

Not sooner than 72 hours after joints are sealed, faces and other exposed surfaces of precast concrete discolored during erection shall be cleaned to remove dirt and stains by dry scrubbing with a stiff fiber brush, wetting the surface and vigorous scrubbing of the finish with a stiff fiber brush followed by additional washing, or by chemical cleaning compounds such as detergents or other commercial cleaners. Commercial cleaners shall be used in accordance with the manufacturer's recommendations. Cleaning procedure shall be performed on a designated test area and shall be approved prior to proceeding with cleaning work. Discolorations which cannot be removed by these procedures, shall be considered defective work. Cleaning work shall be done when temperature and humidity conditions are such that surfaces dry rapidly. Care shall be taken during cleaning operations to protect adjacent surfaces from damage.

3.4 PROTECTION OF WORK

Precast units shall be protected against damage from subsequent operations.

3.5 DEFECTIVE WORK

Precast concrete units damaged during erection shall be repaired as soon after occurrence as possible or replaced, as directed, using approved procedures. All repairs to precast concrete units shall match the adjacent surfaces in color and texture and shall be as approved. Unless otherwise approved, repair procedures shall conform to [PCI Mnl-116 and] PCI Mnl-117.

3.6 #.1 CONCRETE SEALER

The concrete sealer shall be within the manufacturer's recommended temperature range during application. The equipment and methods used in preparing, application, and curing the sealer shall conform to the manufacturer's recommendation, and shall be subject to specific approval. Concrete sealer shall not be used on surfaces that are to receive any subsequent treatment depending on adhesion or bonding to the masonry. The sealer selected shall be compatible with any subsequent paint, roofing, waterproofing or flooring specified. Surfaces of joints shall be protected as required by temporarily covering joint surfaces to prevent entry of the concrete sealer. The sealer shall be applied in a two-coat continuous operation by mechanical spraying equipment, at a uniform coverage in accordance with the manufacturer's printed instructions. The sealer application rate for each coat shall conform to the manufacturer's recommendations, and shall provide a complete uniform coverage at the manufacturer's maximum application rate (i.e. heaviest coating). The time between each coat application shall conform to the manufacturer's recommendation. The surfaces to receive sealer shall be clean, dry, and subject to approval prior to application of the sealer. The sealer shall be prepared, applied, cured and protected in accordance with the manufacturer's recommendations. Surfaces which have been subjected to rainfall, or other precipitation within the manufacturer's recommended curing period after the sealer has been applied shall be resprayed by the method and at the coverage recommended by manufacturer. Surfaces coated with the masonry sealer shall

be kept free of foot and vehicular traffic, and from other sources of abrasion, contamination, and damage during the sealer manufacturer's recommended curing period.

Some types of sealers have a low flash point, are highly flammable, and may be explosive or potentially dangerous in the uncured state. Smoking, open flames, and other potential sources of ignition within the manufacturer's recommended clearance distance shall be specifically prohibited. Approved signs and other warning devices shall be the Contractor's responsibility and shall be visible from all directions for the required distance. The Contractor shall assemble and maintain appropriate warning signs and fire safety equipment around storage and handling areas, treated buildings, and buildings to be treated during all sealer handling, application, and curing, and as long after as the hazard potential persists. The Contractor shall be responsible for all safety aspects, material handling and supervision.

SECTION 04255

NONBEARING MASONRY VENEER/STEEL STUD WALLS

1 GENERAL

1.1 REFERENCES

The publications listed below form a part of this specification to the extent referenced. The publications are referred to in the text by the basic designation only.

AMERICAN INSTITUTE OF STEEL CONSTRUCTION (AISC)

AISC-02	(1989) Manual of Steel Construction Allowable Stress Design

AMERICAN IRON AND STEEL INSTITUTE (AISI)

AISI SG-671	(1986; Addenda 1989; Errata Nov 30, 1990) Cold-Formed Steel Design Manual: Part I - Design of Cold-Formed Steel Structural Members

AMERICAN SOCIETY FOR TESTING AND MATERIALS (ASTM)

ASTM A 36	(1994) Structural Steel
ASTM A 82	(1995a) Steel Wire, Plain, for Concrete Reinforcement
ASTM A 123	(1989a) Zinc (Hot-Dip Galvanized) Coatings on Iron and Steel Products
ASTM A 153	(1996) Zinc Coating (Hot-Dip) on Iron and Steel Hardware
ASTM A 446	(1991) Steel Sheet, Zinc-Coated (Galvanized) by the Hot-Dip Process, Structural (Physical) Quality
ASTM A 525	(1991b) General Requirement for Steel Sheet, Zinc-Coated (Galvanized) by the Hot-Dip Process
ASTM A 653	(1995) Steel Sheet, Zinc-Coated (Galvanized) or Zinc-Iron Alloy-Coated (Galvanized) by the Hot-Dip Process
ASTM C 67	(1994) Sampling and Testing Brick and Structural Clay Tile
ASTM C 79	(1994) Gypsum Sheathing Board
ASTM C 91	(1995) Masonry Cement

ASTM C 216	(1995) Facing Brick (Solid Masonry Units Made from Clay or Shale)
ASTM C 270	(1995a) Mortar for Unit Masonry
ASTM C 494	(1992) Chemical Admixtures for Concrete
ASTM C 578	(1992) Rigid, Cellular Polystyrene Thermal Insulation
ASTM C 591	(1985) Unfaced Preformed Rigid Cellular Polyurethane Thermal Insulation
ASTM C 665	(1994) Mineral-Fiber Blanket Thermal Insulation for Light Frame Construction and Manufactured Housing
ASTM C 672	(1992) Standard Test Method for Scaling Resistance of Concrete Surfaces Exposed to Deicing Chemicals
ASTM C 744	(1973; R 1985) Prefaced Concrete and Calcium Silicate Masonry Units
ASTM C 780	(1994) Preconstruction and Construction Evaluation of Mortars for Plain and Reinforced Unit Masonry
ASTM C 954	(1986) Steel Drill Screws for the Application of Gypsum Board or Metal Plaster Bases to Steel Studs from 0.033 in. (0.84 mm) to 0.112 in. (2.84 mm) in Thickness
ASTM C 955	(1995) Load-Bearing (Transverse and Axial) Steel Studs, Runners (Track), and Bracing or Bridging for Screw Application of Gypsum Board and Metal Plaster Bases
ASTM C 1002	(1993) Steel Drill Screws for the Application of Gypsum Board or Metal Plaster Bases
ASTM C 1072	(1994) Measurement of Masonry Flexural Bond Strength
ASTM D 226	(1994) Asphalt-Saturated Organic Felt Used in Roofing and Waterproofing
ASTM D 1056	(1991) Flexible Cellular Materials - Sponge or Expanded Rubber
ASTM D 1330	(1985; R 1990) Rubber Sheet Gaskets
ASTM D 1667	(1976; R 1990) Flexible Cellular Materials - Vinyl Chlorine Polymers and Copolymers (Closed-Cell Foam)
ASTM D 2103	(1992) Polyethylene Film and Sheeting

AMERICAN SOCIETY OF HEATING, REFRIGERATING AND AIR-CONDITIONING (ASHRAE)

ASHRAE-03 (1993) Handbook, Fundamentals I-P Edition

AMERICAN WELDING SOCIETY (AWS)

AWS D1.3 (1992) Structural Welding Code - Sheet Steel

DEPARTMENT OF COMMERCE (DOC)

DOC PS 1 (1983) Construction and Industrial Plywood

1.2 SUBMITTALS

Government approval is required for submittals with a "GA" designation; submittals having an "FIO" designation are for information only. The following shall be submitted in accordance with Section 01330 SUBMITTAL PROCEDURES:

SD-01 Data

Masonry Veneer/Steel Stud Wall System; GA.

Calculations or tabular data as necessary, demonstrating the structural performance of the cold-formed steel framing system for the specified loadings and deflection criteria in accordance with the provisions of AISI SG-671. Calculations demonstrating the structural adequacy of undesignated steel lintels and shelf angles for the calculated gravity loadings being supported. This analysis shall be in accordance with AISC-02. Test results demonstrating that the veneer anchors are structurally adequate to resist the specified loadings shall be submitted for approval. Minimum out of plane wind loading shall be 35 psf pressure or suction.

Calculations demonstrating the insulation shown on the Detail Drawings provides the specified U-value for heat transmission of the completed exterior wall construction shall be submitted for approval. This analysis shall be in accordance with ASHRAE-03. Manufacturer's descriptive data and installation instructions for the insulation, the vapor barrier and the moisture barrier.

SD-04 Drawings

Masonry Veneer/Steel Stud Wall System; GA.

Details of cold-formed steel framing and support around openings, including framing connections, undesignated steel lintels and steel shelf angles, attachment to other building elements and bridging. Drawings shall indicate thickness, material, dimensions, protective coatings, and section properties of all steel studs and other cold-formed steel framing members and of all steel lintels and shelf angles used in exterior wall framing. Drawings shall also indicate size and type of all fasteners including size and type of all welds.

SD-14 Samples

Expansion Joint Materials; GA. Brick Veneer Units; GA. Sample Panel; GA.

A portable panel, approximately 2 feet by 2 feet,containing approximately 24 brick veneer units to establish the range of color and texture. One of each type of masonry veneer anchor used.

SD-13 Certificates

Brick Veneer Units; FIO. Joint Reinforcement; FIO. Expansion Joint Materials; FIO. Insulation; FIO. Gypsum Sheathing; FIO. Moisture Barrier; FIO. Vapor Barrier; FIO. Veneer Anchors; FIO. Welders Qualification; FIO.

Certificates stating that the materials and welders meet the requirements herein specified. Each certificate shall be signed by an authorized certification official and shall include their organization and position and shall identify the products covered under their certifying signature.

1.3 SAMPLE PANEL

After the material samples are approved and prior to starting masonry work, a sample masonry panel shall be built on the project site where directed. The sample panel shall be not less than 6 feet long by 4 feet high. The panel shall be of typical wall thickness for the construction represented. The panel shall show color range, texture, bond pattern, expansion joints, and cleaning of the masonry as required in the work. The panel shall also show cold-formed steel framing, insulation, gypsum wallboard, gypsum sheathing, moisture barrier, vapor barrier, veneer anchors, joint reinforcement, undesignated steel shelf angles, flashing and weep holes. The approved sample panel shall be used as a standard of workmanship required in the actual installation. The sample panel shall be protected from weather and construction operations and shall not be removed until the masonry veneer/steel stud wall work has been completed and accepted.

1.4 DELIVERY, HANDLING AND STORAGE

Materials shall be delivered and handled in a manner to avoid chipping, breakage, bending or other damage and to avoid contact with soil or other contaminating materials. The masonry products shall be stored off the ground and protected from inclement weather. Cementitious materials shall be delivered in unopened containers plainly marked and labeled with manufacturer's names and brands. Cementitious materials shall be stored in dry, weather-tight enclosures or covers. Sand and other aggregates shall be stored in a manner to prevent contamination or segregation and under a weather-tight covering permitting good air circulation. Finish of the framing members shall be maintained at all times, using an approved high zinc dust content galvanizing repair paint whenever necessary to prevent the formation of rust. Insulation, moisture barrier, and gypsum sheathing shall be stored in dry, well ventilated, weather-tight areas protected from sunlight and excessive heat. Air infiltration type vapor barrier shall be stored in accordance with the manufacturer's recommendations.

1.5 EFFLORESCENCE TESTS

Efflorescence tests shall be performed by an approved commercial testing laboratory. Sampling for the tests shall be the responsibility of the Contractor. Brick, grout, and mortar shall be sampled and tested for

efflorescence in accordance with ASTM C 67 and the rating shall be: "not effloresced".

1.6 #.1 TECHNICAL SERVICE FOR MASONRY SEALER

The service of a technical representative of the sealer manufacturer shall be obtained to oversee surface preparation, and all aspects of material handling, mixing, application, finishing and curing until in the opinion of the Contracting Officer all aspects of the application are adequately controlled.

2 PRODUCTS

2.1 VENEER WYTHE

2.1.1 Clay or Shale Brick

Clay or shale brick veneer shall be masonry units conforming to ASTM C 216, Type FBS. Color range and texture shall be as indicated and shall conform to the approved sample. Grade SW shall be used for all brickwork. Brick unit sizes shall be as shown.

2.2 MORTAR

Mortar shall conform to ASTM C 270, Type S. Mortar mix shall be based on proportion specifications. Laboratory testing of mortar shall be in accordance with the preconstruction evaluation of mortar section of ASTM C 780. Cement shall have a low alkali content and be of one brand. Aggregates shall be from one source.

2.2.1 Masonry Cement

Masonry cement in conformance with ASTM C 91 may be used in the mortar. When using a masonry cement a comparative test will be performed between a portland cement-lime mortar and the masonry cement mortar proposed for the project to evaluate the ASTM C 1072 bond and the ASTM C 780compressive strength of the two mixes. The test shall be conducted with the proposed masonry units for the project. The masonry cement mortar will be acceptable if the bond and compressive strength values are equal to or higher than the portland cement-lime mix. The air-content of the masonry cement shall be limited to 12 percent maximum.

2.2.2 Admixtures

In cold weather, a non-chloride based accelerating admixture may be used subject to approval. Accelerating admixtures shall be non-corrosive, contain less than 0.2 percent chlorides, and conform to ASTM C 494, Type C.

2.3 JOINT REINFORCEMENT

Joint reinforcement shall be of steel wire conforming to ASTM A 82. Fabrication shall be by welding. Tack welding will not be permitted. Reinforcement shall be zinc-coated after fabrication in accordance with ASTM A 153, Class B-2. Joint reinforcement shall consist of at least 1 continuous longitudinal wire in the veneer wythe. Minimum wire cross section shall be 0.017 square inches (9 gage). Joint reinforcement shall be

placed in all horizontal mortar joints to receive anchor ties. Reinforcement shall be continuous with lap splices between ties.

2.4 COLD-FORMED STEEL FRAMING

Cold-formed framing shall consist of steel studs, top and bottom tracks, runners, horizontal bridging, and other cold-formed members and other accessories. The cold-formed framing system shall be designed in accordance with AISI SG-671. The steel studs and other cold-formed steel framing members within the wall shall be designed to resist the entire wind and seismic loadings acting inward and outward perpendicular to the wall system without exceeding a deflection of 1/720 times the vertical stud span and AISI SG-671 allowable stresses. To prevent the masonry wythe from cracking due to "hard spot" support at doors, windows, and other openings, the completed design of the cold-formed steel system shall result in bending stiffness and deflections at openings that are compatible with those away from wall openings. Design calculations shall be submitted for approval. All members and components made of sheet steel shall be hot-dip galvanized in accordance with ASTM A 653 with a minimum coating thickness of G 60. Framing covered herein shall be used only in framing the exterior masonry veneer steel stud wall system as indicated on the drawings. Metal framing for interior partitions are specified in Section 09250 GYPSUM WALLBOARD.

2.4.1 Steel Studs

Studs will conform to ASTM A 653, Grade A, having a minimum yield strength of 33,000 psi. Studs shall be cold-formed from 0.048 inch minimum base metal thickness steel of 18 gage steel. The base metal thickness of studs shall be 0.0478 inches except where noted otherwise on the construction drawings and where necessary to meet the performance criteria. Studs that vertically support the masonry veneer, through undesignated shelf angles, shall have a minimum thickness of 0.0598 inches (16 gage) or heavier. Studs shall be 6 inches deep and shall have a minimum flange width of 1-5/8 inches with a minimum return lip of .563 inches. Section properties shall be determined in accordance with AISI SG-671.

2.4.2 Runners, Tracks, Bridging and Accessories

All cold-formed steel sheet framing members, components, and accessories, other than the steel studs, shall conform to ASTM C 955 and be of steel conforming to ASTM A 653, Grade A, having a minimum yield strength of 33,000 psi.

2.5 INSULATION

2.5.1 Blanket Insulation

Insulation placed between the steel studs shall be batt or blanket type mineral wool conforming to ASTM C 665, Type III.

2.5.2 Fire Safing Insulation

Mineral fiber material, 4-pcf density, semi-rigid blanket.

2.6 GYPSUM WALLBOARD

Gypsum wallboard that is installed on the interior side of the cold-formed steel framing system shall be as specified in Section 09250 GYPSUM WALLBOARD.

2.7 EXTERIOR SHEATHING

Gypsum sheathing that is installed on the exterior side of the cold-formed steel framing system shall have a minimum thickness of 1/2 inch and shall be 4 feet wide. Gypsum sheathing shall conform to ASTM C 79. Gypsum sheathing shall have a water-resistant gypsum core with a water-repellent paper firmly bonded to the core.

2.8 MOISTURE PROTECTION

2.8.1 Moisture Barrier

The moisture barrier shall be 15-lb asphalt-saturated felt conforming to ASTM D 226 or D 250, Type II (No. 30) or other similar materials as approved by the Contracting Officer.

2.8.2 Vapor Retarder

The vapor retarder shall be polyethylene film conforming to ASTM D 2103, 6 mil minimum thickness.

2.8.3 Staples

Staples for attaching the moisture barrier to the exterior sheathing shall be the type and size best suited to provide a secure connection. Staples shall be made from either galvanized steel or stainless steel wire.

2.8.4 Joint Tape

Tape for sealing the joints in the vapor retarder shall be laminated tape with pressure sensitive adhesive as recommended by the manufacturer of the polyethylene film.

2.9 VENEER ANCHORS

Anchor assemblies for the attachment of the masonry veneer to the cold-formed steel framing, structural steel members and concrete floor slabs will be designed for 35 psf wind load. Anchors will transfer the design loadings from the masonry veneer to the cold-formed steel framing system or other support without exceeding the allowable stresses and deflections in the anchors in both tension and compression. Length of anchor wires shall be such that the outermost wires lie between 1-1/4 inch from each face of the masonry veneer. Anchors wires if used shall not have drips. Wires for veneer anchors shall be rectangular or triangular hoops formed from 3/16 inch diameter steel wire conforming to ASTM A 82. Anchor assemblies including wires and anchor plates shall be hot-dip galvanized conforming to ASTM A 153, Class B-2. The veneer anchor shall have a minimum capacity of 200 pounds. The load-displacement capacity of each veneer anchor, both in direct pull-out for tension and compression, shall not be less than 2000 pounds per inch (or a deflection of 0.05 inches per 100 pounds of load in tension or compression). In the direction perpendicular to the masonry

veneer, the anchor assembly shall have a maximum play of 1/16 inch. The veneer anchor shall be fabricated so as to positively engage the continuous horizontal joint reinforcement.

2.10 CONNECTIONS

Screws, bolts and anchors shall be hot-dip galvanized in accordance with ASTM A 123 or ASTM A 153 as appropriate.

2.10.1 Framing Screws, Bolts and Anchors

Screws, bolts and anchors used in the assembly of the cold-formed steel framing system shall be as required by design of the framing system for the specified loading. Screw, bolt and anchor sizes shall be shown on the detail shop drawings.

2.10.2 Welding

All welded connections shall be designed and all welding shall be performed in accordance with AWS D1.3, as modified by AISI SG-671. All welders shall be qualified in accordance with AWS D1.3. All welds shall be cleaned and touched-up with zinc-rich paint. Welders shall take appropriate ventilation measures when welding galvanized metals.

2.10.3 Veneer Anchor Screws

Screws for attachment of the veneer anchors to the cold-formed steel framing members shall be as required by design to provide the needed pullout load capacity but not less than No. 12. Screws shall be shown on the detail shop drawings. The length of screws shall be such that the screws penetrate the holding member by not less than 5/8 inch.

2.10.4 Gypsum Sheathing Screws

Screws for attachment of gypsum sheathing to cold-formed steel framing shall conform to ASTM C 1002, Type S.

2.11 SYNTHETIC RUBBER WASHERS

Synthetic rubber washers for placement between veneer anchors and the moisture barrier on the outside face of the exterior sheathing shall conform to ASTM D 1330, Grade I.

2.12 EXPANSION JOINT MATERIAL

Expansion joint materials shall be premolded type closed-cell cellular rubber conforming to ASTM D 1056 or closed-cell vinyl or polyvinyl chloride conforming to ASTM D 1667.

2.13 FLASHING

Copper or stainless steel flashing shall conform to the requirements in Section 07600 SHEET METALWORK, GENERAL. Flashing shall be supplied in a continuous sheet extending from the exterior sheathing across the cavity and through the masonry veneer as shown.

2.14 UNDESIGNATED STEEL LINTELS AND SHELF ANGLES

Steel shapes used for undesignated lintels and shelf angles shall conform to ASTM A 36. Lintels and shelf angles shall be provided at all openings shown, except where support is explicitly provided on the drawings. These steel members shall be hot-dip galvanized in accordance with ASTM A 123.

2.15 MASONRY SEALER

The masonry sealer shall be a silane or siloxane based material, in an isopropanol or alcohol. The sealer shall be a low viscosity, clear, nonstaining, penetrating material specifically formulated for use on concrete and masonry exterior surfaces. The sealer shall not stain or alter the surface appearance or texture. The sealer shall contain at least 20 percent silane or siloxane solids. The sealer shall chemically bond with the masonry forming a hydrophobic surface which is not a barrier to water vapor, and will provide a highly effective barrier to liquid water and water borne contaminants. The sealer shall block water absorption of the treated surface, provide a barrier to water, rain and other precipitation, dirt, and air contaminants. The sealer shall improve the freeze/thaw resistance of the treated surfaces, and shall be tested for freeze/thaw durability in accordance with ASTM C 672, and shall have a rating of NO SCALING after 50 test cycles. The masonry sealer shall be certified by the manufacturer as conforming to the specified requirements, and as being suitable for the intended application.

2.16 #.1 CAULKING AND SEALANTS

Caulking and sealants shall be as specified in Section 07920 JOINT SEALING.

3 EXECUTION

3.1 GENERAL INSTALLATION REQUIREMENTS

Wall sections, types of construction and dimensions shall be as shown. Metal door and window frames and other special framing shall be built and anchored into the wall system as indicated.

3.2 STEEL STUD WALL FRAMING

The top track of the stud wall system shall be slip jointed to accommodate vertical deflections of the supporting members as shown on the shop drawings. Where stud walls run by floor levels and framing; vertical slide clips shall be used at each stud, to the framing as shown to resist the specified wind or seismic loads. Top and bottom tracks shall be securely anchored to resist track rotation by alternating fastener locations to provide two rows, one row near each track flange as shown on the shop drawings. Both flanges of all steel studs shall be securely fastened with screws to the flanges of the top and bottom tracks as shown on the shop drawings. All details for affixing steel studs to runners and all other sheet steel framing members along with all details necessary for anchorage of the steel stud wall system to the building structural systems shall be shown on the shop drawings. Horizontal bridging shall be provided as necessary and no less than the minimum recommended by the steel stud manufacturer. Studs shall be spaced 16 inches on center or as indicated on the drawings. Coordinate stud spacing with sheathing and anchor requirements. At wall openings for doors, windows and other similar

features, the framing system shall provide for the installation and anchorage of the required subframes or finish frames. Steel frames shall be securely attached through built-in anchors to the nearest stud on each side of the opening with self-drilling screws. Double studs shall be provided at both jambs of all door openings. Door frames and other built-in items shall be grouted solid.

3.3 UNDESIGNATED STEEL SHELF ANGLES

Unless otherwise shown, undesignated steel shelf angles shall be provided in segments that do not exceed 10 feet in length. Where required at building corners, shelf angle segments shall be mitered and securely attached together by welding with each segment no less than four feetwhere possible. Elsewhere, shelf angle segments shall not be connected together but instead shall be installed with 1/4 inch wide gaps between the segments. Fabrication and erection tolerances shall be in accordance with the AISC Code of Standard Practice, as indicated in AISC-02. Shelf angle lintels shall extend 8 inches beyond the edge of the opening unless otherwise indicated.

3.4 INSULATION

The actual installed thickness of insulation shall provide a maximum thermal R of 19 for the completed exterior wall construction as determined in accordance with ASHRAE-03. Insulation thickness shall be as shown on the approved drawings. Installation, except as otherwise specified or shown, shall be in accordance with the manufacturer's instructions which shall be approved by the Contracting Officer. Insulation shall be installed between wall framing members. Rigid insulation shall be installed in accordance with the manufacturer's instructions with proper connections through the insulation to prevent the insulation from carrying loads directly. Insulation with facings shall be secured to the sides of the framing members to provide a continuous seal and so that the entire weight of the insulation is carried by the framing members. Where electrical outlets, ducts, pipes, vents or other utility items occur, insulation shall be placed on the dry side of the item away from excessive humidity.

3.4.1 Fire Safing

Install fire safing where indicated. Install with manufacturer's clips for proper fit as required by opening configuration.

3.5 GYPSUM WALLBOARD

Gypsum wallboard shall be installed on the interior face of the cold-formed steel framing system. Installation shall be as specified in Section 09250 GYPSUM WALLBOARD except at vertical slip joints, the gypsum wallboard shall be connected to the vertical studs only so as not to prevent movement at the slip joint.

3.6 EXTERIOR SHEATHING

Sheathing shall be installed on the exterior face of the cold-formed steel framing system with self-drilling screws. Screws shall be located a minimum of 3/8 inch from the ends and edges of sheathing panels and shall be spaced not more than 8 inches on each supporting member except at vertical slip joints, the sheathing should be connected to the vertical studs only so as

not to prevent movement of the slip joint. Edges and ends of gypsum sheathing panels shall be butted snugly with vertical joints staggered to provide full and even support for the moisture barrier. All holes and gaps resulting from abandoned screw installations, from damage to panels, and from cutting and fitting of panels at junctures with doors, windows, foundation walls, floor slabs and other similar locations shall be filled with exterior rubber-base caulk.

3.7 MOISTURE PROTECTION

3.7.1 Moisture Barrier

The asphalt-saturated felt or other approved moisture barrier shall be installed on the outer face of the exterior sheathing. The moisture barrier shall be installed horizontally and shingled with each sheet lapped not less than 6 inches over the sheet below. Vertical end joints shall be lapped not less than 6 inches and shall be staggered. Attachment of the moisture barrier shall be with staples spaced not greater than 16 inches on center or as required by the manufacturer.

3.7.2 Vapor Retarder

A vapor retarder shall be installed between the steel studs and the gypsum wall board. The vapor retarder shall be installed in accordance with the manufacturer's recommendations to form a complete retarder to vapor infiltration. The joints shall be lapped and sealed with tape.

3.8 VENEER ANCHORS

Veneer anchors shall be attached with screws through the sheathing and rigid insulation to the steel studs or other support members at the locations shown. When rigid insulation is used, the method of connecting the veneer anchor through the insulation shall be approved by the Contracting Officer. Veneer anchors shall be installed with the continuous horizontal joint reinforcement positively engaged. Synthetic rubber washers shall be used between the anchor connector plates and the moisture barrier. A clutch torque slip screw gun shall be used on screws attaching veneer anchors to cold-formed steel members. Veneer anchors with corrugated sheet metal or wire mesh members extending across the wall cavity shall not be used. There shall be one veneer anchor for each two square feet of wall and shall be attached to steel studs and other supports with a maximum spacing of 24 incheson center.

3.9 FLASHING

Continuous flashing shall be provided at the bottom of the wall cavity just above grade. Flashing shall also be provided above and below openings at lintels and sills, at shelf angles, and at other location as indicated on the drawings. Flashing shall be as detailed and as specified in Section 07600 SHEET METALWORK, GENERAL. Flashing shall be lapped a minimum of 6 inches at joints and shall be sealed with a mastic as recommended by the flashing manufacturer. Ends over doors, windows and openings shall be turned up and secured. Flashing shall be lapped under the moisture barrier a minimum of 6 inches and securely attached to the gypsum sheathing. Flashing shall extend through the exterior face of the masonry veneer and turned down to form a drip.

3.10 MASONRY VENEER

Exterior masonry wythes shall be constructed to the thickness indicated on the drawings. A cavity consisting of a minimum width air space shown on the drawings. Masonry veneer will not be installed until the exterior sheathing, moisture barrier, veneer anchors and flashing have been installed on the cold-formed steel framing system. Extreme care shall be taken to avoid damage to the moisture barrier and flashing during construction of the masonry veneer. Any portion of the moisture barrier and flashing that is damaged shall be repaired or replaced prior to completion of the veneer. Masonry shall be placed in running bond pattern. Longitudinal reinforcement consisting of at least one continuous galvanized steel wire shall be placed in the veneer wythe. The minimum wire size shall be 9 gage. Vertical joints on alternating courses shall be aligned and kept vertically plumb. Solid masonry units shall be laid in a non-furrowed full bed of mortar, beveled and sloped toward the center of the wythe on which the mortar is placed. Units shall be shoved into place so that the vertical mortar joints are completely full and tight. Units that have been disturbed after the mortar has stiffened shall be removed, cleaned and relaid. Mortar which protrudes more than 1/4 inch into the cavity space shall be removed. Means shall be provided to ensure that the cavity space is kept clean of mortar droppings and other loose debris. Chases and raked-out joints shall be kept free from mortar and debris. Faces of units used in finished exposed areas shall be free from chipped edges, material texture or color defects or other imperfections distracting from the appearance of the finished work. Vertical expansion joints joints shall be located as shown on the contract drawings and spaced not further apart than 50 feet - 0 inches.

3.10.1 Surface Preparation

Surfaces on which masonry is to be laid shall be cleaned of laitance or other foreign material. No units having a film of water shall be laid.

3.10.2 Hot Weather Construction

Temperatures of masonry units and mortar shall not be greater than 120 degrees F when laid. Masonry erected when the ambient air temperature is more than 99 degrees F in the shade and when the relative humidity is less than 50 percent shall be given protection from the direct exposure to wind and sun for 48 hours after the installation.

3.10.3 Cold Weather Construction

Temperatures of masonry units and mortar shall not be less than 40 degrees F when laid. When the ambient air temperature is 32 degrees F or less, masonry veneer under construction shall be protected and maintained at a temperature greater than 32 degrees F for a period of 48 hours after installation. The proposed method of maintaining the temperature within the specified range shall be submitted for approval prior to implementation. No units shall be laid on a surface having a film of frost or water.

3.10.4 Tolerances

Masonry shall be laid plumb, level and true to line within the tolerances specified in TABLE 1. All masonry corners shall be square unless otherwise indicated on the drawings.

TABLE 1

Variation From Plumb

In adjacent units	1/8 inch
In 10 feet	1/4 inch
In 20 feet	3/8 inch
In 40 feet or more	1/2 inch

Variation From Level Or Grades

In 10 feet	1/8 inch
In 20 feet	1/4 inch
In 40 feet or more	1/2 inch

Variation From Linear Building Lines

In 20 feet	1/2 inch
In 40 feet or more	3/4 inch

Variation From Cross Sectional Dimensions Of Walls

Plus	1/2 inch
Minus	1/4 inch

3.10.5 Mixing of Mortar

Mortar shall be mixed in a mechanically operated mortar mixer for at least 3 minutes but not more than 5 minutes. Measurement of ingredients for mortar shall be by volume. Measurement of sand shall be accomplished by the use of a container of known capacity or shovel count based on a container of known capacity. Water shall be mixed with the dry ingredients in sufficient amount to provide a workable mixture which will adhere to the vertical surfaces of the masonry units. Mortar that has stiffened because of loss of water through evaporation shall be retempered by adding water to restore the proper consistency and workability. Mortar that has reached its initial set or that has not been used within 1-1/2 hours shall be discarded.

3.10.6 Cutting and Fitting

Wherever possible, full units shall be used in lieu of cut units. Where cut units are required to accommodate the design, cutting shall be done by masonry mechanics using power masonry saws. Wet-cut units shall be dried to the same surface-dry appearances of uncut units before being placed in the work. Cut edges shall be clean, true and sharp. Openings to accommodate pipes, conduits, and other accessories shall be neatly formed so that framing or escutcheons required will completely conceal the cut edges. Insofar as practicable, all cutting and fitting shall be accomplished while masonry work is being erected.

3.10.7 Masonry Units

When being laid, masonry units shall have suction sufficient to hold the mortar and to absorb water from the mortar, but shall be damp enough to allow the mortar to remain in a plastic state to permit the unit to be leveled and plumbed immediately after being laid without destroying bond. Masonry units with frogging shall be laid with the frog side down and better or face side exposed to view. Masonry units that are cored, recessed or otherwise deformed may be used in sills or in other areas except where deformations will be exposed to view.

3.10.8 Mortar Joints

Mortar joint widths shall be uniform and such that the specified widths are maintained throughout. Joints shall be of thickness equal to the difference between the actual and nominal dimensions of the masonry units in either height or length but in no case shall the joints be less than 1/4 inch nor more than 1/2 inch wide. Joints shall be tooled slightly concave. Tooling shall be accomplished when mortar is thumbprint hard and in a manner that will compress and seal the mortar joint and produce joints of straight and true lines free of tool marks.

3.10.9 Joint Reinforcement

Unless otherwise shown, joint reinforcement shall be spaced at 16 inches on center vertically. Joint reinforcement shall be placed in the same masonry course as veneer anchors; and the anchors shall be designed to accommodate the wire. Joint reinforcement shall be placed so that longitudinal wires are centered in the veneer wythe for solid units. Longitudinal wires shall be fully embedded in mortar for their entire length. Splices in joint reinforcement shall be lapped a minimum of 6 inches. Joint reinforcement must be discontinuous at all veneer control joints. The minimum cover for joint reinforcement is 5/8 inches.

3.10.10 Veneer Expansion Joints

Brick veneer joints shall be provided at the locations shown on the drawings. Details of joints shall be as indicated on the drawings. Joints shall be clean and free of mortar and shall contain only premold control joint material, backer rod and sealant, installed in accordance with Section 07920 CAULKING AND SEALANTS. Horizontal reinforcement shall not extend through the joints.

3.10.11 Weep Holes

Weep holes shall be provided at all flashing locations at intervals of 24 inches. Weep holes shall be placed in head joints just above the flashing. Weep holes shall be formed by leaving head joints open or head joint vents may be used. Weep holes shall be kept free of mortar and other obstructions.

3.10.12 Head Joint Vents

Head joint vents shall be provided near the top of the veneer wythe at the same spacing as the weep holes.

3.10.13 Discontinuous Work

When necessary to temporarily discontinue the work, masonry shall be stepped back for joining when work resumes. Toothing may be used only when specifically approved. Before resuming work, loose mortar shall be removed and the exposed joint shall be thoroughly cleaned. Top of walls subjected to rain or snow shall be covered with nonstaining waterproof covering or membrane when work is not in process. Covering shall extend a minimum of 2 feet down on each side of the wall and be held securely in place.

3.10.14 Cleaning

Mortar daubs or splashings shall be completely removed from finished exposed masonry surfaces before they harden or set up. Before completion of the work, all defects in mortar joints shall be raked out as necessary, filled with mortar, and tooled to match the adjacent existing mortar in the joints. The proposed cleaning method shall be done on the sample wall panel and the sample panel shall be examined for discoloration or stain. If the sample panel is discolored or stained, the method of cleaning shall be changed to ensure that the masonry surfaces in the structure will not be adversely affected. Masonry surfaces shall not be cleaned, other than removing excess surface mortar, until mortar in joints has hardened. Cleaning shall be accomplished with the use of stiff bristle fiber brushes, wooden paddles, wooden scrapers, or other suitable nonmetallic tools. Concrete masonry unit surfaces shall be dry-brushed at the end of each day's work after any required pointing has been done. Efflorescence or other stains shall be removed in conformance with the recommendations of the masonry unit manufacturer. After construction and cleaning, masonry surfaces shall be left clean, free of mortar daubs, stain, and discolorations, including scum from cleaning operations, and will have tight mortar joints throughout. Metallic tools and brushes shall not be used for cleaning.

3.11 MASONRY SEALER

The masonry sealer shall be within the manufacturer's recommended temperature range during application. The equipment and methods used in preparing, application, and curing the sealer shall conform to the manufacturer's recommendation, and shall be subject to specific approval. Masonry sealer shall not be used on surfaces that are to receive any subsequent treatment depending on adhesion or bonding to the masonry. The sealer selected shall be compatible with any subsequent paint, roofing, waterproofing or flooring specified. Surfaces of joints shall be protected as required by temporarily covering joint surfaces to prevent entry of the masonry sealer. The sealer shall be applied in a two-coat continuous operation by mechanical spraying equipment, at a uniform coverage in accordance with the manufacturer's printed instructions. The sealer application rate for each coat shall conform to the manufacturer's recommendations, and shall provide a complete uniform coverage at the manufacturer's maximum application rate (i.e. heaviest coating). The time between each coat application shall conform to the manufacturer's recommendation. The surfaces to receive sealer shall be clean, dry, and subject to approval prior to application of the sealer. The sealer shall be prepared, applied, cured and protected in accordance with the manufacturer's recommendations. Surfaces which have been subjected to rainfall, or other precipitation within the manufacturer's recommended curing period after the sealer has been applied shall be resprayed by the method and at the coverage recommended by manufacturer. Surfaces coated with the masonry sealer shall

be kept free of foot and vehicular traffic, and from other sources of abrasion, contamination, and damage during the sealer manufacturer's recommended curing period.

Some types of sealers have a low flash point, are highly flammable, and may be explosive or potentially dangerous in the uncured state. Smoking, open flames, and other potential sources of ignition within the manufacturer's recommended clearance distance shall be specifically prohibited. Approved signs and other warning devices shall be the Contractor's responsibility and shall be visible from all directions for the required distance. The Contractor shall assemble and maintain appropriate warning signs and fire safety equipment around storage and handling areas, treated buildings, and buildings to be treated during all sealer handling, application, and curing, and as long after as the hazard potential persists. The Contractor shall be responsible for all safety aspects, material handling and supervision.

SECTION 05055

WELDING, STRUCTURAL

1 GENERAL

1.1 REFERENCES

The publications listed below form a part of this specification to the extent referenced. The publications are referred to in the text by basic designation only.

AMERICAN INSTITUTE OF STEEL CONSTRUCTION (AISC)

AISC S335	(1989) Specification for Structural Steel Buildings - Allowable Stress Design and Plastic Design

AMERICAN SOCIETY FOR NONDESTRUCTIVE TESTING (ASNT)

ASNT-01	(1996) Recommended Practice SNT-TC-1A

AMERICAN WELDING SOCIETY (AWS)

AWS A2.4	(1993) Symbols for Welding, Brazing and Nondestructive Examination
AWS A3.0	(1994) Standard Welding Terms and Definitions
AWS D1.1	(1994) Structural Welding Code - Steel
AWS Z49.1	(1994) Safety in Welding and Cutting

1.2 DEFINITIONS

Definitions of welding terms shall be in accordance with AWS A3.0.

1.3 GENERAL REQUIREMENTS

The design of welded connections shall conform to AISC S335 unless otherwise indicated or specified. Material with welds will not be accepted unless the welding is specified or indicated on the drawings or otherwise approved. Welding shall be as specified in this section, except where additional requirements are shown on the drawings or are specified in other sections. Welding shall not be started until welding procedures, welders, welding operators, and tackers have been qualified and the submittals approved by the Contracting Officer. Qualification testing shall be performed at or near the work site. Each Contractor performing welding shall maintain records of the test results obtained in welding procedure, welder, welding operator, and tacker performance qualifications.

1.4 SUBMITTALS

Government approval is required for submittals with a "GA" designation; submittals having an "FIO" designation are for information only. The

following shall be submitted in accordance with Section 01330SUBMITTAL PROCEDURES:

SD-08 Statements

Welding Procedure Qualifications; GA.

Welder, Welding Operator, and Tacker Qualification; GA.

Inspector Qualification; GA.

Copies of the welding procedure specifications; the procedure qualification test records; and the welder, welding operator, or tacker qualification test records.

SD-18 Records

Quality Control; GA.

A quality assurance plan and records of tests and inspections.

1.5 WELDING PROCEDURE QUALIFICATIONS

Except for prequalified (per AWS D1.1) and previously qualified procedures, each Contractor performing welding shall record in detail and shall qualify the welding procedure specification for any welding procedure followed in the fabrication of weldments. Qualification of welding procedures shall conform to AWS D1.1 and to the specifications in this section. Copies of the welding procedure specification and the results of the procedure qualification test for each type of welding which requires procedure qualification shall be submitted for approval. Approval of any procedure, however, will not relieve the Contractor of the sole responsibility for producing a finished structure meeting all the requirements of these specifications. This information shall be submitted on the forms in Appendix E of AWS D1.1. Welding procedure specifications shall be individually identified and shall be referenced on the detail drawings and erection drawings, or shall be suitably keyed to the contract drawings. In case of conflict between this specification and AWS D1.1, this specification governs.

1.5.1 Previous Qualifications

Welding procedures previously qualified by test may be accepted for this contract without requalification if the following conditions are met:

a. Testing was performed by an approved testing laboratory, technical consultant, or the Contractor's approved quality control organization.

b. The qualified welding procedure conforms to the requirements of this specification and is applicable to welding conditions encountered under this contract.

c. The welder, welding operator, and tacker qualification tests conform to the requirements of this specification and are applicable to welding conditions encountered under this contract.

1.5.2 Prequalified Procedures

Welding procedures which are considered prequalified as specified in AWS D1.1 will be accepted without further qualification. The Contractor shall submit for approval a listing or an annotated drawing to indicate the joints not prequalified. Procedure qualification shall be required for these joints.

1.5.3 Retests

If welding procedure fails to meet the requirements of AWS D1.1, the procedure specification shall be revised and requalified, or at the Contractor's option, welding procedure may be retested in accordance with AWS D1.1. If the welding procedure is qualified through retesting, all test results, including those of test welds that failed to meet the requirements, shall be submitted with the welding procedure.

1.6 WELDER, WELDING OPERATOR, AND TACKER QUALIFICATION

Each welder, welding operator, and tacker assigned to work on this contract shall be qualified in accordance with the applicable requirements of AWS D1.1 and as specified in this section. Welders, welding operators, and tackers who make acceptable procedure qualification test welds will be considered qualified for the welding procedure used.

1.6.1 Previous Qualifications

At the discretion of the Contracting Officer, welders, welding operators, and tackers qualified by test within the previous 6 months may be accepted for this contract without requalification if all the following conditions are met:

a. Copies of the welding procedure specifications, the procedure qualification test records, and the welder, welding operator, and tacker qualification test records are submitted and approved in accordance with the specified requirements for detail drawings.

b. Testing was performed by an approved testing laboratory, technical consultant, or the Contractor's approved quality control organization.

c. The previously qualified welding procedure conforms to the requirements of this specification and is applicable to welding conditions encountered under this contract.

d. The welder, welding operator, and tacker qualification tests conform to the requirements of this specification and are applicable to welding conditions encountered under this contract.

1.6.2 Certificates

Before assigning any welder, welding operator, or tacker to work under this contract, the Contractor shall submit the names of the welders, welding operators, and tackers to be employed, and certification that each individual is qualified as specified. The certification shall state the type of welding and positions for which the welder, welding operator, or tacker is qualified, the code and procedure under which the individual is qualified, the date qualified, and the name of the firm and person

certifying the qualification tests. The certification shall be kept on file, and 3 copies shall be furnished. The certification shall be kept current for the duration of the contract.

1.6.3 Renewal of Qualification

Requalification of a welder or welding operator shall be required under any of the following conditions:

a. It has been more than 6 months since the welder or welding operator has used the specific welding process for which he is qualified.

b. There is specific reason to question the welder or welding operator's ability to make welds that meet the requirements of these specifications.

c. The welder or welding operator was qualified by an employer other than those firms performing work under this contract, and a qualification test has not been taken within the past 12 months. Records showing periods of employment, name of employer where welder, or welding operator, was last employed, and the process for which qualified shall be submitted as evidence of conformance.

d. A tacker who passes the qualification test shall be considered eligible to perform tack welding indefinitely in the positions and with the processes for which he is qualified, unless there is some specific reason to question the tacker's ability. In such a case, the tacker shall be required to pass the prescribed tack welding test.

1.7 INSPECTOR QUALIFICATION

Inspection and nondestructive testing personnel shall be qualified in accordance with the requirements of ASNT-01 for Levels I or II in the applicable nondestructive testing method. The inspector may be supported by assistant welding inspectors who are not qualified to ASNT-01, and assistant inspectors may perform specific inspection functions under the supervision of the qualified inspector.

1.8 SYMBOLS

Symbols shall be in accordance with AWS A2.4, unless otherwise indicated.

1.9 SAFETY

Safety precautions during welding shall conform to AWS Z49.1.

2 PRODUCTS

2.1 WELDING EQUIPMENT AND MATERIALS

All welding equipment, electrodes, welding wire, and fluxes shall be capable of producing satisfactory welds when used by a qualified welder or welding operator performing qualified welding procedures. All welding equipment and materials shall comply with the applicable requirements of AWS D1.1.

3 EXECUTION

3.1 WELDING OPERATIONS

3.1.1 Requirements

Workmanship and techniques for welded construction shall conform to the requirements of AWS D1.1 and AISC S335 When AWS D1.1 and the AISC S335 specification conflict, the requirements of AWS D1.1 shall govern.

3.1.2 Identification

Welds shall be identified in one of the following ways:

a. Written records shall be submitted to indicate the location of welds made by each welder, welding operator, or tacker.

b. Each welder, welding operator, or tacker shall be assigned a number, letter, or symbol to identify welds made by that individual. The Contracting Officer may require welders, welding operators, and tackers to apply their symbol next to the weld by means of rubber stamp, felt-tipped marker with waterproof ink, or other methods that do not cause an indentation in the metal. For seam welds, the identification mark shall be adjacent to the weld at 3-foot intervals. Identification with die stamps or electric etchers shall not be allowed.

3.2 QUALITY CONTROL

Testing shall be done by an approved inspection or testing laboratory or technical consultant, using AWS certified welding inspectors for fabrication and erection inspection, as well as testing and verification inspection. Procedures and techniques for inspection shall be in accordance with applicable requirements of AWS D1.1, except that in radiographic inspection only film types designated as "fine grain," or "extra fine," shall be employed. Ultrasonic testing may be employed at the discretion of the welding inspector.

3.3 STANDARDS OF ACCEPTANCE

Dimensional tolerances for welded construction, details of welds, and quality of welds shall be in accordance with the applicable requirements of AWS D1.1 and the contract drawings. Nondestructive testing shall be by visual inspection and radiographic, ultrasonic, magnetic particle, or dye penetrant methods. The minimum extent of nondestructive testing shall be random 100 percent visual inspection of welds or joints, and 10% magnetic particle testing for fillet welds as indicated on the drawings. Complete penetration welds shall be ultrasonically/radiographically tested at 100 percent. This may be reduced to 25 percent at the discretion of the welding inspector after a suitable number of completed welds by each specific welder/welding operator with a reject rate of less than 5 percent.

3.3.1 Nondestructive Examination

The welding shall be subject to inspection and tests in the mill, shop, and field. Inspection and tests in the mill or shop will not relieve the Contractor of the responsibility to furnish weldments of satisfactory

quality. When materials or workmanship do not conform to the specification requirements, the Government reserves the right to reject material or workmanship or both at any time before final acceptance of the structure containing the weldment.

3.3.2 DESTRUCTIVE TESTS

When metallographic specimens are removed from any part of a structure, the Contractor shall make repairs. The Contractor shall employ qualified welders or welding operators, and shall use the proper joints and welding procedures, including peening or heat treatment if required, to develop the full strength of the members and joints cut and to relieve residual stress.

3.4 GOVERNMENT INSPECTION AND TESTING

In addition to the inspection and tests performed by the Contractor for quality control, the Government will perform inspection and testing for acceptance to the extent determined by the Contracting Officer. The costs of such inspection and testing will be borne by the Contractor if unsatisfactory welds are discovered, or by the Government if the welds are satisfactory. The work may be performed by the Government's own forces or under a separate contract for inspection and testing. The Government reserves the right to perform supplemental nondestructive and destructive tests to determine compliance with paragraph STANDARDS OF ACCEPTANCE.

3.5 CORRECTIONS AND REPAIRS

When inspection or testing indicates defects in the weld joints, the welds shall be repaired using a qualified welder or welding operator as applicable. Corrections shall be in accordance with the requirements of AWS D1.1 and the specifications. Defects shall be repaired in accordance with the approved procedures. Defects discovered between passes shall be repaired before additional weld material is deposited. Wherever a defect is removed and repair by welding is not required, the affected area shall be blended into the surrounding surface to eliminate sharp notches, crevices, or corners. After a defect is thought to have been removed, and before welding, the area shall be examined by suitable methods to insure that the defect has been eliminated. Repair welds shall meet the inspection requirements for the original welds. Any indication of a defect shall be regarded as a defect, unless reevaluation by nondestructive methods or by surface conditioning shows that no unacceptable defect is present.

SECTION 05120

STRUCTURAL STEEL

1 GENERAL

1.1 REFERENCES

The publications listed below form a part of this specification to the extent referenced. The publications are referred to in the text by basic designation only.

AMERICAN INSTITUTE OF STEEL CONSTRUCTION (AISC)

AISC-01	(1986) Load & Resistance Factor Design Manual of Steel Construction
AISC-02	(1989) Manual of Steel Construction Allowable Stress Design
AISC S303	(1992) Code of Standard Practice for Steel Buildings and Bridges
AISC S328L	(1986) Load and Resistance Factor Design Specification for Structural Steel Buildings
AISC S329	(1986) Allowable Stress Design Specification for Structural Joints Using ASTM A325 or ASTM A490 Bolts
AISC S331L	(1986) Guide to LRFD
AISC S334L	(1988) Load and Resistance Factor Design Specification for Structural Joints Using ASTM A325 or A490 Bolts
AISC S335	(1989) Specification for Structural Steel Buildings - Allowable Stress Design and Plastic Design
AISC S338L	(1990) Load and Resistance Factor Design of Simple Shear Connections

AMERICAN SOCIETY FOR TESTING AND MATERIALS (ASTM)

ASTM A 6	(1996b) Rolled Steel Plates, Shapes, Sheet Piling, and Bars for Structural Use
ASTM A 36	(1996) Structural Steel
ASTM A 53	(1996) Pipe, Steel, Black and Hot-Dipped, Zinc-Coated Welded and Seamless
ASTM A 242	(1994) High-Strength Low-Alloy Structural Steel

ASTM A 307	(1994) Carbon Steel Bolts and Studs, 60 000 PSI Tensile Strength
ASTM A 325	(1996) Structural Bolts, Steel, Heat Treated, 120/105 ksi Minimum Tensile Strength
ASTM A 490	(1993) Heat-Treated Steel Structural Bolts, 150 ksi Minimum Tensile Strength
ASTM A 500	(1993) Cold-Formed Welded and Seamless Carbon Steel Structural Tubing in Rounds and Shapes
ASTM A 501	(1989) Hot-Formed Welded and Seamless Carbon Steel Structural Tubing
ASTM A 502	(1991) Steel Structural Rivets
ASTM A 514	(1991) High-Yield-Strength, Quenched and Tempered Alloy Steel Plate, Suitable for Welding
ASTM A 529	(1989) Structural Steel with 42 ksi (290 MPa) Minimum Yield Point (1/2 in. (13 mm) Maximum Thickness)
ASTM A 563	(1994) Carbon and Alloy Steel Nuts
ASTM A 572	(1991) High-Strength Low-Alloy Columbium-Vanadium Steels of Structural Quality
ASTM A 588	(1991a) High-Strength Low-Alloy Structural Steel with 50 ksi (345 MPa) Minimum Yield Point to 4 in. (100 mm) Thick
ASTM A 618	(1990a) Hot-Formed Welded and Seamless High-Strength Low-Alloy Structural Tubing
ASTM A 709	(1991) Structural Steel for Bridges
ASTM A 852	(1991) Quenched and Tempered Low-Alloy Structural Steel Plate with 70 ksi (485 MPa) Minimum Yield Strength to 4 in. (100 mm) Thick
ASTM F 436	(1993) Hardened Steel Washers
ASTM F 844	(1990) Washers, Steel, Plain (Flat), Unhardened for General Use
ASTM F 959	(1996) Compressible-Washer-Type Direct Tension Indicator for Use with Structural Fasteners

AMERICAN SOCIETY OF MECHANICAL ENGINEERS (ASME)

ASME B18.21.1	(1995) Lock Washers (Inch Series)

ASME B46.1	(1995) Surface Texture (Surface Roughness, Waviness and Lay)

AMERICAN WELDING SOCIETY (AWS)

AWS A2.4	(1993) Symbols for Welding, Brazing and Nondestructive Examination
AWS D1.1	(1996) Structural Welding Code - Steel

STEEL STRUCTURES PAINTING COUNCIL (SSPC)

SSPC Paint 25	(1991) Red Iron Oxide, Zinc Oxide, Raw Linseed Oil and Alkyd Primer (without Lead and Chromate Pigments)

1.2 GENERAL REQUIREMENTS

Structural steel fabrication and erection shall be performed by an organization experienced in structural steel work of equivalent magnitude. The Contractor shall be responsible for correctness of detailing, fabrication, and for the correct fitting of structural members. Connections, for any part of the structure not shown on the contract drawings, shall be considered simple shear connections and shall be designed and detailed in accordance with AISC-02. Substitution of sections or modification of connection details will not be accepted unless approved by the Contracting Officer. AISC S335 shall govern the work. Welding shall be in accordance with AWS D1.1. High-strength bolting shall be in accordance with AISC S329.

1.3 SUBMITTALS

Government approval is required for submittals with a "GA" designation; submittals having an "FIO" designation are for information only. The following shall be submitted in accordance with Section 01330 SUBMITTAL PROCEDURES:

SD-04 Drawings

Structural Steel System; GA. Structural Connections; GA.

Shop and erection details sizes and lengths, location; type and size of bolts; welds, connection detail, blocks, copes and cuts including members (with their connections) not shown on the contract drawings. Welds shall be indicated by standard welding symbols in accordance with AWS A2.4. Submit fabrication drawings for approval prior to fabrication. Drawings shall not be reproductions of contract drawings.

SD-08 Statements

Erection; GA. Survey; GA

Erection plan of the structural steel framing required. Erection plan shall conform to the requirements of AISC S303, shall be submitted prior to erection, and shall describe all necessary temporary supports, including the

sequence of installation and removal. Structural steel frame erection and location survey results per paragraph 3.2.2.

SD-13 Certificates

Mill Test Reports; GA.

Certified copies of mill test reports for structural steel, structural bolts, nuts, washers and other related structural steel items.

Welder Qualifications; GA.

Certified copies of welder qualifications test records showing qualification in accordance with AWS D1.1.

1.3.1 Welding Procedures and Qualifications

Prior to welding, submit certification for each welder stating the type of welding and positions qualified for, the code and procedure qualified under, date qualified, and the firm and individual certifying the qualification tests. If the qualification date of the welding operator is more than one-year old, the welding operator's qualification certificate shall be accompanied by a current certificate by the welder attesting to the fact that he has been engaged in welding since the date of certification, with no break in welding service greater than 6 months."

Fabrication; GA.

A copy of the AISC certificate indicating that the fabrication plant meets the specified structural steelwork category.

SD-14 Samples

High Strength Bolts; GA.

Random samples of bolts, nuts, and washers as delivered to the job site if requested, taken in the presence of the Contracting Officer and provided to the Contracting Officer for testing to establish compliance with specified requirements.

1.4 STORAGE

Material shall be stored out of contact with the ground in such manner and location as will minimize deterioration.

2 PRODUCTS

2.1 STRUCTURAL STEEL

2.1.1 Carbon Grade Steel

Carbon grade steel shall conform to ASTM A 36.

2.2 STRUCTURAL TUBING

Structural tubing shall conform to ASTM A 500, Grade B.

2.3 STEEL PIPE

Steel pipe shall conform to ASTM A 53, Type E or Type S, Grade B.

2.4 HIGH STRENGTH BOLTS

High strength bolts shall conform to ASTM A 325 or ASTM A 490. The bolt heads and the nuts of the supplied fasteners must be marked with the manufacturers identification mark, the strength grade, and type specified.

2.5 CARBON STEEL BOLTS

Carbon steel bolts shall conform to ASTM A 307, Grade A.

2.6 CARBON STEEL NUTS

Carbon steel nuts shall conform to ASTM A 563, Grade A, Heavy Hex Style.

2.7 WASHERS

Plain washers shall conform to ASTM F 844. Hardened washers shall conform to ASTM F 436.

2.8 PAINT

Paint shall conform to SSPC Paint 25.

3 EXECUTION

3.1 FABRICATION

Fabrication shall be in accordance with the applicable provisions of the AISC S335. Fabrication and assembly shall be done in the shop to the greatest extent possible. The fabricating plant shall be certified under the AISC quality certification program for Category I structural steelwork. Compression joints depending on contact bearing shall have a surface roughness not in excess of 500 micro inches as determined by ASME B46.1, and ends shall be square within the tolerances for milled ends specified in ASTM A 6. Structural steelwork, except surfaces of steel to be encased in concrete, surfaces to be field welded, surfaces to be fireproofed, shall be prepared for painting in accordance with the AISC S335 and primed with the specified paint.

3.2 ERECTION

Erection of structural steel shall be in accordance with the applicable provisions of the AISC S335.

3.2.1 Connections

Except as modified in this section, connections not detailed shall be designed in accordance with AISC S335. Build connections into existing work. Do not tighten anchor bolts set in concrete with impact torque wrenches. Punch, subpunch and ream, or drill bolt holes. Bolts, nuts, and washers shall be clean of dirt and rust, and lubricated immediately prior to installation.

3.2.1.1 High-Strength Bolts

ASTM A 325 bolts shall be fully tensioned to 70 percent of their minimum tensile strength. Provide load indicator washers in all high strength bolted connections. Direct tension indicator tightening, or installation of alternate design fasteners, shall be the only acceptable tightening methods. Use only direct tension indicator tightening for slip critical connections. Bolts shall be installed in connection holes and initially brought to a snug tight fit. After the initial tightening procedure, bolts shall then be fully tensioned, progressing from the most rigid part of a connection to the free edges.

3.2.1.2 Installation of Load Indicator Washers (LIW)

ASTM F 959. Where possible, the LIW shall be installed under the bolt head and the nut shall be tightened. If the LIW is installed adjacent to the turned element, provide a flat ASTM F 436 washer between the LIW and nut when the nut is turned for tightening, and between the LIW and bolt head when the bolt head is turned for tightening.

3.2.2 Structural Steel Frame Erection and Location

The contractor shall retain an independent land surveyor registered in the State of Washington to survey and certify that:

a. All steel frame base plate anchor bolt locations have been accurately located within the tolerance limitations set by A.I.S.C.

b. The steel frame columns have been erected vertically plumb, within the tolerance limitations set by A.I.S.C., prior to and subsequent to final bolting and welding.

Results of survey shall be recorded, sealed and signed by surveyor registered in the State of Washington. One copy shall be submitted to the Contracting Officer.

3.2.3 Alignment of Adjustable Items

Wall supports, curb angles, and similar supporting members shall be accurately set with string lines and/or other suitable methods. These items will be considered properly located when their location is within 3/8" of their theoretical location and if the displacement along any length does not exceed the length divided by 500 and meets all AISC tolerance requirements.

3.2.4 Base Plates and Bearing Plates

Column base plates for columns and bearing plates for beams, girders, and similar members shall be provided. Base plates and bearing plates shall be provided with full bearing after the supported members have been plumbed and properly positioned, but prior to placing superimposed loads. Separate setting plates under column base plates will not be permitted. The area under the plate shall be damp-packed solidly with bedding mortar, except where nonshrink grout is indicated on the drawings. Bedding mortar and grout shall be as specified in Section 03300 CONCRETE FOR BUILDING CONSTRUCTION.

3.2.5 Field Welded Connections

Field welded structural connections shall be completed before load is applied.

3.2.6 Field Priming

After erection, the field bolt heads and nuts, field welds, and any abrasions in the shop coat shall be cleaned and primed with paint of the same quality as that used for the shop coat.

3.2.7 Field Quality Control

Perform field tests, and provide labor, equipment, and incidentals required for testing. The Contracting Officer shall be notified in writing of defective welds, bolts, nuts, washers, headed studs and welded deformed bars within 7 working days of the date of weld inspection.

3.2.7.1 Welded Connection

For inspection of welded connections see Section 05055, WELDING, STRUCTURAL.

3.2.8 Load Indicator Washers

3.2.8.1 Load Indicator Washer Compression

Load indicator washers shall be tested in place to verify that they have been compressed sufficiently to provide the 0.015-inch gap when the load indicator washer is placed under the bolt head and the nut is tightened, and to provide the 0.005-inch gap when the load indicator washer is placed under the turned element, as required by ASTM F 959.

3.2.8.2 Load Indicator Gaps

In addition to the above testing, an independent testing agency as approved by the Contracting Officer, shall test in place the load indicator gaps on 20 percent of the installed load indicator washers to verify that the ASTM F 959 load indicator gaps have been achieved. If more than 10 percent of the load indicators tested have not been compressed sufficiently to provide the average gaps required by ASTM F 959, then all in place load indicator washers shall be tested to verify that the ASTM F 959 load indicator gaps have been achieved. Test locations shall be selected by the Contracting Officer.

3.2.9 High-Strength Bolts

3.2.9.1 Testing Bolt, Nut, and Washer Assemblies

Test a minimum of 3 bolt, nut, and washer assemblies from each mill certificate batch in a tension measuring device at the job site prior to the beginning of bolting start-up. Demonstrate that the bolts and nuts, when used together, can develop tension not less than the provisions specified in AISC S329 for all structural steel. The bolt tension shall be developed by tightening the nut. A representative of the manufacturer or supplier shall be present to ensure that the fasteners are properly used, and to demonstrate that the fastener assemblies supplied satisfy the specified requirements.

3.2.10 Testing

The Government has the option to perform nondestructive tests on 5 percent of the installed bolts to verify compliance with pre-load bolt tension requirements. The nondestructive testing will be done in-place using an ultrasonic measuring device or any other device capable of determining in-place pre-load bolt tension. The test locations shall be selected by the Contracting Officer. If more than 10 percent of the bolts tested contain defects identified by testing, then all bolts used from the batch from which the tested bolts were taken, shall be tested. Retest new bolts after installation.

SECTION 05210

STEEL JOISTS

1 GENERAL

1.1 REFERENCES

The publications listed below form a part of this specification to the extent referenced. The publications are referred to in the text by basic designation only.

AMERICAN WELDING SOCIETY, INC. (AWS)

AWS D1.1	1996 Structural Welding Code Steel

STEEL JOIST INSTITUTE (Steel Joist Institute)

Steel Joist Institute

SSTSJ	1992 Weight Tables and Load Tables for Steel Joists and Joist Girders
SJI-01	(1994) Standard Specifications Load Tables and Weight Tables for Steel Joists and Joist Girders

1.2 SUBMITTALS

Government approval is required for submittals with a "GA" designation; submittals having an "FIO" designation are for information only. The following shall be submitted in accordance with Section 01330 SUBMITTAL PROCEDURES:

SD-04 Drawings

Steel Joists; GA.

Detail drawings shall include fabrication and erection details, specifications for shop painting, and identification markings of joists. Show joist type and size, layout in plan, and erection details; including method of anchoring, framing at openings, type and spacing of bridging, requirements for field welding and details of accessories as applicable. Drawings shall bear the seal and signature of an engineer registered in the State of Washington.

SD-13 Certificates

Steel Joists; GA.

Certificates stating that the steel joists and joist girders have been designed and manufactured in accordance with SJI-01. Complete engineering design computations may be submitted in lieu of the certification.

1.3 DESCRIPTION

Steel joists and joist girders are designated on the drawings in accordance with the standard designations of the Steel Joist Institute. Joists of other standard designations or joists with properties other than those shown may be substituted for the joists designated provided the structural properties are equal to or greater than those of the joists shown and provided all other specified requirements are met.

1.4 DELIVERY AND STORAGE

Materials shall be delivered to the site in undamaged condition and stored off the ground in a well drained location, protected from damage, and easily accessible for inspection and handling.

1.5 QUALITY ASSURANCE

1.5.1 Member Design

Design, fabrication and erection shall be in accordance with the latest edition of "Standard Specification for Open Web Steel Joists" as adopted by the Steel Joist Institute. The fabricator shall be a member of the steel joist institute. A Steel Joist Institute letter or notarized affidavit stating current membership status in Steel Joist Institute shall accompany the shop drawing submittal. Steel joists shall be designed for loadings shown and noted on structural drawing schedules, plans and details and coordinated with mech/elec/plumbing drawings. All concentrated loads applied to joists including mechanical equipment shall be located at panel points where possible or as shown on drawings. Where it is necessary to apply concentrated loads between panel points, special provisions shall be made such as providing additional web members capable of supporting the load from point of load to panel point at opposite chord.

2 PRODUCTS

2.1 OPEN WEB STEEL JOISTS

Open web steel joists shall conform to SJI-01, K-Series. Joists shall be designed to support the loads given in the standard load tables of SJI-01.

2.2 LONGSPAN STEEL JOISTS

Longspan steel joists shall conform to SJI-01, LH-Series. Joists designated LH shall be designed to support the loads given in the applicable standard load tables of SJI-01.

2.3 JOIST GIRDERS

Joist girders shall conform to SJI-01.

2.4 ACCESSORIES AND FITTINGS

Accessories and fittings, including end supports and bridging, shall be in accordance with the standard specifications under which the members were designed.

2.5 SHOP PAINTING

Joists, joist girders, and accessories shall be shop painted with a rust-inhibiting primer paint. For joists and joist girders which will be finish painted under Section 09900 PAINTING, GENERAL, the primer paint shall be limited to a primer which is compatible with the specified finish paint. Shop painting shall be according to SSPC PS14.01 "Steel Joist Shop Painting System."

3 EXECUTION

3.1 ERECTION

Installation of joists and joist girders shall be in accordance with the standard specification under which the member was produced. Joists and joist girders shall be handled in a manner to avoid damage. Damaged joists and joist girders shall be removed from the site, except when field repair is approved and such repairs are satisfactorily made in accordance with the manufacturer's recommendations. Joists and joist girders shall be accurately set, and end anchorage shall be in accordance with the standard specification under which the joists were produced. Joist bridging and anchoring shall be secured in place prior to the application of any construction loads. Any temporary loads shall be distributed so that the carrying capacity of any joist is not exceeded. Loads shall not be applied to bridging during construction or in the completed work. Abraded, corroded, and field welded areas shall be cleaned and touched up with the same type of paint used in the shop painting. Joist bearing shall be as shown and noted on the structural details with minimum bearing lengths per Steel Joist Institute. Special joist shoes shall be provided on all joists with a length of bearing less than Steel Joist Institute specification minimums. The manufacturer shall provide calculations for these special joist bearings. All steel joists shall have full contact bearing area under the joist shoes. Where this does not occur shims shall be provided by the fabricator as required to obtain full contact bearing over the entire shoe length. Bridging and other accessory details shall be per Steel Joist Institute and manufacturer requirements unless otherwise detailed on the drawings.

3.2 VISUAL INSPECTIONS

3.2.1 Pry Test

Before erection, visually inspect all joists at the site. Check any doubtful welds with a pry bar. If the weld cracks or breaks, replace the joist.

3.2.2 Erection Inspection

AWS D1.1, Section 6. Perform erection inspection and field welding inspections with AWS certified welding inspectors. Welding inspectors shall visually inspect and mark welds.

This page intentionally blank

SECTION 05300

STEEL DECKING

1 GENERAL

1.1 REFERENCES

The publications listed below form a part of this specification to the extent referenced. The publications are referred to in the text by basic designation only.

AMERICAN INSTITUTE OF STEEL CONSTRUCTION (AISC)

AISC S335	(1989) Specification for Structural Steel Buildings - Allowable Stress Design and Plastic Design

AMERICAN IRON AND STEEL INSTITUTE (AISI)

AISI SG-673	(1986; Addenda 1989; Errata Nov 30, 1990) Cold-Formed Steel Design Manual

AMERICAN SOCIETY FOR TESTING AND MATERIALS (ASTM)

ASTM A 108	(1990a) Steel Bars, Carbon, Cold Finished, Standard Quality
ASTM A 525	(1991b) General Requirements for Steel Sheet, Zinc-Coated (Galvanized) by the Hot-Dip Process
ASTM A 570	(1991) Steel, Sheet and Strip, Carbon, Hot-Rolled, Structural Quality
ASTM A 611	(1994) Steel, Sheet, Carbon, Cold-Rolled, Structural Quality
ASTM A 653	(1995) Steel Sheet, Zinc-Coated (Galvanized) by the Hot-Dip Process, Structural (Physical) Quality
ASTM A 792	(1995) Steel Sheet, Aluminum-Zinc Alloy-Coated by the Hot-Dip Process
ASTM C 423	(1990a) Sound Absorption and Sound Absorption Coefficients by the Reverberation Room Method
ASTM E 795	(1992) Mounting Test Specimens During Sound Absorption Tests

AMERICAN WELDING SOCIETY (AWS)

AWS D1.1	(1992) Structural Welding Code - Steel

AWS D1.3	(1989) Structural Welding Code - Sheet Steel

MILITARY SPECIFICATIONS (MS)

MS DOD-P-21035	(Rev A) Paint, High Zinc Dust Content, Galvanizing Repair (Metric)

STEEL DECK INSTITUTE (SDI)

SDI-02	(1987; Amended 1991) Diaphragm Design Manual
SDI Pub No 28	(1995) Design Manual for Composite Decks, Form Decks, Roof Decks, and Cellular Metal Floor Deck with Electrical Distribution

1.2 SUBMITTALS

Government approval is required for submittals with a "GA" designation; submittals having an "FIO" designation are for information only. The following shall be submitted in accordance with Section 01330 SUBMITTAL PROCEDURES:

SD-01 Data

Deck Units; GA.

Design computations for the structural properties of the deck units or SDI certification that the units are designed in accordance with SDI specifications.

SD-04 Drawings

Deck Units; GA. Accessories; FIO. Attachments; FIO. Holes and Openings; FIO.

Drawings shall include type, configuration, structural properties, location, and necessary details of deck units, accessories, and supporting members; size and location of holes to be cut and reinforcement to be provided; location and sequence of welded or fastener connections; and the manufacturer's erection instructions.

SD-13 Certificates

Deck Units; GA. Attachments; GA.

Manufacturer's certificates attesting that the decking material meets the specified requirements. Manufacturer's certificate attesting that the operators are authorized to use the low-velocity piston tool.

SD-14 Samples

Deck Units; FIO. Accessories; FIO.

A 2 sq. ft. sample of the decking material to be used, along with a sample of each of the accessories used. A sample of acoustical material to be used shall be included.

SD-18 Statements

Attachments; GA.

Prior to welding operations, copies of qualified procedures and lists of names and identification symbols of qualified welders and welding operators.

1.3 DELIVERY, STORAGE, AND HANDLING

Deck units shall be delivered to the site in a dry and undamaged condition, stored off the ground with one end elevated, and stored under a weathertight covering permitting good air circulation. Finish of deck units shall be maintained at all times by using touch-up paint whenever necessary to prevent the formation of rust. Follow any additional requirements or recommendations stipulated by the deck manufacturer.

1.4 QUALITY ASSURANCE

1.4.1 Steel Deck

Roof deck shall be 3" Type "N" galvanized steel deck, composite floor deck shall be 3" Type W-formlock with provisions for positive interlock with concrete, fabricated and erected in accordance with the latest edition of standard specifications as adopted by the Steel Deck Institute. Deck and accessories shall be products of a manufacturer regularly engaged in manufacture of steel decking. Section and properties of steel deck shall conform to minimum specifications for the design of light gage cold formed steel structural members as published by AISI SG-673. The fabricator shall be a member of the Steel Deck Institute. A Steel Deck Institute letter or notarized affidavit stating current membership status in Steel Deck Institute shall accompany the shop drawing submittal.

2 PRODUCTS

2.1 DECK UNITS

Deck units shall conform to SDI Pub No 28. Panels of maximum possible lengths shall be used to minimize end laps. Fabricate deck units in lengths to span 3 or more supports with flush, telescoped, or nested 2-inch laps at ends, and interlocking, or nested side laps, unless otherwise indicated. Deck with cross-sectional configuration differing from the units indicated may be used, provided that the properties of the proposed units, determined in accordance with AISI SG-673, are equal to or greater than the properties of the units indicated and that the material will fit the space provided without requiring revisions to adjacent materials or systems.

2.1.1 Roof Deck

Steel deck used in conjunction with insulation and built-up roofing shall conform to ASTM A 653, ASTM A 611 or ASTM A 792. Roof deck units shall be fabricated of the steel design thickness required by the design drawings and shall be zinc-coated in conformance with ASTM A 525, G90 coating class.

2.1.2 Composite Deck

Deck used as part of a composite deck assembly shall conform to ASTM A 446 or ASTM A 611. Deck used as the tension reinforcing in composite deck shall

be fabricated of the steel design thickness required by the design drawings, and shall be zinc-coated in conformance with ASTM A 525, G90 coating class. Deck units used in composite deck shall have adequate embossment to develop mechanical shear bond to provide composite action between the deck and the concrete.

2.2 TOUCH-UP PAINT

Touch-up paint for zinc-coated units shall be an approved galvanizing repair paint with a high-zinc dust content. Welds shall be touched-up with paint conforming to MS DOD-P-21035. Finish of deck units and accessories shall be maintained by using touch-up paint whenever necessary to prevent the formation of rust.

2.3 ADJUSTING PLATES

Adjusting plates or segments of deck units shall be provided in locations too narrow to accommodate full-size units. As far as practical, the plates shall be the same thickness and configuration as the deck units.

2.4 CLOSURE PLATES

2.4.1 Closure Plates for Roof Deck

Voids above interior walls shall be closed with sheet metal where shown. Open deck cells at parapets, end walls, eaves, and openings through roofs shall be closed with sheet metal. Sheet metal shall be same thickness as deck units.

2.4.2 Closure Plates for Composite Deck

The concrete shall be supported and retained at each floor level. Provide edge closures at all edges of the slab of sufficient strength and stiffness to support the wet concrete. Metal closures shall be provided for all openings in composite steel deck 1/4 inch and over, including but not limited to:

2.4.2.1 Cover Plates to Close Panels

Cover plates to close panel edge and end conditions and where panels change direction or abut. Butt joints in composite steel deck may receive a tape joint cover.

2.4.2.2 Column Closures to Close Openings

Column closures to close openings between steel deck and structural steel columns.

2.4.2.3 Sheet Metal

Where deck is cut for passage of pipes, ducts, columns, etc., and deck is to remain exposed, provide a neatly cut sheet metal collar to cover edges of deck. Do not cut deck until after installation of supplemental supports.

2.5 ACCESSORIES

The manufacturer's standard accessories shall be furnished as necessary to complete the deck installation. Metal accessories shall be of the same material as the deck and have minimum design thickness as follows: saddles, 0.0474 inch; welding washers, 0.0598 inch; cant strip, 0.0295 inch; other metal accessories, 0.0358 inch; unless otherwise indicated. Accessories shall include but not be limited to saddles, welding washers, cant strips, butt cover plates, underlapping sleeves, and ridge and valley plates.

3 EXECUTION

3.1 ERECTION

Erection of deck and accessories shall be in accordance with SDI Pub No 28 and SDI-02 and the approved detail drawings. Damaged deck and accessories including material which is permanently stained or contaminated, with burned holes or deformed shall not be installed. The deck units shall be placed on secure supports, properly adjusted, and aligned at right angles to supports before being permanently secured in place. The deck shall not be filled with concrete, used for storage or as a working platform until the units have been secured in position. Shoring, if required, shall be in position before concrete placement begins in composite or form deck. Loads shall be distributed by appropriate means to prevent damage during construction and to the completed assembly. The maximum uniform distributed storage load shall not exceed the design live load. There shall be no loads suspended directly from the steel deck. Acoustical material shall be neatly fitted into the rib voids. Suspended ceilings may be supported by the attachment to the concrete within the steel deck.

3.2 ATTACHMENTS

All fasteners shall be installed in accordance with the manufacturer's recommended procedure, except as otherwise specified. The deck units shall be welded with nominal 5/8 inch diameter puddle welds to supports as indicated on the design drawings and in accordance with requirements of SDI Pub No 28. All welding of steel deck shall be in accordance with AWS D1.3 using methods and electrodes as recommended by the manufacturer of the steel deck being used. Welds shall be made only by operators previously qualified by tests prescribed in AWS D1.3 to perform the type of work required. Welding washers shall not be used at the connections of the deck to supports or at sidelaps. Holes and similar defects will not be acceptable. Deck ends shall be lapped 2 inches. All partial or segments of deck units shall be attached to structural supports in accordance with Section 2.5 of SDI-02. Immediately recertify, or replace with qualified welders, those welders that have passed qualification tests but are producing unsatisfactory welding.

3.3 HOLES AND OPENINGS

All holes and openings required shall be coordinated with the drawings, specifications, and other trades. Holes and openings shall be drilled or cut, reinforced and framed as indicated on the drawings or described in the specifications and as required for rigidity and load capacity. Holes and openings less than 6 inches across require no reinforcement. Holes and openings 6 to 12 inches across shall be reinforced by 0.0474-inch thick steel sheet at least 12 inches wider and longer than the opening and be fastened to the steel deck at each corner of the sheet and at a maximum of 6

inches on center. Holes and openings larger than 12 inches shall be reinforced by steel angles installed perpendicular to the steel joists and supported by the adjacent steel joists. The deck manufacturer and Contracting Officer shall approve holes or openings larger than 12 " in diameter prior to drilling or cutting. Steel angles shall be installed perpendicular to the deck ribs and shall be fastened to the angles perpendicular to the steel joists. Openings must not interfere with seismic members such as chords and drag struts.

3.4 PREPARATION OF FIRE-PROOFED SURFACES

Deck surfaces, both composite and noncomposite, which are to receive sprayed-on fireproofing, shall be galvanized and shall be free of all grease, mill oil, paraffin, dirt, salt, and other contaminants which impair adhesion of the fireproofing. Any required cleaning shall be done prior to steel deck installation using a cleaning method that is compatible with the sprayed-on fireproofing.

3.5 HANGARS

Provide clips or loops for suspended ceilings where slots or holes are punched in decking for installation of pigtails or decking manufacturer's standard connection as approved by the Contracting Officer. All connections must be to the concrete not to the metal deck itself.

SECTION 05500

MISCELLANEOUS METAL

1 GENERAL

1.1 REFERENCES

The publications listed below form a part of this specification to the extent referenced. The publications are referred to in the text by basic designation only.

ALUMINUM ASSOCIATION (AA)

AA DAF-45	(1980; R 1993) Designation System for Aluminum Finishes
AA SAA-46	(1978) Standards for Anodized Architectural Aluminum

AMERICAN NATIONAL STANDARDS INSTITUTE (ANSI)

ANSI A14.3	(1992) Ladders - Fixed - Safety Requirements

AMERICAN SOCIETY OF CIVIL ENGINEERS (ASCE)

ASCE 7-95	(1995) Minimum Design Loads for Buildings and Other Structures

AMERICAN SOCIETY FOR TESTING AND MATERIALS (ASTM)

ASTM A 36	(1996) Structural Steel
ASTM A 53	(1996) Pipe, Steel, Black and Hot-Dipped, Zinc-Coated Welded and Seamless
ASTM A 123	(1989a) Zinc (Hot-Dip Galvanized) Coatings on Iron and Steel Products
ASTM A 167	(1996) Stainless and Heat-Resisting Chromium-Nickel Steel Plate, Sheet, and Strip
ASTM A 283	(1991) Low and Intermediate Tensile Strength Carbon Steel Plates
ASTM A 446	(1991) Steel Sheet, Zinc-Coated (Galvanized) by the Hot-Dip Process, Structural (Physical) Quality
ASTM A 475	(1989) Zinc-Coated Steel Wire Strand
ASTM A 500	(1993) Cold-Formed Welded and Seamless Carbon Steel Structural Tubing in Rounds and Shapes

ASTM A 525	(1991b) General Requirement for Steel Sheet, Zinc-Coated (Galvanized) by the Hot-Dip Process
ASTM B 26	(1992a) Aluminum-Alloy Sand Castings
ASTM B 221	(1996) Aluminum and Aluminum-Alloy Extruded Bars, Rods, Wire, Profiles, and Tubes
ASTM B 429	(1992a) Aluminum-Alloy Extruded Structural Pipe and Tube
ASTM D 2047	(1982; R 1988) Static Coefficient of Friction of Polish-Coated Floor Surfaces as Measured by the James Machine

AMERICAN WELDING SOCIETY (AWS)

AWS D1.1	(1994) Structural Welding Code - Steel

COMMERCIAL ITEM DESCRIPTIONS (CID)

CID A-A-344	(Rev B) Lacquer, Clear Gloss, Exterior, Interior

FEDERAL SPECIFICATIONS (FS)

FS AA-S-271	(Rev D; Am 1) Shelving, Storage and Display, Steel, Interchangeable, Nut and Bolt Type
FS AA-S-1048	(Basic) Shelving, Storage and Display, Steel, Clip Type
FS RR-C-271	(Rev D) Chains and Attachments, Welded and Weldless
FS RR-G-1602	(Rev C) Grating, Metal, Other Than Bar Type (Floor, Except for Naval Vessels)

NATIONAL ASSOCIATION OF ARCHITECTURAL METAL MANUFACTURERS (NAAMM)

NAAMM-01	(1988) Metal Finishes Manual for Architectural and Metal Products
NAAMM AMP 500	(1992) Metal Finishes Manual for Architectural and Metal Products

NATIONAL FIRE PROTECTION ASSOCIATION (NFPA)

NFPA 211	(1992) Chimneys, Fireplaces, Vents and Solid Fuel Burning Appliances

1.2 SUBMITTALS

Government approval is required for submittals with a "GA" designation; submittals having an "FIO" designation are for information only. The

following shall be submitted in accordance with Section 01330SUBMITTAL PROCEDURES:

SD-04 Drawings

Miscellaneous Metal Items; GA.

Detail drawings indicating material thickness, type, grade, and class; dimensions; and construction details. Drawings shall include catalog cuts, erection details, manufacturer's descriptive data and installation instructions, and templates. Detail drawings for the following items: stairs, handrails, guardrails.

SD-14 Samples

Miscellaneous Metal Items; GA.

Samples of the following items: Samples shall be full size, taken from manufacturer's stock, and shall be complete as required for installation in the structure. Samples may be installed in the work, provided each sample is clearly identified and its location recorded.

1.3 GENERAL REQUIREMENTS

The Contractor shall verify all measurements and shall take all field measurements necessary before fabrication. Welding to or on structural steel shall be in accordance with AWS D1.1. Items specified to be galvanized, when practicable and not indicated otherwise, shall be hot-dip galvanized after fabrication. Galvanizing shall be in accordance with ASTM A 123, ASTM A 446, or ASTM A 525, as applicable. Exposed fastenings shall be compatible materials, shall generally match in color and finish, and shall harmonize with the material to which fastenings are applied. Materials and parts necessary to complete each item, even though such work is not definitely shown or specified, shall be included. Poor matching of holes for fasteners shall be cause for rejection. Fastenings shall be concealed where practicable. Thickness of metal and details of assembly and supports shall provide strength and stiffness. Joints exposed to the weather shall be formed to exclude water. Completed handrail and guardrail assemblies shall be capable of withstanding loads as specified in ASCE 7-95.

1.4 DISSIMILAR MATERIALS

Where dissimilar metals are in contact, or where aluminum is in contact with concrete, mortar, masonry, wet or pressure-treated wood, or absorptive materials subject to wetting, the surfaces shall be protected with a coat of bituminous paint or asphalt varnish.

1.5 WORKMANSHIP

Miscellaneous metalwork shall be well formed to shape and size, with sharp lines and angles and true curves. Drilling and punching shall produce clean true lines and surfaces. Welding shall be continuous along the entire area of contact except where tack welding is permitted. Exposed connections of work in place shall not be tack welded. Exposed welds shall be ground smooth. Exposed surfaces of work in place shall have a smooth finish, and unless otherwise approved, exposed riveting shall be flush. Where tight fits are required, joints shall be milled. Corner joints shall be coped or

mitered, well formed, and in true alignment. Work shall be accurately set to established lines and elevations and securely fastened in place. Installation shall be in accordance with manufacturer's installation instructions and approved drawings, cuts, and details.

1.6 ANCHORAGE

Anchorage shall be provided where necessary for fastening miscellaneous metal items securely in place. Anchorage not otherwise specified or indicated shall include slotted inserts made to engage with the anchors, expansion shields, and power-driven fasteners when approved for concrete; toggle bolts and through bolts for masonry; machine and carriage bolts for steel; and lag bolts and screws for wood.

1.7 #.1 ALUMINUM FINISHES

Unless otherwise specified, aluminum items shall have standard mill finish. The thickness of the coating shall be not less than that specified for protective and decorative type finishes for items used in interior locations or architectural Class I type finish for items used in exterior locations in AA DAF-45. Items to be anodized shall receive a polished-satin-finish pretreatment and a clear-lacquer overcoating, unless otherwise noted. Aluminum surfaces to be in contact with plaster or concrete during construction shall be protected with a field coat conforming to CID A-A-344.

1.8 #.1 SHOP PAINTING

Surfaces of ferrous metal except galvanized surfaces, shall be cleaned and shop coated with the manufacturer's standard protective coating unless otherwise specified. Surfaces of items to be embedded in concrete shall not be painted. Items to be finish painted shall be prepared according to manufacturer's recommendations or as specified.

2 PRODUCTS

2.1 ACCESS DOORS AND PANELS

Doors and panels shall be flush type unless otherwise indicated. Frames for access doors shall be fabricated of not lighter than 16-gauge steel with welded joints and finished with anchorage for securing into construction. Access doors shall be a minimum of 14 by 20 inches and of not lighter than 14-gauge steel, with stiffened edges, complete with attachments. Access doors shall be hinged to frame and provided with a flush-face screw-driver-operated latch. Exposed metal surfaces shall have a shop applied prime coat.

2.2 CORNER GUARDS AND SHIELDS

Corner guards at interior gypsum board walls shall be fabricated of 0.0625 inch thick stainless steel conforming to ASTM A 167, Type 302 or 304 with #4 satin finish. Corner guards shall extend from top of base to ceiling. Corner guard shall be formed to dimensions shown with slight return at edges. Secure to wall with adhesive per manufacturers recommendations. Exposed fasteners are not acceptable.

2.3 PIPE GUARDS

Pipe guards shall be heavy duty steel pipe conforming to ASTM A 53, Type E or S, weight STD, finish as indicated.

2.4 #.1 DOWNSPOUT BOOTS

Downspout boots shall be cast iron with receiving bells sized to fit downspouts.

2.5 HANDRAILS

Handrails shall be designed to resist a concentrated load of 200 pounds in any direction at any point of the top of the rail or 20 pounds per foot applied horizontally to top of the rail, whichever is more severe.

2.5.1 Steel Handrails, Stairs #1, #3

Steel handrails shall be steel pipe conforming to ASTM A 53 or structural tubing conforming to ASTM A 500, Grade A or B of equivalent strength. Steel railings shall use steel tubing in size as indicated.

a. Fabrication: Joint posts, rail, and corners shall be fabricated by one of the following methods:

(1) Mitered and welded joints made by fitting post to top rail and intermediate rail to post, mitering corners, groove welding joints, and grinding smooth. Butt railing splices and reinforce them by a tight fitting interior sleeve not less than 6 incheslong.

(2) Railings may be bent at corners in lieu of jointing, provided bends are made in suitable jigs and the pipe is not crushed.

2.6 #.1 ALUMINUM HANDRAILS, STAIRS #2, #4

Handrails shall consist of 1.9 and 1.0 inch outside diameter Schedule 40 pipe ASTM B 429. Railings shall be anodized aluminum bronze color. All fasteners shall be Series 300 stainless steel. Aluminum handrails may be a prefabricated system manufactured by a supplier experienced in the manufacture of handrail systems. Design shall be similar to design indicated. Manufactured system shall be approved by the contracting officer.

a. Jointing shall be by one of the following methods:

(1) Mitered joints, made by fitting post to top rail and intermediate rail to post and corners, shall be fitted and ground smooth. Splices shall be butted and reinforced by a tight fitting dowel not less than 6 inches in length. Dowel shall be connected to the splice by concealed mechanical fastener or by using epoxy cement. All exposed surfaces shall be medium bronze anodized. All edges shall be smooth and de-burred. Anodized color shall match at adjoining butting pieces.

b. Toe boards and brackets shall be provided where indicated, using flange castings as appropriate.

2.7 #.1 ALUMINUM GUARDRAIL AT LOBBY 200

Guardrails shall consist of 1.9 inch outside diameter Schedule 40 pipe ASTM B 429. Railings shall be anodized aluminum bronze color. All fasteners shall be Series 300 stainless steel.

a. Jointing shall be by one of the following methods:

(1) Mitered joints shall be fitted and ground smooth. Splices are not permitted. All exposed surfaces shall be medium bronze anodized. All edges shall be smooth and de-burred. Anodized color shall match at adjoining butting pieces. Glass panels shall be 1/2 inch tempered glass.

b. Brackets and shoe mouldings shall be provided where indicated, using flange castings as appropriate. Setting blocks, shims and fasteners shall be provided per the manufacturer's recommendations.

c. Installation shall be per manufacturer's recommendation.

2.8 #.1 ALUMINUM CHAIR RAILS

Chair rails shall consist of extruded aluminum as indicated. Chair rail shall be provided with fabricated end closure caps, concealed splices, cushions, mounting hardware and other accessories required to provide a complete system. Extruded aluminum retainers shall conform to ASTM B 221, alloy 6063, temper T5 or T6. End caps shall be field adjustable to assure close alignment with chair rail. Chair rail shall be profile as shown. Chair rail shall be clear anodized. All fasteners shall be concealed. Joints shall be tight fitting butt joints. Joints shall be evenly spaced at 10 ft. on center minimum in single rail runs.

2.9 #.1 CHAIR RAIL

Chair Rail shall consist of snap-on covers of minimum 0.125 inch thick extruded aluminum on a continuous, extruded aluminum retainer, minimum 0.062 inch thick anchored to wall at maximum 24 inches on center.

2.10 LADDERS

Ladders shall be steel fixed rail type in accordance with ANSI A14.3.

2.11 MIRROR FRAMES

Frames for plate-glass mirrors larger than 18 by 30 inches shall be fabricated from corrosion-resisting steel with satin finish. Frames shall be provided with concealed fittings and tamperproof mountings.

2.12 MISCELLANEOUS

Miscellaneous plates and shapes for items that do not form a part of the structural steel framework, such as lintels, sill angles, miscellaneous mountings, and frames, shall be provided to complete the work.

2.13 #.1 PARTITIONS, DIAMOND MESH TYPE

Partitions shall be constructed of metal fabric attached to structural steel framing members. Fabric shall be 10 gauge steel wires woven into 1-1/2 inch diamond mesh with wire secured through weaving channels. Framing members shall be channels 1-1/2 by 1/8 inch minimum size. Channel frames shall be mortised and tenoned at intersections. Steel frames, posts, and intermediate members shall be as required. Ferrous metal portions of partitions and accessories shall be galvanized.

2.14 #.1 SAFETY NOSING

Safety nosings shall be of cast aluminum with abrasive surface. Nosing shall be 3 inches wide and terminating at not more than 6 inches from the ends of treads, except nosing for metal pan cement-filled treads shall extend the full length of the tread. Safety nosings shall be provided with anchors not less than 3/4 inch long. Integrally cast mushroom anchors are not acceptable.

2.15 STEEL STAIRS

Steel stairs shall be complete with structural or formed tube steel stringers, metal-pan cement-filled treads, landings, columns, handrails, and necessary bolts and other fastenings as indicated. Structural steel shall conform to Section 05120, STRUCTURAL STEEL. Stairs and accessories shall be painted. Integral nosings shall have braces extended into the concrete fill.

2.16 ALUMINUM GATE

Aluminum gate shall be Standard Spear Design as manufactured by Specrail Industrial Grade Fence System, or equal. Aluminum gates shall have:

a. 1 inch by 1 inch by 0.065 inch pickets spaced at 4 inches
b. 2.5 inches by 2.5 inches by 0.075 inches posts
c. 1.625 inches by 1.625 inches by 1.625 inches rails (stringers)
d. All components manufactured of 6063-T5 in accordance with ASTM B 221.
e. All screws shall be 302 stainless steel self-drilling head.
f. Fence coating shall consist of high-solids acrylic coating exceeding AAMA 603.8.
g. Gates to have adjustable self-closing hinges and self-latching hardware.
h. Provide magnetic catch which will hold gates to adjacent bollards.
i. Provide footbolt to secure one leaf (non-latching) of gate into concrete pad.

Aluminum gates shall have maximum deflection of 3/8" at center meeting stiles.

2.17 #.1 FINISH

2.18 #.1 ALUMINUM FINISH

Finish for aluminum shall be in accordance with AA DAF-45. Exposed aluminum shall be designation AA-C22A31 chemically etched medium matte, with clear

anodic coating class II architectural coating 0.4 mil thick. Concealed aluminum shall be mill finish.

2.19 #.1 STAINLESS STEEL FINISH

Finish for stainless steel shall be in accordance with NAAMM AMP 500 Manual, finish number 4.

3 EXECUTION

3.1 GENERAL REQUIREMENTS

All items shall be installed at the locations shown and according to the manufacturer's recommendations. Items listed below require additional procedures as specified.

3.2 REMOVABLE ACCESS PANELS

A removable access panel not less than 12 by 12 inches shall be installed directly below each valve, flow indicator, damper, or air splitter that is located above the ceiling, other than an acoustical ceiling, and that would otherwise not be accessible.

3.3 PIPE GUARDS

Pipe guards shall be set vertically in concrete piers. Piers shall be constructed of, and the hollow cores of the pipe filled with, concrete specified in SECTION 03300= CONCRETE FOR BUILDING CONSTRUCTION having a compressive strength of 3000 psi.

3.4 ATTACHMENT OF HANDRAILS

Toeboards and brackets shall be installed where indicated. Splices where required, shall be made at expansion joints.

3.5 #.1 INSTALLATION OF STEEL HANDRAILS AND GUARDRAILS

Steel handrails and guardrails shall be installed in accordance with the manufacturers' written instructions.

3.6 #.1 INSTALLATION OF ALUMINUM CHAIR RAILS

Installation shall be as indicated. All fasteners shall be concealed. Bolts used to anchor aluminum alloy flanges shall be stainless steel of a size appropriate to the standard product of the manufacturer. Where aluminum or alloy fittings or extrusions are to be in contact with dissimilar metals or portland cement concrete, the contact surface shall be given a heavy coating of bituminous paint or asphalt varnish.

3.7 #.1 PARTITION POSTS AND OPENINGS

Posts shall be set in caps tap-screwed to clip angles in overhead construction, as indicated.

3.8 #.1 INSTALLATION OF SAFETY NOSINGS

Nosing shall be completely embedded in concrete before the initial set of the concrete occurs and shall finish flush with the top of the finish surface.

3.9 #.1 ALUMINUM GATES

Aluminum gates shall be installed in accordance with the manufacturers' written installation instructions.

3.10 #.1 INSTALLATION OF ALUMINUM HANDRAILS

Installation shall be by means of tightfitting dowel not less than 6 inches in length or by approved handrail system's manufacturer's recommendations. Dowel shall be welded to stringers or structural framework. Dowel shall be connected to post by concealed mechanical fasteners. Bolts used to anchor aluminum alloy posts shall be stainless steel of a size appropriate to the standard product of the manufacturer. Where aluminum or alloy fittings or extrusions are to be in contact with dissimilar metals or portland cement concrete, the contact surface shall be given a heavy coating of bituminous paint or asphalt varnish.

This page intentionally blank

SECTION 06100

ROUGH CARPENTRY

1 GENERAL

1.1 REFERENCES

The publications listed below form a part of this specification to the extent referenced. The publications are referred to in the text by basic designation only.

AMERICAN FOREST AND PAPER ASSOCIATION (AFPA)

AFPA-T901	(1991; Supple 1993; Errata/Addenda Apr 1995) National Design Specification for Wood Construction
AFPA T11-WCD1	(1988) Manual for Wood Frame Construction

AMERICAN INSTITUTE OF TIMBER CONSTRUCTION (AITC)

AITC-01	(1985) Timber Construction Manual
AITC 109	(1990) Preservative Treatment of Structural Glued Laminated Timber
AITC 111	(1979) Recommended Practice for Protection of Structural Glued Laminated Timber During Transit, Storage and Erection
AITC A190.1	(1992) Structural Glued Laminated Timber

AMERICAN SOCIETY FOR TESTING AND MATERIALS (ASTM)

ASTM F 547	(1977; R 1990) Definitions of Terms Relating to Nails for Use with Wood and Wood-Base Materials

AMERICAN WOOD PRESERVERS' ASSOCIATION (AWPA)

AWPA C2	(1995) Lumber, Timber, Bridge Ties, and Mine Ties - Preservative Treatment by Pressure Processes
AWPA C9	(1990) Plywood - Preservative Treatment by Pressure Processes
AWPA C20	(1991) Structural Lumber - Fire-Retardant Treatment by Pressure Processes
AWPA C27	(1991) Plywood - Fire-Retardant Treatment by Pressure Processes

AWPA C28	(1991) Standard for Preservative Treatment of Structural Glued Laminated Members and Laminations Before Gluing of Southern Pine, Pacific Coast Douglas Fir, Hemfir and Western Hemlock by Pressure Processes
AWPA M4	(1991) The Care of Preservative-Treated Wood Products
AWPA P5	(1992) Oil-Borne Preservatives

FACTORY MUTUAL ENGINEERING AND RESEARCH (FM)

FM P7825c	(1997) Approval Guide Building Materials

FEDERAL SPECIFICATIONS (FS)

FS FF-N-105	(Rev B; Am 3; Int Am 4; Notice 1) Nails, Brads, Staples and Spikes: Wire, Cut and Wrought
FS HH-I-558	(Rev C) Insulation, Blankets, Thermal (Mineral Fiber, Industrial Type)
FS HH-I-1972/GEN	(Basic; Am 1; Notice 1) Insulation Board, Thermal, Faced, Polyurethane or Polyisocyanurate

1.2 SUBMITTALS

Government approval is required for submittals with a "GA" designation; submittals having an "FIO" designation are for information only. The following shall be submitted in accordance with Section 01330 SUBMITTAL PROCEDURES:

SD-04 Drawings

Nailers and Nailing Strips; FIO

Drawings of field erection details, including materials and methods of fastening nailers in conformance with Factory Mutual wind uplift rated systems specified in other Sections of these specifications.

SD-13 Certificates

Grading and Marking; FIO

Manufacturer's certificates (audited by an American Lumber Standards approved agency) attesting that lumber and material not normally grade marked or exempt from being grade marked meet the specified requirements. Certificate of Inspection issued for grade marked material by an American Lumber Standards Committee (ALSC) recognized lumber inspection agency prior to shipment.

1.3 DELIVERY AND STORAGE

Materials shall be delivered to the site in undamaged condition, stored off ground in fully covered, well ventilated areas, and protected from extreme changes in temperature and humidity. Laminated timber shall be handled and stored in accordance with AITC 111.

2 PRODUCTS

2.1 LUMBER AND SHEATHING

2.1.1 Grading and Marking

2.1.1.1 Lumber Products

Solid sawn and finger-jointed lumber shall bear an authorized gradestamp or grademark recognized by ALSC, or an ALSC recognized certification stamp, mark, or hammerbrand. Surfaces that are to be exposed to view shall not bear grademarks, stamps, or any type of identifying mark. Hammer marking will be permitted on timbers when all surfaces will be exposed to view.

2.1.2 Sizes

Lumber and material sizes shall conform to requirements of the rules or standards under which produced. Unless otherwise specified, lumber shall be surfaced on four sides. Size references, unless otherwise specified, are nominal sizes, and actual sizes shall be within manufacturing tolerances allowed by the standard under which the product is produced.

2.1.3 Moisture Content

At the time lumber and other materials are delivered and when installed in the work their moisture content shall be as follows:

a. Treated and Untreated Lumber Except Roof Planking:

4 inches or less, nominal thickness, 19 percent maximum.
5 inches or more, nominal thickness, 23 percent maximum in a 3 inch perimeter of the timber cross-section.

b. Materials Other Than Lumber: In accordance with standard under which product is produced.

2.1.4 Treatment

Exposed areas of treated wood that are cut or drilled after treatment shall receive a field treatment in accordance with AWPA M4. Items of all-heart material of cedar, cypress, or redwood will not require preservative treatment, except when in direct contact with soil. Except as specified for all-heart material of the previously mentioned species, the following items shall be treated:

a. Wood members in contact with or within 18 inches of soil.

b. Wood members in contact with water.

c. Wood members exposed to the weather.

d. Wood members set into concrete regardless of location, including flush-with-deck wood nailers for roofs.

e. Wood members in contact with concrete that is in contact with soil or water or that is exposed to weather.

2.1.4.1 Lumber

Lumber shall be treated in accordance with AWPA C2 with waterborne preservatives listed in AWPA P5 to a retention level as follows:

a. 0.25 pcf intended for above ground use.

2.2 #.1 MOISTURE CONTENT

At the time lumber and other materials are delivered and when installed in the work their moisture content shall be as follows:

a. Treated and Untreated Lumber Except Roof Planking:

4 inches or less, nominal thickness, 19 percent maximum. 5 inches or more, nominal thickness, 23 percent maximum in a 3 inch perimeter of the timber cross-section.

b. Materials Other Than Lumber: In accordance with standard under which product is produced.

2.2.1 Miscellaneous Wood Members

2.2.1.1 Nonstress Graded Members

Members shall include furring, shims, and blocking strips. Sizes shall be as indicated or as required for intended use. Species shall be Douglas Fir/Larch, Grade No. 2 or better.

2.2.1.2 Blocking

Blocking shall be standard or number 2 grade.

2.2.1.3 Rough Bucks and Frames

Rough bucks and frames shall be straight standard or number 2 grade.

2.3 ACCESSORIES AND NAILS

Markings shall identify both the strength grade and the manufacturer. Accessories and nails shall conform to the following:

2.3.1 Bolts: Lag, Toggle, and Miscellaneous Bolts and Screws

Type, size, and finish best suited for intended use. Finish options include zinc compounds, cadmium, and aluminum paint impregnated finishes.

2.4 #.1 CLIP ANGLES

Steel, 3/16 inch thick, size best suited for intended use; or zinc-coated steel or iron commercial clips designed for connecting wood members.

2.4.1 Expansion Shields

Type and size best suited for intended use.

2.4.2 Nails and Staples

ASTM F 547, size and type best suited for purpose; staples shall be as recommended by the manufacturer of the materials to be joined. In general, 8-penny or larger nails shall be used for nailing through 1 inch thick lumber and for toe nailing 2 inch thick lumber; 16-penny or larger nails shall be used for nailing through 2 inch thick lumber. Nails used with treated lumber and sheathing shall be galvanized. Nailing shall be in accordance with the recommended nailing schedule contained in AFPA T11-WCD1. Where detailed nailing requirements are not specified, nail size and spacing shall be sufficient to develop an adequate strength for the connection. The connection's strength shall be verified against the nail capacity tables in AFPA-T901. Reasonable judgement backed by experience shall ensure that the designed connection will not cause the wood to split. If a load situation exceeds a reasonable limit for nails, a specialized connector shall be used.

3 EXECUTION

3.1 INSTALLATION OF MISCELLANEOUS WOOD MEMBERS

3.1.1 Blocking

Blocking shall be provided as necessary for application of materials or building items. Blocking shall be cut to fit between framing members and rigidly nailed thereto.

3.1.2 Nailers and Nailing Strips

Nailers and nailing strips shall be provided as necessary for the attachment of finish materials. Stacked nailers shall be assembled with spikes or nails spaced not more than 18 inches on center and staggered. Beginning and ending nails shall not be more than 6 inches for nailer end. Ends of stacked nailers shall be offset approximately 12 inches in long runs and alternated at corners. Anchors shall extend through the entire thickness of the nailer. Strips shall be run in lengths as long as practicable, butt jointed, cut into wood framing members when necessary, and rigidly secured in place. Nailers and nailer installation for Factory Mutual wind uplift rated roof systems specified in other sections of these specifications shall conform to FM P7825c.

3.1.3 Rough Bucks and Frames

Rough bucks shall be set straight, true, and plumb, and secured with anchors near top and bottom of each wood member and at intermediate intervals of not more than 3 feet. Anchors for concrete shall be expansion bolts, and anchors for masonry shall be 3/16 by 1-1/4 inch steel straps extending not less than 8 inches into the masonry and turned down 2 inches into the masonry.

SECTION 06200

FINISH CARPENTRY

1 GENERAL

1.1 REFERENCES

The publications listed below form a part of this specification to the extent referenced. The publications are referred to in the text by basic designation only.

AMERICAN HARDBOARD ASSOCIATION (AHA)

AHA 135.6	(1990) Hardboard Siding

AMERICAN PLYWOOD ASSOCIATION (APA)

APA PRP-108	(1991; Rev May 1991) Performance Standards and Policies for Structural-Use Panels

AMERICAN SOCIETY FOR TESTING AND MATERIALS (ASTM)

ASTM D 1435	(1985) Outdoor Weathering of Plastics
ASTM D 2898	(1981; R 1986) Accelerated Weathering of Fire-Retardant-Treated Wood for Fire Testing
ASTM D 3679	(1992) Rigid Poly(Vinyl Chloride) (PVC) Siding

AMERICAN WOOD-PRESERVERS' ASSOCIATION (AWPA)

AWPA C9	(1990) Plywood - Preservative Treatment by Pressure Processes
AWPA C20	(1991) Structural Lumber - Fire-Retardant Treatment by Pressure Processes
AWPA C27	(1991) Plywood - Fire-Retardant Treatment by Pressure Processes
AWPA M4	(1991) The Care of Preservative-Treated Wood Products
AWPA P5	(1992) Waterborne Preservatives

ARCHITECTURAL WOODWORK INSTITUTE (AWI)

AWI-02	(1988) Architectural Woodwork Quality Standards, Guide Specifications and Quality Certification Program

CALIFORNIA REDWOOD ASSOCIATION (CRA)

CRA-01	(1992) Standard Specifications for Grades of California Redwood Lumber

DEPARTMENT OF COMMERCE (DOC)

DOC PS 1	(1983) Construction and Industrial Plywood

FEDERAL SPECIFICATIONS (FS)

FS FF-N-105	(Rev B; Am 3; Int Am 4; Notice 1) Nails, Brads, Staples and Spikes: Wire, Cut and Wrought

NORTHEASTERN LUMBER MANUFACTURERS ASSOCIATION (NELMA)

NELMA-01	(1991) Standard Grading Rules for Northeastern Lumber

SOUTHERN CYPRESS MANUFACTURER'S ASSOCIATION (SCMA)

SCMA-01	(1986) Standard Specifications for Grades of Southern Cypress

SOUTHERN PINE INSPECTION BUREAU (SPIB)

SPIB-01	(1991; Supple 1 thru 4) Standard Grading Rules for Southern Pine Lumber

WEST COAST LUMBER INSPECTION BUREAU (WCLIB)

WCLIB Std 17	(1991) Grading Rules For West Coast Lumber

WESTERN WOOD PRODUCTS ASSOCIATION (WWPA)

WWPA-01	(1991; Supple No. 1) Western Lumber Grading Rules 91

WOOD MOULDING AND MILLWORK PRODUCERS ASSOCIATION (WMMPA)

WMMPA WM 6	(1987) Industry Standard for Non-Pressure Treating of Wood Millwork

1.2 SUBMITTALS

Government approval is required for submittals with a "GA" designation; submittals having an "FIO" designation are for information only. The following shall be submitted in accordance with Section 01330 SUBMITTAL PROCEDURES:

SD-01 Data

Shelf Brackets; FIO.

Manufacturer's printed data, showing texture, density, catalog cuts, and installation instructions.

SD-04 Drawings

Finish Carpentry; GA.

Drawings showing fabricated items and special mill and woodwork items. Drawings shall indicate materials and details of construction, methods of fastening, erection, and installation.

SD-14 Samples

Moldings and TrimFIO.

Samples shall be of sufficient size to show patterns, color ranges, and types, as applicable, of the material proposed to be used.

1.3 DELIVERY AND STORAGE

Materials shall be delivered to the site in undamaged condition, stored off ground in fully covered, well-ventilated areas, and protected from extreme changes in temperature and humidity.

2 PRODUCTS

2.1 WOOD ITEMS AND TRIM

2.1.1 Grading and Marking

Materials shall bear the grademark, stamp or other identifying marks indicating grades of material and rules or standards under which produced. Such identifying marks on a material shall be in accordance with the rule or standard under which the material is produced, including requirements for qualifications and authority of the inspection organization, usage of authorized identification, and information included in the identification. The inspection agency for lumber shall be certified by the Board of Review, American Lumber Standards Committee, to grade the species used. Except for plywood and lumber, bundle marking will be permitted in lieu of marking each individual piece. Surfaces that are to be architecturally exposed to view shall not bear grademarks, stamps, or other types of identifying marks.

2.1.2 Sizes and Patterns

Lumber sizes and patterns shall conform to rules or standards under which produced. Unless otherwise specified, lumber shall be surfaced on four sides. Sizes and patterns for materials other than lumber shall conform to requirements of the rules or standards under which produced. Size references, unless otherwise specified, are nominal sizes, and actual sizes shall be within manufacturing tolerances allowed by the standard under which the product is produced.

2.1.3 Moisture Content

The maximum moisture content of untreated trim and wood siding shall be 15 percent at the time of delivery to the jobsite and when installed. Moisture content of all other material shall be in accordance with the standard under which the product is produced.

2.1.4 Fire-Retardant Treatment

Fire-retardant treated lumber shall be pressure treated in accordance with AWPA C20. Fire-retardant treated plywood shall be pressure treated in accordance with AWPA C27. Material use shall be defined in AWPA C20and AWPA C27 for Interior Type A and B and Exterior Type. Treatment and performance inspection shall be by a qualified independent testing agency that establishes performance ratings, Each piece or bundle of treated material shall bear identification for the testing agency to indicate performance with such rating. Treated materials to be exposed to rain wetting shall be subjected to an accelerated weathering technique in accordance with ASTM D 2898, Method A, prior to being tested for compliance with AWPA C20 or AWPA C27. Items to be treated include: all veneer plywood in interior of building.

2.1.5 Window Sills

Elements shall be of the pattern indicated and shall be Birch or Alder Grade I and selected for grain and color. Finish shall be as indicated. Splices shall be used only to join solid pieces of wood over 10'-0" long.

2.1.5.1 Bulletin Board

Bulletin board shall have an aluminum frame of profile, finish, enclosure, and hardware as indicated with a hard board back (1/4-inch thick) with a self healing, tackable, granulated cork surface. Surface shall be of heat and pressure laminated granular cork and linseed oil. Attach tackable surface to hard board substrate.

2.1.6 Marker Board

Marker board shall have a writing surface of white melamine consisting of a 2.5 mil primer coat and a 2.5 mil finish coat for a total 5.0 mil or greater surface thickness. Marker board shall have an aluminum frame and be 1-/4 inch minimum thickness. Hardboard shall conform to AHA 135.6.

2.1.7 Utility Shelving

Utility shelving shall be a suitable species equal to or exceeding requirements of No. 3 Common white fir under WWPA-01, 1-inch thick; or plywood, interior type, Grade A-B, 1/2-inch thick, any species group.

2.2 #.1 WORKBENCH

Workbench shall have a work surface as indicated. Base shall be 14 gauge steel with legs adjustable to 1 inch increments to adjust the work surface from 30 to 36 inches.

2.3 #.1 TELEPHONE SHELF

Telephone shelf shall have an aluminum shelf bracket of profile, configuration, and finish as indicated. Wood shelf shall be 45 pound density particle board core finished with plastic laminate on all exposed surfaces. Shelf thickness shall be as required to fit in bracket. Plastic laminate pattern, color and finish shall be as indicated.

2.4 #.1 HAT AND COAT RACK

Hat and coat rack shall be a manufactured assembly composed of 1-1/8 inch square steel tubing end brackets with 3/4 inch diameter steel shelf rails and a 1 inch diameter welded tubular steel hangar pole, finish shall be satin finish stainless steel.

2.5 FASTENERS

Nails shall be the size and type best suited for the purpose and shall conform to FS FF-N-105. Nails shall be hot-dip galvanized. Screws shall be size best suited for purpose.

3 EXECUTION

3.1 GENERAL

3.2 TRIM

Molding and interior trim shall be installed straight, plumb, level and with closely fitted joints. Exposed surfaces shall be machine sanded at the mill. Molded work shall be coped at returns and interior angles and mitered at external corners. Intersections of flatwork shall be shouldered to ease any inherent changes in plane. Countersink screws and plug with face grain plugs to match adjacent finish.

3.3 WOODWORK ITEMS

3.3.1 Marker Boards and Bulletin Tack Boards

Items shall be installed in accordance with the manufacturer's recommendation. See drawings for backstop support.

3.3.2 Shelving

Shelving shall be anchored to supporting construction. Shelves shall be supported by a steel framework and brackets as required to limit deflection to 1/4-inch between supports with a load of 35 lb per lineal foot.

3.3.3 Clothes Hanger Rods

Rods shall be provided where indicated and in all closets having hook strips. Rods shall be hardwood 1-1/2 inchesin diameter. Rods shall be set parallel with the front edges of the shelving, and shall be supported at each end by suitable sockets, and by intermediate brackets spaced at not more than 4-footcenters.

TABLE I. SPECIES AND GRADE TABLES

Grading Rules	Species	Choice	Clear	C Select	C & Better
	Balsam Fir		X		
WCLIB Std 17	Douglas Fir			X	
	Larch				X
	Hemlock Fir				X
	Mountain Hemlock				X
	Sitka Spruce				X
WWPA-01	Douglas Fir			X	
	Larch				X
	Hemlock Fir		X		
	Mountain Hemlock				X
	Western Larch		X		
	Idaho White Pine	X			
	Lodgepole Pine		X		
	Ponderosa Pine		X		
	Sugar Pine		X		
	Englemann Spruce		X		
	Douglas Fir South		X		
	Subalpine Fir		X		

SECTION 07112

BITUMINOUS WATERPROOFING

1 GENERAL

1.1 REFERENCES

The publications listed below form a part of this specification to the extent referenced. The publications are referred to in the text by basic designation only.

AMERICAN SOCIETY FOR TESTING AND MATERIALS (ASTM)

ASTM C 208	(1995) Cellulosic Fiber Insulating Board
ASTM D 41	(1994) Asphalt Primer Used in Roofing, Dampproofing, and Waterproofing
ASTM D 173	(1994) Bitumen-Saturated Cotton Fabrics Used in Roofing and Waterproofing
ASTM D 449	(1989; R 1994) Asphalt Used in Dampproofing and Waterproofing
ASTM D 1327	(1994) Bitumen-Saturated Woven Burlap Fabrics Used in Roofing and Waterproofing
ASTM D 1668	(1994) Glass Fabrics (Woven and Treated) for Roofing and Waterproofing
ASTM D 4586	(1993) Asphalt Roof Cement, Asbestos Free

1.2 SUBMITTALS

Government approval is required for submittals with a "GA" designation; submittals having an "FIO" designation are for information only. The following shall be submitted in accordance with Section 01330 SUBMITTAL PROCEDURES:

SD-01 Data

Reinforcing Fabric; FIO.

Manufacturer's data including technical information which indicates full compliance with this section.

SD-06 Instructions

Application; FIO.

Manufacturer's installation instructions, before delivery of materials to the site. Instructions shall specify acceptable range of asphalt

Application temperatures and the maximum temperature for holding asphalt in a heated condition.

SD-13 Certificates

Materials; FIO.

Certificates from manufacturer attesting that asphalt manufactured and shipped to jobsite meets the specified requirements.

1.3 QUALIFICATIONS

Work shall be performed by skilled laborers thoroughly experienced in the type of bituminous waterproofing work specified to meet the requirements of the contract.

1.4 DELIVERY, STORAGE AND HANDLING

Waterproofing materials shall be delivered to the project site in the original sealed containers bearing the name of the manufacturer, contents and brand name. Asphalt shall be protected from freezing in a weathertight enclosure. Reinforcement fabrics shall be protected from moisture damage and moisture absorption in a weathertight enclosure or shall be stored off the ground on pallets, and covered on top and all sides with breathable-type canvas tarpaulins. Plastic sheets cause condensation buildup and therefore shall not be used to cover waterproofing materials. Damaged or deteriorated materials shall be removed from project site.

2 PRODUCTS

2.1 ASPHALT WATERPROOFING

2.1.1 Primer

Primer for hot-applied asphalt waterproofing shall conform to ASTM D 41, asbestos-free, non-fibrated, manufactured with highly ductile soft asphalts and selected hydrocarbons.

2.1.2 Below-Grade Hot-Applied Asphalt

Hot-applied asphalt for below-grade applications shall conform to ASTM D 449, Type I, asbestos-free, manufactured from crude petroleum, suitable for use with membrane waterproofing systems.

2.1.3 Reinforcement Fabrics

2.1.3.1 Cotton Fabrics

Cotton fabrics shall be woven entirely of cotton conforming with ASTM D 173, thoroughly and uniformly saturated with asphalt.

2.1.3.2 Woven Burlap Fabrics

Woven burlap fabrics shall be composed of 100 percent jute fiber and two cotton threads at each selvage conforming with ASTM D 1327, thoroughly and uniformly saturated with asphalt. The fabric mesh shall not be completely closed or sealed by the process of saturation. Sufficient porosity shall be

maintained to allow successive moppings of the plying asphalt to seep through. The surface shall not be coated or covered with talc or any other substances that will interfere with the adhesion between fabric and plying asphalt. The fabric surface shall be uniformly smooth and free of irregularities, folds and knots. The finished woven burlap fabrics shall be free of ragged edges, untrue edges, breaks or cracks, and other visible external defects.

2.1.3.3 Glass Fabrics

Glass fabrics shall conform to ASTM D 1668 Type I, asphalt-treated woven glass waterproofing fabrics coated with asphalt.

2.1.4 Flashing Cement

Flashing cement shall conform to ASTM D 4586, Type I, trowel grade, asbestos free, manufactured from asphalts characterized as adhesive, healing and ductile.

2.2 INSULATION BOARDS

Insulation boards shall conform to ASTM C 208 cellulosic fiber boards, construction grade, 1/2-inch thick, fibrous-felted homogeneous panel. Insulation boards shall be manufactured from ligno-cellulosic fibers (wood or cane) by a felting or molding process, asphalt-saturated or coated, with a density of 10 to 31 lbs. per square foot. Surfaces of insulation boards shall be free of cracks, lumps, excessive departure from planeness, or other defects that adversely affect performance.

3 EXECUTION

3.1 SURFACE PREPARATION

Surfaces scheduled for bituminous waterproofing shall be prepared in accordance with waterproofing manufacturer's recommendations. Surface preparation shall be approved prior to waterproofing application.

3.1.1 Protection of Surrounding Areas

Before starting the waterproofing work, the surrounding areas and surfaces shall be protected from spillage and migration of asphalt onto other work. Drains and conductors shall be protected from clogging with asphalt.

3.1.2 Masonry Surfaces

Surfaces shall be free of oil, grease, dirt, laitance, loose material, frost, debris and other contaminants. Mortar joints shall be flush and free of extraneous mortar and chipped or broken masonry.

3.1.3 Concrete Surfaces

Surfaces shall be properly cured, free of form release agents, oil, grease, dirt, laitance, loose material, frost, debris and other contaminants. Form ties shall be cut flush with surface. Sharp protrusions and form match lines shall be removed. Holes, voids, spalled areas and cracks which can damage waterproofing materials shall be repaired. Rough surfaces shall be parged with a well-adhering coat of cement mortar.

3.1.4 Metal Surfaces

Surfaces shall be dry and be free of rust, scale, loose paint, oil, grease, dirt, frost and debris.

3.2 HOT-APPLIED ASPHALT WATERPROOFING

Asphalt waterproofing shall be applied when the ambient temperature is 40 degrees F or above. Heating kettles and tanks shall be provided with automatic thermostatic control capable of maintaining asphalt temperature. Controls shall be calibrated and maintained in working order for duration of work. At time of application, asphalt shall not be heated above the equiviscous temperature (EVT) recommended by manufacturer. Immediately before use, temperature shall be measured with a portable thermometer at the point of application. EVT and flashpoint temperatures of asphalt in kettle shall be conspicuously posted on kettle. Asphalt with a temperature not conforming to the manufacturer's recommendations shall be returned to the kettle. Asphalt overheated by more than 50 degrees F for more than 1 hour shall be removed from site.

3.2.1 Below-Grade Wall Waterproofing

Waterproofing for foundation walls shall consist of a 2-ply hot-applied asphalt membrane system. Fabrics shall be installed using the "shingle" method. Joints shall be caulked prior to primer applications. Primer shall be applied at a rate of 1/2 gallon per 100 square feet. Fabrics shall be overlapped at ends and staggered a minimum 19 inch for 2-ply system. End-to-end taping is not acceptable. Each fabric shall be firmly embedded into a solid uniform coating of hot asphalt at a rate of 20 pounds per 100 square feet by pressing with broom. Fabrics shall not touch fabrics. Hot asphalt shall penetrate each fabric to provide the required adhesion. Asphalt between fabrics shall not be excessive to prevent slippage. Waterproofing system consisting of two or more fabrics shall be provided with fabric reinforcement at corners, angles, over construction joints, and in locations where waterproofing fabrics are subject to unusual stress.

3.3 CLEAN-UP

Surfaces of other work which are stained with waterproofing materials shall be cleaned with a cleaner recommended by waterproofing manufacturer.

3.4 PROTECTION OF COMPLETED WORK

3.4.1 Wall Waterproofing

Waterproofing against which backfill is to be placed shall be protected with a single layer of insulation board. Insulation boards shall be pressed into the final mopping while the asphalt is still hot, with edges of boards placed into moderate contact and joints staggered. For two-layer installation, joints in second layer shall be staggered over joints in first layer. Where surfaced insulation board is used, the surfaced side shall face outward. Boards shall be carefully and neatly fitted around projections, and shall cover the entire surface of the waterproofing materials. Waterproofing system not covered with protection boards shall be protected to prevent damage from subsequent building operations. Installed boards shall not remain exposed at the end of a work day.

END OF SECTION

This page intentionally blank

SECTION 07220

ROOF INSULATION

1 GENERAL

1.1 REFERENCES

The publications listed below form a part of this specification to the extent referenced. The publications are referred to in the text by basic designation only.

AMERICAN NATIONAL STANDARDS INSTITUTE (ANSI)

ANSI A208.1	(1993) Particleboard

AMERICAN SOCIETY FOR TESTING AND MATERIALS (ASTM)

ASTM C 208	(1995) Cellulosic Fiber Insulating Board
ASTM C 552	(1991) Cellular Glass Thermal Insulation
ASTM C 578	(1995) Rigid, Cellular Polystyrene Thermal Insulation
ASTM C 726	(1993) Mineral Fiber Roof Insulation Board
ASTM C 728	(1991) Perlite Thermal Insulation Board
ASTM C 984	(1994) Perlite Board and Rigid Cellular Polyurethane Composite Roof Insulation
ASTM C 1050	(1991) Rigid Cellular Polystyrene - Cellulosic Fiber Composite Roof Insulation
ASTM C 1289	(1995) Faced Rigid Cellular Polyisocyanurate Thermal Insulation Board
ASTM D 41	(1994) Asphalt Primer Used in Roofing, Dampproofing, and Waterproofing
ASTM D 226	(1994) Asphalt-Saturated Organic Felt Used in Roofing and Waterproofing
ASTM D 312	(1995) Asphalt Used in Roofing
ASTM D 2178	(1989) Asphalt Glass Felt Used in Roofing and Waterproofing
ASTM D 4586	(1993) Asphalt Roof Cement, Asbestos Free
ASTM D 4897	(1994) Asphalt-Coated Glass-Fiber Venting Base Sheet Used in Roofing

ASTM F 547	(1977; R 1990) Terminology of Nails for Use with Wood and Wood-Base Materials

FACTORY MUTUAL ENGINEERING AND RESEARCH (FM)

FM P7825	(1995; Supple 1; Supple II; Supple III) Approval Guide

UNDERWRITERS LABORATORIES (UL)

UL-01	(1996) Building Materials Directory

1.2 SUBMITTALS

Government approval is required for submittals with a "GA" designation; submittals having an "FIO" designation are for information only. The following shall be submitted in accordance with Section 01330 SUBMITTAL PROCEDURES:

SD-06 Instructions

Application of Insulation; GA.

Insulation manufacturer's recommendations for the application and installation of insulation.

SD-08 Statements

Inspection; GA.

The inspection procedure for insulation installation, prior to start of roof insulation work.

SD-13 Certificates

Insulation; FIO. Glass Roofing Felt; FIO.

Certificate attesting that the expanded perlite or polyisocyanurate insulation contains recovered material and showing estimated percent of recovered material. Certificates of compliance for felt materials.

1.3 STORAGE OF MATERIALS

Extruded polystyrene shall be stored in accordance with manufacturer's instructions. Other insulation, base sheet, and felt shall be kept dry at all times, before, during, and after delivery to the site and shall be stored in an enclosed building or in a closed trailer. Wet insulation, wet base sheet or wet felt shall be permanently removed from the site. Felts shall be stacked on end one level high. Felt rolls shall be maintained at a temperature above 50 degrees F for 24 hours immediately before laying.

1.4 FIRE CLASSIFICATION

Insulation shall have been tested as part of a roof construction assembly of the type used in this project and the construction shall be listed as Fire-Classified in UL-01 or Class I in FM P7825.

2 PRODUCTS

2.1 BITUMINOUS MATERIALS

Bituminous materials shall conform to the following requirements:

2.1.1 Asphalt Bitumen

ASTM D 312, Type III or IV. Asphalt flash point, finished blowing temperature, and equiviscous temperature (EVT) shall be indicated on bills of lading or on individual containers.

2.1.2 Asphalt Cement

ASTM D 4586, Type I for horizontal surfaces; Type II for vertical surfaces.

2.1.3 Asphalt Primer

ASTM D 41.

2.2 INSULATION

Insulation shall be a standard product of the manufacturer and shall be factory marked with the manufacturer's name or trade mark, the material specification number, the R-value at 75 degrees F,and the thickness. Minimum thickness shall be as recommended by the manufacturer. Boards shall be marked individually. The thermal resistance of insulation shall be not less than the R-value shown on the drawings. The insulation manufacturing process shall not include chlorofluoro carbons (CFC) or formaldehydes. Insulation and fiberboard shall contain the highest practicable percentage of material which has been recovered or diverted from solid waste (e.g., postconsumer waste), but not including material reused in a manufacturing process. Where two materials have comparable price and performance, the one having the higher recovered material content shall be selected. Insulation shall be one, or a combination of the following materials:

2.2.1 Cellular Glass

ASTM C 552, Type IV.

2.2.2 Composite Board Insulation

ASTM C 726, or ASTM C 984 or ASTM C 1050 or ASTM C 1289Type III, or ASTM C 1289 Type VI. Perlite, in composite board, may be replaced with ANSI A208.1 wood particle board, 7/16 inch minimum thickness, provided that the composite board meets specified physical requirements. Composite board with wood particle board shall conform to ASTM C 1289, Type V.

2.2.3 Expanded-Perlite Insulation Board

ASTM C 728 with a minimum recovered material content of 23 percent of the expanded perlite portion of the board.

2.2.4 Fiberboard

ASTM C 208 Type II, Grade 2, roof insulating board with a minimum recovered material content of 80 percent, treated with sizing, wax or bituminous

impregnation. Bituminous impregnation shall be limited to 4 percent by weight when used over steel decks.

2.2.5 Mineral-Fiber Insulation Board

ASTM C 726.

2.2.6 Polyisocyanurate

ASTM C 1289, Type I, or ASTM C 1289 Type II, having minimum recovered material content of 9 percent by weight of the polyisocyanurate portion of the board.

2.3 NAILS AND FASTENERS

Nails and fasteners shall conform to the following requirements:

2.3.1 Nails for Fastening Insulation to Flush Mounted Wood Nailers

ASTM F 547 of sufficient length to hold insulation securely in place.

2.3.2 Fasteners

Insulation manufacturer's recommendations except holding power, when driven, shall be not less than 120 pounds each in steel deck. Fasteners for steel shall conform to FM P7825 for Class I roof deck construction, and shall be spaced to withstand an uplift pressure of 90 pounds per square foot.

2.3.3 Metal Disks

Flat and not less than 30 gauge thickness. Disks used with nails or fasteners for securing fiberboard insulation shall be minimum l inch diameter. Disks used with nails or fasteners for securing other board insulation shall be minimum 2-1/8 inches in diameter.

2.4 VENTING INORGANIC BASE SHEET

ASTM D 4897, Type II, Non-perforated, with spot mopping holes where specified.

2.5 GLASS ROOFING FELT

ASTM D 2178, Type IV.

2.6 WOOD NAILERS

Wood nailers shall conform to Section 06100 ROUGH CARPENTRY including preservative treatment. Edge nailers shall be not less than nominal 6 inches wide and of thickness to finish flush with the top surface of the insulation. Surface mounted nailers shall be a nominal 3 inches wide by the full thickness of the insulation.

3 EXECUTION

3.1 COORDINATION REQUIREMENTS

Insulation and roofing membrane shall be finished in one operation up to the line of termination at the end of each day's work. Completed sections shall be waterproofed when more than one day is required to finish the roofing. Phased construction will not be permitted.

3.2 ENVIRONMENTAL CONDITIONS

Air temperature shall be above 40 degrees F and there shall be no visible ice, frost, or moisture on the roof deck when the insulation and roofing are installed.

3.3 SUBSTRATE PREPARATION

The substrate construction of any bay or section of the building shall be completed before insulation or vapor retarder work is begun thereon. Vents and other items penetrating the roof shall be secured in position and properly prepared for flashing. Prior to application of vapor retarder or insulation, substrate joints shall be covered with a 4 inch strip of roofing felt, embedded in and coated with asphalt cement. Substrate surface shall be smooth, clean, and dry at time of application.

3.4 HEATING OF ASPHALT

Asphalt shall not be heated higher than 75 degrees Fabove the EVT or 50 degrees F below the flash point, or 525 degrees F, whichever is lower. EVT and flash point temperatures of asphalt in the kettle shall be conspicuously posted on the kettle. Kettle shall be provided with automatic thermostatic controls and an accurate thermometer. Kettle operators shall be in attendance at all times during heating to ensure that the maximum temperature is not exceeded. Asphalt shall be applied within a range of 25 degrees F below or above the EVT, or as specified by the manufacturer. Application temperature shall be measured at the mop bucket or mechanical applicator. Asphalt at a temperature below this range shall be returned to the kettle. Flame-heated equipment shall not be placed on the roof.

3.5 VAPOR RETARDER

3.5.1 General Application

Vapor retarder shall consist of two plies of roofing felt, mopped at right angle to the slope, with 6 inch end laps staggered at least 12 inches. The full 19 inch starter ply and full 36 inch wide ply sheets shall be placed, in succession, in hot asphalt immediately behind the applicator. Each ply shall be solid mopped in not less than 20 nor more than 30 pounds of asphalt per square. A squeegee shall be used with glass felts and a broom shall be used with organic felts to embed the felts, eliminate air pockets and obtain adhesion between the plies. Side and end laps shall be completely sealed. Asphalt shall be visible beyond all edges of each ply as it is being installed. Plies shall be laid free of wrinkles, creases or fishmouths. Workers shall not walk on mopped surfaces when the asphalt is sticky. For slopes exceeding 1/2 inch per foot, each ply shall be nailed 2 and 6 inches from the upper edge with nails spaced 12 inches on centers and staggered in each row.

3.5.2 Edge Requirements

At walls, eaves and rakes, the vapor retarder organic felts shall be extended 9 inches, or separate organic felt plies shall be extended 9 inches, with not less than 9 inches on the substrate, and the extended portion turned back and mopped in over the top of the vapor retarder. At roof penetrations other than walls, eaves and rakes, the vapor retarder or separate plies shall be extended 9 inches to form a lap which shall later be folded back over the edge of the insulation. Asphalt roof cement shall be used under the vapor retarder for at least 9 inches from walls, eaves, rakes and other penetrations.

3.5.3 Over First Layer of Insulation on Steel Decks

The 2-ply vapor retarder shall be applied as specified above except that venting inorganic base sheet shall be deleted.

3.6 INSTALLATION OF WOOD NAILERS

Nailers shall be secured to steel decks as recommended by steel deck manufacturer. Bolt anchors shall have nuts and washers countersunk, and bolts shall be cut flush with top of nailer. Powder-actuated fasteners, sized and spaced for nailer anchorage equivalent to that specified and indicated, may be used when approved. Surface mounted nailers shall be installed parallel with the roof slope and shall be spaced not over 4 feet face-to-face, except that where the insulation units are less than 4 feet in length the nailers shall be spaced to minimize cutting of the insulation.

3.7 APPLICATION OF INSULATION

Insulation shall be laid in two or more layers. Units of insulation shall be laid in courses parallel with the roof slope. End and edge joints shall be staggered. Insulation shall be cut to fit neatly against adjoining surfaces. Insulation boards shall be tightly butted and secured to the steel deck. Joints in successive layers shall be staggered with respect to joints of preceding layer. Where insulation is applied over steel deck, long edge joints shall continuously bear on surfaces of the steel deck. Insulation which can be readily lifted after installation is not considered to be adequately secured. Insulation shall be applied so that all roof insulation applied each day is waterproofed the same day. Phased construction will not be permitted. Application of impermeable faced insulation shall be performed without damage to the facing. Insulation shall be tapered to slope to roof drain or scupper. Insulation shall slope 1/4 inch per foot minimum.

3.7.1 Mechanical Fastening

On steel decks, the first layer of insulation shall be mechanically fastened. Method of attachment shall be in accordance with recommendations of the insulation manufacturer and requirements specified.

3.7.2 Installation

Except for the first layer on steel deck, insulation layers shall be laid in solid moppings of hot asphalt applied at a rate of at least 20 pounds per square. Asphalt shall not be applied further than one panel length ahead of

roof insulation being installed. Where roof slopes are greater than 1/2 inch per foot, roof insulation shall be held in place by both asphalt mopping and mechanical fasteners. Asphalt primer shall be applied at the rate of 1 gallon per square over the entire surface to be mopped when the insulation is applied over concrete deck. The edges of insulation boards adjoining vented nailers shall be kept free of asphalt.

3.7.3 Protection Requirements

The insulation shall be kept dry at all times. Insulation boards shall not be kicked into position. Exposed edges of the insulation shall be protected by cutoffs at the end of each work day or whenever precipitation is imminent. Cutoffs shall be 2 layers of bituminous-saturated felt set in plastic bituminous cement. Cutoffs shall be removed when work is resumed. Edges of insulation at open spaces between insulation and parapets or other walls and spaces at curbs, scuttles, and expansion joints, shall be protected until permanent roofing and flashing is applied. Storing, walking, wheeling, or trucking directly on insulation or on roofed surfaces will not be permitted. Smooth, clean board or plank walkways, runways, and platforms shall be used, as necessary to distribute weight to conform to a 20 pounds per square foot live load limit.

3.8 INSPECTION

The Contractor shall establish and maintain an inspection procedure to assure compliance of the installed roof insulation with the contract requirements. Any work found not to be in compliance with the contract shall be promptly removed and replaced or corrected in an approved manner. Quality control shall include, but not be limited to, the following:

a. Observation of environmental conditions; number and skill level of insulation workers; start and end time of work.

b. Verification of certification, listing or label compliance with FM P7825.

c. Verification of proper storage and handling of insulation and vapor retarder materials before, during, and after installation.

d. Inspection of vapor retarder application, including edge envelopes and mechanical fastening.

e. Inspection of mechanical fasteners; type, number, length, and spacing.

f. Coordination with other materials, cants, sleepers, and nailing strips.

g. Inspection of insulation joint orientation and laps between layers, joint width and bearing of edges of insulation on deck.

h. Installation of cutoffs and proper joining of work on subsequent days.

i. Continuation of complete roofing system installation to cover insulation installed same day.

END OF SECTION

SECTION 07250

SPRAY-APPLIED FIREPROOFING

1 GENERAL

1.1 REFERENCES

The publications listed below form a part of this specification to the extent referenced. The publications are referred to in the text by basic designation only.

AMERICAN SOCIETY FOR TESTING AND MATERIALS (ASTM)

ASTM E 119	(1995a) Fire Tests of Building Construction and Materials
ASTM E 605	(1993) Thickness and Density of Sprayed Fire-Resistive Material (SFRM) Applied to Structural Members
ASTM E 736	(1992) Cohesion/Adhesion of Sprayed Fire-Resistive Materials Applied to Structural Members
ASTM E 759	(1992) Effect of Deflection on Sprayed Fire-Resistive Material Applied to Structural Members
ASTM E 760	(1992) Effect of Impact on Bonding of Sprayed Fire-Resistive Material Applied to Structural Members
ASTM E 761	(1992) Compressive Strength of Sprayed Fire-Resistive Material Applied to Structural Members
ASTM E 937	(1993) Corrosion of Steel by Sprayed Fire-Resistive Material (SFRM) Applied to Structural Members
ASTM E 1042	(1992) Acoustically Absorptive Materials Applied by Trowel or Spray
ASTM G 21	(1990) Determining Resistance of Synthetic Polymeric Materials to Fungi

UNDERWRITERS LABORATORIES (UL)

UL-05	(1996; Supple) Fire Resistance Directory (3 Vol.)
UL 263	(1992) Fire Tests of Building Construction and Materials

1.2 SUBMITTALS

Government approval is required for submittals with a "GA" designation; submittals having an "FIO" designation are for information only. The following shall be submitted in accordance with Section 01330 SUBMITTAL PROCEDURES:

SD-01 Data

Fireproofing Material; GA.

Data identifying performance characteristics of fireproofing material. Data shall include recommended application requirements and indicate thickness of fireproofing that must be applied to achieve each required fire rating.

SD-09 Reports

UL Test Assembly; FIO.

Reports and test records, attesting that the fireproofing material conforms to the specified requirements. Each test report shall conform to the report requirements specified by the test method.

Field Tests; FIO.

Test reports documenting results of tests on the applied material in the project. Report shall include defects identified, repair procedures, and results of the retests when required.

SD-13 Certificates

Installer Qualifications; FIO.

Manufacturer's certification that each listed installer is qualified and trained to install the specified fireproofing. Evidence that each fireproofing installer has had a minimum of 3 years experience in installing the specified type of fireproofing.

Surface Acceptability; FIO.

Manufacturer's certification that surfaces to be protected have been inspected and are acceptable to receive spray-applied fireproofing. The statement shall list the structural members and the areas that have been inspected and certified.

Manufacturer's Inspection; GA.

Manufacturer's certification that the spray-applied fireproofing in the entire project complies with the manufacturer's criteria and recommendations.

SD-14 Samples

Spray-Applied Fireproofing; GA.

One sample panel, 18 inches square, for each specified type of fireproofing. Also, a designated sample area of not less than 100 square feet shall be

prepared. Sample area shall be representative of typical installation of fireproofing including metal decks, beams, columns and attachments. Equipment, materials and procedures used in the sample area shall be the same as, or representative of that to be used in the work. The sample area shall be approved prior to proceeding with fireproofing work in any other area. The approved sample area shall be used as a reference standard for applied fireproofing material. Sample area shall remain in place and open to observation until all spray-applied fireproofing is completed and accepted, at which time it may become part of the work.

1.3 DELIVERY AND STORAGE

Packaged material shall be delivered in the original unopened containers, marked to show the names of the brand and the manufacturer. Fireproofing material shall be kept dry until ready to be used, and shall be stored off the ground, under cover and away from damp surfaces. Damaged or opened containers will be rejected. Material with shelf-life shall be applied prior to expiration of the shelf-life.

1.4 ENVIRONMENTAL CONDITIONS

1.4.1 Temperature

Substrate and ambient air temperatures shall be maintained above 40 degrees F during application and for 24 hours before and after application. Relative humidity shall be maintained within the limits recommended by the fireproofing manufacturer.

1.4.2 Ventilation

Adequate ventilation shall be provided to properly dry the fireproofing after application. In enclosed areas, a minimum of 4 air exchanges per hour shall be provided by forced air circulation.

1.5 INSTALLER QUALIFICATIONS

Each installer of fireproofing material shall be trained and have a minimum of 3 years experience in the installation of fireproofing of the type specified.

1.6 FIRE RESISTANCE RATING

Fire resistance ratings shall be in accordance with the fire rated assemblies listed in UL-05. Proposed materials not listed in UL-05shall have fire resistance ratings at least equal to the UL-05 ratings as determined by an approved independent testing laboratory based on tests specified in UL 263 or ASTM E 119.

1.7 EXTENT OF FIREPROOFING

Fireproofing shall not be applied to structural steel and underside of deck in elevator machine room, and steel bearing members in elevator hoistways. All other structural steel, and the underside of steel floor and steel roof decks shall be protected with spray-applied fireproofing to a fire resistance hour-rating as indicated.

2 PRODUCTS

2.1 SPRAY-APPLIED FIREPROOFING

Spray-applied fireproofing material, including sealer, shall conform to ASTM E 1042, Class (a), Category A, either Type I or Type II, except that the dust removed shall not exceed 0.0025 gram per square foot of fireproofing material applied as specified in the project. Material shall be asbestos free, and shall resist fungus for a period of 28 days when tested in accordance with ASTM G 21.

2.1.1 Dry Density and Cohesion/Adhesion

Fireproofing shall have a minimum ASTM E 605 dry density and ASTM E 736 cohesion/adhesion properties as follows:

2.1.1.1 Concealed Structural Components

Fireproofing for structural components concealed above the ceiling, or within a wall, chase, or furred space, shall have a minimum average applied dry density of 15 pounds per cubic foot and a cohesion/adhesion strength of 200 pounds per square foot.

2.1.1.2 Exposed Structural Components

Fireproofing for exposed structural components, except where otherwise specified or indicated, shall have a minimum applied dry density of 22 pounds per cubic foot and a cohesion/adhesion strength of 300 pounds per square foot.

2.1.1.3 Mechanical Rooms and Storage Areas

Fireproofing for structural components located in mechanical rooms and storage areas shall have a minimum applied dry density of 40 pounds per cubic foot and a cohesion/adhesion strength of 400 pounds per square foot.

2.1.2 Deflection

Spray-applied fireproofing shall not crack, spall, or delaminate when tested in accordance with ASTM E 759.

2.1.3 Bond-Impact

Spray-applied fireproofing material shall not crack, spall or delaminate when tested in accordance with ASTM E 760.

2.1.4 Compressive Strength

The minimum compressive strength shall be 1000 psf when tested in accordance with ASTM E 761.

2.1.5 Corrosion

Spray-applied fireproofing material shall not contribute to corrosion of test panels when tested as specified in ASTM E 937.

2.2 SEALER

Sealer shall be the type approved by the manufacturer of the fireproofing material and shall be contrasting color to fireproofing.

2.3 WATER

Water used for material mixing and surface preparation shall be potable.

3 EXECUTION

3.1 SURFACE PREPARATION

Surfaces to be fireproofed shall be thoroughly cleaned of dirt, grease, oil, paint, loose rust, rolling lubricant, mill scale or other contaminants that will interfere with the proper bonding of the sprayed fireproofing to the substrate. Overhead areas to be fireproofed shall be cleared of all obstructions interfering with the uniform application of the spray-applied fireproofing. Hardware such as support sleeves, inserts, clips, hanger attachment devices and the like shall be installed prior to the application of the fireproofing. Condition of the surfaces shall be acceptable to the manufacturer prior to application of spray-applied fireproofing. Applications listed for use on primed surfaces shall be coordinated with the manufacturer and detailed in submittal item SD-01 Data.

3.2 PROTECTION

Surfaces not to receive spray-applied fireproofing shall be covered to prevent contamination by splatter, rebound and overspray. Exterior openings in areas to receive spray-applied fireproofing shall be covered prior to and during application of fireproofing with tarpaulins or other approved material. Surfaces not to receive fireproofing shall be cleaned of fireproofing and sealer.

3.3 MIXING

Fireproofing material shall be mixed in accordance with the manufacturer's recommendations.

3.4 APPLICATION

3.4.1 Sequence

Prior to application of fireproofing on each floor, the manufacturer shall inspect and approve application equipment, water supply and pressure, and the application procedures. Fireproofing shall be applied to underside of steel roof deck or steel floor assemblies only after respective roof or floor construction is complete. Fireproofing material shall be applied prior to the installation of ductwork, piping and conduits which would interfere with uniform application of the fireproofing. No roof traffic shall be allowed during application and curing period.

3.4.2 Application Technique

Water pressure and volume shall be maintained to manufacturer's recommendations throughout the fireproofing application. Fireproofing material shall be applied to the thickness established for the specified

fire resistance rating, in accordance with the procedure recommended by the manufacturer, and to a uniform density and texture. Fireproofing material shall not be tamped to achieve the desired density. Sealer shall be applied to all fireproofing.

3.5 FIELD TESTS

The applied fireproofing shall be tested in approved locations for density, and cohesion/adhesion force as specified, and for thickness in accordance with ASTM E 605, by an approved independent testing laboratory. Two sets of tests shall be conducted on each floor or 10,000-square-foot area, whichever is less, at the approved locations. Any area showing less than minimum requirements shall be rejected and corrected. Proposed corrective measures, in writing, shall be approved before starting the corrective action. Corrected work shall be retested.

3.5.1 Thickness, Density, Cohesion/Adhesion

Each structural component type shall be tested at floor and roof decks, beams, columns, joists, and trusses. Minimum average thickness shall be as required by UL-05. Density and cohesion/adhesion shall be as specified.

3.5.2 Repair

Additional fireproofing material may be added to provide proper thickness. Rejected areas of fireproofing shall be corrected to meet specified requirements by adding fireproofing material to provide the proper thickness, or by removing defects and respraying with new fireproofing material. Repairs shall use same type of fireproofing material as originally applied. Repaired areas shall be retested and reinspected. Fireproofing material shall be applied to voids or damaged areas by hand-trowel, or by respraying.

3.5.3 Manufacturer's Inspection

The manufacturer shall inspect the fireproofing work after the work is completed on each floor or area, including testing, repair and clean-up, and shall certify that the work complies with the manufacturer's criteria and recommendations. Before the sprayed material is covered, and after all of the fireproofing work is completed, including repair, testing, and clean-up; and after mechanical, electrical and other work in contact with fireproofing material has been completed, the manufacturer shall re-inspect the work and certify that the entire project complies with the manufacturer's criteria and recommendations.

END OF SECTION

SECTION 07270

FIRESTOPPING

1 GENERAL

1.1 REFERENCES

The publications listed below form a part of this specification to the extent referenced. The publications are referred to in the text by basic designation only.

AMERICAN SOCIETY FOR TESTING AND MATERIALS (ASTM)

ASTM E 84	(1995a) Surface Burning Characteristics of Building Materials
ASTM E 814	(1994b) Fire Tests of Through-Penetration Firestops

UNDERWRITERS LABORATORIES (UL)

UL-05	(1995; Supple) Fire Resistance Directory
UL 723	(1993; Rev Apr 1994) Test for Surface Burning Characteristics of Building Materials
UL 1479	(1994) Fire Tests of Through-Penetration Fire Stops

1.2 SUBMITTALS

Government approval is required for submittals with a "GA" designation; submittals having an "FIO" designation are for information only. The following shall be submitted in accordance with Section 01330 SUBMITTAL PROCEDURES:

SD-04 Drawings

Firestopping Materials; GA.

Detail drawings including manufacturer's descriptive data, typical details, installation instructions and the fire-test data and/or report as appropriate for the fire resistance rated construction and location. Submittal shall indicate the firestopping material to be provided for each type of application. When more than 5 penetrations are to receive firestopping, drawings shall indicate location and type of application.

SD-13 Certificates

Firestopping Materials; FIO.

Certificates attesting that firestopping material complies with the specified requirements. The label or listing of the Underwriters Laboratories will be acceptable evidence. In lieu of the label or listing,

a written certificate may be submitted from an approved, nationally recognized testing agency equipped to perform such services, stating that the items have been tested and conform to the specified requirements and testing methods.

Installer Qualifications; FIO.

Manufacturer's certification stating that each installer is qualified and trained to install the specified firestopping material.

Inspection; GA.

Manufacturer's representative certification stating that firestopping work has been inspected and found to be applied according to the manufacturer's recommendations and the specified requirements.

1.3 GENERAL REQUIREMENTS

Firestopping shall consist of furnishing and installing a material or a combination of materials to form an effective barrier against the spread of flame, smoke and gases, and maintain the integrity of fire resistance rated walls, partitions, floors, and ceiling-floor assemblies, including through-penetrations and construction joints. Through-penetrations include the annular space around pipes, tubes, conduit, wires, cables and vents. Construction joints include those used to accommodate expansion, contraction, wind, or seismic movement; firestopping material shall not interfere with the required movement of the joint.

1.4 STORAGE AND DELIVERY

Materials shall be delivered in the original unopened packages or containers showing name of the manufacturer and the brand name. Materials shall be stored off the ground and shall be protected from damage and exposure to elements. Damaged or deteriorated materials shall be removed from the site.

1.5 INSTALLER QUALIFICATIONS

Installer of firestopping material shall be trained by the manufacturer or the manufacturer's representative, and shall have a minimum of 3 years experience in the installation of firestopping of the type specified.

2 PRODUCTS

2.1 FIRESTOPPING MATERIALS

Firestopping materials shall consist of commercially manufactured products complying with the following minimum requirements:

2.1.1 Fire Hazard Classification

Material shall have a flame spread of 25 or less, and a smoke developed rating of 50 or less, when tested in accordance with ASTM E 84 or UL 723. Material shall be an approved firestopping material as listed in UL-05.

2.1.2 Toxicity

Material shall be nontoxic to humans at all stages of application.

2.1.3 Fire Resistance Rating

Firestopping will not be required to have a greater fire resistance rating than that of the assembly in which it is being placed.

2.1.3.1 Through-Penetrations

Firestopping materials for through-penetrations, as described in paragraph GENERAL REQUIREMENTS, shall provide "F" and "T" fire resistance ratings in accordance with ASTM E 814 or UL 1479, except that T Ratings are not required for penetrations smaller than or equal to a 4-inch nominal pipe or 16 square inches in overall cross sectional area. Fire resistance ratings shall be the following:

a. Penetrations of Fire Resistance Rated Walls and Partitions: F Rating = 1 hour, T Rating = 1 hour.

b. Penetrations of Fire Resistance Rated Floors and Ceiling-Floor Assemblies; F Rating = 1 hour, T Rating = 1 hour.

2.1.3.2 Construction Joints and Gaps

Fire resistance ratings of construction joints, as described in paragraph GENERAL REQUIREMENTS, and gaps such as those between floor slabs or roof decks and curtain walls shall be the same as the construction in which they occur.

3 EXECUTION

3.1 PREPARATION

Areas to receive firestopping shall be free of dirt, grease, oil, or loose materials which may affect the fitting or fire resistance of the firestopping system.

3.2 INSTALLATION

Firestopping material shall completely fill void spaces regardless of geometric configuration, subject to tolerance established by the manufacturer. Firestopping for filling floor voids 4 inchesor more in any direction shall be capable of supporting the same load as the floor is designed to support or shall be protected by a permanent barrier to prevent loading or traffic in the firestopped area. Firestopping shall be installed in accordance with manufacturer's written instructions. Firestopping shall be provided in the following locations:

a. Penetrations of duct, conduit, tubing, cable and pipe through floors and through fire-resistance rated walls, partitions, and ceiling-floor assemblies.

b. Penetrations of vertical shafts such as pipe chases, elevator shafts, and utility chutes.

c. Gaps at the intersection of floor slabs and curtain walls, including inside of hollow curtain walls at the floor slab.

d. Gaps at perimeter of fire-resistance rated walls and partitions, such as between the top of the walls and the bottom of roof decks.

e. Construction joints in floors and fire rated walls and partitions.

f. Other locations where required to maintain fire resistance rating of the construction.

3.3 INSPECTION

Firestopped areas shall not be covered or enclosed until inspection is complete and approved. A manufacturer's representative shall inspect the applications initially to ensure adequate preparations (clean surfaces suitable for application, etc.) and periodically during the work to assure that the completed work has been accomplished according to the manufacturer's written instructions and the specified requirements.

END OF SECTION

SECTION 07412

NON-STRUCTURAL METAL ROOFING

1 GENERAL

1.1 REFERENCES

The publications listed below form a part of this specification to the extent referenced. The publications are referred to in the text by basic designation only.

AMERICAN SOCIETY FOR TESTING AND MATERIALS (ASTM)

ASTM A 463	(1996a) Steel Sheet, Aluminum-Coated, by the Hot-Dip Process
ASTM A 653	(1996) Steel Sheet, Zinc-Coated (Galvanized) or Zinc-Iron Alloy-Coated (Galvannealed) by the Hot-Dip Process
ASTM A 792	(1995) Steel Sheet, 55% Aluminum-Zinc Alloy-Coated by the Hot-Dip Process
ASTM B 117	(1994) Operating Salt Spray (Fog) Testing Apparatus
ASTM B 209	(1996) Aluminum and Aluminum-Alloy Sheet and Plate
ASTM C 518	(1991) Steady-State Heat Flux Measurements and Thermal Transmission Properties by Means of the Heat Flow Meter Apparatus
ASTM C 612	(1993) Mineral Fiber Block and Board Thermal Insulation
ASTM C 991	(1992) Flexible Glass Fiber Insulation for Pre-Engineered Metal Buildings
ASTM C 1289	(1995) Faced Rigid Cellular Polyisocyanurate Thermal Insulation Board
ASTM D 226	(1994) Asphalt-Saturated Organic Felt Used in Roofing and Waterproofing
ASTM D 522	(1993a) Mandrel Bend Test of Attached Organic Coatings
ASTM D 523	(1989; R 1994) Specular Gloss
ASTM D 714	(1987; R 1994) Evaluating Degree of Blistering of Paints

ASTM D 968	(1993) Abrasion Resistance of Organic Coatings by Falling Abrasive
ASTM D 1308	(1987; R 1993) Effect of Household Chemicals on Clear and Pigmented Organic Finishes
ASTM D 1654	(1992) Evaluation of Painted or Coated Specimens Subjected to Corrosive Environments
ASTM D 2244	(1993) Calculation of Color Differences from Instrumentally Measured Color Coordinates
ASTM D 2247	(1994) Testing Water Resistance of Coatings in 100% Relative Humidity
ASTM D 2794	(1993) Resistance of Organic Coatings to the Effects of Rapid Deformation (Impact)
ASTM D 3359	(1995) Measuring Adhesion by Tape Test
ASTM D 4214	(1989) Evaluating the Degree of Chalking of Exterior Paint Films
ASTM D 4397	(1996) Polyethylene Sheeting for Construction, Industrial, and Agricultural Applications
ASTM D 4587	(1991) Conducting Tests on Paint and Related Coatings and Materials Using a Fluorescent UV-Condensation Light- and Water- Exposure Apparatus
ASTM E 84	(1996a) Surface Burning Characteristics of Building Materials
ASTM E 96	(1995) Water Vapor Transmission of Materials

1.2 DESIGN LOADS

Wind uplift pressures are shown on the contract drawings.

1.3 PERFORMANCE REQUIREMENTS

The metal roofing system supplied shall be suitable for the roof slope, the underlayment, and uplift pressures shown on the contract drawings.

1.4 GENERAL REQUIREMENTS

The Contractor shall furnish a manufacturer's standard product which satisfies the specified design and additional requirements contained herein.

1.4.1 Manufacturer

The non-structural metal roofing system shall be the product of a manufacturer who has been in the practice of manufacturing metal roofs for a period of not less than 3 years and has been involved in at least five projects similar in size and complexity to this project.

1.4.2 Installer

The installer shall be certified by the metal roof manufacturer to have experience in installing at least three projects that are of comparable size, scope and complexity as this project for the particular roof system furnished. The installer may be either employed by the manufacturer or be an independent installer.

1.5 SUBMITTALS

Government approval is required for submittals with a "GA" designation; submittals having an "FIO" designation are for information only. The following shall be submitted in accordance with Section 01330 SUBMITTAL PROCEDURES:

SD-04 Drawings

Metal Roofing; GA.

Drawings consisting of catalog cuts, erection drawings, shop coating and finishing specifications, and other data as necessary to clearly describe materials, sizes, layouts, construction details, fasteners, and erection.

SD-13 Certificates

Roof Panels; FIO. Installation; FIO. Accessories; FIO.

Certificates attesting that the panels and accessories conform to the specified requirements. Certificate for the roof assembly shall certify that the assembly complies with the material and fabrication requirements specified and is suitable for the installation at the indicated design slope. Certified laboratory test reports showing that the sheets to be furnished are produced under a continuing quality control program and that at least five (5) representative samples of similar material to that which will be provided on this project have been previously tested and have met the quality standards specified for factory color finish.

Insulation; FIO.

Certificate attesting that the polyurethane or polyisocyanurate insulation furnished for the project contains recovered material, and showing an estimated percent of such recovered material.

Installer; FIO.

Certification of installer.

Warranties; FIO.

At the completion of the project, signed copies of the 5-year Warranty for Non-Structural Metal Roofing System, a sample copy of which is attached to this section, and the 20-year Manufacturer's Material Warranties.

SD-14 Samples

Accessories; GA.

One sample of each type of flashing, trim, fascia, closure, cap and similar items. Size shall be sufficient to show construction and configuration.

Roof Panels; GA.

One piece of each type and finish to be used, 9 inches long, full width.

Fasteners; FIO.

Two samples of each type to be used with statement regarding intended use. If so requested, random samples of screws, bolts, nuts, and washers as delivered to the jobsite shall be taken in the presence of the Contracting Officer and provided to the Contracting Officer for testing to establish compliance with specified requirements.

Gaskets and Insulating Compounds; FIO.

Two samples of each type to be used and descriptive data.

Sealant; FIO.

One sample, approximately 1 pound, and descriptive data.

1.6 DELIVERY AND STORAGE

Materials shall be delivered to the site in a dry and undamaged condition and stored out of contact with the ground. Materials shall be covered with weather tight coverings and kept dry. Material shall not be covered with plastic where such covering will allow sweating and condensation. Plastic may be used as tenting with air circulation allowed. Storage conditions shall provide good air circulation and protection from surface staining.

1.7 WARRANTIES

The Non-Structural Metal Roofing System shall be warranted as outlined below against water leaks, and deficient materials arising out of or caused by ordinary wear and tear by the elements at the site.

1.7.1 Contractor's Weathertightness Warranty

The Non-Structural Metal Roofing System shall be warranted by the Contractor for a period of 5 years against water leakage. The Non-Structural Metal Roofing System covered under this warranty shall include the entire roofing system including, but not limited to, the following: panel seams and joint, all accessories, components and trim; penetrations such as vents, curbs, and skylights; interior or exterior gutters and downspouts; eaves, ridge, hip, valley, rake, gable, wall, or other roof system flashings installed to provide a weathertight roof system; and items specified in other sections of these specifications that become part of the non-structural metal roofing system. All leaks shall be repaired as approved by the Contracting Officer. This warranty shall warrant and cover the entire cost of repair or replacement, including all material, labor, and related markups. The Contractor may supplement this warranty with written warranties from the installer and/or manufacturer, which shall be submitted along with Contractor's warranty; however, the Contractor is ultimately responsible for this warranty. The Contractor's written warranty shall be as outlined in

attached example WARRANTY FOR NON-STRUCTURAL METAL ROOFING SYSTEM, and shall start upon final acceptance of the facility or the date the Government takes possession, whichever is earlier. It is understood that the Contractor's Performance Bond shall remain effective throughout the 5 year Contractor's warranty period for the entire metal roof system as outlined above.

1.7.2 Manufacturer's Material Warranties

The Contractor shall furnish, in writing, the following manufacturer's material warranties which cover all Non-Structural Metal Roofing System components such as roof panels, flashing, accessories, and trim, fabricated from coil material:

a. A manufacturer's 20 year material warranty warranting that the aluminum, zinc-coated steel, aluminum-zinc alloy coated steel or aluminum-coated steel as specified herein will not rupture, fail structurally, or perforate under normal atmospheric conditions at the site. Liability under this warranty shall be limited exclusively to the cost of either repairing or replacing nonconforming, ruptured, perforated, or structurally failed coil material.

b. A manufacturer's 20 year exterior material finish warranty warranting that the factory color finish, under normal atmospheric conditions at the site, will not crack, peel, or delaminate; chalk in excess of a numerical rating of 8 when measured in accordance with ASTM D 4214; or fade or change colors in excess of 5 NBS units as measured in accordance with ASTM D 2244. Liability under this warranty is exclusively limited to refinishing or replacing the defective coated coil material.

2 PRODUCTS

2.1 ROOF PANELS

Roof panels shall match the dimensions of width and seam height of existing adjacent Squadron Operation Facility FY96 roof panels. Panels shall be factory formed steel or aluminum and shall have a factory color finish. Length of sheets shall be sufficient to cover the entire length of any unbroken roof slope for slope lengths that do not exceed 30 feet. Sheets longer than 30 feet may be furnished if approved by the Contracting Officer. Width of sheets shall provide nominal 18 inches of coverage in place. Design provisions shall be made for thermal expansion and contraction consistent with the type of system to be used. All sheets shall be either square-cut or miter-cut. The ridge cap shall not have exposed fasteners. Height of corrugations, ribs, or seams, at overlap of adjacent roof sheets shall be 2 inches. For interlocking designs, a continuous factory-installed hot-melt sealant shall be applied to the leading edge of the female seam leg. All sheets shall be either square-cut or miter-cut except that gable end wall sheets may be cut in the shop to correspond to the roof slope and may have a horizontal joint at the eave line.

2.1.1 Steel Panels

Zinc-coated steel conforming to ASTM A 653; aluminum-zinc alloy coated steel conforming to ASTM A 792, AZ 55 coating; or aluminum-coated steel conforming to ASTM A 463, Type 2, coating designation T2 65. Uncoated roof panels

shall be 0.024 inch thick minimum. Panels shall be within 95 percent of the nominal thickness.

2.1.2 Aluminum Panels

Alloy conforming to ASTM B 209, temper as required for the forming operation, minimum 0.032 inch thick.

2.2 #.1 SOFFIT PANELS

Panels shall be either steel or aluminum and shall have a factory color finish. Panels shall be minimum 24 GA thick and 8-inches wide. Vent panels shall be perforated along the full width of panel and placed every 24 inches.

2.3 ACCESSORIES

Accessories shall be compatible with the roofing furnished. Flashing, trim, metal closure strips, caps, and similar metal accessories shall be not less than the minimum thicknesses specified for roof panels. Exposed metal accessories shall be finished to match the panels furnished. Molded closure strips shall be bituminous-saturated fiber, closed-cell or solid-cell synthetic rubber or neoprene, or polyvinyl chloride premolded to match configuration of the panels and shall not absorb or retain water. Thermal spacer blocks and other thermal barriers at concealed clip fasteners shall be as recommended by the manufacturer.

2.4 FASTENERS

Fasteners for roof panels shall be zinc-coated steel, aluminum, or nylon capped steel, type and size as recommended by the manufacturer to meet the performance requirements. Fasteners for accessories shall be the manufacturer's standard. Washer material shall be compatible with the panels; and gasketed portion of fasteners or washers shall be neoprene or other equally durable elastomeric material approximately 1/8 inchthick. Fasteners for roof panels shall be concealed.

2.5 #.1 CONCEALED ANCHOR CLIPS

Concealed anchor clips shall be as recommended by the manufacturer for the roofing system furnished. Clip bases shall have factory punched or drilled holes for attachment. Clips used with panel width greater than 12 inches shall be made from multiple pieces with the allowance for the total thermal movement required to take place within the clip.

2.6 FACTORY COLOR FINISH

Panels shall have a factory applied polyvinylidene fluoride finish on the exposed side. The exterior finish shall consist of a baked-on topcoat with an appropriate prime coat. Color shall match the color indicated on the drawings and shall match the roof color of the existing adjacent Squadron Operation Facility FY96. The exterior coating shall be a nominal 2 mil thickness consisting of a topcoat of not less than 0.7 mil dry film thickness and the paint manufacturer's recommended primer of not less than 1.0 mil thickness. The exterior color finish shall meet the test requirements specified below.

2.6.1 Salt Spray Test

A sample of the sheets shall withstand a salt spray test for a minimum of 1000 hours in accordance with ASTM B 117, including the scribe requirement in the test. Immediately upon removal of the panel from the test, the coating shall receive a rating of 10, no blistering, as determined by ASTM D 714; and a rating of 10, no edge creep failure at scribe, as determined by ASTM D 1654.

2.6.2 Formability Test

When subjected to testing in accordance with ASTM D 522 Method B, 1/8 inch diameter mandrel, the coating film shall show no evidence of fracturing to the naked eye.

2.6.3 Accelerated Weathering, Chalking Resistance and Color Change

A sample of the sheets shall be tested in accordance with ASTM D 4587, test condition B for 2000 total hours. The coating shall withstand the weathering test without cracking, peeling, blistering, loss of adhesion of the protective coating, or corrosion of the base metal. Protective coating that can be readily removed from the base metal with tape in accordance with ASTM D 3359, Test Method B, shall be considered as an area indicating loss of adhesion. Following the accelerated weathering test, the coating shall have a chalk rating not less than No. 8 in accordance with ASTM D 4214 test procedures, and the color change shall not exceed 5 CIE or Hunter Lab color difference (delta E) units in accordance with ASTM D 2244. For sheets required to have a low gloss finish, the chalk rating shall be not less than No. 6 and the color difference shall be not greater than 7 units.

2.6.4 Humidity Test

When subjected to a humidity cabinet test in accordance with ASTM D 2247 for 1500 hours, a scored panel shall show no signs of blistering, cracking, creepage or corrosion.

2.6.5 Impact Resistance

Factory-painted sheet shall withstand direct and reverse impact in accordance with ASTM D 2794 0.500 inch diameter hemispherical head indenter, equal to 1.5 times the metal thickness in mils, expressed in inch-pounds, with no loss of adhesion.

2.6.6 Abrasion Resistance Test

When subjected to the falling sand test in accordance with ASTM D 968, Method A, the coating system shall withstand a minimum of 50 liters of sand before the appearance of the base metal. The term "appearance of base metal" refers to the metallic coating on steel or the aluminum base metal.

2.6.7 Specular Gloss

Finished roof surfaces for shall have a specular gloss value of 30 plus or minus 5 at 60 degrees when measured in accordance with ASTM D 523.

2.6.8 Pollution Resistance

Coating shall show no visual effects when covered spot tested in a 10 percent hydrochloric acid solution for 24 hours in accordance with ASTM D 1308.

2.7 UNDERLAYMENTS

2.7.1 Felt Underlayment

Felt underlayment shall be No. 30 felt in accordance with ASTM D 226, Type II.

2.7.2 Slip Sheet

Slip Sheet shall be 5 pounds per 100 sf rosin sized unsaturated building paper.

2.8 INSULATION

Thermal resistance of insulation shall be not less than the R-values shown on the contract drawings. R-values shall be determined at a mean temperature of 75 degrees F in accordance with ASTM C 518. Insulation shall be a standard product with the insulation manufacturer, factory marked or identified with insulation manufacturer's name or trademark and R-value. Identification shall be on individual pieces or individual packages. Insulation shall have a flame spread not in excess of 25 and a smoke developed rating not in excess of 50 when tested in accordance with ASTM E 84. The stated R-value of the insulation shall be certified by an independent Registered Professional Engineer if tests are conducted in the insulation manufacturer's laboratory. Insulation shall have a facing providing a permeability of 0.1 perm or less when tested in accordance with ASTM E 96. Facing shall be either of reinforced foil with a vinyl finish or unreinforced foil with a natural finish. Facings and finishes shall be factory applied.

2.8.1 Rigid Board Insulation for Use Above a Roof Deck

2.8.1.1 Polyurethane or Polyisocyanurate

Polyurethane or polyisocyanurate insulation shall conform to ASTM C 1289, Type I, Class 2 (having a minimum recovered material content of 9 percent by weight of core material in the polyisocyanurate portion). For impermeable faced polyisocyanurate (Ex: aluminum foil) the maximum design R-value per 1 inch of insulation used shall be 7.2.

2.8.1.2 Mineral Fiber

Insulation shall conform to ASTM C 612.

2.9 INSULATION RETAINERS

Insulation retainers shall be type, size, and design necessary to adequately hold the insulation and to provide a neat appearance. Metallic retaining members shall be nonferrous or have a nonferrous coating. Nonmetallic retaining members, including adhesives used in conjunction with mechanical

retainers or at insulation seams, shall have a fire resistance classification not less than that permitted for the insulation.

2.10 SEALANT

Sealant shall be an elastomeric type containing no oil or asphalt. Exposed sealant shall be colored to match the applicable building color and shall cure to a rubberlike consistency.

2.11 GASKETS AND INSULATING COMPOUNDS

Gaskets and insulating compounds shall be nonabsorptive and suitable for insulating contact points of incompatible materials. Insulating compounds shall be nonrunning after drying.

2.12 VAPOR RETARDER

2.12.1 Vapor Retarders Separate from Insulation

Vapor retarder material shall be polyethylene sheeting conforming to ASTM D 4397. A single ply of 10 mil polyethylene sheet; or, at the Contractor's option, a double ply of 6 milpolyethylene sheet shall be used. A fully compatible polyethylene tape which has equal or better water vapor control characteristics than the vapor retarder material shall be provided. A cloth industrial duct tape in a utility grade shall also be provided to use as needed to protect the vapor retarder from puncturing.

3 EXECUTION

3.1 INSTALLATION

Installation shall be in accordance with the manufacturer's erection instructions and drawings. Dissimilar materials which are not compatible when contacting each other shall be insulated by means of gaskets or insulating compounds. Improper or mislocated drill holes shall be plugged with an oversize screw fastener and gasketed washer; however, sheets with an excess of such holes or with such holes in critical locations shall not be used. Exposed surfaces and edges shall be kept clean and free from sealant, metal cuttings, hazardous burrs, and other foreign material. Stained, discolored, or damaged sheets shall be removed from the site.

3.1.1 Roofing

Side laps shall be laid away from the prevailing winds. Side and end lap distances, joint sealing, and fastening and spacing of fasteners shall be in accordance with manufacturer's standard practice. Spacing of exposed fasteners shall present an orderly appearance. Side laps and end laps of roof panels and joints at accessories shall be sealed. Fasteners shall be driven normal to the surface. Method of applying joint sealant shall conform to the manufacturer's recommendation to achieve a complete weathertight installation. Accessories shall be fastened into substrate, except as otherwise approved. Closure strips shall be provided as indicated and where necessary to provide weathertight construction.

3.1.2 Underlayment

Underlayment shall be installed directly over the substrate. If a roof panel rests directly on the underlayments, a slip sheet shall be installed as a top layer, beneath the metal roofing panels, to prevent adhesion. All underlayments shall be installed so that successive strips overlap the next lower strip in shingle fashion. Underlayments shall be installed in accordance with the manufacturer's written instructions. The underlayments shall ensure that any water that penetrates below the metal roofing panels will drain outside of the building envelope.

3.2 INSULATION INSTALLATION

Insulation shall be installed as indicated and in accordance with manufacturer's instructions. Insulation shall be continuous over entire roof surface. Where expansion joints, terminations, and other connections are made, the cavity shall be filled with batt insulation and vapor retarder providing equivalent R-Value and perm rating as remaining insulation.

3.3 PROTECTION OF VAPOR RETARDER FROM ROOF DECK

A cloth industrial duct tape shall be adhered over all the seams of metal roof decking, at any penetration edges, and at all surface areas exhibiting sharp burrs or similar protrusions. For other types of roof decking, cloth industrial duct tape shall be adhered over all irregularities which could potentially puncture polyethylene membrane.

3.4 VAPOR RETARDER INSTALLATION

3.4.1 Polyethylene Vapor Retarder

The polyethylene vapor retarder membrane shall be installed over the entire surface. A fully compatible polyethylene tape shall be used to seal the edges of the sheets to provide a vapor tight membrane. Sheet edges shall be lapped not less than 6 inches. Sufficient material shall be provided to avoid inducing stresses in the sheets due to stretching or binding. All tears or punctures that are visible in the finished surface at any time during the construction process shall be sealed with polyethylene tape.

FIVE (5) YEAR WARRANTY FOR NON-STRUCTURAL METAL ROOFING SYSTEM

PROJECT DESCRIPTION AND LOCATION (Include Bldg. No.):_____
CORPS OF ENGINEERS CONTRACT NUMBER:_____
SPECIFICATION SECTION NUMBER & DESCRIPTION:
07412 NON-STRUCTURAL METAL ROOFING SYSTEM
_____

CONTRACTOR:_____
ADDRESS:_____
POINT OF CONTACT:_____
TELEPHONE NUMBER:_____

OWNER:_____
ADDRESS:_____
POINT OF CONTACT:_____
TELEPHONE NUMBER:_____

CONSTRUCTION AGENT:_____
ADDRESS:_____
POINT OF CONTACT:_____
TELEPHONE NUMBER:_____

THE ABOVE FACILITY IS WARRANTED BY_____ FOR A PERIOD OF FIVE (5) YEARS AGAINST LEAKAGE. THE NON-STRUCTURAL METAL ROOFING SYSTEM COVERED UNDER THIS WARRANTY SHALL INCLUDE THE ENTIRE ROOFING SYSTEM INCLUDING THE METAL ROOF PANELS; ALL ACCESSORIES, COMPONENTS, AND TRIM; INCLUDING PENETRATIONS SUCH AS VENTS, CURBS, SKYLIGHTS; INTERIOR OR EXTERIOR GUTTERS AND DOWNSPOUTS; EAVES, RIDGE, HIP, VALLEY, RAKE, GABLE, WALL, OR OTHER ROOF SYSTEM FLASHINGS INSTALLED TO PROVIDE A WEATHERTIGHT ROOF SYSTEM; AND ITEMS SPECIFIED IN OTHER SECTIONS OF THE SPECIFICATIONS THAT ARE PART OF THE NON-STRUCTURAL METAL ROOFING SYSTEM. ALL LEAKS SHALL BE REPAIRED AS APPROVED BY THE CONTRACTING OFFICER. THIS WARRANTY SHALL COVER THE ENTIRE COST OF REPAIR OR REPLACEMENT, INCLUDING ALL

MATERIAL, LABOR, AND RELATED MARKUPS. THE ABOVE REFERENCED WARRANTY COMMENCED
ON THE DATE OF FINAL ACCEPTANCE ON _____ AND WILL REMAIN
IN EFFECT FOR STATED DURATION FROM THIS DATE

SIGNED, DATED, AND NOTARIZED (BY COMPANY PRESIDENT)

_____

(Company President) (Date)

(SEE REVERSE SIDE FOR SUPPLEMENTAL PROVISIONS AND EXCLUSIONS)

FIVE (5) YEAR WARRANTY FOR NON-STRUCTURAL METAL ROOFING SYSTEM
(continued)

THE CONTRACTOR MAY SUPPLEMENT THIS WARRANTY WITH WRITTEN WARRANTIES FROM THE INSTALLER AND/OR MANUFACTURER OF THE NON-STRUCTURAL METAL ROOFING SYSTEM, WHICH SHALL BE SUBMITTED ALONG WITH THE CONTRACTOR'S WARRANTY; HOWEVER, THE CONTRACTOR WILL BE ULTIMATELY RESPONSIBLE FOR THE WARRANTY AS OUTLINED IN THE SPECIFICATIONS AND AS INDICATED IN THIS WARRANTY EXAMPLE.

EXCLUSIONS FROM COVERAGE

1. NATURAL DISASTERS, ACTS OF GOD (LIGHTNING, FIRE, EXPLOSIONS, HURRICANES, TORNADOES, EARTHQUAKES, AND HAIL).

2. ACTS OF NEGLIGENCE OR ABUSE OR MISUSE BY GOVERNMENT OR OTHER PERSONNEL, INCLUDING ACCIDENTS, VANDALISM, CIVIL DISOBEDIENCE, WAR, OR DAMAGE CAUSED BY FALLING OBJECTS.

3. DAMAGE BY STRUCTURAL FAILURE, SETTLEMENT, MOVEMENT, DISTORTION, WARPAGE, OR DISPLACEMENT OF THE BUILDING STRUCTURE OR ALTERATIONS MADE TO THE BUILDING.

4. CORROSION CAUSED BY EXPOSURE TO MARINE (SALT WATER) ATMOSPHERE; CONSTANT SPRAY OF EITHER SALT OR FRESH WATER; CORROSIVE CHEMICALS, ASH OR FUMES GENERATED OR RELEASED INSIDE OR OUTSIDE THE BUILDING FROM CHEMICAL PLANTS, FOUNDRIES, PLATING WORKS, KILNS, FERTILIZER FACTORIES, PAPER PLANTS, AND THE LIKE.

5. FAILURE OF ANY PART OF THE NON-STRUCTURAL METAL ROOFING SYSTEM DUE TO ACTIONS BY THE OWNER TO INHIBIT FREE DRAINAGE FROM THE ROOF AND ALLOW PONDING WATER. CONTRACTOR'S DESIGN SHALL INSURE FREE DRAINAGE FROM THE ROOF AND NOT ALLOW PONDING WATER.

6. THIS WARRANTY APPLIES TO THE NON-STRUCTURAL METAL ROOFING SYSTEM. IT DOES NOT INCLUDE ANY CONSEQUENTIAL DAMAGE TO THE BUILDING INTERIOR OR CONTENTS WHICH IS COVERED BY THE WARRANTY OF CONSTRUCTION CLAUSE INCLUDED IN THIS CONTRACT.

7. THIS WARRANTY CANNOT BE TRANSFERRED TO ANOTHER OWNER WITHOUT WRITTEN CONSENT OF THE CONTRACTOR; AND THIS WARRANTY AND THE CONTRACT PROVISIONS WILL TAKE PRECEDENCE OVER ANY CONFLICTS WITH STATE STATUTES, UNLESS OTHERWISE APPROVED IN WRITING BY THE CONTRACTING OFFICER.

RECEIPT OF NOTICE, BY TELEPHONE OR IN WRITING, FROM THE OWNER OR CONTRACTING OFFICER ABOUT LEAKS SHALL BE RESPONDED TO WITHIN 48 HOURS OF RECEIPT OF NOTICE. EMERGENCY REPAIRS TO PREVENT FURTHER ROOF LEAKS SHALL BE INITIATED IMMEDIATELY AND A WRITTEN PLAN SHALL BE SUBMITTED FOR APPROVAL TO REPAIR OR REPLACE THIS NON-STRUCTURAL METAL ROOFING SYSTEM. ACTUAL WORK FOR PERMANENT REPAIRS OR REPLACEMENT SHALL BE STARTED WITHIN 30 DAYS AFTER RECEIPT OF NOTICE, AND

COMPLETED WITHIN A REASONABLE TIME FRAME. IF THE CONTRACTOR FAILS TO ADEQUATELY RESPOND TO THE WARRANTY PROVISIONS, AS STATED IN THE CONTRACT AND AS CONTAINED HEREIN, THE CONTRACTING OFFICER MAY HAVE THE NON-STRUCTURAL METAL ROOFING SYSTEM REPAIRED OR REPLACED BY OTHERS AND CHARGE THE COST TO THE CONTRACTOR.

A FRAMED COPY OF THIS WARRANTY SHALL BE POSTED IN THE MECHANICAL ROOM OR OTHER APPROVED LOCATION DURING THE ENTIRE WARRANTY PERIOD.

SECTION 07530

ELASTOMERIC ROOFING (EPDM)

1 GENERAL

1.1 REFERENCES

The publications listed below form a part of this specification to the extent referenced. The publications are referred to in the text by basic designation only.

AMERICAN SOCIETY FOR TESTING AND MATERIALS (ASTM)

ASTM C 29	(1991a) Unit Weight and Voids in Aggregate
ASTM D 448	(1986; R 1993) Sizes of Aggregate for Road and Bridge Construction
ASTM D 4637	(1987) Vulcanized Rubber Sheet Used in Single-Ply Roof Membrane
ASTM E 108	(1995) Fire Tests of Roof Coverings

FACTORY MUTUAL ENGINEERING AND RESEARCH (FM)

FM-01	(1996) Data Book for Roofing Contractors

SINGLE PLY ROOFING INSTITUTE (SPRI)

SPRI RP-4	(1988) Wind Designs

UNDERWRITERS LABORATORIES (UL)

UL 580	(1994; Rev thru Apr 1996) Tests for Uplift Resistance of Roof Assemblies
UL 790	(1995) Tests for Fire Resistance of Roof Covering Materials
UL 1256	(1993; Rev thru Apr 1996) Fire Test of Roof Deck Constructions

1.2 SUBMITTALS

Government approval is required for submittals with a "GA" designation; submittals having an "FIO" designation are for information only. The following shall be submitted in accordance with Section 01330 SUBMITTAL PROCEDURES:

SD-04 Drawings

Roofing System; GA.

Drawings showing size of sheets, position of sheets and splices, flashing details, fastening patterns where applicable for insulation and membrane sheets, and expansion joint details. Detail showing construction of water cutoffs to be used at membrane terminations at the end of a day's work to seal the roofing system from water intrusion.

SD-06 Instructions

Installation; GA.

Manufacturer's instructions for preparing and installing the membrane, flashings, seams, insulation, nailers and other accessories.

SD-08 Statements

Protection Plan; GA.

Protection plan showing areas to be protected, type of material used; a plan to protect the membrane from damage until completion of work by other trades, and a description of the method of repairing the roofing.

Inspection; GA.

The inspection procedure for substrate suitability including decks, curbs and insulation installation, prior to start of the work.

Inspection procedures during and after placement of the membrane, and after completion of work by other trades.

SD-13 Certificates

Materials; FIO.

Certificates of compliance attesting that the roofing system and materials meet specification requirements. The certificates shall list the components required for the specified fire and wind uplift resistance ratings.

1.3 GENERAL REQUIREMENTS

Elastomeric membrane roofing shall be fully adhered to the roof surfaces indicated. Roofing membrane sheet widths shall be consistent with membrane attachment methods and wind uplift requirements, and shall be as large as practical to minimize joints. Membrane shall be free of defects and foreign material. Flashing work shall be coordinated to permit continuous membrane installation operations. Applied insulation shall be weatherproofed by the membrane on the same day.

1.3.1 Delivery and Storage

Materials shall be delivered to the jobsite in the manufacturer's original, unopened packages, clearly marked with the manufacturer's name, brand name, and description of contents. Materials other than ballast shall be stored in clean, dry areas. Storage temperatures shall be as specified by the manufacturer. Materials other than ballast stored on the roof shall not exceed one day's supply and shall be distributed so as not to exceed the roof live load capacity. Ballast shall be stored uncovered, shall not be in contact with sod or earth, and shall not be stored on the roof.

1.3.2 Fire Resistance

The completed roof system shall have a ASTM E 108 (same test as UL 790 and FM-01, Appendix A) Class A classification, and meet fire test requirements of UL 1256 or FM-01, Appendix B for roof deck construction. Compliance of each component of the roofing system shall be evidenced by label or by written certification from the manufacturer.

1.3.3 Wind Uplift Requirements

Fully adhered attached roofing systems shall have a 90 UL 580 Class Rating or FM-01, Appendix C Windstorm Classification. Ratings from other independent laboratories may be substituted provided that the tests, requirements and ratings are documented to be equivalent, to the satisfaction of the Contracting Officer.

1.3.4 Warranty

Manufacturer's standard warranty for the roofing system shall be provided for not less than 20 years from acceptance of the work. Warranty shall state that manufacturer shall repair or replace defective materials if the roofing system leaks or allows the insulation beneath the membrane to become wet during the period of the warranty.

2 PRODUCTS

2.1 ADHESIVES

Adhesives, splicing cements, solvents, and sealants shall be as recommended by the membrane manufacturer.

2.2 FASTENERS

Fasteners for sheet-metal flashing shall be corrosion resistant steel annular-type nails or screws.

2.3 FLASHING

Flashing shall be of ultra-violet resistant materials as recommended by the membrane manufacturer. Prefabricated shaped flashings shall be used where possible. Sheared edges of metal flashings that contact the membrane shall be turned into a tight hem.

2.4 MEMBRANE

Membrane shall conform to ASTM D 4637, Type I EPDM, Grade 1; Class SR, 0.039 inch minimum thickness.

2.5 PREFABRICATED ACCESSORIES

Pipe seals and expansion joint covers shall be types and sizes recommended by the membrane manufacturer.

3 EXECUTION

3.1 ENVIRONMENTAL CONDITIONS

Membrane shall not be installed in high wind, inclement weather or when there is visible ice, frost or moisture on the deck, insulation or membrane. Membrane shall not be installed when air temperature is below the minimum specified by the membrane manufacturer.

3.2 PREPARATION

The substrate of any bay or section of the building shall be complete and suitable for insulation and membrane installation before roofing is begun. Insulation over which elastomeric roofing is installed shall conform to Section 07220 ROOF INSULATION. Surfaces against which membrane is applied shall be smooth, clean, and free from dirt, water, dew, oil, grease, sharp edges and construction debris; all joints over 1/4 inch wide shall be sealed; joints over 1/2 inch between insulation boards shall be filled with the same insulation. Wood nailers shall comply with Section 06100 ROUGH CARPENTRY.

3.3 INSTALLATION

Installation shall comply with the manufacturer's approved instructions, except as otherwise specified.

3.3.1 Flashing

Edges of membrane, projections through the roof and changes in roof planes shall be flashed. The flashing material shall be extended and sealed a minimum of 3 inches on each side of the fasteners which attach the membrane to nailers. The installed flashing shall be fastened at the top of the flashing a maximum of 12 inches on center under metal counter-flashing or cap.

3.3.2 Expansion Joints

Expansion joints shall be covered using prefabricated covers or elastomeric flashing in accordance with the manufacturer's recommendations.

3.3.3 Membrane

Membrane shall be applied in accordance with the manufacturer's instructions and the following requirements. Adjoining sheets comprising the membrane shall be adhered one to another using a butyl-based contact adhesive. Minimum width of the laps shall be 3 in. A primer shall be used before applying the contact adhesive if required by the membrane manufacturer. In applying the contact adhesive, the minimum thickness of the wet film shall be in accordance with the membrane manufacturer's recommendations. If manufacturer's recommendations are not available, the minimum thickness shall be 0.025 inch. A wet film thickness gage shall be used to determine wet film thickness. Direction of lap shall be such that water flows over lap. Membrane joints shall be free of wrinkles or fishmouths. Before application of the contact adhesive, the rubber surfaces to be mated shall be well cleaned. Joints shall be inspected over entire length after completion and defective areas shall be resealed and patched. Damaged areas

of membrane shall be removed and replaced with new materials, lapping underlying membrane by at least 3 inches on all sides.

3.3.4 Cutoffs

Cutoffs shall be installed if work day is ended or interrupted by bad weather before roof section is complete. The insulation line shall be straightened using loose-laid cut insulation and the membrane shall be sealed to the roof deck. Flutes in metal decking shall be sealed off along the cutoff edge. Membrane shall be pulled free or cut to expose the insulation when resuming work, and cut insulation sheets used for fill-in shall be removed as necessary to maintain the staggered pattern.

3.4 PROTECTION OF FINISHED ROOFING

The roofing membrane shall be protected from damage by other trades. After completion of work by other trades, the protection shall be removed and the roof shall be inspected. Any damage shall be repaired in accordance with the recommendations of the roofing manufacturer.

3.5 INSPECTION

The Contractor shall establish and maintain an inspection procedure to assure compliance of the installed elastomeric roofing with the contract requirements. The procedure shall include a checklist of points to be observed. Any work found not to be in compliance with the contract shall be promptly removed and replaced or corrected in an approved manner. Quality control shall include, but not be limited to, the following:

a. Observation of environmental conditions; number and skill level of roofing workers; start and end time of various tasks; condition of substrate.

b. Verification of compliance of materials before, during and after installation.

c. Inspection of insulation, nailers, flashings, penetrations and work requiring coordination with roofing.

d. Inspection of membrane placement, splicing, and attachment.

e. Inspection of placement of ballast and walkways.

f. Verification of ballast weight.

SECTION 07600

SHEET METALWORK, GENERAL

1 GENERAL

1.1 REFERENCES

The publications listed below form a part of this specification to the extent referenced. The publications are referred to in the text by basic designation only.

AMERICAN SOCIETY FOR TESTING AND MATERIALS (ASTM)

ASTM A 167	(1996) Stainless and Heat-Resisting Chromium-Nickel Steel Plate, Sheet, and Strip
ASTM B 32	(1995b) Solder Metal
ASTM B 209	(1995) Aluminum and Aluminum-Alloy Sheet and Plate
ASTM B 221	(1996) Aluminum and Aluminum-Alloy Extruded Bars, Rods, Wire, Shapes, and Tubes
ASTM B 370	(1992) Copper Sheet and Strip for Building Construction
ASTM D 226	(1994) Asphalt-Saturated Organic Felt Used in Roofing and Waterproofing
ASTM D 543	(1987) Resistance of Plastics to Chemical Reagents
ASTM D 822	(1995) Conducting Tests on Paint and Related Coatings and Materials Using Filtered Open-Flame Carbon-Arc Light and Water Exposure Apparatus
ASTM D 828	(1993) Tensile Breaking Strength of Paper and Paperboard
ASTM D 1784	(1992) Rigid Poly(Vinyl Chloride) (PVC) Compounds and Chlorinated Poly(Vinyl Chloride) (CPVC) Compounds
ASTM D 2822	(1991) Asphalt Roof Cement
ASTM D 3656	(1994) Insect Screening and Louver Cloth Woven from Vinyl-Coated Glass Yarns
ASTM D 4022	(1994) Coal Tar Roof Cement, Asbestos Containing
ASTM D 4586	(1993) Asphalt Roof Cement, Asbestos Free

ASTM E 96 (1995) Water Vapor Transmission of Materials

INSECT SCREENING WEAVERS ASSOCIATION (ISWA)

ISWA IWS 089 (1990) Recommended Standards and Specifications for Insect Wire Screening (Wire Fabric)

SHEET METAL AND AIR CONDITIONING CONTRACTORS NATIONAL ASSOCIATION (SMACNA)

SMACNA-02 (1993) Architectural Sheet Metal Manual

1.2 GENERAL REQUIREMENTS

Sheet metalwork shall be accomplished to form weathertight construction without waves, warps, buckles, fastening stresses or distortion, and shall allow for expansion and contraction.

1.2.1 Coordination

Cutting, fitting, drilling, and other operations in connection with sheet metal required to accommodate the work of other trades shall be performed by sheet metal mechanics. Installation of sheet metal items used in conjunction with roofing shall be coordinated with roofing work to permit continuous roofing operations. Sheet metalwork pertaining to heating, ventilating, and air conditioning is specified in Section 15895.

1.3 SUBMITTALS

Government approval is required for submittals with a "GA" designation; submittals having an "FIO" designation are for information only. The following shall be submitted in accordance with Section 01330 SUBMITTAL PROCEDURES:

SD-04 Drawings

Materials; GA.

Drawings of sheet metal items showing weights, gauges or thicknesses; types of materials; expansion-joint spacing; fabrication details; and installation procedures.

1.4 DELIVERY, STORAGE, AND HANDLING

Materials shall be adequately packaged and protected during shipment and shall be inspected for damage, dampness, and wet-storage stains upon delivery to the jobsite. Materials shall be clearly labeled as to type and manufacturer. Sheet metal items shall be carefully handled to avoid damage. Materials shall be stored in dry, ventilated areas until immediately before installation.

2 PRODUCTS

2.1 MATERIALS

Lead, lead-coated metal, and galvanized steel shall not be used. Any metal listed by SMACNA-02 for a particular item may be used, unless otherwise specified or indicated. Materials shall conform to the requirements specified below and to the thicknesses and configurations established in SMACNA-02. Different items need not be of the same metal, except that if copper is selected for any exposed item, all exposed items shall be copper.

2.1.1 Accessories

Accessories and other items essential to complete the sheet metal installation, though not specifically indicated or specified, shall be provided.

2.1.2 Aluminum Extrusions

ASTM B 221, Alloy 6063, Temper T5.

2.1.3 Bituminous Cement

Type I asphalt cement conforming to ASTM D 2822 or ASTM D 4586. For coal tar roofing; coal tar cement conforming to ASTM D 4022.

2.1.4 Sealant

Unless otherwise specified, sealant shall be an elastomeric weather resistant sealant as specified in Section 07920 JOINT SEALING.

2.1.5 Fasteners

Fasteners shall be compatible with the fastened material and shall be the type best suited for the application.

2.1.6 Felt

ASTM D 226, Type I.

2.1.7 Polyvinyl Chloride (PVC) Reglets

ASTM D 1784, Class 14333D, 0.075 inch minimum thickness.

2.1.8 Aluminum Alloy Sheet and Plate

ASTM B 209, anodized color bronze, form, alloy, and temper appropriate for use.

2.1.9 Copper

ASTM B 370, Temper H 00.

2.1.10 Stainless Steel

ASTM A 167, Type 302 or 304; fully annealed, dead soft temper.

2.1.11 Solder

ASTM B 32, 95-5 tin-antimony.

2.1.12 Through-Wall Flashing

a. Electro-sheet copper not less than 5 ounces,factory coated both sides with acid- and alkali-resistant bituminous compound not less than 6 ounces per square foot or factory covered both sides with asphalt-saturated cotton fabric, asphalt saturated glass-fiber fabric, or with 40 poundreinforced kraft paper bonded with asphalt.

b. Stainless steel, Type 304, not less than 0.003 inchthick, completely encased by and permanently bonded on both sides to 50 pound high strength bituminized crepe kraft paper, using hot asphalt, heat, and pressure.

c. Nonreinforced, waterproof, impermeable extruded elastomeric single ply sheeting not less than 30 mils thick.

d. Three ounce copper sheet, with 2 mils of dense, clear, polyethylene sheet bonded to each side of the copper.

e. Other through-wall flashing material may be used provided the following performance criteria are met.

(1) No cracking or flaking when bent 180 degrees over a 1/32 inch mandrel and rebent at the same point over the same mandrel in an opposite direction at 32 degrees F.

(2) Water vapor permeability not more than 2 perms when tested in accordance with ASTM E 96.

(3) Minimum breaking strength of 90 pounds per inch width in the weakest direction when tested in accordance with ASTM D 828.

(4) No visible deterioration after being subjected to a 400-hour direct weathering test in accordance with ASTM D 822.

(5) No shrinkage in length or width and less than 5 percent loss of breaking strength after a 10-day immersion, per ASTM D 543, in 5 percent (by weight) solutions, respectively, of sulfuric acid, hydrochloric acid, sodium hydroxide or saturated lime (calcium hydroxide).

2.1.13 Louver Screen

Type III aluminum alloy insect screening conforming to ISWA IWS 089 or Plastic-coated glass fiber mesh conforming to ASTM D 3656.

3 EXECUTION

3.1 GENERAL

Items such as gutters, downspouts and louvers shall be fabricated in conformance with SMACNA-02 and as indicated. Unless otherwise specified or indicated, exposed edges shall be folded back to form a 1/2 inch hem on the concealed side, and bottom edges of exposed vertical surfaces shall be angled to form drips. Bituminous cement shall not be placed in contact with roofing membranes other than built-up roofing.

3.2 EXPANSION JOINTS

Expansion joints shall be provided as specified in SMACNA-02. Expansion joints in continuous sheet metal shall be provided at 40 foot intervals for copper and stainless steel and at 32 foot intervals for aluminum, except extruded aluminum gravel stops and fasciae which shall have expansion joints at not more than 12 foot spacing. Joints shall be evenly spaced. An additional joint shall be provided where the distance between the last expansion joint and the end of the continuous run is more than half the required interval spacing.

3.3 PROTECTION OF ALUMINUM

Aluminum shall not be used where it will be in contact with copper or where it will contact water which flows over copper surfaces. Aluminum that will be in contact with wet or pressure-treated wood, mortar, concrete, masonry, or ferrous metals shall be protected against galvanic or corrosive action by one of the following methods:

3.3.1 Paint

Aluminum surfaces shall be solvent cleaned and given one coat of zinc-molybdate primer and one coat of aluminum paint as specified in Section 09900 PAINTING, GENERAL.

3.3.2 Nonabsorptive Tape or Gasket

Nonabsorptive tape or gasket shall be placed between the adjoining surfaces and cemented to the aluminum surface using a cement compatible with aluminum.

3.4 CONNECTIONS AND JOINTING

3.4.1 Soldering

Soldering shall apply to copper, and stainless steel items. Edges of sheet metal shall be pretinned before soldering is begun. Soldering shall be done slowly with well heated soldering irons so as to thoroughly heat the seams and completely sweat the solder through the full width of the seam. Edges of stainless steel to be pretinned shall be treated with soldering acid flux. Soldering shall follow immediately after application of the flux. Upon completion of soldering, the acid flux residue shall be thoroughly cleaned from the sheet metal with a water solution of washing soda and rinsed with clean water.

3.4.2 Riveting

Joints in aluminum sheets 0.040 inch or less in thickness shall be mechanically made.

3.4.3 Seaming

Flat-lock and soldered-lap seams shall finish not less than 1 inch wide. Unsoldered plain-lap seams shall lap not less than 3 inches unless otherwise specified. Flat seams shall be made in the direction of the flow.

3.5 CLEATS

A continuous cleat shall be provided where indicated or specified to secure loose edges of the sheet metalwork. Butt joints of cleats shall be spaced approximately 1/8 inch apart. The cleat shall be fastened to supporting wood construction with nails evenly spaced not over 12 inches on centers. Where the fastening is to be made to concrete or masonry, screws shall be used and shall be driven in expansion shields set in concrete or masonry.

3.6 GUTTERS AND DOWNSPOUTS

Gutters and downspouts shall be installed as indicated. Gutters shall be supported as indicated. Downspouts shall be rigidly attached to the building. Supports for downspouts shall be spaced according to manufacturer's recommendations.

3.7 FLASHINGS

Flashings shall be installed at locations indicated and as specified below. Sealing shall be according to the flashing manufacturer's recommendations. Flashings shall be installed at intersections of roof with vertical surfaces and at projections through roof, except that flashing for heating and plumbing, including piping, roof, and floor drains, and for electrical conduit projections through roof or walls are specified in other sections. Except as otherwise indicated, counter flashings shall be provided over base flashings. Perforations in flashings made by masonry anchors shall be covered up by an application of bituminous plastic cement at the perforation. Flashing shall be installed on top of joint reinforcement. Flashing shall be formed to direct water to the outside of the system.

3.7.1 Base Flashing

Metal base flashing shall be coordinated with roofing work. Metal base flashing shall be set in plastic bituminous cement over the roofing membrane, nailed to nailing strip, and secured in place on the roof side with nails spaced not more than 3 inches on centers.

3.7.2 Counter Flashings

Except as otherwise indicated, counter flashings shall be provided over base flashings. Counter flashing shall be installed as shown in SMACNA-02. Where bituminous base flashings are provided, the counter flashing shall extend down as close as practicable to the top of the cant strip. Counter flashing shall be factory formed to provide spring action against the base flashing.

3.7.3 Stepped Flashing

Stepped flashing shall be installed where sloping roofs surfaced with shingles abut vertical surfaces. Separate pieces of base flashing shall be placed in alternate shingle courses.

3.7.4 Through-Wall Flashing

Through-wall flashing includes sill, lintel, and spandrel flashing. The flashing shall be laid with a layer of mortar above and below the flashing so that the total thickness of the two layers of the mortar and flashing are

the same thickness as the regular mortar joints. Flashing shall not extend further into the masonry backup wall than the first mortar joint. Joints in flashing shall be lapped and sealed. Flashing shall be one piece for lintels and sills.

3.7.4.1 Lintel Flashing

Lintel flashing shall extend the full length of lintel. Flashing shall extend through the wall one masonry course above the lintels and shall be bent down over the vertical leg of the outer steel lintel angle not less than 2 inches, or shall be applied over top of masonry and precast concrete lintels. Bedjoints of lintels at control joints shall be underlaid with sheet metal bond breaker.

3.7.4.2 Sill Flashing

Sill flashing shall extend the full width of the sill and not less than 4 inches beyond ends of sill except at control joint where the flashing shall be terminated at the end of the sill.

3.8 INSTALLATION OF LOUVERS

Louvers shall be rigidly attached to the supporting construction. The installation shall be rain-tight. Louver screen shall be installed per manufacturer's written instructions.

3.9 REGLETS

Reglets shall be a factory fabricated product of proven design, complete with fittings and special shapes as required. Open-type reglets shall be filled with fiberboard or other suitable separator to prevent crushing of the slot during installation. Reglet plugs shall be spaced not over 12 inches on centers and reglet grooves shall be filled with sealant. Friction or slot-type reglets shall have metal flashings inserted the full depth of slot and shall be lightly punched every 12 inches to crimp the reglet and counter flashing together. Polyvinyl chloride reglets shall be sealed with the manufacturer's recommended sealant.

3.10 CONTRACTOR QUALITY CONTROL

The Contractor shall establish and maintain a quality control procedure for sheet metal used in conjunction with roofing to assure compliance of the installed sheet metalwork with the contract requirements. Any work found not to be in compliance with the contract shall be promptly removed and replaced or corrected in an approved manner. Quality control shall include, but not be limited to, the following:

a. Observation of environmental conditions; number and skill level of sheet metal workers; condition of substrate.

b. Verification of compliance of materials before, during, and after installation.

c. Inspection of sheet metalwork for proper size and thickness, fastening and joining, and proper installation.

The actual quality control observations and inspections shall be documented and a copy of the documentation furnished to the Contracting Officer at the end of each day.

SECTION 07920

JOINT SEALING

1 GENERAL

1.1 REFERENCES

The publications listed below form a part of this specification to the extent referenced. The publications are referred to in the text by basic designation only.

AMERICAN SOCIETY FOR TESTING AND MATERIALS (ASTM)

ASTM C 509	(1994) Elastomeric Cellular Preformed Gasket and Sealing Material
ASTM C 570	(1995) Oil- and Resin-Base Caulking Compound for Building Construction
ASTM C 734	(1993) Low-Temperature Flexibility of Latex Sealants After Artificial Weathering
ASTM C 834	(1995) Latex Sealants
ASTM C 920	(1994) Elastomeric Joint Sealants
ASTM C 1085	(1991) Butyl Rubber-Based Solvent-Release Sealants
ASTM C 1184	(1995) Structural Silicone-Sealants
ASTM D 217	(1988) Cone Penetration of Lubricating Grease
ASTM D 1056	(1991) Flexible Cellular Materials - Sponge or Expanded Rubber
ASTM D 1565	(1981; R 1990) Flexible Cellular Materials - Vinyl Chloride Polymers and Copolymers (Open-Cell Foam)
ASTM E 84	(1991a) Surface Burning Characteristics of Building Materials

1.2 SUBMITTALS

Government approval is required for submittals with a "GA" designation; submittals having an "FIO" designation are for information only. The following shall be submitted in accordance with Section 01330 SUBMITTAL PROCEDURES:

SD-01 Data

Backing; FIO

Bond-Breaker; FIO

Sealant; FIO

Manufacturer's descriptive data including storage requirements, shelf life, curing time, instructions for mixing and application, and primer data (if required). A copy of the Material Safety Data Sheet shall be provided for each solvent, primer or sealant material.

SD-13 Certificates

Sealant; FIO

Certificates of compliance stating that the materials conform to the specified requirements.

1.3 ENVIRONMENTAL REQUIREMENTS

The ambient temperature shall be within the limits of 40 to 90 degrees F when the sealants are applied.

1.4 DELIVERY AND STORAGE

Materials shall be delivered to the job in the manufacturer's original unopened containers. The container label or accompanying data sheet shall include the following information as applicable: manufacturer, name of material, formula or specification number, lot number, color, date of manufacture, mixing instructions, shelf life, and curing time at the standard conditions for laboratory tests. Materials shall be handled and stored to prevent inclusion of foreign materials. Materials shall be stored at temperatures between 40 and 90 degrees F unless otherwise specified by the manufacturer.

2 PRODUCTS

2.1 BACKING

Backing shall be 25 to 33 percent oversize for closed cell and 40 to 50 percent oversize for open cell material, unless otherwise indicated.

2.1.1 Rubber Backing

Cellular rubber sponge backing A shall be ASTM D 1056, Type 2, closed cell, Class A, Grade 1 round cross section.

2.1.2 PVC Backing

Polyvinyl chloride (PVC) backing B shall be ASTM D 1565, Grade VO 12 closed-cell foam, round cross section.

2.1.3 Synthetic Rubber Backing

Synthetic rubber backing C shall be ASTM C 509, Option I, Type I preformed rods or tubes.

2.2 #.1 NEOPRENE

Neoprene backing shall be ASTM D 1056, closed cell expanded neoprene cord Type 2, Class C, Grade 2C2.

2.3 BOND-BREAKER

Bond-breaker shall be as recommended by the sealant manufacturer to prevent adhesion of the sealant to backing or to bottom of the joint.

2.4 PRIMER

Primer shall be non-staining type as recommended by sealant manufacturer for the application.

2.5 CAULKING

Oil- and resin-based caulking, A shall be ASTM C 570, Type I, Use: Interior Caulking gun.

2.6 LATEX SEALANT

Latex Sealant, A shall be ASTM C 834.

2.7 ELASTOMERIC SEALANTS

Elastomeric sealants shall conform to ASTM C 920 and the following:

a. Polysulfide Sealant B, Polysulfide sealant, Type S, Grade NS, Class 25, use G, M, A.

b. Polyurethane Sealant C Polyurethane sealant, Grade NS, Class 25, use G, M, A.

c. Silicone Sealant D: Silicone sealant, Type S, Grade NS, Class 25 use G, M, A.

2.8 #.1 ACOUSTICAL SEALANT

Rubber or polymer-based acoustical sealant shall have a flame spread of 25 or less and a smoke developed rating of 50 or less when tested in accordance with ASTM E 84. Acoustical sealant shall have a consistency of 250 to 310 when tested in accordance with ASTM D 217, and shall remain flexible and adhesive after 500 hours of accelerated weathering as specified in ASTM C 734, and shall be non-staining.

2.9 PREFORMED SEALANT

Preformed sealant shall be polybutylene or isoprene-butylene based pressure sensitive weather resistant tape or bead sealant capable of sealing out moisture, air and dust when installed as recommended by the manufacturer. At temperatures from minus 30 to plus 160 degrees F, the sealant shall be non-bleeding and shall have no loss of adhesion.

2.9.1 Tape Sealant

Tape sealant, H: cross-section dimensions shall be as required.

2.9.2 Bead Sealant

Bead sealant, I: cross-section dimensions shall be as required.

2.9.3 Foam Strip

Foam strip J shall be polyurethane foam; cross-section dimensions shall be as required. Foam strip shall be capable of sealing out moisture, air, and dust when installed and compressed as recommended by the manufacturer. Service temperature shall be minus 40 to plus 275 degrees F. Untreated strips shall be furnished with adhesive to hold them in place. Adhesive shall not stain or bleed into adjacent finishes. Treated strips shall be saturated with butylene waterproofing or impregnated with asphalt.

2.10 SOLVENTS AND CLEANING AGENTS

Solvents, cleaning agents, and accessory materials shall be provided as recommended by the manufacturer.

3 EXECUTION

3.1 GENERAL

3.1.1 Surface Preparation

The surfaces of joints to be sealed shall be dry. Oil, grease, dirt, chalk, particles of mortar, dust, loose rust, loose mill scale, and other foreign substances shall be removed from surfaces of joints to be in contact with the sealant. Oil and grease shall be removed with solvent and surfaces shall be wiped dry with clean cloths. For surface types not listed below, the sealant manufacturer shall be contracted for specific recommendations.

3.1.2 Concrete and Masonry Surfaces

Where surfaces have been treated with curing compounds, oil, or other such materials, the materials shall be removed by sandblasting or wire brushing. Laitance, efflorescence and loose mortar shall be removed from the joint cavity.

3.1.3 Steel Surfaces

Steel surfaces to be in contact with sealant shall be sandblasted or, if sandblasting would not be practical or would damage adjacent finish work, the metal shall be scraped and wire brushed to remove loose mill scale. Protective coatings on steel surfaces shall be removed by sandblasting or by a solvent that leaves no residue.

3.1.4 Aluminum Surfaces

Aluminum surfaces to be in contact with sealants shall be cleaned of temporary protective coatings. When masking tape is used for a protective cover, the tape and any residual adhesive shall be removed just prior to applying the sealant. Solvents used to remove protective coating shall be as recommended by the manufacturer of the aluminum work and shall be non-staining.

3.1.5 Wood Surfaces

Wood surfaces to be in contact with sealants shall be free of splinters and sawdust or other loose particles.

3.2 APPLICATION

3.2.1 Masking Tape

Masking tape shall be placed on the finish surface on one or both sides of a joint cavity to protect adjacent finish surfaces from primer or sealant smears. Masking tape shall be removed within 10 minutes after joint has been filled and tooled.

3.2.2 Backing

Backing shall be installed to provide the indicated sealant depth. The installation tool shall be shaped to avoid puncturing the backing.

3.2.3 Bond-Breaker

Bond-breaker shall be applied to fully cover the bottom of the joint without contaminating the sides where sealant adhesion is required.

3.2.4 Primer

Primer shall be used on concrete masonry units, wood, or other porous surfaces in accordance with instructions furnished with the sealant. Primer shall be applied to the joint surfaces to be sealed. Surfaces adjacent to joints shall not be primed.

3.2.5 Sealant

Sealant shall be used before expiration of shelf life. Multi-component sealants shall be mixed according to manufacturer's printed instructions. Sealant in guns shall be applied with a nozzle of proper size to fit the width of joint. Joints shall be sealed as detailed in the drawings. Sealant shall be forced into joints with sufficient pressure to expel air and fill the groove solidly. Sealant shall be installed to the indicated depth without displacing the backing. Unless otherwise indicated, specified, or recommended by the manufacturer, the installed sealant shall be tooled so that the surface is uniformly smooth and free of wrinkles and to assure full adhesion to the sides of the joint. Sealants shall be installed free of air pockets, foreign embedded matter, ridges and sags. Sealer shall be applied over the sealant when and as specified by the sealant manufacturer.

3.3 CLEANING

The surfaces adjoining the sealed joints shall be cleaned of smears and other soiling resulting from the sealant application as work progresses.

END OF SECTION

SECTION 08110

STEEL DOORS AND FRAMES

1 GENERAL

1.1 REFERENCES

The publications listed below form a part of this specification to the extent referenced. The publications are referred to in the text by basic designation only.

AMERICAN SOCIETY FOR TESTING AND MATERIALS (ASTM)

ASTM C 236	(1989; R 1993) Steady-State Thermal Performance of Building Assemblies by Means of a Guarded Hot Box
ASTM C 976	(1990) Thermal Performance of Building Assemblies by Means of a Calibrated Hot Box
ASTM D 2863	(1991) Measuring the Minimum Oxygen Concentration to Support Candle-Like Combustion of Plastics (Oxygen Index)
ASTM E 90	(1990) Laboratory Measurement of Airborne Sound Transmission Loss of Building Partitions
ASTM E 283	(1991) Determining the Rate of Air Leakage Through Exterior Windows, Curtain Walls, and Doors Under Specified Pressure Differences Across the Specimen

DOOR AND HARDWARE INSTITUTE (DHI)

DHI A115.1G	(1994) Installation Guide for Doors and Hardware

NATIONAL ASSOCIATION OF ARCHITECTURAL METAL MANUFACTURERS (NAAMM)

NAAMM HMMA 862	(1987) Hollow Metal Manual; Section: Guide Specifications for Commercial Security Hollow Metal Doors and Frames
NAAMM HMMA 865	(1995) Hollow Metal Manual; Section: Guide Specifications for Swinging Sound Control Hollow Metal Doors and Frames

NATIONAL FIRE PROTECTION ASSOCIATION (NFPA)

NFPA 80	(1995) Fire Doors and Windows
NFPA 80A	(1993) Protection of Buildings from Exterior Fire Exposures

NFPA 101	(1997) Safety to Life from Fire in Buildings and Structures
NFPA 252	(1995) Fire Tests of Door Assemblies

STEEL DOOR INSTITUTE (SDOI)

SDOI SDI-100	(1991) Standard Steel Doors and Frames
SDOI SDI-106	(1996) Standard Door Type Nomenclature
SDOI SDI-107	(1984) Hardware on Steel Doors (Reinforcement - Application)

1.2 SUBMITTALS

Government approval is required for submittals with a "GA" designation; submittals having an "FIO" designation are for information only. The following shall be submitted in accordance with Section 01330 SUBMITTAL PROCEDURES:

SD-04 Drawings

Steel Doors and Frames; GA.

Drawings using standard door type nomenclature in accordance with SDOI SDI-106 indicating the location of each door and frame, elevation of each model of door and frame, details of construction, method of assembling sections, location and extent of hardware reinforcement, hardware locations, type and location of anchors for frames, and thicknesses of metal. Drawings shall include catalog cuts or descriptive data for the doors, frames, and weatherstripping including air infiltration data and manufacturers printed instructions.

SD-09 Reports

Fire Rated Doors; GA.

A letter by a nationally recognized testing laboratory which identifies the product manufacturer, type, and model; certifying that the laboratory has tested a sample assembly in accordance with NFPA 252 and issued a current listing for same.

SD-13 Certificates

Fire Rated Doors; FIO. Thermal Insulated Doors; FIO.

a. Certification of Oversized Fire Doors: Certificates of compliance in accordance with the requirements of NFPA 252 for fire doors exceeding the sizes for which label service is available.

b. Certification of Thermal Insulating Rating: Certification or test report for thermal insulated doors shall show compliance with the specified requirements. The certification, or test report, shall list the parameters and the type of hardware and perimeter seals used to achieve the rating.

1.3 DELIVERY AND STORAGE

During shipment, welded unit type frames shall be strapped together in pairs with heads at opposite ends or shall be provided with temporary steel spreaders at the bottom of each frame; and knockdown type frames shall be securely strapped in bundles. Materials shall be delivered to the site in undamaged condition, and stored out of contact with the ground and under a weathertight covering permitting air circulation. Doors and assembled frames shall be stored in an upright position in accordance with DHI A115.1G. Abraded, scarred, or rusty areas shall be cleaned and touched up with matching finishes.

1.4 WARRANTY

Manufacturer's standard performance guarantees or warranties that extend beyond a 1 year period shall be provided.

2 PRODUCTS

2.1 DOORS AND FRAMES

Doors and frames shall be factory fabricated in accordance with SDOI SDI-100 and the additional requirements specified herein. Door grade shall be heavy duty (Grade II) unless otherwise indicated on the door and door frame schedules. Exterior doors and frames shall be designation G60 galvanized. Interior doors and frames at rooms Women 140 and Men 141 shall be designation G60 galvanized. Doors and frames shall be prepared to receive hardware conforming to the templates and information provided under Section 08700 BUILDERS' HARDWARE. Doors and frames shall be reinforced, drilled, and tapped to receive mortised hinges, locks, latches, and flush bolts as required. Doors and frames shall be reinforced for surface applied hardware. Frames shall be welded type. Door frames shall be furnished with a minimum of three jamb anchors and one floor anchor per jamb. Anchors shall be not less than 18 gauge steel or 7 gauge diameter wire. For wall conditions that do not allow the use of a floor anchor, an additional jamb anchor shall be provided. Rubber silencers shall be furnished for installation into factory predrilled holes in door frames; adhesively applied silencers are not acceptable. Where frames are installed in plaster or masonry walls, plaster guards shall be provided on door frames at hinges and strikes. Full glass doors shall conform to SDOI SDI-100, Model 3, and shall include provisions for glazing. Reinforcing of door assemblies for closers and other required hardware shall be in accordance with SDOI SDI-100and the conditions of the fire door assembly listing when applicable. Exterior doors shall have top edges closed flush and sealed against water penetration. Exterior frames shall be thermally broken. Exterior doors shall be thermally insulated.

2.2 FIRE RATED DOORS

Fire rated door assemblies shall bear the listing identification label of a nationally recognized testing laboratory qualified to perform tests of fire door assemblies in accordance with NFPA 252 and having a listing for the tested assemblies. The fire resistance rating shall be as shown. Doors exceeding the sizes for which listing label service is offered shall be in accordance with NFPA 252. Listing identification labels shall be constructed and permanently applied by a method which results in their destruction should they be removed.

2.3 THERMAL INSULATED DOORS

The interior of thermal insulated doors shall be completely filled with rigid plastic foam permanently bonded to each face panel. The thermal conductance (U-value) through the door shall not exceed 0.41 btu/hr times sq f times f when tested as an operational assembly in accordance with ASTM C 236 or ASTM C 976. Doors with cellular plastic cores shall have a minimum oxygen index rating of 22 percent when tested in accordance with ASTM D 2863.

2.4 WEATHERSTRIPPING

Unless otherwise specified in Section 08700 BUILDERS' HARDWARE, weatherstripping shall be as follows: Weatherstripping for head and jamb shall be manufacturer's standard elastomeric type of synthetic rubber, vinyl, or neoprene and shall be installed at the factory or on the jobsite in accordance with the door frame manufacturer's recommendations. Weatherstripping for bottom of doors shall be as shown. Air leakage rate of weatherstripping shall not exceed 0.20 cfm per linear foot of crack when tested in accordance with ASTM E 283 at standard test conditions.

2.5 LOUVERS

Where indicated, doors shall be provided with louver sections. Louvers shall be sightproof type inserted into the door. Pierced louvers shall not be used on exterior doors. Inserted louvers shall be stationary. Louvers shall be nonremovable from the outside of exterior doors or the unsecure side of interior doors. Insect screens shall be a removable type with 18 by 16 mesh aluminum or bronze cloth.

2.6 GLAZING

Glazing shall be as specified in Section 08810 GLASS AND GLAZING. Removable glazing beads shall be screw-on or snap-on type.

2.7 FACTORY FINISH

Doors and frames shall be phosphatized and primed with standard factory primer system.

3 EXECUTION

3.1 INSTALLATION

Installation shall be in accordance with DHI A115.1G. Preparation for surface applied hardware shall be in accordance with SDOI SDI-107. Rubber silencers shall be installed in door frames after finish painting has been completed; adhesively applied silencers are not acceptable. Weatherstripping shall be installed at exterior door openings to provide a weathertight installation. Installation and operational characteristics of fire doors shall be in accordance with NFPA 80, NFPA 80A and NFPA 101.

3.1.1 Thermal Insulated Doors

Hardware and perimeter seals shall be adjusted for proper operation. Doors shall be sealed weathertight after installation of hardware and shall be in accordance with Section 07920 JOINT SEALING.

3.2 FIELD PAINTED FINISH

Steel doors and frames shall be field painted in accordance with Section 09900 PAINTING, GENERAL. Weatherstrips shall be protected from paint. Finish shall be free of scratches or other blemishes. Color shall be as indicated.

END OF SECTION

SECTION 08120

ALUMINUM DOORS AND FRAMES

1 GENERAL

1.1 REFERENCES

The publications listed below form a part of this specification to the extent referenced. The publications are referred to in the text by basic designation only.

ALUMINUM ASSOCIATION (AA)

AA DAF-45	(1980; R 1993) Designation System for Aluminum Finishes

AMERICAN ARCHITECTURAL MANUFACTURERS ASSOCIATION (AAMA)

AAMA 605.2	(1992) Voluntary Specification for High Performance Organic Coatings on Architectural Aluminum Extrusions and Panels
AAMA 1503.1	(1988) Voluntary Test Method for Thermal Transmittance and Condensation Resistance of Windows, Doors and Glazed Wall Sections

AMERICAN SOCIETY FOR TESTING AND MATERIALS (ASTM)

ASTM B 209	(1996) Aluminum and Aluminum-Alloy Sheet and Plate
ASTM B 221	(1996) Aluminum and Aluminum-Alloy Extruded Bars, Rods, Wire, Shapes, and Tubes
ASTM E 283	(1991) Determining the Rate of Air Leakage Through Exterior Windows, Curtain Walls, and Doors Under Specified Pressure Differences Across the Specimen
ASTM E 330	(1990) Structural Performance of Exterior Windows, Curtain Walls, and Doors by Uniform Static Air Pressure Difference

1.2 SYSTEM DESCRIPTION

Swing-type aluminum doors and frames, of size and design shown on the drawings, shall be provided at the locations indicated. Doors shall be furnished complete with frames, subframes, adjoining sidelights, trim, and other accessories indicated and specified.

1.3 PERFORMANCE REQUIREMENTS

1.3.1 Vertical Rail Rotational Performance

Full-glazed doors, except doors with top and bottom rails fastened together with tensioned tie rods, shall pass the following test:

The test section shall consist of an assembly of the top corner of the door. The side-rail section shall be 24 inches long and the top-rail section shall be 12 inches long. The top-rail section of doors having tie rods extending between stiles shall have blocking at the section cut to provide anchorage for the tie rod. The top-rail section shall be anchored to the test bench so that the corner protrudes far enough to allow clearance for deflection of the side rail. A lever arm capable of supporting 190 pounds shall be attached to the side-rail section at a point 19 inches from the inside edge of the top-rail. Position of the lever arm shall be parallel to the top-rail section. A weight support pad shall be attached to the lever arm at a point 19 inches from the inner edge of the side rail. The test section shall withstand a load of 130 pounds on the lever arm before reaching the point of failure. Failure is defined as a joint separation of 1/16 inch during test loading or a vertical rail rotational displacement of 3-1/2 degrees during test loading.

1.3.2 Wind Load Performance

Doors shall be of sufficient strength to withstand a design wind load of 25 pounds per square foot of supported area with a deflection of not more than 1/175 times the length of the member. Doors shall be tested in accordance with ASTM E 330 at a pressure not less than 1.5 times the design load.

1.4 SUBMITTALS

Government approval is required for submittals with a "GA" designation; submittals having an "FIO" designation are for information only. The following shall be submitted in accordance with Section 01330 SUBMITTAL PROCEDURES:

SD-01 Data

Aluminum Doors and Frames; FIO.

Manufacturer's descriptive data and catalog cuts including air-infiltration data.

SD-04 Drawings

Aluminum Doors and Frames; GA.

A schedule showing the location of each door shall be included with the drawings. Drawings showing elevations of each door and frame type, details and method of anchorage, details of construction, location and installation of hardware, shape and thickness of materials, and details of joints and connections.

SD-06 Instructions

Installation; FIO. Cleaning; FIO.

Manufacturers installation instructions and cleaning instructions.

SD-09 Reports

Full-Glazed; FIO.

For full-glazed certified test reports stating that doors meet all test and specified requirements. Test shall be conducted by an independent testing laboratory within a period of 36 months preceding delivery of the doors to the site.

SD-14 Samples

Finishes; GA.

Samples of the color anodized coating, showing the extreme color range.

1.5 DELIVERY AND STORAGE

Materials delivered to the jobsite shall be inspected for damage, and shall be unloaded with a minimum of handling. Storage shall be in a dry location with adequate ventilation, free from dust, water, and other contaminants, and which permits easy access for inspecting and handling. Materials shall be neatly stored on the floor, properly stacked on nonabsorptive strips or wood platforms. Doors and frames shall not be covered with tarps, polyethylene film, or similar coverings.

1.6 WARRANTY

Manufacturer's standard performance guarantees or warranties that extend beyond a one-year period shall be provided.

2 PRODUCTS

2.1 ALUMINUM DOORS AND FRAMES

Extrusions shall comply with ASTM B 221, Alloy 6063-T5 except alloy used for anodized color coatings shall be required to produce the specified color. Aluminum sheets and strips shall comply with ASTM B 209, alloy and temper best suited for the purpose. Fasteners shall be hard aluminum or stainless steel.

2.1.1 Finishes

Finish shall be color anodized. Color anodized finish shall be AA-M10C22A42 in accordance with the requirements of AA DAF-45. Color shall be as indicated.

2.1.2 Welding and Fastening

Where possible, welds shall be located on unexposed surfaces. Welds required on exposed surfaces shall be smoothly dressed. Welding shall produce a uniform texture and color in the finished work, free of flux and spatter. Exposed screws or bolts will be permitted only at inconspicuous locations and shall have heads countersunk.

2.1.3 Anchors

Anchors shall be stainless steel or steel with a hot-dipped galvanized finish. Anchors of the sizes and shapes required shall be provided for securing aluminum frames to adjacent construction. Anchors shall be placed near top and bottom of each jamb and at intermediate points not more than 25 inches apart. Transom bars shall be anchored at ends, and mullions shall be anchored at head and sill. Vertical mullion reinforcement shall be of sufficient length to extend up to the overhead structural slab or framing and be securely attached thereto. The bottom of each frame shall be anchored to the rough floor construction with 3/32 inch thick stainless steel angle clips secured to the back of each jamb and to floor construction. Stainless steel bolts and expansion rivets shall be used for fastening clip anchors. Freestanding door frames shall be reinforced and securely anchored to floor construction.

2.1.4 Provisions For Hardware

Hardware for aluminum doors is specified in Section 08700 BUILDERS' HARDWARE. Doors and frames shall be cut, reinforced, drilled, and tapped at the factory to receive template hardware. Reinforcement shall be provided in the core of doors as required to receive locks, door closers, and other hardware. Doors to receive surface applied hardware shall be reinforced as required.

2.1.5 Provisions For Glazing

Glazing shall be as specified in Section 08810 GLASS AND GLAZING. Metal glazing beads, vinyl inserts, and glazing gaskets shall be provided for securing glass. Glass stops shall be tamperproof on exterior side.

2.1.6 Weatherstripping

Weatherstripping shall be continuous silicone-treated wool pile type, or a type recommended by the door manufacturer, and shall be provided on head and jamb of exterior doors. Weatherstripping for bottom of doors shall be as shown. Weatherstripping shall be easily replaced without special tools, and shall be adjustable at meeting stiles of pairs of doors. Air leakage rate of weatherstripping shall not exceed 0.5 cubic feet per minute per lineal foot of crack when tested in accordance with ASTM E 283 at standard test conditions.

2.2 FABRICATION OF ALUMINUM FRAMES

Frames shall be double-glazed and shall have a minimum condensation resistance factor of 46 in accordance with AAMA 1503.1. Frames shall be fabricated of extruded aluminum shapes to contours as shown on the drawings. Shapes shown are representations of design, function, and required profile. Dimensions shown are minimum. Shapes of equivalent design may be submitted, subject to approval of samples. Minimum metal wall thickness shall be 0.090 inch, except glazing beads, moldings, and trim shall be not less than 0.050 inch. Frames that are to receive glass shall have removable snap-on glass stops and glazing beads. Joints in frame members shall be milled to a hairline watertight fit, reinforced, and secured mechanically by steel clip arrangement or by screw spline attachment.

2.3 FABRICATION OF ALUMINUM DOORS

2.3.1 Sizes, Clearances, and Edge Treatment

Doors shall be not less than 1-3/4 inches thick. Clearances shall be 1/16 inch at hinge stiles, 1/8 inch at lock stiles and top rails, and 3/16 inchat floors and thresholds. Single-acting doors shall be beveled 1/8 inch at lock and meeting stile edges. Double-acting doors shall have rounded edges at hinge stile, lock stile, and meeting stile edges.

2.3.1.1 Full-Glazed Stile and Rail Doors

Doors shall have medium stiles and rails as shown, and shall be fabricated from extruded aluminum hollow seamless tubes or from a combination of open-shaped members interlocked or welded together. Doors shall be double-glazed and shall have a minimum condensation resistance factor of 46 in accordance with AAMA 1503.1. Top and bottom rail shall be fastened together by means of welding or by 3/8 inch diameter cadmium-plated tensioned steel tie rods. An adjustable mechanism shall be provided in the top rail of narrow stile doors to allow for minor clearance adjustments after installation. Extruded aluminum glazing beads shall be provided on interior side of doors. Extruded aluminum theft-proof snap-in glazing beads or fixed glazing beads shall be provided on exterior or security side of doors. Glazing beads shall have vinyl insert glazing gaskets, designed to receive glass of thickness required. Glass is specified in Section 08810 GLASS AND GLAZING.

3 EXECUTION

3.1 INSTALLATION OF DOORS, FRAMES, AND ACCESSORIES

3.1.1 Protection of Aluminum

Aluminum shall not be used where it will be in contact with copper or where it will contact water which flows over copper surfaces. Aluminum that will be in contact with wet or pressure-treated wood, mortar, concrete, masonry, or ferrous metals shall be protected against galvanic or corrosive action by one of the following methods.

3.1.1.1 Paint

Aluminum surfaces to be protected shall be solvent cleaned and given a coat of zinc-molybdate primer and one coat of aluminum paint.

3.1.1.2 Nonabsorptive Tape or Gasket

Nonabsorptive tape or gasket shall be placed between the adjoining surfaces and shall be cemented to the aluminum surface using a cement compatible with aluminum.

3.1.2 Installation

Frames and framing members shall be accurately set in position to receive doors, transoms, and adjoining sidelights. Frames shall be plumb, square, level, and in alignment, and securely anchored to adjacent construction. Metal-to-metal joints between framing members shall be sealed as specified in Section 07920 JOINT SEALING. Doors shall be accurately hung with proper clearances, and adjusted to operate properly. Protective coverings if

provided shall be removed and the doors and frames shall be thoroughly cleaned.

END OF SECTION

SECTION 08201

WOOD DOORS

1 GENERAL

1.1 REFERENCES

The publications listed below form a part of this specification to the extent referenced. The publications are referred to in the text by basic designation only.

AMERICAN HARDBOARD ASSOCIATION (AHA)

AHA 135.4	(1982; R 1988) Basic Hardboard

AMERICAN SOCIETY FOR TESTING AND MATERIALS (ASTM)

ASTM E 152	(1981a) Fire Tests of Door Assemblies
ASTM E 283	(1991) Determining the Rate of Air Leakage Through Exterior Windows, Curtain Walls, and Doors Under Specified Pressure Differences Across the Specimen

ARCHITECTURAL WOODWORK INSTITUTE (AWI)

AWI-02	(1994) Architectural Woodwork Quality Standards, Guide Specifications and Quality Certification Program

NATIONAL ELECTRICAL MANUFACTURERS ASSOCIATION (NEMA)

NEMA LD 3	(1991) High-Pressure Decorative Laminates

NATIONAL FIRE PROTECTION ASSOCIATION (NFPA)

NFPA 80	(1995) Fire Doors and Windows
NFPA 101	(1997) Safety to Life from Fire in Buildings and Structures
NFPA 252	(1995) Fire Tests of Door Assemblies

NATIONAL WOOD WINDOW & DOOR ASSOCIATION (NWWDA)

NWWDA I.S. 1-A	(1993) Architectural Wood Flush Doors
NWWDA I.S. 4	(1994) Water-Repellent Preservative Treatment for Millwork

1.2 GENERAL REQUIREMENTS

1.2.1 Standard Products

Doors shall be of the type, size, and design indicated on the drawings, and shall be the standard products of manufacturers regularly engaged in the manufacture of wood doors.

1.2.2 Marking

Each door shall bear a stamp, brand, or other identifying mark indicating quality and construction of the door. The identifying mark or a separate certification shall include identification of the standard on which construction of the door is based, identity of the manufacturing plant, identification of the standard under which preservative treatment, if used, was made, and identification of the doors having a Type I glue bond.

1.3 SUBMITTALS

Government approval is required for submittals with a "GA" designation; submittals having an "FIO" designation are for information only. The following shall be submitted in accordance with Section 01330 SUBMITTAL PROCEDURES:

SD-04 Drawings

Wood Doors and Frames; GA.

Drawings indicating the location of each door, elevation of each type of door, details of construction, marks to be used to identify the doors, and location and extent of hardware blocking. Drawings shall include catalog cuts or descriptive data for doors, weatherstripping, and thresholds to be used.

SD-13 Certificates

Fire Rated Doors; FIO. Adhesives; FIO

Certificates for oversize fire doors stating that the doors are identical in design, materials, and construction to a door that has been tested and meets the requirements for the class indicated. Certificate stating that adhesives used for proposed doors do not contain any formaldehyde.

SD-14 Samples

Factory Coated Natural Finish; GA
Factory Coated Paint Finish; GA.

Samples of factory applied natural finish and high pressure laminate finish.

1.4 STORAGE

Doors shall be stored in fully covered areas and protected from damage and from extremes in temperature and humidity. Doors shall be stored on supports to prevent warping or twisting, and to provide ventilation. Factory cartons or wrappers shall be kept intact until installation.

1.5 HARDWARE

Hardware, including weatherstripping and thresholds, is specified in Section 08700 BUILDERS' HARDWARE.

1.6 GLAZING

Glazing is specified in Section 08810 GLASS AND GLAZING.

1.7 WARRANTY

Manufacturer's standard performance guarantees or warranties that extend beyond a 1 year period shall be provided.

2 PRODUCTS

2.1 GENERAL FABRICATION REQUIREMENTS

2.1.1 Edge Sealing

Wood end-grain exposed at edges of doors shall be sealed prior to shipment.

2.1.2 Preservative Treatment

Exterior softwood doors shall be water-repellent preservative treated in accordance with NWWDA I.S. 4.

2.1.3 Adhesives

Adhesives shall be in accordance with NWWDA I.S. 1-A, requirements for Type I Bond Doors (waterproof) for exterior doors and requirements for Type II Bond Doors (water-repellent) for interior doors. Adhesive for doors to receive a transparent finish shall be nonstaining. Adhesives shall contain no formaldehydes.

2.1.4 Prefitting

Doors shall be furnished prefitted or unfitted at the option of the Contractor, except plastic laminate clad doors shall be furnished prefit in accordance with the standards under which they are produced.

2.2 FLUSH DOORS

Flush doors shall be solid core as shown and shall conform to NWWDA I.S. 1-A, except for the one year acclimazation requirement in paragraph T-2, which shall not apply. Composite type doors shall be furnished where required to meet fire rating. Wood doors shall be 5-ply or 7-ply construction with faces, stiles, and rails bonded to the cores.

2.2.1 Core Construction

2.2.1.1 Solid Cores

Where not otherwise required by fire rating, construction shall be particle board core with stiles and rails bonded to the core.

2.2.2 Face Panels

2.2.2.1 Natural Finished Wood Veneer Doors

Doors to receive natural finish shall be of Premium Grade, book matched with birch veneer in accordance with NWWDA I.S. 1-A. Vertical stile strips shall be selected to provide edges of the same species and/or color as the face veneer.

2.2.3 Natural Finished Doors

Doors to receive natural finish shall be Premium Grade in accordance with AWI-02.

2.3 FIRE RATED DOORS

Fire rated door assemblies shall bear the listing identification label of a nationally recognized testing laboratory qualified to perform tests of fire door assemblies in accordance with NFPA 252 and having a listing for the tested assemblies. The specific time interval rating on the labels shall be as shown. Door assemblies shall be in accordance with NFPA 80. Listing identification on labels shall be constructed and permanently applied by a method which results in their destruction should they be removed.

2.3.1 Hardware Blocking

Composite fire rated doors shall be provided with hardware reinforcement blocking, including lock blocks and top, bottom, and intermediate rail blocking. Lock blocks shall be not less than 5 inches by 18 inches. Rail blocks shall be not less than 5 inches wide by full core thickness. All reinforcement blocking shall be in compliance with the manufacturer's labeling requirements. Reinforcement blocking shall not be of mineral material similar to the core.

2.3.2 Stile Edges

Composite fire rated doors shall be provided with vertical stile edges that do not contain fire retardant salts. Vertical stiles shall be of the same species and/or color as the face veneer. Stiles shall be Special laminated materials type.

2.4 FINISHING

2.4.1 Field Finishing

Doors to receive field finishing, whether paint or natural finish, shall be factory primed or sealed and then finished in accordance with Section 09900 PAINTING, GENERAL.

2.4.2 Factory Coated Natural Finish

Doors indicated to receive factory coated natural finish be given a transparent finish conforming to AWI-02, Test 1500, Custom Grade, light stain, medium rubbed sheen, close grain effect. Finish shall be AWI factory finish system Number 3 or 4. Color of the natural finish shall be as indicated on the Room Finish and Color Schedule. Edges of unfitted doors shall be field finished after fitting to the frames.

3 EXECUTION

3.1 INSTALLATION OF DOORS

3.1.1 Installation of Doors

Doors shall be fit, hung, and trimmed as required. Door shall have a clearance of 1/8 inch at the sides and top and shall have a bottom clearance of 1/4 inch over thresholds and 1/2 inch at other locations unless otherwise shown. The lock edge or both edges of doors shall be beveled at the rate of 1/8 inchin 2 inches. Cuts made on the job shall be sealed immediately after cutting, using a clear varnish or sealer. Bottom of doors shall be undercut to allow clear door swing over carpeted areas. Vertical edges of doors which have not been rounded or beveled at the factory shall be eased when the doors are installed.

3.1.2 Installation Fire Doors

Installation, hardware, and operational characteristics shall conform to NFPA 80 and NFPA 101 and shall be in strict conformance with the manufacturer's printed instructions. Properly sized pilot holes shall be drilled for screws in door edges. Factory applied labels shall remain intact where installed. Labeled hinge stile edge and top edge of door shall not be trimmed. Lockstile edge and bottom edge may be trimmed only to the extent recommended by the door manufacturer.

END OF SECTIOJ

SECTION 08330

OVERHEAD ROLLING DOORS

1 GENERAL

1.1 REFERENCES

The publications listed below form a part of this specification to the extent referenced. The publications are referred to in the text by basic designation only.

AMERICAN SOCIETY FOR TESTING AND MATERIALS (ASTM)

ASTM A 653	(1996) Steel Sheet, Zinc-Coated (Galvanized) or Zinc-Iron Alloy-Coated (Galvannealed) by the Hot-Dip Process
ASTM E 84	(1996a) Surface Burning Characteristics of Building Materials
ASTM E 330	(1990) Structural Performance of Exterior Windows, Curtain Walls, and Doors by Uniform Static Air Pressure Difference

AMERICAN SOCIETY OF HEATING, REFRIGERATING, AND AIR-CONDITIONING ENGINEERS (ASHRAE)

ASHRAE-03	(1993; Errata) Handbook, Fundamentals I-P Edition

NATIONAL ELECTRICAL MANUFACTURERS ASSOCIATION (NEMA)

NEMA ICS 2	(1993) Industrial Control Devices, Controllers and Assemblies
NEMA ICS 6	(1993) Enclosures for Industrial Control and Systems
NEMA MG 1	(1993; Rev 1, Rev 2, Rev 3) Motors and Generators

NATIONAL FIRE PROTECTION ASSOCIATION (NFPA)

NFPA 70	(1993) National Electrical Code
NFPA 80	(1995) Fire Doors and Windows

1.2 DESCRIPTION

Overhead rolling doors shall be spring counterbalanced, rolling type, with interlocking slats, complete with guides, fastenings, hood, brackets, and operating mechanisms, and shall be designed for use on openings as indicated. Fire doors shall bear the Underwriters Laboratories, Warnock Hersey, Factory Mutual or other nationally recognized testing laboratory label for Class B rating, 1 hour minimum rating assembly. Each door shall be

provided with a permanent label showing the manufacturer's name and address and the model number of the door. Doors in excess of the labelled size shall be deemed oversize and shall be provided with a certificate signed by an official of the company, certifying that the door and operator have been designed to meet the specified requirements.

1.2.1 Wind Load Requirements

Doors and components shall be designed to withstand the minimum design wind load of 25 psf. Doors shall be constructed to sustain a superimposed load, both inward and outward, equal to 1-1/2 times the minimum design wind load. The door shall support the superimposed loads for a minimum period of 10 seconds without evidence of serious damage and shall be operable after conclusion of the tests. Test data showing compliance with design windload requirements for the door design tested in accordance with a uniform static load equal to 1-1/2 times the minimum design windload, shall be provided. The uniform static load test specimen shall be supported using guides, endlocks, and windlocks as required for project installation. Recovery shall be at least 3/4 of the maximum deflection within 24 hours after the test load is removed.

1.2.2 Operational Cycle Life

All portions of the door and door operating mechanism that are subject to movement, wear, or stress fatigue shall be designed to operate through a minimum of 50,000 cycles. One complete cycle of door operation will begin with the door in the closed position, move to the full open position and return to the closed position.

1.3 SUBMITTALS

Government approval is required for submittals with a "GA" designation; submittals having an "FIO" designation are for information only. The following shall be submitted in accordance with Section 01330 SUBMITTAL PROCEDURES:

SD-01 Data

Overhead Rolling Door Unit; GA.

Manufacturer's catalog data, test data, and summary of forces and loads on the walls/jambs.

SD-04 Drawings

Overhead Rolling Door Unit; GA.

Drawings showing the location of each door including schedules. Drawings shall include elevations of each door type, details and method of anchorage, details of construction, location and installation of hardware, shape and thickness of materials, details of joints and connections, and details of guides, power operators, controls, and other fittings.

SD-06 Instructions

Overhead Rolling Door Unit; FIO.

Manufacturer's preprinted installation instructions.

SD-09 Reports

Tests; FIO.

Written record of fire door drop test.

SD-13 Certificates

Fire Doors; FIO.

Certificates stating that the overhead rolling doors conform to requirements of this section. Certificates for oversize fire doors stating that the doors and hardware are manufactured in compliance with the requirements for doors of this type and class and have been tested and meet the requirements for the class indicated.

SD-14 Samples

Thermal Strip Curtain; GA

Sample of strip curtain.

SD-19 Operation and Maintenance Manuals

Overhead Rolling Door Unit; FIO.

Six complete copies of operating instructions outlining the step-by-step procedures required for motorized door and shutter operation. The instructions shall include the manufacturer's name, model number, service manual, parts list, and brief description of all equipment and their basic operating features. Six complete copies of maintenance instructions listing routine maintenance procedures, possible breakdowns and repairs, troubleshooting guides, and simplified diagrams for the equipment as installed. Also spare parts data for each different item of material and equipment specified. The data shall include a complete list of parts and supplies, source of supply, and a list of the high mortality maintenance parts.

1.4 DELIVERY AND STORAGE

Doors shall be delivered to the jobsite wrapped in a protective covering with the brands and names clearly marked thereon. Doors shall be stored in a dry location that is adequately ventilated and free from dirt and dust, water, and other contaminants, and in a manner that permits easy access for inspection and handling.

1.5 WARRANTY

Manufacturer's standard performance guarantees or warranties that extend beyond a 1-year period shall be provided.

2 PRODUCTS

2.1 OVERHEAD ROLLING DOORS

Doors shall be surface-mounted type with guides at jambs set back a sufficient distance to clear the opening. Exterior doors shall be mounted as indicated.

2.1.1 Curtains

The fire door curtains shall roll up on a barrel supported at the head of opening on brackets, and shall be balanced by helical springs. Steel slats for doors less than 15 feet wide shall be minimum bare metal thickness of 0.0269 inches (22 gauge). Slats shall be of the minimum bare metal decimal thickness required for the width indicated and the wind pressure specified above.

2.1.1.1 Non-Insulated Curtains

Curtains shall be formed of interlocking slats of shapes standard with the manufacturer. Slats for exterior doors shall be flat type.

2.1.1.2 Insulated Curtains

The slat system shall supply a minimum R-value of 5 when calculated in accordance with ASHRAE-03. Slats shall be of the flat type as standard with the manufacturer. Slats shall consist of a urethane core not less than 11/16 inch thick, completely enclosed within metal facings. Exterior face of slats shall be gauge as specified for curtains. Interior face shall be not lighter than 24 gauge. Insulation shall have a flame spread rating of not more than 25 and a smoke development factor of not more than 50 when tested in accordance with ASTM E 84.

2.1.2 Endlocks and Windlocks

The ends of each alternate slat for interior doors shall have malleable endlocks of manufacturer's stock design. Endlocks shall be provided in accordance with manufacturer's listing on fire doors when required by test results performed by the code listing agency. In addition to endlocks, exterior doors shall have the manufacturer's standard windlocks as required to withstand the wind load. Windlocks shall prevent the curtain from leaving guides because of deflection from specified wind pressure.

2.1.3 Bottom Bar

The curtain shall have a standard bottom bar consisting of two hot-dip galvanized steel angles for steel doors. A sensing edge shall be attached to the bottom bar of doors that are electric-power operated.

2.1.4 Guides

Guides shall be steel structural shapes or formed steel shapes, of a size and depth to provide proper clearance for operation and resistance under the design windload. Guides shall be attached to adjoining construction with fasteners recommended by the manufacturer. Spacing of fasteners shall be as required to meet the minimum design windload.

2.1.5 Barrel

The fire door barrel shall be steel pipe or commercial welded steel tubing of proper diameter for the size of curtain. Deflection shall not exceed 0.03 inch per foot of span. Ends of the barrel shall be closed with cast-iron or steel plugs, machined to fit the pipe.

2.1.6 Springs

Oil tempered helical steel counter-balance torsion springs shall be installed within the barrel and shall be capable of producing sufficient torque to assure easy operation of the door curtain. Access shall be provided for spring tension adjustment from outside of the bracket without removing the hood.

2.1.7 Brackets

Brackets shall be of steel plates to close the ends of the roller-shaft housing, and to provide mounting surfaces for the hood. An operation bracket hub and shaft plugs shall have sealed prelubricated ball bearings.

2.1.8 Hoods

Hoods shall be steel with minimum bare metal thickness of 0.0209 (24 gauge), formed to fit contour of the end brackets, and shall be reinforced with steel rods, rolled beads, or flanges at top and bottom edges. Multiple segment and single piece hoods shall be provided with support brackets of the manufacturer's standard design as required for adequate support.

2.1.9 Weatherstripping

Exterior doors shall be fully weatherstripped. A compressible and replaceable weather seal shall be attached to the bottom bar. Weather seal at door guides shall be continuous vinyl or neoprene, bulb or leaf type, or shall be nylon-brush type. A weather baffle shall be provided at the lintel or inside the hood. Weatherstripping shall be easily replaced without special tools.

2.1.10 Operation

Doors shall be operated by means of electric power with auxiliary chain hoist.

2.1.10.1 Electric Power Operator With Auxiliary Chain Hoist Operation

Electric power operators shall be heavy-duty industrial type. The unit shall operate the door through the operational cycle life specified. The electric power operator shall be complete with electric motor, auxiliary operation, necessary means of reduction, brake, mounting brackets, push button controls, limit switches, magnetic reversing starter, and all other accessories necessary to operate components specified in other paragraphs of this section. The operator shall be so designed that the motor may be removed without disturbing the limit-switches settings and without affecting the emergency chain operator. Doors shall be provided with an auxiliary operator for immediate emergency manual operation of the door in case of electrical failure. Auxiliary operation shall be by means of galvanized endless chain extending to within 3 feet of the floor. The emergency manual

operating mechanism shall be so arranged that it may be operated from the floor without affecting the settings of the limit switches. A mechanical device shall be included that will disconnect the motor from the drive operating mechanism when the auxiliary operator is used. Where control voltages differ from motor voltage, a control voltage transformer shall be provided in and as part of the electric power operator system. Control voltage shall not exceed 120 volts.

a. Motors: Drive motors shall conform to NEMA MG 1, shall be high-starting torque, reversible type, and shall be of sufficient horsepower and torque output to move the door in either direction from any position at a speed range of 6 to 8 inches per second without exceeding the rated capacity. Motors shall be suitable for operation on 115 volts, single-phase current and shall be suitable for across-the-line starting. Motors shall be designed to operate at full capacity over a supply voltage variation of plus or minus 10 percent of the motor voltage rating. Motors shall be provided with overload protection.

b. Controls: Control equipment shall conform to NEMA ICS 2. Enclosures shall conform to NEMA ICS 6, Type 12 (industrial use). Each control station shall be of the three position button type, marked "OPEN," "CLOSE," and "STOP." The "OPEN" and "STOP" controls shall be of the momentary contact type with seal-in contact. The "CLOSE" control shall be of the momentary contact type. When the door is in motion and the "STOP" control is pressed, the door shall stop instantly and remain in the stop position; from the stop position, the door shall be operable in either direction by the "OPEN" or "CLOSE" controls. Controls shall be of the full-guarded type to prevent accidental operation. Readily adjustable limit switches shall be provided to automatically stop the doors at their fully open and closed positions.

c. Sensing Edge Device: The bottom edge of electric power operated doors shall have an electric or pneumatic sensing edge that will immediately reverse the door movement upon contact with an obstruction and cause the door to return to its full open position. The sensing edge shall not substitute for a limit switch. Exterior doors shall be provided with a combination compressible weather seal and sensing edge.

d. Electrical Work: Conduit and wiring necessary for proper operation shall be provided under Section 16415 ELECTRICAL WORK, INTERIOR. Flexible connections between doors and fixed supports shall be made with extra flexible type SJO cable. The cable shall have a spring-loaded automatic take up reel or a coil cord equivalent device.

2.1.11 Locking

Locking for motor operated doors shall consist of self-locking gearing with chain lock for emergency hand chain.

2.1.12 Finish

Steel slats and hoods shall be hot-dip galvanized G60 in accordance with ASTM A 653, and shall be treated for paint adhesion and shall receive a factory baked on prime coat for field finishing. Surfaces other than slats, hood, and faying surfaces shall be cleaned and treated to assure maximum paint adherence and shall be given a factory dip or spray coat of rust

inhibitive metallic oxide or synthetic resin primer. Color shall be as indicated.

2.2 #.1 THERMAL STRIP CURTAIN

Thermal strip curtain to be composition of clear PVC, reinforced for low temperature to 10 degree F. Each strip to be 12 inches wide with minimum 50 percent overlap of strips. Strips to be minimum .120 inches thick with rounded edges. Strip curtain shall be sized so as to protect door opening. Strip curtain shall have mounting bracket with pre-drilled holes for wing-bolts. Provide at overhead rolling doors with steel framing as required to mount strip curtain at opening as indicated.

2.3 FIRE DOORS

Fire rated rolling doors shall be provided at locations shown on the drawings. Fire doors shall conform to the requirements specified herein and to NFPA 80 for the class indicated. Doors shall bear the label, or be provided with oversize certification of a recognized testing agency indicating the listed rating for the fire door. The construction details necessary for the listed rating shall take precedence over conflicting details shown or specified herein. Fire doors shall be complete with hardware, accessories, and automatic closing device. An automatic closing device shall operate upon activation of the building's fire alarm system.

3 EXECUTION

3.1 INSTALLATION

Doors shall be installed in accordance with approved detail drawings and manufacturer's instructions. Anchors and inserts for guides, brackets, [motors,] [switches,] hardware, and other accessories shall be accurately located. Upon completion, doors shall be free from warp, twist, or distortion. Doors shall be lubricated, properly adjusted, and demonstrated to operate freely. Fire doors shall be installed in conformance with the requirements of NFPA 80 and the manufacturer's instructions. Field painting shall be in accordance with Section 09900 PAINTING, GENERAL.

3.2 #.1 FIELD PAINTED FINISH

Steel doors and frames shall be painted in accordance with Section 09900 PAINTING, GENERAL. Weather stripping shall be protected from paint. Finish shall be free of scratches or other blemishes.

3.3 TESTS

The fire doors shall be drop tested in accordance with NFPA 80 to show proper operation and full automatic closure and shall be reset in accordance with the manufacturer's instructions. A written record of initial test shall be provided to the Contracting Officer.

3.4 #.1 STRIP CURTAIN INSTALLATION

Strip curtain to be installed with wing-bolts inside of frame. Install as indicated.

END OF SECTION

SECTION 08331

METAL COILING COUNTER DOORS

1 GENERAL

1.1 REFERENCES

The publications listed below form a part of this specification to the extent referenced. The publications are referred to in the text by basic designation only.

AMERICAN SOCIETY FOR TESTING AND MATERIALS (ASTM)

ASTM A 240	(1995a) Heat-Resisting Chromium and Chromium-Nickel Stainless Steel Plate, Sheet, and Strip for Pressure Vessels
ASTM A 653	(1995) Steel Sheet, Zinc-Coated (Galvanized) or Zinc-Iron Alloy-Coated (Galvannealed) by the Hot-Dip Process
ASTM B 209	(1995) Aluminum and Aluminum-Alloy Sheet and Plate
ASTM B 221	(1995a) Aluminum and Aluminum-Alloy Extruded Bars, Rods, Wire, Shapes, and Tubes

NATIONAL ASSOCIATION OF ARCHITECTURAL METAL MANUFACTURERS (NAAMM)

NAAMM AMP 501	(1988) Metal Finishes Manual for Architectural and Metal Products; Section: Finishes for Aluminum
NAAMM AMP 503	(1988) Metal Finishes Manual for Architectural and Metal Products; Section: Finishes for Stainless Steel

NATIONAL FIRE PROTECTION ASSOCIATION (NFPA)

NFPA 80	(1995) Fire Doors and Windows

1.2 GENERAL

Rolling counter doors shall be of the type, size, and design indicated on the drawings, and shall be the standard product of a manufacturer regularly engaged in the production of rolling counter doors. Fire-rated rolling counter doors shall be provided where indicated. Each door shall be provided with a permanent label showing the manufacturer's name and address and the model number of the door.

1.3 SUBMITTALS

Government approval is required for submittals with a "GA" designation; submittals having an "FIO" designation are for information only. The

following shall be submitted in accordance with Section 01330 SUBMITTAL PROCEDURES:

SD-01 Data

Coiling Counter Door Unit; FIO.

Manufacturer's descriptive data and catalog cuts.

SD-04 Drawings

Coiling Counter Door Unit; GA.

Drawings including elevations of each door type, details of anchorage, details of construction, location and installation of hardware, shape and thickness of materials, details of joints and connections, and details of guides and fittings. A schedule showing the location of each counter door shall be included with the drawings.

SD-06 Instructions

Coiling Counter Door Unit; FIO.

Manufacturer's preprinted installation instructions.

SD-19 Operation and Maintenance Manuals

Coiling Counter Door Unit; FIO.

Six complete copies of maintenance instructions listing routine maintenance procedures, possible breakdowns and repairs, troubleshooting guides, and simplified diagrams for the equipment as installed. Spare parts data for each different item of material and equipment specified not later than 2 months prior to the date of beneficial occupancy. The data shall include a complete list of parts and supplies, with current unit prices and source of supply, and a list of the parts recommended by the manufacturer to be replaced after 1 year and 3 years of service.

1.4 DELIVERY AND STORAGE

Coiling counter doors shall be delivered to the jobsite wrapped in a protective covering with the brands and names clearly marked thereon. Rolling counter doors shall be stored in a dry location that is adequately ventilated and free from dust, water, or other contaminants, and in a manner that permits easy access for inspecting and handling. Doors shall be handled carefully to prevent damage. Damaged items that cannot be restored to like-new condition shall be replaced.

2 PRODUCTS

2.1 BASIC COMPONENTS

2.1.1 Curtain

The curtain shall be fabricated of 22 gauge galvanized steel slats conforming to ASTM A 653, Coating Designation G60. Slats shall be approximately 1-1/4 to 1-1/2 inch wide with a depth of crown of 1/2 inch.

Alternate slats shall be fitted with end locks to maintain curtain alignment. Bottom of curtain shall be provided with angle or tubular bar reinforcement matching the curtain, and fitted with a resilient bottom seal.

2.1.2 Frame Jamb and Head

Frame jamb and head shall be of 300 series stainless steel with #4 finish.

2.1.3 Barrel

The curtain shall be coiled around a steel tube of sufficient thickness and diameter to prevent deflection exceeding 0.03 inch per foot. The barrel shall contain oil tempered torsion springs capable of counterbalancing the weight of the curtain. Springs shall be calculated to provide a minimum of 7,500 operating cycles (one complete cycle of door operation will begin with the door in the closed position, move to the full open position and return to the closed position).

2.1.4 Counterbalance Assembly

Spring counterbalance shall be helical torsion type designed to include an overload factor of 25 percent and shall be grease packed and mounted in an inner shaft rod with grease sealed ball bearing units at each end.

2.1.5 Brackets

Brackets shall be a minimum 1/8 inch thick steel plate with provisions for bolting to the wall or to the guides.

2.1.6 Hood

The hood shall be of 24 gauge galvanized steel conforming to ASTM A 653, Coating Designation G60.

2.1.7 Locks

The curtain shall be locked at one side of bottom bar by a chrome-plated cylinder lock keyed into the building keying system. Lock shall be on the room side of the counter door.

2.2 ROLLING COUNTER DOOR (NON-RATED)

Rolling counter doors shall conform to the requirements specified herein and shall be constructed of galvanized steel curtains, guides and hood components.

2.3 INTEGRAL FRAME ROLLING COUNTER DOOR NON-RATED

Integral frame rolling counter door shall be galvanized steel. Integral frame shall be stainless steel. Jambs shall be formed to create guides for the curtain. Head and jambs shall be 16 gaugethickness. Counter shall be 14 gauge thickness.

2.4 OPERATION

2.4.1 Manual Operation

The curtain shall be operated by means of manual push-up with lift handles or continuous full width lift bar.

2.5 FINISH

Exposed parts of the counter door, including the curtain, bottom rail, guides, and hood shall be of uniform finish and appearance. Stainless steel shall be given a No. 4 finish in accordance with the NAAMM AMP 503. Steel shall have galvanized coating and shall be given a prime coat of paint as standard with the manufacturer. Steel parts that are not exposed shall be given a shop coat of paint standard with the manufacturer.

3 EXECUTION

3.1 INSTALLATION

Doors shall be installed in accordance with approved detail drawings and manufacturer's instructions. Anchors and inserts for guides, brackets, hardware, and other accessories shall be accurately located. Upon completion, doors shall be free from warp, twist, or distortion. Doors shall be lubricated, properly adjusted, and demonstrated to operate freely. Fire-door installation shall be in conformance with NFPA 80 for the class indicated and the manufacturer's instructions.

3.2 FIELD FINISHING

Doors to receive field finishing shall be factory primed, as required, and then shall be finished in accordance with Section 09900 PAINTING, GENERAL. Color shall be as indicated.

END OF SECTION

SECTION 08353

OPERABLE PARTITIONS

1 GENERAL

1.1 REFERENCES

The publications listed below form a part of this specification to the extent referenced. The publications are referred to in the text by basic designation only.

AMERICAN SOCIETY FOR TESTING AND MATERIALS (ASTM)

ASTM E 84	(1991a) Surface Burning Characteristics of Building Materials
ASTM E 90	(1990) Laboratory Measurement of Airborne Sound Transmission Loss of Building Partitions
ASTM E 413	(1987) Rating Sound Insulation
ASTM F 793	(1993) Standard Classification of Wall Covering by Durability Characteristics

FEDERAL SPECIFICATIONS (FS)

FS CCC-W-408	(Rev C) Wall Covering, Vinyl-Coated

NATIONAL ELECTRICAL MANUFACTURERS ASSOCIATION (NEMA)

NEMA LD 3	(1991) High-Pressure Decorative Laminates

1.2 SUBMITTALS

Government approval is required for submittals with a "GA" designation; submittals having an "FIO" designation are for information only. The following shall be submitted in accordance with Section 01330 SUBMITTAL PROCEDURES:

SD-04 Drawings

Operable Partitions; GA.

Drawings shall consist of a complete list of equipment and materials, including manufacturer's descriptive and technical literature; performance charts and curves; catalog cuts; and installation instructions. Drawings shall also contain complete schematic diagrams and any other details required to demonstrate that the system has been coordinated and will properly function as a unit. Drawings shall show proposed layout and anchorage of equipment and appurtenances, and equipment relationship to other parts of the work including clearances for maintenance and operation. The manufacturer's standard color chart shall be submitted with the drawings. Color will be selected from the color chart.

SD-13 Certificates

Materials; FIO. Operable Partitions; FIO.

Certificate attesting that the materials meet the requirements specified and that partitions have specified acoustical and flame retardant properties, as determined by test.

SD-19 Operation and Maintenance Manuals

Operable Partitions; FIO.

Six complete copies of operating instructions outlining the procedures required for electrically operated partitions. The instructions shall include the manufacturer's name, model number, service manual, parts list, and brief description of all equipment and operating features. Data shall include a complete list of parts and supplies, with current unit prices and source of supply, and a list of the parts recommended by the manufacturer to be replaced after 1 and 3 year(s) of service.

Six complete copies of maintenance instructions explaining routine maintenance procedures including inspection, adjustments, lubrication, and cleaning. The instructions shall list possible breakdown, methods of repair, and a troubleshooting guide. The instructions shall include equipment layout and diagrams of the system as installed.

1.3 DELIVERY AND STORAGE

Materials shall be delivered to the job site in the manufacturer's original, unopened packages and shall be stored with protection from the weather, humidity and temperature variations, dirt and dust, or other contaminants.

1.4 #.1 WARRANTY

Manufacturer's standard performance guarantees or warranties that extend beyond a 1 year period shall be provided.

2 PRODUCTS

2.1 MATERIALS

Material and equipment shall be the standard products of a manufacturer regularly engaged in the manufacture of such products and shall essentially duplicate items that have been in satisfactory use for at least 2 years prior to bid opening. Equipment shall be supported by a service organization that is, in the opinion of the Contracting Officer, reasonably convenient to the site.

2.1.1 Vinyl Covering

Vinyl coated fabric shall conform to ASTM F 793, Category V, Type II.

2.1.2 Sweep Strips

Sweep strips shall be vinyl or other material which will not crack or craze with severe usage.

2.1.3 Track

Track shall be recessed and of extruded aluminum or enamel finish steel. Track shall be manufacturer's standard product designed for the weight of door or partition furnished. Track sections shall be provided in the maximum lengths practicable, not less than 6 feet long except for narrow doors and at ends of runs where short length is required. Suitable joint devices such as interlocking keys shall be provided at each joint to provide permanent alignment of track.

2.1.4 Metal Soffit

Metal soffit shall be provided when track is recessed. Soffit shall be of metal of adequate thickness to protect the ceiling from damage by door operation and shall be provided with the door manufacturer's standard neutral-color applied finish. Soffits may be integral elements of ceiling track.

2.2 OPERABLE PARTITIONS

Operable partitions shall consist of top hung ball bearing carriers which support paired modular panels. Panels shall be not more than 4 feet wide, except for end closure panels, and shall be full height to track. Panels shall have a protective edge which fully surrounds and protects the edges of the surface material. Panels shall be constructed of minimum 16 gauge thick steel frames with minimum 22 gauge thick face panels spot welded to the frame. Panel thickness and composition shall be designed to provide an STC rating of not less than 40 in accordance with ASTM E 90 and ASTM E 413. Doors shall have vinyl sweep top seals which compress against the bottom of the top track. Bottom seals shall be a vinyl sweep mechanical seal which will expand in place or panels which will be lowered by self-contained operating device. Panels shall lock in place to form a stable, rigid partition. Panels shall be surfaced with vinyl covering. Partition finish shall have a flame spread rating of not more than 25 in accordance with ASTM E 84.

3 EXECUTION

3.1 INSTALLATION

Installation shall be in accordance with the manufacturer's approved installation instructions.

END OF SECTION

SECTION 08520

ALUMINUM WINDOWS

1 GENERAL

1.1 REFERENCES

The publications listed below form a part of this specification to the extent referenced. The publications are referred to in the text by basic designation only.

ALUMINUM ASSOCIATION (AA)

AA DAF-45	(1980) Designation System for Aluminum Finishes

AMERICAN ARCHITECTURAL MANUFACTURERS ASSOCIATION (AAMA)

AAMA 101	(1993) Voluntary Specifications for Aluminum Prime Windows and Sliding Glass Doors
AAMA 603.8	(1992) Voluntary Performance Requirements and Test Procedures for Pigmented Organic Coatings on Extruded Aluminum
AAMA 605.2	(1992; Addenda Feb 1994) Voluntary Specification for High Performance Organic Coatings on Architectural Aluminum Extrusions and Panels
AAMA 1503.1	(1988) Voluntary Test Method for Thermal Transmittance and Condensation Resistance of Windows, Doors and Glazed Wall Sections

AMERICAN SOCIETY FOR TESTING AND MATERIALS (ASTM)

ASTM E 283	(1991) Determining the Rate of Air Leakage Through Exterior Windows, Curtain Walls, and Doors Under Specified Pressure Differences Across the Specimen
ASTM E 330	(1990) Structural Performance of Exterior Windows, Curtain Walls, and Doors by Uniform Static Air Pressure Difference
ASTM E 547	(1993) Water Penetration of Exterior Windows, Curtain Walls, and Doors by Cyclic Static Air Pressure Differential

AMERICAN SOCIETY OF MECHANICAL ENGINEERS (ASME)

ASME A39.1	(1991; A39.1a) Safety Requirements for Window Cleaning

FEDERAL SPECIFICATIONS (FS)

FS RR-W-365	(Rev A) Wire Fabric (Insect Screening)

NATIONAL FIRE PROTECTION ASSOCIATION (NFPA)

NFPA 101	(1994) Safety to Life from Fire in Buildings and Structures

SCREEN MANUFACTURERS ASSOCIATION (SMA)

SMA 1004	(1987) Aluminum Tubular Frame Screens for Windows

1.2 WINDOW PERFORMANCE

Aluminum windows shall be designed to meet the following performance requirements. Testing requirements shall be performed by an independent testing laboratory or agency.

1.2.1 Structural Performance

Structural test pressures on window units shall be for positive load (inward) and negative load (outward) in accordance with ASTM E 330. After testing, there shall be no glass breakage, permanent damage to fasteners, hardware parts, support arms or actuating mechanisms or any other damage which could cause window to be inoperable. There shall be no permanent deformation of any main frame, sash or ventilator member in excess of the requirements established by AAMA 101 for the window types and classification specified in this section.

1.2.2 Air Infiltration

Air infiltration shall not exceed the amount established by AAMA 101for each window type when tested in accordance with ASTM E 283.

1.2.3 Water Penetration

Water penetration shall not exceed the amount established by AAMA 101for each window type when tested in accordance with ASTM E 547.

1.2.4 Thermal Performance

Thermal transmittance for thermally broken aluminum windows with insulating glass shall not exceed R-Value Class R3.33 when tested in accordance with AAMA 1503.1.

1.3 SUBMITTALS

Government approval is required for submittals with a "GA" designation; submittals having an "FIO" designation are for information only. The following shall be submitted in accordance with Section 01330 SUBMITTAL PROCEDURES:

SD-01 Data

Aluminum Windows; GA.

Manufacturer's descriptive data and catalog cut sheets.

SD-04 Drawings

Aluminum Windows; GA.

Drawings indicating elevations of window, rough-opening dimensions for each type and size of window, full-size sections, thicknesses of metal, fastenings, methods of installation and anchorage, connections with other work, type of wall construction, size and spacing of anchors, method of glazing, types and locations of operating hardware, mullion details, weatherstripping details, [screen details including method of attachment,] [window cleaner anchor details], and window schedules showing locations of each window type.

SD-06 Instructions

Aluminum Windows; FIO.

Manufacturer's preprinted installation instructions and cleaning instructions.

SD-09 Reports

Aluminum Windows; FIO.

Reports for each type of aluminum window attesting that identical windows have been tested and meet all performance requirements established under paragraph WINDOW PERFORMANCE.

SD-13 Certificates

Aluminum Windows; FIO.

Certificates stating that the aluminum windows are AAMA certified conforming to requirements of this section. Labels or markings permanently affixed to the window will be accepted in lieu of certificates.

SD-14 Samples

Aluminum Windows; GA.

Manufacturer's standard color samples of the specified finishes.

1.4 QUALIFICATION

Window manufacturer shall specialize in designing and manufacturing the type of aluminum windows specified in this section, and shall have a minimum of 5 years of documented successful experience. Manufacturer shall have the facilities capable of meeting contract requirements, single-source responsibility and warranty.

1.5 DELIVERY AND STORAGE

Aluminum windows shall be delivered to project site and stored in accordance with manufacturer's recommendations. Damaged windows shall be replaced with new windows.

1.6 WARRANTY

Manufacturer's standard performance guarantees or warranties that extend beyond a one year period shall be provided.

2 PRODUCTS

2.1 ALUMINUM WINDOW TYPES

Aluminum windows shall match the profiles and sill, jamb, head, and mullion dimensions of the adjacent, existing Squadron Operations Facility FY96. Aluminum windows shall consist of complete units including sash, glass, frame, weatherstripping, and hardware. Windows shall conform to AAMA 101. Windows shall be double-glazed and shall have a minimum condensation resistance factor of 46 when tested in accordance with AAMA 1503.1. Windows shall be constructed to withstand the building's calculated seismic drift of 0.77 inch +/- total at top of steel of perimeter roof joist support beams and 0.38 inch +/- interstory drift.

2.1.1 Fixed Windows

Aluminum fixed windows shall conform to AAMA 101 HS-HC40 type, non-operable glazed frame, complete with provisions for reglazing in the field.

2.2 WEATHERSTRIPPING

Weatherstripping for ventilating sections shall be of type designed to meet water penetration and air infiltration requirements specified in this section in accordance with AAMA 101, and shall be manufactured of material compatible with aluminum and resistant to weather. Weatherstrips shall be factory-applied and easily replaced in the field. Neoprene or polyvinylchloride weatherstripping are not acceptable where exposed to direct sunlight.

2.3 ACCESSORIES

2.3.1 Fasteners

Fastening devices shall be window manufacturer's standard design made from aluminum, non-magnetic stainless steel, cadmium-plated steel, nickel/chrome-plated steel or magnetic stainless steel in compliance with AAMA 101. Self-tapping sheet metal screws will not be acceptable for material thicker than 1/16 inch.

2.3.2 Hardware

Hardware shall be as specified for each window type and shall be fabricated of aluminum, stainless steel, cadmium-plated steel, zinc-plated steel or nickel/chrome-plated steel of quality established by AAMA 101.

2.3.3 Window Anchors

Anchoring devices for installing windows shall be made of aluminum, cadmium-plated steel, stainless steel, or zinc-plated steel conforming to AAMA 101.

2.4 GLASS AND GLAZING

Aluminum windows shall be designed for inside glazing, field glazing, and for glass types scheduled on drawings and specified in Section 08810GLASS AND GLAZING. Units shall be complete with glass and glazing provisions to meet AAMA 101. Glazing material shall be compatible with aluminum, and shall not require painting.

2.5 FINISH

2.5.1 Anodized Aluminum Finish

Exposed surfaces of aluminum windows shall be finished with anodic coating conforming to AA DAF-45: Architectural Class I, AA-M10-C22-A44, color anodic coating, 0.7 mil or thicker. Finish shall be free of scratches and other blemishes.

2.5.2 Color

Color shall be as indicated.

3 EXECUTION

3.1 INSTALLATION

Aluminum windows shall be installed in accordance with approved shop drawings and manufacturer's published instructions. Aluminum surfaces in contact with masonry, concrete, wood and dissimilar metals other than stainless steel, zinc, cadmium or small areas of white bronze, shall be protected from direct contact using protective materials recommended by AAMA 101. The completed window installation shall be watertight in accordance with Section 07920 JOINT SEALING. Glass and glazing shall be installed in accordance with requirements of this section and Section 08810 GLASS AND GLAZING.

3.2 ADJUSTMENTS AND CLEANING

3.2.1 Hardware Adjustments

Final operating adjustments shall be made after glazing work is complete.

3.2.2 Cleaning

Aluminum window finish and glass shall be cleaned on exterior and interior sides in accordance with window manufacturer's recommendations. Alkaline or abrasive agents shall not be used. Precautions shall be taken to avoid scratching or marring window finish and glass surfaces.

END OF SECTION

SECTION 08700

BUILDERS' HARDWARE

1 GENERAL

1.1 REFERENCES

The publications listed below form a part of this specification to the extent referenced. The publications are referred to in the text by basic designation only.

AMERICAN SOCIETY FOR TESTING AND MATERIALS (ASTM)

ASTM E 283	(1991) Determining the Rate of Air Leakage Through Exterior Windows, Curtain Walls and Doors Under Specified Pressure Differences Across the Specimen
ASTM F 883	(1990) Padlocks

BUILDERS HARDWARE MANUFACTURERS ASSOCIATION (BHMA)

BHMA-01	(Effective thru Jun 1995) Directory of Certified Locks & Latches
BHMA-02	(Effective thru Jul 1995) Directory of Certified Door Closers
BHMA-03	(Effective thru Jul 1996) Directory of Certified Exit Devices
BHMA ANSI/BHMA A156.1	(1988) Butts and Hinges
BHMA ANSI/BHMA A156.2	(1989) Bored and Preassembled Locks and Latches
BHMA ANSI/BHMA A156.3	(1994) Exit Devices
BHMA ANSI/BHMA A156.4	(1992) Door Controls - Closers
BHMA ANSI/BHMA A156.5	(1992) Auxiliary Locks & Associated Products
BHMA ANSI/BHMA A156.6	(1994) Architectural Door Trim
BHMA ANSI/BHMA A156.7	(1988) Template Hinge Dimensions
BHMA ANSI/BHMA A156.8	(1994) Door Controls - Overhead Stops and Holders
BHMA ANSI/BHMA A156.13	(1994) Mortise Locks & Latches
BHMA ANSI/BHMA A156.15	(1995) Closer Holder Release Devices
BHMA ANSI/BHMA A156.16	(1989) Auxiliary Hardware

BHMA ANSI/BHMA A156.17	(1993) Self Closing Hinges & Pivots
BHMA ANSI/BHMA A156.18	(1993) Materials and Finishes
BHMA ANSI/BHMA A156.19	(1990) Power Assist and Low Energy Power Operated Doors
BHMA ANSI/BHMA A156.20	(1989) Strap and Tee Hinges and Hasps
BHMA ANSI/BHMA A156.21	(1989) Thresholds
BHMA ANSI/BHMA A156.23	(1992) Electromagnetic Locks
BHMA ANSI/BHMA A156.24	(1992) Delayed Egress Locks

DOOR AND HARDWARE INSTITUTE (DHI)

DHI-03	(1989) Keying Systems and Nomenclature
DHI-04	(1976) Recommended Locations for Builders' Hardware for Custom Steel Doors and Frames
DHI-05	(1990) Recommended Locations for Architectural Hardware for Standard Steel Doors and Frames
DHI-A115.IG	(1994) Installation Guide for Doors and Hardware
DHI A115-W	(Varies) Wood Door Hardware Standards (Incl All5-W1 thru A115-W9)

NATIONAL FIRE PROTECTION ASSOCIATION (NFPA)

NFPA 80	(1995) Fire Doors and Windows
NFPA 101	(1997) Safety to Life from Fire in Buildings and Structures
NFPA 105	(1993) Installation of Smoke-Control Door Assemblies

1.2 SUBMITTALS

Government approval is required for submittals with a "GA" designation; submittals having an "FIO" designation are for information only. The following shall be submitted in accordance with Section 01330 SUBMITTAL PROCEDURES:

SD-01 Data

Hardware and Accessories; GA.

Manufacturer's descriptive data, technical literature, catalog cuts, and installation instructions. Spare parts data for locksets, exit devices, closers, electro-magnetic closer holder release devices, after approval of the detail drawings, and not later than 3 month(s) prior to the date of

beneficial occupancy. The data shall include a complete list of parts and supplies, with current unit prices and source of supply.

SD-04 Drawings

Hardware Devices; GA.

Detail drawings for hardware devices for computerized keying systems, magnetic cards, keyless push button access control systems, and other electrical hardware devices showing complete wiring and schematic diagrams and other details required to demonstrate proper function of units.

SD-07 Schedules

Hardware Schedule; GA.

Hardware schedule listing all items to be furnished. The schedule shall include for each item: the quantities; manufacturer's name and catalog numbers; the ANSI number specified, sizes; detail information or catalog cuts; finishes; door and frame size and materials; location and hardware set identification cross-references to drawings; corresponding reference standard type number or function number from manufacturer's catalog if not covered by ANSI or BHMA; and list of abbreviations and template numbers.

Keying Schedule; GA.

Develop Keying Schedule in accordance with DHI-03. The Keying Schedule shall be developed after performance of the Keying Conference which will be scheduled for accomplishment at approximately 50% of construction completion. See paragraph 1.3 for the Keying Conference requirements.

SD-13 Certificates

Hardware and Accessories; GA.

The hardware manufacturer's certificates of compliance stating that the supplied material or hardware item meets specified requirements. Each certificate shall be signed by an official authorized to certify in behalf of the product manufacturer and shall identify quantity and date or dates of shipment or delivery to which the certificates apply. A statement that the proposed hardware items appear in BHMA-01, BHMA-02 and BHMA-03 directories of certified products may be submitted in lieu of certificates. Specific requirements to include confirmation that proposed lockset manufacturer will be compatible with existing base locking system as coordinated through the base lock shop. All newly installed hardware must be compatible with the Best locking system currently in place at McChord AFB, and must accept and Best 7 - pin interchangeable core.

1.3 PREDELIVERY CONFERENCE

Upon approval of the Hardware Schedule, a Keying Conference will be scheduled by the construction contractor and lockset manufacturer in coordination with the Construction Contract Inspector (CCI) and base lock shop. The following persons are required to be in attendance for determining final keying requirements: spokesperson(s) for the end user(s) of facility; building custodian; representative from lock supplier, representative from base lock shop, and the Army Corps of Engineers (COE)

Inspector. Location of the key control storage system, set-up and key identification labeling will also be determined.

1.4 DELIVERY, STORAGE, AND HANDLING

Hardware shall be delivered to the project site in the manufacturer's original packages. Each article of hardware shall be individually packaged in the manufacturer's standard commercial carton or container, and shall be properly marked or labeled to be readily identifiable with the approved hardware schedule. Each change key shall be tagged or otherwise identified with the door for which its cylinder is intended. Where double cylinder functions are used or where it is not obvious which is the key side of a door, appropriate instructions shall be included with the lock and on the hardware schedule. Manufacturer's printed installation instructions, fasteners, and special tools shall be included in each package. Permanent keying hardware (cores, keys, codes, etc.) will be delivered to the base lock shop via certified mail or hand carried.

1.5 SPECIAL TOOLS

Special tools, such as those supplied by the manufacturer, unique wrenches, and dogging keys, shall be provided as required to adjust hardware items.

1.6 WARRANTY

Manufacturer's standard performance guarantees or warranties that extend beyond a one year period shall be provided.

1.7 OPERATION AND MAINTENANCE MANUALS

Six complete copies of maintenance instructions listing routine maintenance procedures, possible breakdowns and repairs, and troubleshooting guides shall be provided. The instructions for electro-magnetic closer holder release devices shall include simplified diagrams as installed.

2 PRODUCTS

2.1 GENERAL HARDWARE REQUIREMENTS

Hardware shall conform to the requirements specified herein and the HARDWARE SETS listing at the end of this section. Hardware set numbers correspond to the set numbers shown on the drawings.

2.2 TEMPLATES

Requirements for hardware to be mounted on metal doors or metal frames shall be coordinated between hardware manufacturer and door or frame manufacturer by use of templates and other information to establish location, reinforcement required, size of holes, and similar details. Templates of hinges shall conform to BHMA ANSI/BHMA A156.7.

2.3 HINGES

Hinges shall conform to BHMA ANSI/BHMA A156.1. Hinges used on metal doors and frames shall also conform to BHMA ANSI/BHMA A156.7. Except as otherwise specified, hinge sizes shall conform to the hinge manufacturer's printed recommendations.

2.3.1 Hinges for Reverse Bevel Doors with Locks

Hinges for reverse bevel doors with locks shall have pins that are made nonremovable by means such as a set screw in the barrel, or safety stud, when the door is in the closed position.

2.3.2 Contractor's Option

Hinges with antifriction bearings may be furnished in lieu of ball bearing hinges, except where prohibited for fire doors by the requirements of NFPA 80.

2.4 LOCKS AND LATCHES

To the maximum extent possible, locksets, latchsets and deadlocks shall be the products of a single manufacturer. Strikes for wood frames and pairs of wood doors shall be furnished with wrought boxes.

2.4.1 Mortise Lock and Latchsets

Mortise lock, latchsets, and strikes shall be series 1000 and shall conform to BHMA ANSI/BHMA A156.13, operational Grade 1. Mortise type locks and latches for doors 1-3/4 inches thick and over shall have adjustable bevel fronts or otherwise conform to the shape of the door. Mortise locks shall have armored fronts.

2.5 #.1 AUXILIARY LOCKS AND ASSOCIATED PRODUCTS

Mortise dead locks shall conform to BHMA ANSI/BHMA A156.5. Bolt and latch retraction shall be dead bolt style. Strike boxes shall be furnished with dead bolt and latch strikes for Grade 1.

2.5.1 Lock Cylinders (Mortise, Rim and Bored)

Lock cylinders shall comply with BHMA ANSI/BHMA A156.5. Lock cylinder shall have not less than seven pins and integrate into the existing Base BEST lock system. All cylinders shall be provided with interchangeable cores. A grand master keying system shall be provided. An extension of the existing keying system shall be incorporated as provided by the base lock shop. The existing locks were manufactured by BEST and have interchangeable cores. Construction interchangeable cores shall be provided. Disassembly of knob or lockset shall not be required to remove core from lockset. All locksets, exit devices, and padlocks shall accept same interchangeable cores.

2.5.2 Lock Trim

Lock trim shall be cast, forged, or heavy wrought construction of commercial plain design. In addition to meeting the test requirement of BHMA ANSI/BHMA A156.2 or BHMA ANSI/BHMA A156.13, knobs, lever handles, roses, and escutcheons shall be 0.050 inch thick, if unreinforced. If reinforced, the outer shell shall be 0.035 inch thick and the combined thickness shall be 0.070 inch except that knob shanks shall be 0.060 inchthick. Knob diameter shall be 2-1/8 to 2-1/4 inches.Lever handles shall be of plain design with ends returned to no more than 1/2 inch from the door face.

2.6 EXIT DEVICES AND EXIT DEVICE ACCESSORIES

Exit devices and exit device accessories shall conform to BHMA ANSI/BHMA A156.3, Grade 1.

2.6.1 Exit Devices and Auxiliary Items

Trim shall be of wrought construction and commercial plain design with straight, beveled, or smoothly rounded sides, corners, and edges. Adjustable strikes shall be provided for rim type and vertical rod devices. Open back strikes shall be provided for pairs of doors with mortise and vertical rod devices; except open back strikes shall be used on labeled doors only where specifically provided for in the published listings. Touch bars shall be provided in lieu of conventional crossbars and arms. Escutcheons shall be provided not less than 7 by 2-1/4 inches. Escutcheons shall be cut to suit cylinders and operating trim.

2.7 #.1 REMOVABLE MULLIONS

Removable mullions shall be Type 22 of the box type and shall be used only with those exit devices for which the mullions were manufactured. Mullions shall be furnished with mullion stabilizers of the same manufacturer.

2.8 KEYING

Locks shall be keyed in sets or subsets upon direction given during the execution of the Keying Conference. Locks shall be furnished with the manufacturer's standard construction key system. Change keys for locks shall be stamped with change number and the inscription "U.S. Property - Do Not Duplicate. Keys shall be supplied as follows:

Locks:	3 change keys each lock.
Master keyed sets:	4 keys each set.
Grand master keys:	2 keys each set.
Control keys:	6 keys each set.
Construction keys:	6 keys each set.
Blank keys:	30% of total number of locks.

The keys shall be furnished to the base lock shop arranged in a container in sets or subsets as scheduled. When construction keys are specified, the following will be added to the paragraph: "Permanent keys shall be sent by the lock manufacturer directly to the base lock shop by registered mail or other approved means." A set of codes, including an extension of the set, along with Control, Grandmaster, Master, and change key combinations will be provided to the base lock shop via certified mail or handcarried. The contractor shall replace all construction cores by installing the permanent cores upon direction of the base lock shop and upon final instructions as set forth during the keying conference.

2.9 DOOR CLOSING DEVICES

Door closing devices shall conform to BHMA ANSI/BHMA A156.4, Grade 1. Closing devices shall be products of one manufacturer for each type specified. The opening resistance of closing devices shall not exceed 15 1bf applied at the latch stile or exceed 5 1bf where low opening resistance is scheduled.

2.9.1 Surface Type Closers

Surface type closers shall be Grade 1, Series C02000 Full Cover with options PT-4H,PT-4F, PT-4C, Size 1 or 2 through Size 6, and PT-4D with back check position valve. Except as otherwise specified, sizes shall conform to the manufacturer's published recommendations. Closers for outswinging exterior doors shall have parallel arms or shall be top jamb mounted. Closers for doors close to a wall shall be of narrow projection so as not to strike the wall at the 90-degree open position.

2.10 SMOKE DETECTORS AND ELECTRO-MAGNETIC HOLDERS

Electro-magnetic door holders shall conform to BHMA ANSI/BHMA A156.15 and shall release the door upon activation of the building fire alarm system or interruption of electric power.

2.11 ARCHITECTURAL DOOR TRIM

Architectural door trim shall conform to BHMA ANSI/BHMA A156.6.

2.11.1 Door Protection Plates

2.11.1.1 Kick Plates

Kick plates shall be stainless steel. Width of plates shall be 2 inches less than door width for single doors and 1 inch less for pairs of doors. Height shall be 16 inches, except where the bottom rail is less than 16 inches the plate shall extend to within 1/2 inch of the panel mold or glass bead. Edges of metal plates shall be square beveled.

2.12 #.1 PUSH PLATES

2.13 #.1 DOOR PULLS

Door pulls shall be Category J400 stainless steel of plain modern design. Pulls for hollow metal, mineral core wood or kalamein doors shall be Type J405 thru-bolted to Type J301 flat push plates.

2.14 AUXILIARY HARDWARE

Auxiliary hardware, consisting of door stops, shall conform to BHMA ANSI/BHMA A156.16. Lever extension flush bolts shall be Type L14081. Dust-proof strikes shall be Type L04011 for doors that are not fire rated. Dust-proof strikes shall be Type L04021 for fire rated doors. Other auxiliary hardware of the types listed below, shall conform to BHMA ANSI/BHMA A156.16.

2.15 MISCELLANEOUS

2.15.1 Metal Thresholds

Thresholds shall conform to BHMA ANSI/BHMA A156.21. Thresholds for exterior doors shall be extruded aluminum of the type indicated and shall provide proper clearance and an effective seal with specified weather stripping. Where required, thresholds shall be modified to receive projecting bolts of flush bolts or exit devices. Thresholds for doors accessible to the handicapped shall be beveled with slopes not exceeding 1:2 and with heights not exceeding 1/2 inch. Air leakage rate of weatherstripping shall not

exceed 0.5 cubic feet per minute per lineal foot of crack when tested in accordance with ASTM E 283 at standard test conditions.

2.15.2 Rain Drips

Extruded aluminum, not less than 0.07 inch thick, bronze anodized. Door sill rain drips shall be 1-1/2 inches to 1-3/4 inches high by 5/8 inch projection. Overhead rain drips shall be approximately 1-1/2 inches high by 2-1/2 inchesprojection and shall extend 2 inches on either side of the door opening width.

2.15.3 Aluminum Housed Type Weatherseals

Weatherseals of the type indicated shall consist of extruded aluminum retainers not less than 0.07 inch wall thickness with vinyl, neoprene, silicone rubber, polyurethane or vinyl brush inserts. Aluminum shall be bronze anodized. Weatherseal material shall be of an industrial/commercial grade. Seals shall remain functional through all weather and temperature conditions. Air leakage rate of weatherstripping shall not exceed 0.5 cubic feet per minute per lineal foot of crack when tested in accordance with ASTM E 283 at standard test conditions.

2.15.4 Gasketing

Gasketing shall be a compression type seal, silicon based, self-adhesive product for use on steel door frames with wood and steel and doors for 1-hour B-label. Color shall be white at interior doors and bronze at exterior doors. Air leakage rate of weatherstripping shall not exceed 0.5 cubic feet per minute per lineal foot of crack when tested in accordance with ASTM E 283 at standard test conditions.

2.16 FASTENINGS

Fastenings of proper type, size, quantity, and finish shall be supplied with each article of hardware. Machine screws and expansion shields shall be used for attaching hardware to concrete or masonry. Fastenings exposed to the weather in the finished work shall be of brass, bronze, or stainless steel. Sex bolts, through bolts, or machine screws and grommet nuts, where used on reverse-bevel exterior doors equipped with half-surface or full-surface hinges, shall employ one-way screws or other approved tamperproof screws. Screws for the jamb leaf of half-mortise and full-surface hinges attached to structural steel frames shall be one-way or other approved tamperproof type.

2.17 FINISHES

Unless otherwise specified, finishes shall conform to those identified in BHMA ANSI/BHMA A156.18. Where painting of primed surfaces is required, painting is specified in Section 09900 PAINTING, GENERAL. All hardware shall be finished 652 Satin Chrome, unless noted otherwise.

2.18 HARDWARE FOR FIRE DOORS

Hardware for fire doors shall conform to the requirements of NFPA 80and NFPA 101.

3 EXECUTION

3.1 APPLICATION

Hardware shall be located in accordance with DHI-04 and DHI-05, except that deadlocks shall be mounted 48 inches above finish floor. When approved, slight variations in locations or dimensions will be permitted. Application shall be in accordance with DHI-A115.IG or DHI A115-W. Door control devices for exterior doors such as closers and holders, shall be attached to doors with thru bolts and nuts or sex bolts. Alternate fastening methods may be approved by the Contracting Officer when manufacturers' documentation is submitted to verify that the fastening devices and door reinforcements are adequate to resist wind induced stresses. Electric hardware items and access control devices shall be installed in accordance with manufacturer's printed installation procedures.

3.1.1 Hardware for Fire Doors and Smoke-Control Door Assemblies

Hardware for fire doors shall be installed in accordance with the requirements of NFPA 80. Exit devices installed on fire doors shall have a visible label bearing the marking "Fire Exit Hardware". Other hardware installed on fire doors, such as locksets, closers, and hinges shall have a visible label or stamp indicating that the hardware items have been approved by an approved testing agency for installation on fire-rated doors. Hardware for smoke-control door assemblies shall be installed in accordance with NFPA 105.

3.1.2 Door-Closing Devices

Door-closing devices shall be installed and adjusted in accordance with the templates and printed instructions supplied by the manufacturer of the devices. Insofar as practicable, doors opening to or from halls and corridors shall have the closer mounted on the room side of the door.

3.1.3 Kick Plates

Kick plates shall be installed on the push side of single-acting doors.

3.1.4 Auxiliary Hardware

Lever extension flush bolts shall be installed at the top and bottom of the inactive leaf of pairs of doors. The bottom bolt shall operate into a dust-proof floor strike or threshold.

3.1.5 Thresholds

Thresholds shall be secured with a minimum of three fasteners per single door width and six fasteners per double door width with a maximum spacing of 12 inches. Exterior thresholds shall be installed in a bed of sealant with expansion anchors and stainless steel screws, except that bronze or anodized bronze thresholds shall be installed with expansion anchors with brass screws. Minimum screw size shall be No. 10 length, dependent on job conditions, with a minimum of 3/4 inch thread engagement into the floor or anchoring device used.

3.1.6 Rain Drips

Door sill rain drips shall align with the bottom edge of the door. Overhead rain drips shall align with bottom edge of door frame rabbet. Drips shall be set in sealant and fastened with stainless steel screws.

3.1.7 Weatherseals

Weatherseals shall be located as indicated, snug to door face and fastened in place with color matched metal screws after door and frames have been finish painted. Screw spacing shall be as recommended by manufacturer.

3.1.8 Gasketing

Gasketing shall be installed at the inside edge of the hinge and head and latch sides of door frame. Frames shall be toleranced for a 1/8 inch clearance between door and frame. Frames shall be treated with tape primer prior to installation.

3.2 OPERATIONAL TESTS

Prior to acceptance of any electrical hardware system, an operational test shall be performed to determine if devices are operating as intended by the specifications. Wiring shall be tested for correct voltage, current carrying capacity, and proper grounding. Stray voltages in lock wiring shall be eliminated to prevent locking devices from releasing in critical situations.

3.3 HARDWARE SETS

Quantity	Item	Type No.	Size	Remarks
DOOR HARDWARE				Manufacturer cited for reference to product type and quality and are not intended to limit submittals from additional manufacturers.
EXTERIOR DOORS				
HW-1				
PAIR EXIT ENTRY DOORS-(PROCESS WITH ALUMINUM DOORS AND FRAMES 08120) (DOORS ARE BRONZE ANODIZED FINISH, HARDWARE INTEGRAL WITH FRAME)				
3 Pr	Butts	A5111	4-1/2X4	NRP
2 ea	Exit device W/ self-latching bolts	6-08		S.S.Lever Handles Integral push bar.
2 ea	Dust proof strike	L04021		Strike compatible w/exit device.
2 ea	Closer	C02021		PT4C,PT4F,PT4H
1 ea	Threshold	443SD		Hager
1 set	Adjustable Meeting stile			mfr standard
1 set	Gasketting			mfr standard
2 ea	Bottom	315DN		Pemko
1 ea	O.H. Dripcaps	346D		Pemko
2 ea	Bumper	L02161		
2 ea	Kickplate	J102		

HW-2
PAIR VESTIBULE EXIT DOORS -(PROCESS WITH ALUMINUM DOORS AND FRAMES 08120)
(DOORS ARE BRONZE ANODIZED FINISH, HARDWARE INTEGRAL WITH FRAME)

3 Pr	Butts	A5111	4-1/2X4	NRP
2 ea	Closer	C02021		PT4C,PT4F,PT4H
1 ea	Threshold	271D		Pemko
1 set	Adjustable Meeting stile			mfr standard
1 set	Gasketting			mfr standard
2 ea	“Dummy” Panic Push Bar			
2 ea	Bottom	315DN		Pemko
2 ea	Bumper	L02261		
2 ea	Pull devices	J402		
2 ea	Kickplate	J102		

HW-3 DOOR TO OFFICES

1.5 Pr	Butts	A5111	4-1/2X4-1/2	NRP
1 ea	F04			S.S.Lever Handles
1 ea	Closer	C02011		PT4D,PT4F,PT4H
1 set	Silencers	L03011		
1 ea	Kickplate	J102		
1 ea	Bumper	L02261		

(For doors at Rooms 121B, 221A, 227, 234A, 201B – closers shall be C02021)

HW-4
(1 HR DOOR SYSTEM) STAIR

1.5 Pr	BUTTS	A5111	4-1/2X4-1/2	NRP
1 ea	F01			S.S.Lever Handles
1 ea	Closer	C02011		PT4D,PT4F,PT4H
1 set	Gasketting	S88W		Pemko
1 ea	Kickplate	J102		
1 ea	Electromagnetic Door Holder	C00011		

HW-5
TOILET/LOCKER ROOM DOORS (DISABLED ACCESS)

1.5 Pr	BUTTS	A5111	4-1/2X4-1/2	NRP
1 ea	F01			S.S.Lever Handles
1 ea	Closer	C02011		PT4D,PT4F,PT4H
1 set	Silencers	L03011		
1 ea	Kickplate	J102		
1 ea	Bumper	L02261		
1 set	Gasketting	S88W		Pemko

HW-6
PAIR DOORS WITH INACTIVE LEAF

3 Pr	Butts	A5111	4-1/2X4-1/2	NRP
1 ea	F04			S.S.Lever Handles
1 ea	Closer	C02011		PT4D,PT4F,PT4H
2 ea	Kickplate	J102		
1 set	Adjustable Meeting stile	354C		Pemko

2 ea	Bumper	L02261		
1 set	Flushbolts	L04081		Inactive Leaf

HW-7
EXTERIOR PAIR DOORS W/INACTIVE LEAF

3 Pr	BUTTS	A5111	4-1/2X4-1/2	NRP
1 ea	F04			S.S.Lever Handles on interior only.
1 set	Flushbolts	L14081		inactive leaf
1 ea	Astragal	357D		Pemko
1 ea	Threshold	257D		Pemko
1 ea	Closer	C02011		Pt4c
1 set	Gasketting	S88D		Pemko
2 ea	Kickplates	J102		
1 ea	O.H. Dripcaps	346D		Pemko
2 ea	Door holder	L01381		
1 ea	Dustproof strike	L04021		
2 ea	Bottom	315DN		Pemko

HW-8
COILING COUNTER DOOR

1 ea	lock	mfr standard

Provide weatherstripping at jambs, full width of header and bottom of desk.
Note: Hardware by door supplier

HW-9
HORIZONTAL FIRE DOOR-1 HR RATING

Note: Hardware by door supplier

HW-10 EXTERIOR DOOR

1.5 Pr	Butts	A5111	4-1/2X4-1/2	NRP
1 ea	F04			S.S.Lever Handles
1 ea	Closer	C02021		PT4C
1 set	Gasketting	S88D		Pemko
1 ea	O.H. Dripcaps	346D		Pemko
1 ea	Threshold	257A		Pemko
1 ea	Door holder	L01381		
1 ea	Threshold	271D		
1 ea	Bottom	315DN		Pemko
1 ea	Kickplate	J102		

HW-11
EXIT ENTRY DOOR-(PROCESS WITH ALUMINUM DOORS AND FRAMES 08120)
(DOORS ARE BRONZE ANODIZED FINISH, HARDWARE INTEGRAL WITH FRAME)

1.5 Pr	Butts	A5111	4-1/2X4	NRP
1 ea	Exit device W/ self-latching bolts	6-08		S.S.Lever Handles Integral push bar.
1 ea	Dust proof strike	L04021		Strike compatible w/exit device.
1 ea	Closer	C02021		PT4C,PT4F,PT4H
1 ea	Threshold	443SD		Hager

1 set	Gasketting			mfr standard
1 ea	Bottom	315DN		Pemko
1 ea	O.H. Dripcaps	346D		Pemko
1 ea	Bumper	L02161		

HW-13
PAIR DOORS (READY RM & MAINTENANCE ADMIN)

3 Pr	Butts	A5111	4-1/2X4-1/2	NRP
2 ea	Exit device	6-10		S.S.Lever Handles
	W/ self-latching bolts			Integral push bar.
2 ea	Dust proof			Strike compatible
	strike	L04021		w/exit device.
2 ea	Closer	C02021		PT4D,PT4F,PT4H
2 ea	Kickplate	J102		
1 set	Adjustable Meeting			
	stile	354C		Pemko
2 ea	Bumper	L02261		
1 ea	Coordinators			

HW-14
EXTERIOR PAIR DOORS (READY RM, REAR ENTRY)

3 Pr	BUTTS	A5111	4-1/2X4-1/2	NRP
2 ea	Exit Device	6-10		S.S.Lever Handles on
	w/Self-latching Bolts			Integral Push Bar
1 ea	Threshold	257D		Pemko
2 ea	Closer	C02021		Pt4c
1 set	Gasketting	S88D		Pemko
2 ea	Kickplates	J102		
1 ea	O.H. Dripcaps	346D		Pemko
2 ea	Door holder	L01381		
2 ea	Dustproof	L04021		
	strike			
1 set	Adjustable			
	Meeting Stile	354C		Pemko
2 ea	Bottom	315DN		Pemko

HW-15
PAIR DOORS (VESTIBULE)

2 ea	‘Dummy’ panic			
	push bar			
3 Pr	Butts	A5111	4-1/2X4-1/2	NRP
1 set	Adjustable	354C		Pemko
	Meeting			
	Stile			
1 ea	Threshold	257D		Pemko
2 ea	Closer	C02021		Pt4c
1 set	Gasketting	S88W		Pemko
2 ea	Kickplating	J102		
2 ea	Bumper	L02261		
2 ea	Bottom	315DN		Pemko
2 ea	Pull devices	J402		

HW-16 DOOR WITH CYPHER LOCK (TACTICS)

1.5 Pr	Butts	A5111	4-1/2X4-1/2	NRP

1 ea	F04		S.S.Lever Handles
1 ea	Cypher lock*		Simplex
1 ea	Closer	C02011	Pt4D,PT4F,PT4H
1 ea	Kickplate	J102	
1 ea	Bumper	L02261	
1 ea	Cypher lock strike plate		
1 set	Gasketting	S88D	Pemko

* Exterior access by combination, key override, or passage feature (thumb turn activated) egress by interior lever.

HW-17 DOOR-1 HR RATING (Janitor, ELEC., ELEV. MACHINE, COMMUNICATIONS)

1.5 Pr	Butts	A5111 4-1/2X4-1/2	NRP
1 ea	F04		S.S.Lever Handles
1 ea	Closer	C02021	Pt4D,PT4F,PT4H
1 ea	Kickplate	J102	
1 ea	Bumper	L02261	
1 set	Gasketting	S88D	Pemko

(For door at Room 214A– Closer shall be C02011)

HW-18 PAIR DOORS (HALL)

3 Pr	Butts	A5111 4-1/2X4-1/2	NRP
2 ea	Closer	C02011	PT4D, PT4F, PT4H
2 ea	Kickplate	J102	
1 set	Adjustable Meeting stile	354C	
1 set	Gasketting	S88W	Pemko
2 ea	Holder	L01241	
1 set	Flushbolts	L04081	Inactive Leaf
2 ea	Pulls	J405	
2 ea	Push Plates	J301	
1 ea	Dead Lock	E06071	

HW-19 PAIR DOORS WITH CYPHER LOCKS (BUS SHELTER)

3 Pr	Butts	A5111 4-1/2X4-1/2	NRP
2 ea	F04		S.S. Lever Handles
2 ea	Closer	C02021	PT4D, PT4F, Pt4H
2 ea	Kickplates	J102	
2 ea	Bumper	L02261	
2 sets	Gasketting	S88D	Pemko
2 ea	Threshold	257D	Pemko
2 ea	Bottom	315DN	Pemko
2 ea	Door holder	L01381	
2 ea	Cypher lock*		Simplex

* Exterior access by combination, key override, or passage feature (thumb turn activated) egress by interior lever

HW-20 OVERHEAD DOORS

1 ea	Lock	Mfr. Standard
Provide weatherstripping at all door edges.		
1 ea	Chain drive lock	Mfr. Standard

Note: Hardware by door supplier.

END OF SECTION

SECTION 08810

GLASS AND GLAZING

1 GENERAL

1.1 REFERENCES

The publications listed below form a part of this specification to the extent referenced. The publications are referred to in the text by basic designation only.

AMERICAN NATIONAL STANDARDS INSTITUTE (ANSI)

ANSI Z97.1	(1984; R 1994) Safety Performance Specifications and Methods of Test for Safety Glazing Materials Used in Buildings

AMERICAN SOCIETY FOR TESTING AND MATERIALS (ASTM)

ASTM C 509	(1991) Elastomeric Cellular Preformed Gasket and Sealing Material
ASTM C 669	(1975; R 1989) Glazing Compounds for Back Bedding and Face Glazing of Metal Sash
ASTM C 864	(1990) Dense Elastomeric Seal Gaskets, Setting Blocks, and Spacers
ASTM C 920	(1987) Elastomeric Joint Sealants
ASTM C 1036	(1991) Flat Glass
ASTM C 1048	(1992) Heat-Treated Flat Glass - Kind HS, Kind FT Coated and Uncoated Glass
ASTM C 1172	(1991) Laminated Architectural Flat Glass
ASTM D 395	(1989) Rubber Property - Compression Set
ASTM E 152	(1981a) Fire Tests of Door Assemblies
ASTM E 163	(1984) Fire Tests of Window Assemblies
ASTM E 773	(1988) Seal Durability of Sealed Insulating Glass Units
ASTM E 774	(1988) Sealed Insulating Glass Units
ASTM E 1300	(1994) Determining the Minimum Thickness and Type of Glass Required to Resist a Specified Load

AMERICAN SOCIETY OF CIVIL ENGINEERS (ASCE)

ASCE 7	(1993) Minimum Design Loads for Buildings and Other Structures

CODE OF FEDERAL REGULATIONS (CFR)

16 CFR 1201	Safety Standard for Architectural Glazing Materials

GLASS ASSOCIATION OF NORTH AMERICA (GANA)

GANA 04	(1995) Engineering Standards Manual

FEDERAL SPECIFICATIONS (FS)

FS DD-M-411	(Rev C) Mirrors, Glass
FS TT-P-00791	(Rev B; Am 2) Putty: Linseed-Oil Type, (For Wood-Sash-Glazing)

FLAT GLASS MARKETING ASSOCIATION (FGMA)

FGMA-01	(1990) Glazing Manual

NATIONAL FIRE PROTECTION ASSOCIATION (NFPA)

NFPA 80	(1992) Fire Doors and Windows
NFPA 252	(1995) Fire Tests of Door Assemblies

1.2 SUBMITTALS

Government approval is required for submittals with a "GA" designation; submittals having an "FIO" designation are for information only. The following shall be submitted in accordance with Section 01330 SUBMITTAL PROCEDURES:

SD-01 Data

Glass; FIO. Glazing Accessories; FIO.

Manufacturer's descriptive product data, handling and storage recommendations, installation instructions, and cleaning instructions.

SD-04 Drawings

Glazing Materials and Accessories; GA.

Drawings showing complete details of the proposed setting methods, mullion details, edge blocking, size of openings, frame details, materials, and types and thickness of glass.

SD-13 Certificates

Glass; FIO.

Certificates stating that the glass meets the specified requirements. Labels or manufacturer's marking affixed to the glass will be accepted in lieu of certificates.

SD-14 Samples

Glass; GA.

Two 8 x 10 inch samples of each of the following: patterned glass, heat-absorbing glass, and insulating glass units.

1.3 SYSTEM DESCRIPTION

Glazing systems shall be fabricated and installed watertight and airtight to withstand thermal movement and wind loading without glass breakage, gasket failure, deterioration of glazing accessories, and defects in the work. Glazed panels shall comply with the safety standards, as indicated in accordance with ANSI Z97.1. Glazed panels shall comply with indicated wind/snow loading in accordance with ASTM E 1300.

1.4 DELIVERY, STORAGE AND HANDLING

Glazing compounds shall be delivered to the site in the manufacturer's unopened containers. Glass shall be stored indoors in a safe, well ventilated dry location in accordance with manufacturer's instructions, and shall not be unpacked until needed for installation. Glass shall not be stored on site over 1 month.

1.5 PROJECT/SITE CONDITIONS

Glazing work shall not be started until outdoor temperature is above 40 degrees F and rising, unless procedures recommended by glass manufacturer and approved by Contracting Officer are made to warm the glass and rabbet surfaces. Ventilation shall be provided to prevent condensation of moisture on glazing work during installation. Glazing work shall not be performed during damp or raining weather.

1.6 WARRANTY

1.6.1 Heat-Absorbing Insulating Glass

Manufacturer shall warrant the insulating glass to be free of fogging or film formation on the internal glass surfaces caused by failure of the hermetic seal for a period of 10 years from Date of Substantial Completion. Warranty shall be signed by manufacturer.

2 PRODUCTS

2.1 ROLLED GLASS

2.1.1 Patterned Glass

Patterned glass shall be Type II flat type. Class 1 - translucent absorbing, Finish f1 - patterned one side, Quality q7 - decorative, conforming to ASTM C 1036. Color shall be clear.

2.1.2 Wired Glass

Wired glass shall be Type II flat type, Class 1 - translucent, Quality q7 - decorative, Form 1 - wired and polished both sides, conforming to ASTM C 1036. Wire mesh shall be polished stainless steel Mesh 1 - diamond. Wired glass for fire-rated doors shall be tested as part of a door assembly in accordance with NFPA 252. Color shall be clear.

2.2 INSULATING GLASS

Insulating glass shall be Class A preassembled units of dual-seal construction consisting of lites of glass separated by an aluminum spacer and dehydrated space conforming to ASTM E 773 and ASTM E 774. Aluminum spacer shall be roll-formed, with bent or tightly welded or keyed and sealed joints to completely seal the spacer periphery and eliminate moisture and hydrocarbon vapor transmission into airspace through the corners. Primary seal shall be compressed polyisobutylene and the secondary seal shall be a specially formulated silicone. Glass types shall be as follows:

2.2.1 Heat-Absorbing Insulating Glass (Tinted)

Interior and exterior glass panes for heat-absorbing insulating units shall be Type I annealed flat glass, Class 2-tinted, Quality q3 - glazing select conforming with ASTM C 1036. Glass performance shall be R-Value/U-ValueWinter Nighttime 0.43, shading coefficient 0.31. Color shall be green. Match color of existing adjacent Squadron Operations Facility, FY 96.

2.3 HEAT-TREATED GLASS

Heat-treated glass shall conform to the following requirements.

2.3.1 Tempered Glass

Tempered glass shall be kind FT fully tempered transparent flat type, Class 2-tinted, Condition A uncoated surface, Quality q3 - glazing select, 62 percent light transmittance, 73 percent shading coefficient conforming to ASTM C 1048 and GANA 04. Color shall be green and shall match color of existing adjacent Squadron Operations Facility, FY 96.

2.3.2 Tempered Protection Screen Glass

Tempered glass shall be kind FT fully tempered transparent flat type, Class 1-clear, Condition C optical coated surface, Quality q3 - glazing select, conforming ASTM C 1048. Factory applied optical surface shall consist of one surface not to exceed 0.004 inches in thickness with a protective wearing surface over the optical coating. Coated surfaces shall be oriented to the "Viewing Side" of the wall.

2.4 FIRE/SAFETY RATED GLASS

Fire/safety rated glass shall be laminated Type I transparent flat type, Class 1-clear. Glass for fire rated doors shall be tested as part of a door assembly in accordance with NFPA 252. Glass shall be permanently labeled with appropriate markings.

2.5 GLAZING ACCESSORIES

2.5.1 Preformed Tape

Preformed tape shall be elastomeric rubber extruded into a ribbon of a width and thickness suitable for specific application. Tape shall be of type which will remain resilient, have excellent adhesion, and be chemically compatible to glass, metal, or wood.

2.5.2 Sealant

Sealant shall be elastomeric conforming to ASTM C 920, Type S or M, Grade NS, Class 12.5, Use G, of type chemically compatible with setting blocks, preformed sealing tape and sealants used in manufacturing insulating glass. Color of sealant shall match adjacent material.

2.5.3 Glazing Gaskets

Glazing gaskets shall be extruded with continuous integral locking projection designed to engage into metal glass holding members to provide a watertight seal during dynamic loading, building movements and thermal movements. Glazing gaskets for a single glazed opening shall be continuous one-piece units with factory-fabricated injection-molded corners free of flashing and burrs. Glazing gaskets shall be in lengths or units recommended by manufacturer to ensure against pull-back at corners.

2.5.3.1 Fixed Glazing Gaskets

Fixed glazing gaskets shall be closed-cell (sponge) smooth extruded compression gaskets of cured elastomeric virgin neoprene compounds conforming to ASTM C 509, Type 2, Option 1.

2.5.3.2 Wedge Glazing Gaskets

Wedge glazing gaskets shall be high-quality extrusions of cured elastomeric virgin neoprene compounds, ozone resistant, conforming to ASTM C 864, Option 1, Shore A durometer between 65 and 75.

2.5.3.3 Aluminum Framing Glazing Gaskets

Glazing gaskets for aluminum framing shall be permanent, elastic, non-shrinking, non-migrating, watertight and weathertight.

2.5.4 Setting and Edge Blocking

Neoprene setting blocks shall be dense extruded type conforming to ASTM D 395, Method B, Shore A durometer between 70 and 90. Edge blocking shall be Shore A durometer of 50 (+ or - 5). Silicone setting blocks shall be required when blocks are in contact with silicone sealant. Profiles, lengths and locations shall be as required and recommended in writing by glass manufacturer.

3 EXECUTION

3.1 PREPARATION

Openings and framing systems scheduled to receive glass shall be examined for compliance with approved shop drawings, FGMA-01 and glass manufacturer's recommendations including size, squareness, offsets at corners, presence and function of weep system, face and edge clearance requirements and effective sealing between joints of glass-framing members. Detrimental materials shall be removed from glazing rabbet and glass surfaces and wiped dry with solvent. Glazing surfaces shall be dry and free of frost.

3.2 INSTALLATION

Glass and glazing work shall be performed in accordance with approved shop drawings, FGMA-01, glass manufacturer's instructions and warranty requirements. Glass shall be installed with factory labels intact and removed only when instructed. Wired glass shall be installed in accordance with NFPA 80. Edges and corners shall not be ground, nipped or cut after leaving factory. Springing, forcing or twisting of units during installation will not be permitted.

3.3 CLEANING

Upon completion of project, outside surfaces of glass shall be washed clean and the inside surfaces of glass shall be washed and polished in accordance with glass manufacturer's recommendations.

3.4 PROTECTION

Glass work shall be protected immediately after installation. Glazed openings shall be identified with suitable warning tapes, cloth or paper flags, attached with non-staining adhesives. Reflective glass shall be protected with a protective material to eliminate any contamination of the reflective coating. Protective material shall be placed far enough away from the coated glass to allow air to circulate to reduce heat buildup and moisture accumulation on the glass. Glass units which are broken, chipped, cracked, abraded, or otherwise damaged during construction activities shall be removed and replaced with new units.

END OF SECTION

SECTION 08950

INSULATED TRANSLUCENT FIBERGLASS SKYLIGHT SYSTEM

1 GENERAL

1.1 REFERENCES

AMERICAN SOCIETY FOR TESTING MATERIALS (ASTM)

ASTM C 297	(1994) Flatwise Tensile Strength of Sandwich Constructions
ASTM D 635	(1996)Test Method for Rate of Burning and/or Extent and Time of Burning of Self-Supporting Plastics in a Horizontal Position
ASTM D 1002	(1994a) Initial Tear Resistance of Plastic Film and Sheeting
ASTM D 1037	(1996a) Test Methods of Evaluating the Properties of Wood-Based Fiber and Particle Panel Material
ASTM D 1183	(1996e1) Resistance of Adhesives to Cyclic Laboratory Aging Conditions
ASTM D 2244	(1993) Test Method of Calculation of Color Differences from Instrumentally Measured Color Coordinates
ASTM E 84	(1996a) Surface Burning Characteristics of Building Materials
ASTM E 108	(1990) Test Methods for Fire Tests of Roof Coverings

AMERICAN NATIONAL STANDARDS INSTITUTE (ANSI)

ANSI/AAMA 605.2	(1985) Architectural Corrosion Resistant Finishes

1.2 SUBMITTALS

Government approval is required for submittals with a "GA" designation; submittals having a "FIO" designation are for information only. The following shall be submitted in accordance with Section 01330SUBMITTAL PROCEDURES:

SD-05, Design Data

Product Data; FIO

Manufacturers data showing materials, fabrication, installation instructions and recommendations, and maintenance and reglazing instructions.

SD-04, Drawings; GA

Shop drawings showing elevations, dimensions, shapes of members, details of composite members, details of interface with structure, reinforcement, expansion provisions, method and location of attachment to structural system, and glazing materials and methods.

SD-14, Samples; GA

Translucent panels

Provide a 1'-2-inch x 2'-4-inch sample with aluminum eve and ridge sections indicating mounting provisions.

Coated finishes

Submit manufacturers standard coated finishes on 6-inch square sheets.

SD-09, Reports; F10

Submit test reports made by independent testing organization for each type and class of panel system. Reports shall verify the material will meet all performance requirements of this specification.

SD-05, Calculations; GA

Submit calculations which prove panels in there proposed configuration will conform to UL-580, Class 90 minimum uplift. Calculations shall be stamped and signed by a Washington State Registered engineer.

SD-06, Installation; GA

Erection and installation shall be by an installer which has been in the business of erecting specified materials for at least five(5)consecutive years; and can show evidence of satisfactory completion of projects of similar size, scope and type.

SD-08, Warranty; GA

Submit manufacturer's standard product 5 year warranty signed by the manufacturer's authorized official, guaranteeing to correct failures in the product which may occur during the 5 years from date of project acceptance. Warranty on the permanent glass erosion barrier shall be 25 years.

1.3 DELIVERY AND STORAGE

Store skylight panels on the long edge, 6 inches above the ground, blocked and under cover to prevent warping of the panels.

2 PRODUCTS

2.1 MATERIALS

Material shall be the standard products of a manufacturer regularly engaged in the manufacture for at least (10) ten years. Manufacturer shall be responsible for the configuration and fabrication of the skylight panel system.

2.1.1 Translucent "Skylight" Panel System

2.1.1.1 Translucent fiberglass faces

Fiberglass faces shall be manufactured from glass fiber reinforced thermoset resins by manufacturer intended for architectural use.

2.1.1.2 a Flammability

The interior face sheet shall be U.L. listed and have a flamespread rating no greater than 25 and smoke developed no greater than 100 when tested in accordance with ASTM E 84. Burn extent by ASTM D 635 shall be no greater than 1 inch. Faces shall not deform, deflect or drip when subjected to fire or flame; or become detached when subjected to 300 degrees F for one (1) hour.

2.1.1.3 b Weatherability

a. The full thickness of the exterior face shall not change color more than 3.0 Hunter or CIE units (DELTA E by ASTM D 2244) after five (5) years outdoor South Florida weathering at 7 degrees facing south, determined by the average of at least three (3) white samples without a protective film or coating to insure maximum long term color stability.

b. The exterior face shall have a permanent glass erosion barrier to provide maximum long term resistance to reinforcing fiber exposure and shall be warranted against the same for twenty-five (25) years non-prorated. Plastic film overlays are not permitted.

2.1.1.4 c Appearance

a. The face sheets shall be uniform in color to prevent splotchy appearance. Faces shall be completely free of ridges and wrinkles which prevent proper surface contact in bonding to the aluminum grid core. Clusters of air bubbles/pinholes which collect dirt or moisture are not acceptable.

b. Exterior face sheets shall be smooth, 0.070 inch thick and white in color. Interior face sheets shall be 0.045 inch thick and white in color. Faces shall not vary more than + -10% in thickness.

2.1.1.5 d Strength

The exterior face sheet shall be uniform in strength and repel an impact equal to 60 ft-lbs without fracture or tear when impacted by a 3-1/2 inch diameter 6.37 lb free falling ball.

2.1.2 Non-Combustible Grid Core

The aluminum I-beams shall be 6063-T6 or 6005-T5 with provisions for mechanical interlocking of muntin-mullion and perimeter to prevent high and low intersections which do not allow full bonding surface to contact with face material. Width of I-beam shall be no less than 7/16 inches. Aluminum I-beam grid shall be machined to tolerances of not greater than + -0.002 inch. Panels shall withstand 1200 degree F fire for a minimum of one (1) hour without collapse or exterior flaming.

2.1.3 Adhesive

a. The laminate adhesive shall be heated and pressure resin-type engineered for structural sandwich panel use. Adhesive shall be independent code certified.

b. Adhesive shall withstand a 750 psi tensile strength test by ASTM C 297 after two (2) exposures to six (6) cycles each of the aging conditions prescribed by ASTM D 1037.

Shear strength for the following exposures by ASTM D 1002 and ASTM D 1183.

1. 50% relative humidity at 73 degrees F: 540 psi
2. Accelerated aging: 700 psi
3. 182 degrees F: 60 psi
4. Full cycle soak 715 psi
5. 500 hour oxygen bomb 1400 psi

2.1.4 Panel Construction

a. Skylight panels shall have a thickness of 2-3/4 inch with a "U" factor of 0.53 and a light transmission of 30 percent.

b. Skylight panels shall be a true sandwich panel of flat fiberglass sheets bonded to a grid core of mechanically interlocking aluminum I-beams and shall be laminated under a controlled process of heat and pressure.

c. Grid pattern shall be a nominal 12 inch x 24 inch and symmetrical about the horizontal centerline of each panel.

d. The adhesive bonding line shall be straight, cover the entire width of the I-beam and have a neat, sharp edge. In order to insure bonding strength, white spots at intersections of muntins and mullions shall not exceed four(4) for each forty (40) square feet of panel, nor shall they be more than 3/64 inch in width.

e. Skylight panels and aluminum perimeter frame shall be pre-assembled where practical and sealed at the factory. Panels should be shipped to the job site in rugged shipping units and shall be ready for erection.

2.1.5 Battens and Perimeter Closure System

a. Extruded 6063-T6 and 6063-T5 aluminum screw clamp-tite closure system.

b. Aluminum closures to be supplied with 300 series stainless steel screws (excluding final fasteners to the building) and shall be factory sealed to the panels. Aluminum battens and cap plates shall be field installed. Make provisions for protection of dissimilar materials.

c. All exposed aluminum to be mill architectural corrosion resistant finish which meet the performance requirements of ANSI/AAMA 605.2, color to be selected from manufacturers standards and shall be a Fluoropolymer(70 percent)Kynar 500 process.

2.1.6 Flexible Sealing Tape

Sealing tape shall be manufacturer's standard pre-applied to closure system at the factory under controlled conditions.

2.1.7 Fasteners

Fasteners shall be compatible with aluminum, nonmagnetic stainless steel, or other noncorrosive, noncorrodible material with meet all uplift and structural requirements.

3 EXECUTION

3.1 PREPARATION

The general contractor shall prepare openings including isolating dissimilar materials from aluminum system which may cause electrolysis.

3.2 ERECTION

a. The erector shall erect translucent skylight system in strict accordance with approved shop drawings as supplied from the manufacturer. Fastening and sealing shall be in strict accordance with the manufacturer's shop drawings. All aluminum shall be cleaned before sealants are applied.

b. After other trades have completed work on adjacent material, carefully inspect translucent panel installation and make adjustments necessary to insure proper installation and weather-tite conditions.

c. Coordinate all staging, lift and hoist requirements with the general contractor.

--End of Section--

SECTION 09250

GYPSUM WALLBOARD

1 GENERAL

1.1 REFERENCES

The publications listed below form a part of this specification to the extent referenced. The publications are referred to in the text by basic designation only.

AMERICAN SOCIETY FOR TESTING AND MATERIALS (ASTM)

ASTM A 580	(1995a) Stainless and Heat Resisting Steel Wire
ASTM A 853	(1993) Steel Wire, Carbon, for General Use
ASTM B 164	(1993) Nickel-Copper Alloy Rod, Bar, and Wire
ASTM C 36	(1995) Gypsum Wallboard
ASTM C 79	(1994) Gypsum Sheathing Board
ASTM C 475	(1994) Joint Compound and Joint Tape for Finishing Gypsum Board
ASTM C 514	(1996) Nails for the Application of Gypsum Board
ASTM C 557	(1993a) Adhesive for Fastening Gypsum Wallboard to Wood Framing
ASTM C 630	(1996a) Water-Resistant Gypsum Backing Board
ASTM C 645	(1995) Non-Load (Axial) Bearing Steel Studs, Runners (Track), and Rigid Furring Channels for Screw Application of Gypsum Board
ASTM C 754	(1996) Installation of Steel Framing Members to Receive Screw-Attached Gypsum Board
ASTM C 840	(1996) Application and Finishing of Gypsum Board
ASTM C 931	(1995) Exterior Gypsum Soffit Board
ASTM C 955	(1995) Load-Bearing (Transverse and Axial) Steel Studs, Runners (Tracks), and Bracing or Bridging for Screw Application of Gypsum Board and Metal Plaster Bases
ASTM C 960	(1996) Predecorated Gypsum Board

ASTM C 1002	(1996a) Steel Drill Screws for the Application of Gypsum Board or Metal Plaster Bases
ASTM C 1047	(1994) Accessories for Gypsum Wallboard and Gypsum Veneer Base

GYPSUM ASSOCIATION (GA)

GA 216	(1996) Application and Finishing of Gypsum Board
GA 600	(1994) Fire Resistance Design Manual

UNDERWRITERS LABORATORIES (UL)

UL-05	(1997) Fire Resistance Directory

1.2 SYSTEM DESCRIPTION

1.2.1 Fire-Rated Construction

Joints of fire-rated gypsum board enclosures shall be closed and sealed in accordance with UL test requirements or GA requirements, and as required to meet pressurization requirements. Penetrations through rated partitions and ceilings shall be sealed tight in accordance with tested systems. Fire ratings shall be as indicated.

1.3 SUBMITTALS

Government approval is required for submittals with a "GA" designation; submittals having an "FIO" designation are for information only. The following shall be submitted in accordance with Section 01330 SUBMITTAL PROCEDURES:

SD-04 Drawings

Steel Framing; FIO. Control Joints; FIO. Fire-Resistant Assemblies; FIO.

Drawings and installation details for ceiling framing, furring, special wall framing, and framed openings in walls and ceilings.

SD-13 Certificates

Gypsum Wallboard; FIO. Steel Framing; FIO. Fire-Rated Gypsum Board; FIO.

Certificates stating that the steel framing and gypsum wallboard meet the specified requirements.

1.4 QUALIFICATIONS

Manufacturer shall specialize in manufacturing the types of material specified and shall have a minimum of 10 years of documented successful experience. Installer shall specialize in the type of gypsum board work required and shall have a minimum of 5 years of documented successful experience.

1.5 DELIVERY, STORAGE AND HANDLING

Materials shall be delivered in original containers bearing the name of manufacturer, contents, and brand name. Materials shall be stored off the ground in a weathertight structure for protection. Gypsum boards shall be stacked flat, off floor and supported to prevent sagging and warpage. Adhesives and joint materials shall be stored in accordance with manufacturer's printed instructions. Damaged or deteriorated materials shall be removed from jobsite.

1.6 ENVIRONMENTAL CONDITIONS

Environmental conditions for application and finishing of gypsum board shall be in accordance with ASTM C 840. During the application of gypsum board without adhesive, a room temperature of not less than 40 degrees F shall be maintained. During the application of gypsum board with adhesive, a room temperature of not less than 50 degrees F shall be maintained for 48 hours prior to application and continuously afterwards until completely dry. Building spaces shall be ventilated to remove water not required for drying joint treatment materials. Drafts shall be avoided during dry hot weather to prevent materials from drying too rapidly.

2 MATERIALS

2.1 NON-LOADBEARING STUD WALLS

2.1.1 Studs

Studs for non-loadbearing walls shall conform to ASTM C 645. Studs shall be C-shaped, roll formed steel with minimum uncoated design thickness of 0.0329 in. (20 gauge) unless otherwise noted made from G40 hot-dip galvanized coated sheet. Shaftwall type studs where indicated shall be C-T shaped, roll formed steel with minimum uncoated design thickness of 0.0359 in. (20 gauge) made from G40 hot-dip galvanized coated sheet.

2.1.2 Runner Tracks

Floor and ceiling runner tracks shall conform to ASTM C 645. Tracks shall be prefabricated, U-shaped with minimum 1 inch flanges, unpunched web, thickness to match studs, made from G40 hot-dip galvanized coated sheet.

2.2 LOADBEARING STUD WALLS

2.2.1 Studs

Studs for loadbearing walls shall conform to ASTM C 955. Studs shall be C-shaped roll formed steel made from minimum G60 hot-dip galvanized coated sheet. Stud sizes and base metal design thickness shall be as shown.

2.2.2 Runner Tracks

Floor and ceiling runner tracks shall conform to ASTM C 955. Runners shall be prefabricated, U-shaped with minimum 3/4 inch flanges, unpunched web, thickness to match studs, made from G60 hot-dip galvanized coated sheet.

2.2.3 Bridging

Bridging for loadbearing walls shall conform to ASTM C 955. Bridging shall be minimum 3/4 x 3/4 inch cold-rolled steel channel with weld attachment clips at each stud or V-bar type weld or screw attached to each stud flange. Bridging shall be adequate to provide lateral support for the stud.

2.3 SUSPENDED CEILING FRAMING

Carrying channels shall be formed from 0.0548 in thick cold-rolled steel, 1-1/2 x 3/4 inch. Furring members shall be formed from cold-rolled steel, 7/8 x 2-9/16 inch. Carrying channels and furring members shall be made from hot-dip galvanized coated sheet.

2.4 GYPSUM BOARD

Gypsum board shall have square-cut ends, tapered or beveled edges and shall be maximum possible length. Gypsum board thickness shall be as shown.

2.4.1 Standard Gypsum Board

Regular gypsum board shall conform to ASTM C 36, and shall be 48 inches wide.

2.4.2 Fire-Rated Gypsum Board

Fire-rated gypsum board shall conform to ASTM C 36, and shall be Type X or Type C as required, 48 inches wide.

2.4.3 Shaftwall Liner Panel

Shaftwall liner panel shall conform to UL listing. Liner Panel shall be specifically manufactured for cavity shaftwall system, with water-resistant paper faces, bevel edges, single lengths to fit required conditions, 1 inch thick, by 24 inches wide.

2.5 TRIM, MOLDINGS, AND ACCESSORIES

2.5.1 Taping and Embedding Compound

Taping and embedding compound shall conform to ASTM C 475. Compound shall be specifically formulated and manufactured for use in embedding tape at gypsum wallboard joints and fastener heads, and shall be compatible with tape and substrate.

2.5.2 Finishing or Topping Compound

Finishing or topping compound shall conform to ASTM C 475. Compound shall be specifically formulated and manufactured for use as a finishing compound for gypsum board.

2.5.3 All-Purpose Compound

All-purpose compound shall be specifically formulated and manufactured to use as a taping and finishing compound, and shall be compatible with tape and substrate.

2.5.4 Joint Tape

Joint tape shall conform to ASTM C 475 and shall be as recommended by gypsum board manufacturer.

2.5.5 Trim, Control Joints, Beads, Stops and Nosings

Items used to protect edges, corners, and to provide architectural features shall be in accordance with ASTM C 1047.

2.6 FASTENINGS AND ADHESIVES

2.6.1 Nails

Nails shall conform to ASTM C 514. Nails shall be hard-drawn low or medium-low carbon steel, suitable for intended use. Special nails for predecorated gypsum board shall be as recommended by predecorated gypsum board manufacturer.

2.6.2 Screws

Screws shall conform to ASTM C 1002. Screws shall be self-drilling and self-tapping steel, Type G for gypsum board to gypsum board, Type S for wood or light-gauge steel framing.

2.6.3 Adhesives

Adhesives shall conform to ASTM C 557. Adhesives shall be formulated to bond gypsum board to wood framing members. For securing gypsum board to metal framing, adhesive shall be as recommended by gypsum board manufacturer.

2.6.4 Hangers

Suspended ceiling runner channel hangers shall be soft, annealed steel wire not less than No. 8 SWG, conforming to ASTM A 853 or flat iron or steel straps, at least 3/32 x 7/8 inch size, coated with zinc, cadmium, or rust-inhibiting paint.

2.6.5 Wire and Clip Type Fastenings

Tie wire, clips, rings, and other fastenings shall be corrosion-resisting steel conforming to ASTM A 580, composition 302, 304, or 316, Condition A, or nickel-copper alloy conforming to ASTM B 164, annealed condition except that walls, partitions, and other vertical surfaces not incorporated in ceiling construction may be erected with soft, annealed steel conforming to ASTM A 853.

2.6.5.1 Tie Wire

Tie wire for constructing partitions and vertical furring, for securing metal lath to supports, and for lacing shall be not less than No. 18 SWG. Tie wire for other applications shall be not less than No. 16 SWG.

2.6.5.2 Clips

Clips used in lieu of tie wire for securing the furring channels to the runner channels in ceiling construction shall be made from strip not less than \1/8 inch~\ thick or shall be hairpin clip, formed of wire not less than 0.01620 inch nominal diameter. Other clips and rings or fastenings of similar materials shall be equivalent in holding power to that provided by tie wire for the specific application.

3 EXECUTION

3.1 INTERIOR WALL FRAMING

Steel framing and furring members shall be installed in accordance with ASTM C 754. Members shall be in alignment with spacings not to exceed the maximum spacings indicated on drawings. Runners shall be aligned accurately at the floor and ceiling and securely anchored.

3.1.1 Wall Openings

The framing system shall provide for the installation and anchorage of the required subframes or finish frames for wall openings at doors, pass-through openings, and access panels. Partitions abutting continuous suspended ceilings shall be strengthened for rigidity at rough openings of more than 30 inches wide. Studs at openings shall be 0.0329 in minimum bare metal thickness and spot grouted at jamb anchor inserts. Double studs shall be fastened together with screws and secured to floor and overhead runners. Two studs placed back-to-back shall be used for framing solid-core doors, doors over 36 inches wide and extra-heavy doors such as X-ray room doors.

3.1.2 Wall Control Joints

Control joints for expansion and contraction in the walls shall be constructed with double studs installed 1/2 inch apart in interior walls or wall furrings. Control joint spacing shall not exceed 30 feet. Ceiling-height door frames may be used as vertical control joints. Door frames of less than ceiling height may be used as control joints only if standard control joints extend to ceiling from both corners of top of door frame. Control joints between studs shall be filled with firesafing insulation in fire rated partitions.

3.2 SHAFT WALL FRAMING

The shaft wall system shall be installed in accordance with the system manufacturer's published instructions. Bucks, anchors, blocking and other items placed in or behind shaft wall framing shall be coordinated with electrical and mechanical work. Fireproofing materials which are damaged or removed during shaft wall construction shall be patched or replaced.

3.3 SUSPENDED CEILING FRAMING

Suspended ceiling system framing shall be installed in accordance with ASTM C 754.

3.3.1 Hangers

Hangers shall be spaced not more than 48 inches along runner channels and 36 inches in the other direction or 42 inches in both directions unless otherwise indicated. Locations of hanger wires shall be coordinated with other work. Hangers at ends of runner channels shall be located not more than 6 inches from wall. Hanger wire shall be looped around bottom chord of open-web steel joists, or secured to structural elements with suitable fasteners. Sags or twists which develop in the suspended system shall be adjusted. Damaged or faulty parts shall be replaced.

3.3.2 Main Runners

Main runner channels shall be installed in accordance with ASTM C 754. Hanger wires shall be double strand saddle-tied to runner channels and the ends of hanger wire shall be twisted three times around itself. Main runners shall be located to within 6 inches of the paralleling wall to support the ends of cross furring. Main runners shall not come in contact with abutting masonry or concrete walls. Where main runners are spliced, ends shall be overlapped 12 inches with flanges of channels interlocked, and shall be securely tied at each end of splice with wire looped twice around the channels.

3.3.3 Furring Channels

Furring channels shall be spaced in accordance with ASTM C 754. Furring channels shall be secured to the runner channels and to structural supports at each crossing with tie wire, hairpin clips, or equivalent fastenings. Furring channels shall be located within 2 inches of parallel walls and beams, and shall be cut 1/2 inch short of abutting walls.

3.3.4 Ceiling Openings

Support members shall be provided as required at ceiling openings for access panels, recessed light fixtures, and air supply or exhaust. Support members shall be not less than 1-1/2 inch main runner channels and vertically installed suspension wires or straps shall be located to provide at least the minimum support specified herein for furring and wallboard attachment. Intermediate structural members not a part of the structural system, shall be provided for attachment or suspension of support members.

3.3.5 Light Fixtures

Light fixtures shall not be supported directly from suspended ceiling runners. Hanger wires for recessed or surface mounted light fixtures shall be anchored to structure at four corners of light fixtures, and additional wires shall be provided at appropriate locations to carry the weight of light fixtures.

3.3.6 Control Joints

A control joint or intermediate blocking shall be installed where ceiling framing members change direction.

3.3.6.1 Interior Ceilings With Perimeter Relief

Control joints shall be installed so that linear dimensions between control joints shall not exceed 50 feet in either direction nor more than 2500 square feet.

3.3.6.2 Interior Ceilings Without Perimeter Relief

Control joints shall be installed so that linear dimensions between control joints shall not exceed 30 feet in either direction nor more than 900 square feet.

3.4 APPLICATION OF GYPSUM BOARD

Gypsum board shall be installed in accordance with ASTM C 840 and GA 216 and as specified. Edges and ends of gypsum boards shall be cut to obtain neat fitting joints. End joints of adjoining boards shall be staggered, and shall be staggered on opposite sides of wall. Boards shall be applied with moderate contact without forcing in place. Holes for pipes, fixtures or other small openings shall be cut with a tool which will provide a neat fit. Screws shall be driven so that the heads are slightly below the plane of paper face. Fracturing the paper face or damaging the core shall be avoided. Trim shall be installed at external and internal angles formed by the intersecting gypsum board surfaces with other surfaces. Corner beads shall be installed to vertical and horizontal corners in accordance with manufacturer's published instructions.

3.4.1 Two-Ply Gypsum Board

Second layer of gypsum board shall be applied perpendicular to first layer with joints staggered and secured with mechanical fasteners.

3.4.2 Backing Board

Gypsum board used as a substrate to receive wall panels shall be in accordance with ASTM C 840, System X.

3.5 TRIM, MOLDINGS, AND ACCESSORIES INSTALLATION

Trim, moldings and accessories shall be installed in accordance with GA 216.

3.6 TAPING AND FINISHING

Gypsum board taping and finishing shall be performed in accordance with ASTM C 840. Boards shall be kept free of dirt, oil and other foreign matter that could cause a lack of bond. Screw heads, dents, gouges, and cut-outs shall be filled with joint compound and sanded. Accessories at exposed joints, edges, corners, openings, and similar locations shall be taped, floated with joint compound, and sanded to produce surfaces ready for gypsum board finishes.

3.7 FIRE-RESISTANT ASSEMBLIES

Gypsum wallboard construction for fire-rated assemblies shall be in accordance with UL-05, or GA 600 for the rating indicated on drawings.

3.8 PATCHING

Surface defects and damage shall be corrected as required to leave gypsum board smooth, uniform in appearance, and ready to receive finish as specified.

END OF SECTION

SECTION 09310

CERAMIC TILE

1 GENERAL

1.1 REFERENCES

The publications listed below form a part of this specification to the extent referenced. The publications are referred to in the text by basic designation only.

AMERICANS WITH DISABILITIES ACT (ADA)

ADA	(1991) Americans with Disabilities Act Guidelines for Building and Facilities

AMERICAN NATIONAL STANDARDS INSTITUTE (ANSI)

ANSI A108.1A	(1992) Installation of Ceramic Tile in the Wet-Set Method, with Portland Cement Mortar
ANSI A108.1B	(1992) Installation of Ceramic Tile on a Cured Portland Cement Mortar Setting Bed with Dry-Set or Latex Portland Cement Mortar
ANSI A108.4	(1992) Installation of Ceramic Tile with Organic Adhesives or Water Cleanable Tile Setting Epoxy Adhesive
ANSI A108.5	(1992) Installation of Ceramic Tile with Dry-Set Portland Cement Mortar or Latex-Portland Cement Mortar
ANSI A108.6	(1992) Installation of Ceramic Tile with Chemical Resistant, Water Cleanable Tile-Setting and Grouting Epoxy
ANSI A108.7	(1992) Electrically Conductive Ceramic Tile Installed with Conductive Dry-Set Portland Cement Mortar
ANSI A108.8	(1992) Installation of Ceramic Tile with Chemical Resistant Furan Mortar and Grout
ANSI A108.10	(1992) Installation of Grout in Tilework
ANSI A108.11	(1992) Interior Installation of Cementitious Backup Units
ANSI A118.1	(1992) Dry-Set Portland Cement Mortar
ANSI A118.2	(1992) Conductive Dry-Set Portland Cement Mortar

ANSI A118.3	(1992) Chemical Resistant, Water Cleanable Tile Setting and Grouting Epoxy and Water Cleanable Tile Setting Epoxy Adhesive
ANSI A118.4	(1992) Latex-Portland Cement Mortar
ANSI A118.5	(1992) Chemical Resistant Furan Mortars and Grouts for Tile
ANSI A118.6	(1992) Ceramic Tile Grouts
ANSI A118.9	(1992) Test Methods and Specifications for Cementitious Backer Units
ANSI A136.1	(1992) Organic Adhesives for Installation of Ceramic Tile
ANSI A137.1	(1988) Ceramic Tile

AMERICAN SOCIETY FOR TESTING AND MATERIALS (ASTM)

ASTM A 185	(1990a) Steel Welded Wire Fabric, Plain, for Concrete Reinforcement
ASTM C 33	(1992a) Concrete Aggregates
ASTM C 144	(1993) Aggregate for Masonry Mortar
ASTM C 150	(1992) Portland Cement
ASTM C 206	(1984; R 1992) Finishing Hydrated Lime
ASTM C 207	(1991; R 1992) Hydrated Lime for Masonry Purposes
ASTM C 241	(1990) Abrasion Resistance of Stone Subjected to Foot Traffic
ASTM C 373	(1988; R 1994) Water Absorption, Bulk Density, Apparent Porosity, and Apparent Specific Gravity of Fired Whiteware Products
ASTM C 648	(1984; R 1989) Breaking Strength of Ceramic Tile
ASTM C 847	(1988; R 1992) Metal Lath
ASTM C 1026	(1987; R 1992) Measuring Frost Resistance of Ceramic Tile to Freeze-Thaw Cycling
ASTM C 1027	(1984; R 1990) Determining Visible Abrasion Resistance of Glazed Ceramic Tile
ASTM C 1028	(1989) Determining the Static Coefficient of Friction of Ceramic Tile and Other Like Surfaces by the Horizontal Dynamometer Pull-Meter Method

MARBLE INSTITUTE OF AMERICA (MIA)

MIA-01 (1991) Design Manual IV Dimensional Stone

NATIONAL FIRE PROTECTION ASSOCIATION (NFPA)

NFPA 99 (1993) Health Care Facilities

TILE COUNCIL OF AMERICA (TCA)

TCA-01 (1996) Handbook for Ceramic Tile Installation

1.2 SUBMITTALS

Government approval is required for submittals with a "GA" designation; submittals having an "FIO" designation are for information only. The following shall be submitted in accordance with Section 01330 SUBMITTAL PROCEDURES:

SD-01 Data

Tile; FIO. Mortar, Grout, and Adhesive; FIO.

Manufacturer's catalog data.

SD-06 Instructions

Tile; FIO. Mortar and Grout; FIO

Manufacturer's catalog data.

SD-13 Certificates

Tile; FIO. Mortar, Grout and Adhesive; FIO

Certificates indicating conformance with specified requirements. A master grade certificate shall be furnished for tile.

SD-14 Samples

Tile; GA. Accessories; GA. Marble Thresholds; GA.

Samples of sufficient size to show color range, pattern, type and joints.

1.3 DELIVERY AND STORAGE

Materials shall be delivered to the project site in manufacturer's original unopened containers with seals unbroken and labels and hallmarks intact. Materials shall be kept dry, protected from weather, and stored under cover.

1.4 ENVIRONMENTAL REQUIREMENTS

Ceramic tile work shall not be performed unless substrate and the ambient temperature is at least 50 degrees F and rising. Temperature shall be maintained above 50 degrees F while the work is being performed and for at least 7 days after completion of the work. When temporary heaters are used

they shall be vented to the outside to avoid carbon dioxide damage to new tilework.

1.5 WARRANTY

Manufacturers standard performance guarantees or warranties that extend beyond a 1-year period shall be provided.

2 PRODUCTS

2.1 TILE

Tile shall be grade as indicated conforming to ANSI A137.1. Containers shall be grade sealed. Seals shall be marked to correspond with the marks on the signed master grade certificate. Tile shall be impact resistant with a minimum breaking strength for wall tile of 90 lbs and 250 lbs for floor tile in accordance with ASTM C 648. Water absorption shall be 0.5 maximum percent in accordance with ASTM C 373. Floor tile shall have a minimum static coefficient of friction of 0.5 in accordance with ASTM C 1028. Tile shall be Class III as rated by the manufacturer when tested in accordance with ASTM C 1027 for abrasion resistance as related to foot traffic.

2.1.1 Mosaic Floor Tile (CT-2)

Ceramic mosaic floor tile and trim shall be inpervious porcelain, less than 0.5% absorption, stain proof, frost proof, unglazed, unpolished, abrasive grain with sharply formed face. Tile size shall be 2 by 2 inches.

2.1.2 Paver Tile (CT-1)

Paver tile and trim shall be unpolished, impervious porcelain, less than 0.5% absorption, stain resistant, frost proof, with smooth surface. Tile shall be 12 by 12 by 5/16 inches. Color and pattern shall be as indicated.

2.1.3 Glazed Wall Tile (CT-3, CT-4, CT-5)

Glazed wall tile and trim shall be cushion edged with satin glaze for CT-3 and high gloss glaze for CT-4 and CT-5. Tile shall be 4-1/4 by 4-1/4 inches. Color shall be as indicated.

2.2 #.1 SETTING-BED

The setting-bed shall be composed of the following:

2.3 #.1 AGGREGATE FOR CONCRETE FILL

Aggregate shall conform to ASTM C 33. Maximum size of coarse aggregate shall not be greater than one-half the thickness of concrete fill.

2.4 #.1 PORTLAND CEMENT

Cement shall conform to ASTM C 150, Type I, white for wall mortar and gray for other uses.

2.5 #.1 SAND

Sand shall conform to ASTM C 144.

2.6 #.1 HYDRATED LIME

Hydrated lime shall conform to ASTM C 206, Type S or ASTM C 207, Type S.

2.7 #.1 METAL LATH

Metal lath shall be flat expanded type conforming to ASTM C 847, and weighing not less than 2.5 pounds per square yard.

2.8 #.1 REINFORCING WIRE FABRIC

Wire fabric shall conform to ASTM A 185. Wire shall be either 2 x 2 inch mesh, 16/16 wire or 1-1/2 x 2 inch mesh, 16/13 wire.

2.9 WATER

Water shall be potable.

2.10 MORTAR, GROUT, AND ADHESIVE

Mortar, grout, and adhesive shall conform to the following:

2.10.1 Latex-Portland Cement Mortar

ANSI A118.4.

2.10.2 Ceramic Tile Grout

ANSI A118.6; latex-portland cement grout.

2.10.3 Organic Adhesive

ANSI A136.1, Type I.

2.11 #.1 EPOXY RESIN GROUT

ANSI A118.3

2.11.1 Cementitious Backer Board

Cementitious backer units shall comply with ANSI A118.9.

2.12 MARBLE THRESHOLDS

Marble thresholds shall be of size required by drawings or conditions. Marble shall be Group A as classified by the MIA-01. Marble shall have a fine-sand-rubbed finish and shall be gray in color as approved by the Contracting Officer. Marble abrasion shall be not less than 12.0 when tested in accordance with ASTM C 241. Thresholds shall comply with the ADA.

3 EXECUTION

3.1 PREPARATORY WORK AND WORKMANSHIP

Surface to receive tile shall be inspected and shall conform to the requirements of ANSI A108.1B for surface conditions for the type setting bed

specified and for workmanship. Variations of surface to be tiled shall fall within maximum values shown below:

TYPE	WALLS	FLOORS
Organic Adhesives	1/8 inch in 8 ft.	
Latex portland cement mortar	1/8 inch in 8 ft.	1/8 inch in 10 ft.
Epoxy	1/8 inch in 8 ft.	1/8 inch in 10 ft.

3.2 GENERAL INSTALLATION REQUIREMENTS

Tile work shall not be started until roughing in for mechanical and electrical work has been completed and tested, and built-in items requiring membrane waterproofing have been installed and tested. Floor tile installation shall not be started in spaces requiring wall tile until after wall tile has been installed. Tile in colors and patterns indicated shall be applied in the area shown on the drawings. Tile shall be installed with the respective surfaces in true even planes to the elevations and grades shown. Special shapes shall be provided as required for sills, jambs, recesses, offsets, external corners, and other conditions to provide a complete and neatly finished installation. Tile bases and coves shall be solidly backed with mortar.

3.3 INSTALLATION OF WALL TILE

Wall tile shall be installed in accordance with the TCA-01, method W244-93 in shower (wet areas) and at contractors option W223-93 for dry areas.

3.3.1 Latex-Portland Cement Mortar

Latex-portland cement shall be used to install tile in accordance with ANSI A108.5. Latex portland cement shall be used when installing porcelain ceramic tile.

3.3.2 Organic Adhesive

Organic adhesive installation of ceramic tile shall conform to ANSI A108.4.

3.4 INSTALLATION OF FLOOR TILE

Floor tile shall be installed in accordance with TCA-01, method F-113-96 and method F-112-96 (at dressing area adjacent to showers). Terazzo shower receptors shall be installed in accordance with manufacturer's recommendations.

3.5 #.1 WORKABLE OR CURED MORTAR BED

Floor tile shall be installed over a workable mortar bed or a cured mortar bed at the option of the Contractor. Workable mortar bed materials and installation shall conform to ANSI A108.1A. Cured mortar bed and materials shall conform to ANSI A108.1B. Joints between paver tile shall be between 1/4 inch and 3/8 inch in width and shall be uniform in width.

3.5.1 Latex-Portland Cement

Latex-portland cement mortar shall be used to install tile directly over properly cured, plane, clean concrete slabs in accordance with ANSI A108.5.

Latex portland cement shall be used when installing porcelain ceramic tile and terazzo shower receptors.

3.6 #.1 RESINOUS GROUT

Floor tile shall be grouted with epoxy resin grout. Joints shall be raked and cleaned to the full depth of the tile and neutralized when recommended by the resin manufacturer. Epoxy resin grout shall be installed in conformance with ANSI A108.6. Installation of resin grout shall be in strict accordance with manufacturer's instructions for proportioning, mixing, installing, and curing. Recommended temperature shall be maintained in the area and on the surface to be grouted. After grouting, tile shall be left free of grout stain.

3.6.1 Ceramic Tile Grout

Ceramic Tile grout shall be prepared and installed in accordance with ANSI A108.10.

3.6.2 Cementitious Backer Board

Cementitious backer units shall be installed in accordance with ANSI A108.11. Fasteners shall be type designed for cement board application.

3.7 INSTALLATION OF MARBLE THRESHOLDS

Thresholds shall be installed where indicated in a manner similar to that of the ceramic tile floor. Thresholds shall be the full width of the opening. Head joints at ends shall not exceed 1/4 inch in width and shall be grouted full as specified for ceramic tile.

3.8 CONTROL JOINTS

Joints shall be formed as indicated and sealed as specified in Section 07920 JOINT SEALING.

3.8.1 Walls

Control joints shall be provided at control joints in backing material. Wherever backing material changes, a control joint shall be formed to separate the different materials.

3.8.2 Floors

Control joints shall be provided over construction joints, control joints, and expansion joints in concrete slabs. Control joints shall also be provided where tile abuts restraining surfaces such as perimeter walls, curbs and columns and at intervals of 24 to 36 feeteach way in large interior floor areas and 12 to 16 feet each way in large exterior areas or areas exposed to direct sunlight or moisture. Expansion joints shall extend through setting-beds and fill.

3.9 CLEANING AND PROTECTING

Upon completion, tile surfaces shall be thoroughly cleaned in accordance with manufacturer's approved cleaning instructions. Acid shall not be used for cleaning glazed tile. After the grout has set, tile wall surfaces shall

be given a protective coat of a noncorrosive soap or other approved method of protection. Tiled floor areas shall be covered with building paper before foot traffic is permitted over the finished tile floors. Board walkways shall be laid on tiled floors that are to be continuously used as passageways by workmen. Damaged or defective tiles shall be replaced.

END OF SECTION

SECTION 09510

ACOUSTICAL CEILINGS

1 GENERAL

1.1 REFERENCES

The publications listed below form a part of this specification to the extent referenced. The publications are referred to in the text by basic designation only.

AMERICAN SOCIETY FOR TESTING AND MATERIALS (ASTM)

ASTM C 635	(1995) Manufacture performance, and Testing of Metal Suspension Systems for Acoustical Tile and Lay-In Panel Ceilings
ASTM C 636	(1992) Installation of Metal Ceiling Suspension Systems for Acoustical Tile and Lay-In Panels
ASTM E 90	(1990) Laboratory Measurement of Airborne Sound Transmission Loss of Building Partitions
ASTM E 119	(1988) Fire Tests of Building Construction and Materials
ASTM E 413	(1987) Rating Sound Insulation
ASTM E 580	(1996) Application of Ceiling Suspension Systems for Acoustical Tile and Lay-In Panels in Areas Requiring Seismic Restraint
ASTM E 1264	(1990) Standard Classification for Acoustical Ceiling Products
ASTM E 1414	(1991a) Standard Test for Airborne Sound Attenuation Between Rooms Sharing a Common Ceiling Plenum

CEILINGS AND INTERIOR SYSTEMS CONSTRUCTION ASSOCIATION (CISCA)

CISCA-02	(1984) Ceiling Sound Transmission Test by Two-Room Method

UNDERWRITERS LABORATORIES (UL)

UL-05	(1996) Fire Resistance Directory

1.2 GENERAL REQUIREMENTS

Acoustical treatment shall consist of sound controlling units mechanically mounted on a suspended ceiling system. The unit size, texture, finish, and

color shall be as specified herein. The location and extent of acoustical treatment shall be as shown on the drawings.

1.3 SUBMITTALS

Government approval is required for submittals with a "GA" designation; submittals having an "FIO" designation are for information only. The following shall be submitted in accordance with Section 01330 SUBMITTAL PROCEDURES:

SD-01 Data

Acoustical Ceiling System; FIO.

Manufacturer's descriptive data and installation instructions.

SD-04 Drawings

Acoustical Ceiling System; GA.

Drawings shall show suspension system, method of anchoring and fastening, and reflected ceiling plan.

SD-13 Certificates

Ceiling Sound Transmission Class and Test; FIO.

Test reports by an independent testing laboratory attesting that acoustical ceiling systems meet specified fire endurance and sound transmission requirements. Data attesting to conformance of the proposed system to Underwriters Laboratories, Inc. requirements for the fire endurance rating listed in UL-05 may be submitted in lieu of test reports.

SD-14 Samples

Acoustical Units; FIO.

Two samples of each type of acoustical unit showing texture, finish, and color.

1.4 DELIVERY AND STORAGE

Materials shall be delivered to the site in the manufacturer's original unopened containers with brand name and type clearly marked. Materials shall be carefully handled and stored in dry, watertight enclosures. Immediately before installation, acoustical units shall be stored for not less than 24 hours at the same temperature and relative humidity as the space where they will be installed to assure temperature and moisture conditions.

1.5 ENVIRONMENTAL REQUIREMENTS

A uniform temperature of not less than 60 degrees Fnor more than 80 degrees F and a relative humidity of not more than 70 percent shall be maintained before, during, and after installation of acoustical units.

1.1 SCHEDULING

Interior finish work such as plastering, concrete and terrazzo work shall be complete and dry before installation. Mechanical, electrical, and other work above the ceiling line shall be completed and heating, ventilating, and air conditioning systems shall be installed and operating in order to maintain temperature and humidity requirements.

1.2 #.1 WARRANTY

Manufacturer's standard performance guarantees or warrantees that extend beyond a one year period shall be provided.

1.3 #.1 EXTRA MATERIALS

Spare tiles of each color shall be furnished at the rate of 5 tiles for each 1000 tiles installed. Tiles shall be from the same lot as those installed.

2 PRODUCTS

2.1 ACOUSTICAL UNITS

Acoustical units shall conform to ASTM E 1264, Class A, and the following requirements:

2.1.1 Units for Exposed-Grid System

Type: III
Minimum NRC grade: 0.55 minimum when tested on mounting No. E-400.
Pattern: D.
Nominal size: 24 inches by 24 inches.
Edge detail: ~~Trimmed and butt~~ Square reveal.
Finish: Factory-applied standard finish.
Minimum LR coefficient: 0.70.
Minimum CAC: 40-44.

2.2 SUSPENSION SYSTEM

Suspension system shall be standard exposed-grid and shall conform to ASTM C 635 for intermediate-duty systems. Surfaces exposed to view shall be aluminum or steel with a factory-applied white baked-enamel finish. Wall molding shall have a flange of not less than 15/16 inch and shall be provided with outside corner caps. Inside corner caps shall be provided where, due to the configuration of the installation, they are needed to produce a workmanlike appearance.

2.3 HANGERS

Hangers shall be galvanized steel wire. Hangers and attachment shall support a minimum 300 pound ultimate vertical load without failure of supporting material or attachment.

2.4 ACCESS PANELS

Access panels shall match adjacent acoustical units and shall be designed and equipped with suitable framing and fastenings for removal and replacement without damage. Panel shall be not less than 12 by 12 inches or

more than 12 by 24 inches. An identification plate of 0.032-inch thick aluminum, 3/4 inch in diameter, stamped with the letters "AP" and finished the same as the unit, shall be attached near one corner on the face of each access panel.

2.1 #.1 FINISHES

Acoustical units and suspension system members shall have manufacturer's standard textures, patterns and finishes as specified. Ceiling suspension system components shall be treated to inhibit corrosion.

2.2 #.1 CEILING ATTENUATION CLASS AND TEST

Ceiling attenuation class (CAC) range of acoustical units, when required, shall be determined in accordance with ASTM E 1414. Test ceiling shall be continuous at the partition and shall be assembled in the suspension system in the same manner that the ceiling will be installed on the project. System shall be tested with all acoustical units installed.

3 EXECUTION

3.1 INSTALLATION

Acoustical work shall be provided complete with all necessary fastenings, clips, and other accessories required for a complete installation. Mechanical fastenings shall not be exposed in the finished work. Hangers shall be laid out for each individual room or space. Hangers shall be placed to support framing around beams, ducts, columns, grilles, and other penetrations through ceilings. Main runners and carrying channels shall be kept clear of abutting walls and partitions. At least two main runners shall be provided for each ceiling span. Wherever required to bypass an object with the hanger wires, a sub suspension system shall be installed, so that all hanger wires will be plumb. Splayed hanger wires may be used if an opposite counter splayed wire of the same angle as the first wire is installed and attached to the same supporting member.

3.1.1 Suspension System

Suspension system shall be installed in accordance with ASTM C 636 and as specified herein. There shall be no hanger wires or other loads suspended from underside of steel decking.

3.1.1.1 Plumb Hangers

Hangers shall be plumb and shall not press against insulation covering ducts and pipes.

3.1.1.2 Splayed Hangers

Where hangers must be splayed (sloped or slanted) around obstructions, offset the resulting horizontal force by bracing, counter splaying, or other acceptable means.

3.1.2 Wall Molding

Wall molding shall be provided where ceilings abut vertical surfaces. Wall molding shall be secured not more than 3 inches from ends of each length and

not more than 16 inches on centers between end fastenings. Wall molding springs shall be provided at each acoustical unit in semi exposed or concealed systems.

3.1.3 Acoustical Units

Acoustical units shall be installed in accordance with the approved installation instructions of the manufacturer. Edges of acoustical units shall be in close contact with metal supports, with each other, and in true alignment. Acoustical units shall be arranged so that units less than one-half width are minimized. Units in exposed-grid system shall be held in place with manufacturer's standard hold-down clips, if units weigh less than 1 psf.

3.2 CEILING ACCESS PANELS

Ceiling access panels shall be located directly under the items to which access is required.

3.3 CLEANING

Following installation, dirty or discolored surfaces of acoustical units shall be cleaned and left free from defects. Units that are damaged or improperly installed shall be removed and new units provided as directed.

END OF SECTION

SECTION 09650

RESILIENT FLOORING AND MATS

1 GENERAL

1.1 REFERENCES

The publications listed below form a part of this specification to the extent referenced. The publications are referred to in the text by basic designation only.

AMERICAN SOCIETY FOR TESTING AND MATERIALS (ASTM)

ASTM D 2240	(1997) Rubber Property - Durometer Hardness
ASTM D 4078	(1992; R 1996) Water Emulsion Floor Polish
ASTM F 1066	(1995a) Vinyl Composition Floor Tile
ASTM F 1303	(1990) Sheet Vinyl Floor Covering with Backing
ASTM F-1344	(1991) Rubber Floor Tile

FEDERAL SPECIFICATIONS (FS)

FS L-F-475	(Rev A; Am 1; Int Am 3) Floor Covering Vinyl, Surface (Tile and Roll), with Backing
FS L-F-001641	(Basic; Am 2) Floor Covering Translucent or Transparent Vinyl Surface with Backing
FS P-F-430	(Rev C; Am 1) Finish, Floor, Water-Emulsion (For Use on Light Colored Floors)
FS P-W-155	(Rev C; Int Am 1) Wax, Floor, Water-Emulsion
FS RR-T-650	(Rev D) Treads, Metallic and Nonmetallic, Skid Resistant
FS SS-T-312	(Rev B; Int Am 1; Notice 1) Tile, Floor: Asphalt, Rubber, Vinyl Vinyl-Asbestos
FS SS-W-40	(Rev A; Int Am 1; Notice 1) Wall Base: Rubber, and Vinyl Plastic

1.2 SUBMITTALS

Government approval is required for submittals with a "GA" designation; submittals having an "FIO" designation are for information only. The following shall be submitted in accordance with Section 01330 SUBMITTAL PROCEDURES:

SD-01 Data

Resilient Flooring and Accessories; FIO.

Manufacturer's descriptive data and installation instructions. Cleaning and maintenance instructions shall be included.

SD-09 Reports

Resilient Flooring and Accessories; FIO.

Copies of test reports showing that representative product samples of the flooring proposed for use have been tested by an independent testing laboratory within the past year and conform to the requirements specified.

SD-14 Samples

Resilient Flooring and Accessories; GA.

Three samples of each indicated color and type of flooring and base. Sample size shall be minimum 3 inches by 5 inches.

Mats; GA.

Sample of mat and color. Sample size shall be minimum 3 inches by 5 inches.

1.3 DELIVERY AND STORAGE

Materials shall be delivered to the building site in original unopened containers, shall be stored in a clean dry area with temperature maintained above 70 degrees F for 2 days prior to installation, and shall be stacked according to manufacturer's recommendations.

1.4 ENVIRONMENTAL REQUIREMENTS

Areas to receive resilient flooring shall be maintained at a temperature above 70 degrees F for 2 days before application, during application and 2 days after application. A minimum temperature of 55 degrees F shall be maintained thereafter.

1.5 SCHEDULING

Resilient flooring application shall be scheduled after the completion of other work which would damage the finished surface of the flooring.

1.6 #.1 WARRANTY

Manufacturer's standard performance guarantees or warranties that extend beyond a one year period shall be provided.

1.7 EXTRA MATERIALS

Extra flooring material of each color and pattern shall be furnished at the rate of 5 tiles for each 1000 tiles. Extra materials shall be from the same lot as those installed. Extra base material composed of 20 linear feet of each color shall be furnished.

2 PRODUCTS

2.1 VINYL-COMPOSITION TILE

Vinyl-composition tile shall conform to ASTM F 1066, Composition 1, asbestos-free, and shall be 12 inches square and 1/8 inch thick. Tile shall have the color and pattern uniformly distributed throughout the thickness of the tile. Flooring in any one continuous area shall be from the same lot and shall have the same shade and pattern. Color and pattern shall be as indicated.

2.2 RESILIENT BASE

Base shall conform to FS SS-W-40, Type I (rubber) or Type II (vinyl). Style A, (straight)-installed with carpet. Style B, (coved)-installed with resilient flooring. Butt toe (cove)-installed with 1/8 inchthick flooring. Base shall be 4 inches high and a minimum 1/8 inch thick. Job Formed corners shall be furnished. Color shall be as indicated.

2.3 #.1 TRANSITION STRIP

A vinyl or rubber transition strip tapered to meet abutting material shall be provided.

2.4 EDGE STRIP

Edge strip shall be vinyl, 1 inch wide, and of thickness to match the flooring. Color shall match wall base color unless otherwise indicated.

2.5 ADHESIVE

Adhesive for flooring and wall base shall be as recommended by the flooring manufacturer.

2.6 POLISH

Polish shall conform to ASTM D 4078.

2.7 ANTI-FATIGUE MATS

Anti-fatigue mats shall be smooth rubber, 1/2 inch to 3/8 inch thick with bevelled edges. See drawings for size and locations.

2.8 #.1 SPORT MAT

Sport mat shall be rubber granules / rubber fibers bounded together with polyurethane binder, 3/8 inch thick, 37 inches by 37 inches interlocking tiles.

2.9 #.1 EXERCISE MAT

Exercise mat shall be 1 1/4 inches foam fill covered with 14 ounces vinyl. Size as indicated.

2.10 #.1 STAIR RISER

Stair riser, where indicated, shall conform to composition rubber compounded from a mixture of synthetic and reclaimed rubber. Durometer hardness shall be 90, plus or minus 5, when tested in accordance with ASTM D 2240. Stair riser shall be coved.

3 EXECUTION

3.1 EXAMINATION/VERIFICATION OF CONDITIONS

The Contractor shall verify that site conditions are in agreement with the design package and shall report all conditions that will prevent a proper installation. The Contractor shall not take any corrective action without written permission from the Government.

3.2 SURFACE PREPARATION

Flooring shall be in a true, level plane, except where indicated as sloped. Before any work under this section is begun, all defects such as rough or scaling concrete, low spots, high spots, and uneven surfaces shall have been corrected, and all damaged portions of concrete slabs shall have been repaired as recommended by the flooring manufacturer. Concrete curing compounds, other than the type that does not adversely affect adhesion, shall be entirely removed from the slabs.

3.3 MOISTURE TEST

The suitability of the concrete subfloor for receiving the resilient flooring with regard to moisture content shall be determined by a moisture test as recommended by the flooring manufacturer.

3.4 INSTALLATION OF VINYL-COMPOSITION TILE

Tile flooring shall be installed with adhesive in accordance with the manufacturer's installation instructions. Tile lines and joints shall be kept square, symmetrical, tight, and even. Each floor shall be in a true, level plane, except where indicated as sloped. Edge width shall vary as necessary to maintain full-size tiles in the field, but no edge tile shall be less than one-half the field tile size, except where irregular shaped rooms make it impossible. Flooring shall be cut to, and fitted around, all permanent fixtures, built-in furniture and cabinets, pipes, and outlets. Edge tile shall be cut, fitted, and scribed to walls and partitions after field flooring has been applied.

3.5 INSTALLATION OF EDGE STRIPS

Edge strips shall be secured with adhesive as recommended by the manufacturer. Edge strips shall be provided at locations where flooring termination is higher than the adjacent finished flooring, except at doorways where thresholds are provided.

3.6 INSTALLATION OF RESILIENT BASE

Wall base shall be installed with adhesive in accordance with the manufacturer's instructions. Base joints shall be tight and base shall be even with adjacent resilient flooring.

3.7 CLEANING

Immediately upon completion of installation of tile in a room or an area, flooring and adjacent surfaces shall be cleaned to remove all surplus adhesive. No sooner than 5 days after installation, flooring shall be washed with a nonalkaline cleaning solution, rinsed thoroughly with clear cold water, and, except for raised pattern flooring and static control vinyl tile, given two coats of polish. After each polish coat, floors shall be buffed to an even luster with an electric polishing machine.

3.8 PROTECTION

From the time of laying until acceptance, flooring shall be protected from damage. Flooring which becomes damaged, loose, broken, or curled shall be removed and replaced.

3.9 #.1 SPORT MAT

Sport mat shall be installed with adhesive in accordance with the manufacturer's written installation instructions.

3.10 #.1 INSTALLATION OF RISERS

Stair risers shall be installed with adhesive in accordance with the manufacturer's written installation instructions. Risers as shall cover the full width of the stairs.

END OF SECTION

SECTION 09680

CARPET

1 GENERAL

1.1 REFERENCES

The publications listed below form a part of this specification to the extent referenced. The publications are referred to in the text by basic designation only.

AMERICAN ASSOCIATION OF TEXTILE CHEMISTS AND COLORISTS (AATCC)

AATCC TM-16	(1993) Test Method: Colorfastness to Light
AATCC TM-134	(1991) Test Method: Electrostatic Propensity of Carpets
AATCC TM-165	(1993) Test Method: Colorfastness to Crocking: Carpets - AATCC Crockmeter Method
AATCC TM-174	(1993) Test Method: Antimicrobial Activity Assessment of Carpet

AMERICAN SOCIETY FOR TESTING AND MATERIALS (ASTM)

ASTM D 297	(1993) Rubber Products - Chemical Analysis
ASTM D 418	(1993) Pile Yarn Floor Covering Construction
ASTM D 1423	(1992) Twist in Yarns by the Direct Counting Method
ASTM D 1667	(1976; R 1990) Flexible Cellular Materials - Vinyl Chloride Polymers and Copolymers (Closed-Cell Foam)
ASTM D 3278	(1989) Test Methods for Flash Point of Liquids by Setaflash Closed-Cup Apparatus
ASTM D 3676	(1996) Rubber Cellular Cushion Used for Carpet or Rug Underlay
ASTM E 648	(1996a) Critical Radiant Flux of Floor-Covering Systems Using a Radiant Heat Energy Source

CARPET AND RUG INSTITUTE (CRI)

CRI 104	(1994) Commercial Carpet Installation Standard

CODE OF FEDERAL REGULATIONS (CFR)

16 CFR 1630	Standard for the Surface Flammability of Carpet and Rugs

GERMANY INSTITUTE FOR STANDARDIZATION (DEUTSCHES INSTITUTE FUR NORMUNG) (DIN)

DIN 54318	(1986) Machine-Made Textile Floor Coverings; Determination of Dimensional Changes Due to the Effects of Varied Water and Heat Conditions; Identical with ISO 2551 Edition 1981

1.2 SUBMITTALS

Government approval is required for submittals with a "GA" designation; submittals having an "FIO" designation are for information only. The following shall be submitted in accordance with Section 01330 SUBMITTAL PROCEDURES:

SD-01 Data

Carpet and Accessories; FIO.

Manufacturer's catalog data and printed documentation stating physical characteristics, durability, resistance to fading, and flame resistance characteristics for each type of carpet material and installation accessory.

SD-04 Drawings

Installation; GA.

Layout drawings indicating areas receiving carpet, carpet types, textures and patterns, direction of pile, location of seams, and locations of edge molding.

SD-06 Instructions

Carpet and Accessories; FIO.

Manufacturer's printed installation instructions for the carpet, including preparation of substrate, seaming techniques, and recommended adhesives and tapes.

SD-09 Reports

Moisture and Alkalinity Tests; GA.

Test reports of moisture and alkalinity content of concrete slab stating date of test, person conducting the test, and the area tested.

SD-13 Certificates

Carpet and Accessories; FIO.

Certificates of compliance from a laboratory accredited by the National Laboratory Accreditation Program of the National Institute of Standards and Technology attesting that each type of carpet and carpet with cushion material conforms to the standards specified.

SD-14 Samples

Carpet and Accessories; GA.

a. Carpet: Two "Production Quality" samples 27 x 18 inches of each carpet proposed for use, showing quality, pattern, and color specified.

b. Vinyl or Aluminum Moldings: Two pieces of each type at least 12 inches long.

c. Special Treatment Materials: Two samples showing system and installation method.

SD-19 Operation and Maintenance Manuals

Carpet and Accessories; FIO.

Three copies of carpet manufacturer's maintenance instructions describing recommended type of cleaning equipment and material, spotting and cleaning methods, and cleaning cycles.

1.3 REGULATORY REQUIREMENTS

Carpet and adhesives shall bear the Carpet and Rug Institute (CRI) Indoor Air Quality (IAQ) label. Carpet type bearing the label will indicate that the carpet has been tested and meets the criteria of the CRI IAQ Carpet Testing Program, and minimizes the impact on indoor air quality.

1.4 DELIVERY AND STORAGE

Materials shall be delivered to the site in the manufacturer's original wrappings and packages clearly labeled with the manufacturer's name, brand name, size, dye lot number, and related information. Materials shall be stored in a clean, dry, well ventilated area, protected from damage and soiling, and shall be maintained at a temperature above 60 degrees F for 2 days prior to installation.

1.5 ENVIRONMENTAL REQUIREMENTS

Areas in which carpeting is to be installed shall be maintained at a temperature above 60 degrees F for 2 days before installation, during installation, and for 2 days after installation. A minimum temperature of 55 degrees F shall be maintained thereafter for the duration of the contract. Traffic or movement of furniture or equipment in carpeted area shall not be permitted for 24 hours after installation. Other work which would damage the carpet shall be completed prior to installation of carpet.

1.6 WARRANTY

Manufacturer's standard performance guarantees or warranties that extend beyond a one-year period shall be provided.

1.7 EXTRA MATERIAL

Extra material from same dye lot consisting of full width continuous broadloom shall be provided for future maintenance. A minimum of 5 percent of total square yards of each carpet type, pattern, and color shall be provided.

2 PRODUCTS

2.1 CARPET TYPE CPT-1

Carpet shall be first quality; free of visual blemishes, streaks, poorly dyed areas, fuzzing of pile yarn, spots or stains, and other physical and manufacturing defects. Carpet materials and treatments shall be reasonably nonallergenic and free of other recognized health hazards. All grade carpets shall have a static control construction which gives adequate durability and performance.

2.1.1 Physical Characteristics

Carpet shall comply with the following:

a. Carpet Construction: Tufted.

b. Type: Broadloom 12 feet minimum usable carpet width.

c. Pile Type: Multilevel loop.

d. Pile Fiber: Commercial branded nylon continuous filament.

e. Pile or Wire Height: Minimum 0.125 inch in accordance with ASTM D 418.

f. Yarn Ply: Minimum 2 in accordance with ASTM D 1423.

g. Gauge or Pitch: Minimum 1/10 inch in accordance with ASTM D 418.

h. Stitches or Rows/Wires: Minimum 12 per square inch.

i. Finished Pile Yarn Weight: Minimum 34 ounces per square yard. This does not include weight of backings. Weight shall be determined in accordance with ASTM D 418.

j. Pile Density: Minimum 7.137.

k. Dye Method:

Yarn (or Skein) dyed and Space dyed.

l. Backing Materials: Primary backing materials shall be woven polypropylene. Secondary backing to suit project requirements shall be those customarily used and accepted by the trade for each type of carpet, except when a special unitary back designed for gluedown is provided.

2.1.2 Performance Requirements

a. Static Control: Static control shall be provided to permanently control static buildup to less than 3.5 kV when tested at 20 percent relative humidity and 70 degrees F in accordance with AATCC TM-134.

b. Flammability and Critical Radiant Flux Requirements: Carpet shall comply with 16 CFR 1630. Carpet in corridors and exits shall have a minimum average critical radiant flux of 0.22 watts per square centimeter when tested in accordance with ASTM E 648.

c. Tuft Bind: Tuft bind force required to pull a tuft or loop free from carpet backing shall be a minimum 9 pound average force for loop pile.

2.2 #.1 CARPET TYPE CPT-2

Carpet shall be first quality; free of visual blemishes, streaks, poorly dyed areas, fuzzing of pile yarn, spots or stains, and other physical and manufacturing defects. Carpet materials and treatments shall be reasonably nonallergenic and free of other recognized health hazards. All grade carpets shall have a static control construction which gives adequate durability and performance.

2.2.1 Physical Characteristics

Carpet shall comply with the following:

a. Carpet Construction: Tufted.

b. Type: Broadloom 12 feet minimum usable carpet width.

c. Pile Type: Multilevel loop-tip sheared.

d. Pile Fiber: Commercial branded nylon continuous filament.

e. Pile or Wire Height: Minimum 0.125 inch in accordance with ASTM D 418.

f. Yarn Ply: Minimum 2 in accordance with ASTM D 1423.

g. Gauge or Pitch: Minimum 1/10 inch in accordance with ASTM D 418.

h. Stitches or Rows/Wires: Minimum 9 per square inch.

i. Finished Pile Yarn Weight: Minimum 35.5 ounces per square yard. This does not include weight of backings. Weight shall be determined in accordance with ASTM D 418.

j. Pile Density: Minimum 7.452.

k. Dye Method: Yarn (or Skein) dyed and Space dyed.

l. Backing Materials: Primary backing materials shall be woven polypropylene. Secondary backing to suit project requirements shall be those customarily used and accepted by the trade for each

type of carpet, except when a special unitary back designed for gluedown is provided.

2.2.2 Performance Requirements

a. Static Control: Static control shall be provided to permanently control static buildup to less than 3.5 kV when tested at 20 percent relative humidity and 70 degrees F in accordance with AATCC TM-134.

b. Flammability and Critical Radiant Flux Requirements: Carpet shall comply with 16 CFR 1630. Carpet in corridors and exits shall have a minimum average critical radiant flux of 0.22 watts per square centimeter when tested in accordance with ASTM E 648.

c. Tuft Bind: Tuft bind force required to pull a tuft or loop free from carpet backing shall be a minimum 9 pound average force for loop pile.

2.3 ADHESIVES AND CONCRETE PRIMER

Adhesives and concrete primers for installation of carpet shall be waterproof, nonflammable, meet local air-quality standards, and shall be as recommended by the carpet manufacturer. Seam adhesive shall be waterproof, nonflammable, and nonstaining as recommended by the carpet manufacturer. Release adhesive for modular tile carpet shall be as recommended by the carpet manufacturer. Adhesives flashpoint shall be minimum 140 degrees F in accordance with ASTM D 3278.

2.4 MOLDING

Aluminum molding shall be a hammered surface, pinless clamp-down type, designed for the type of carpet being installed. Finish shall be natural color anodized. Floor flange shall be a minimum 1-1/2 inches wide and face shall be a minimum 5/8 inch wide.

2.5 TAPE

Tape for seams shall be as recommended by the carpet manufacturer for the type of seam used in installation.

2.6 COLOR, TEXTURE, AND PATTERN

Color, texture, and pattern shall be as indicated.

3 EXECUTION

3.1 SURFACE PREPARATION

Carpet shall not be installed on surfaces that are unsuitable and will prevent a proper installation. Holes, cracks, depressions, or rough areas shall be repaired using material recommended by the carpet or adhesive manufacturer. Floor shall be free of any foreign materials and swept broom clean. Before beginning work, subfloor shall be tested with glue and carpet to determine "open time" and bond.

3.2 MOISTURE AND ALKALINITY TEST

Concrete slab shall be tested for moisture content and excessive alkalinity in accordance with CRI 104. The moisture content shall not exceed a hygrometer reading of 65 percent.

3.3 PREPARATION OF CONCRETE SUBFLOOR

Installation of the carpeting shall not commence until concrete substrate is at least 90 days old. The concrete surfaces shall be prepared in accordance with instructions of the carpet manufacturer. Type of concrete sealer, when required, shall be compatible with the carpet.

3.4 INSTALLATION

Installation shall be in accordance with the manufacturer's instructions and CRI 104. Edges of carpet meeting hard surface flooring shall be protected with molding. Installation shall be in accordance with the molding manufacturer's instructions.

3.4.1 Broadloom Installation

Broadloom carpet shall be installed direct glue down and shall be smooth, uniform, and secure, with a minimum of seams. Seams shall be uniform, unnoticeable, and treated with a seam adhesive. Side seams shall be run toward the light where practical and where such layout does not increase the number of seams. Breadths shall be installed parallel, with carpet pile in the same direction. Patterns shall be accurately matched. Cutouts, as at door jambs, columns and ducts shall be neatly cut and fitted securely. Seams at doorways shall be located parallel to and centered directly under doors. Seams shall not be made perpendicular to doors or at pivot points. Seams at changes in directions of corridors shall follow the wall line parallel to the carpet direction. Corridors with widths less than 6 feet shall have the carpet laid lengthwise down the corridors.

3.5 CLEANING AND PROTECTION

3.5.1 Cleaning

After installation of the carpet, debris, scraps, and other foreign matter shall be removed. Soiled spots and adhesive shall be removed from the face of the carpet with appropriate spot remover. Protruding face yarn shall be cut off and removed. Carpet shall be vacuumed clean.

3.5.2 Protection

The installed carpet shall be protected from soiling and damage with heavy, reinforced, nonstaining kraft paper, plywood, or hardboard sheets. Edges of kraft paper protection shall be lapped and secured to provide a continuous cover. Traffic shall be restricted for at least 45 hours. Protective covering shall be removed when directed by the Contracting Officer.

3.6 REMNANTS

Remnants remaining from the installation, consisting of scrap pieces more than 2 feet in dimension with more than 6 square feet total, shall be provided. Non-retained scraps shall be removed from site.

END OF SECTION

SECTION 09900

PAINTING, GENERAL

1 GENERAL

1.1 REFERENCES

The publications listed below form a part of this specification to the extent referenced. The publications are referred to in the text by basic designation only.

AMERICAN CONFERENCE OF GOVERNMENTAL INDUSTRIAL HYGIENISTS (ACGIH)

ACGIH-02	(1996) Threshold Limit Values for Chemical Substances and Physical Agents and Biological Exposure Indices

AMERICAN SOCIETY FOR TESTING AND MATERIALS (ASTM)

ASTM C 150	(1992) Portland Cement
ASTM C 156	(1995) Standard Test Method for Water Retention by Concrete Curing Materials
ASTM C 309	(1997) Standard Specification for Liquid Membrane-Forming Compounds for Curing Concrete
ASTM D 3273	(1994) Resistance to Growth of Mold on the Surface of Interior Coating in an Environmental Chamber
ASTM D 3274	(1995) Evaluating Degree of Surface Disfigurement of Paint Films by Microbial (Fungal or Algal) Growth or Soil and Dirt Accumulation
ASTM D 4214	(1989) Evaluating the Degree of Chalking of Exterior Paint Films

COMMERCIAL ITEM DESCRIPTIONS (CID)

CID A-A-1500	(Rev A) Sealer, Surface (Latex Block Filler)
CID A-A-1550	(Basic) Wax, General Purpose, Solvent Type
CID A-A-1788	(Basic) Varnish, Oil: Interior
CID A-A-2246	(Rev A) Paint, Latex (Gloss, Interior)
CID A-A-2247	(Basic) Paint, Latex (Semigloss, Interior)
CID A-A-2248	(Basic) Paint, Latex, (Flat, Interior)
CID A-A-2867	(Basic) Coating, Polyurethane, Single Component Moisture Cure, Alipathic

CID A-A-2962	(Basic) Enamel, Alkyd
CID A-A-2994	(Basic) Primer Coating, Interior, for Walls and Wood

FEDERAL AVIATION ADMINISTRATION (FAA)

FAA AC 70/7460-1	(Rev H; Change 1 and 2) Obstruction Marking and Lighting

FEDERAL SPECIFICATIONS (FS)

FS P-W-155	(Rev C; Int Am 1) Wax, Floor, Water-Emulsion
FS TT-C-535	(Rev B; Am 2) Coating, Epoxy, Two Component, for Interior Use on Metal, Wood, Wallboard, Painted Surfaces Concrete and Masonry
FS TT-C-542	(Rev E) Coating, Polyurethane, Oil-Free, Moisture Curing
FS TT-C-555	(Rev B; Am 1) Coating, Textured (for Interior and Exterior Masonry Surfaces)
FS TT-E-487	(Rev E; Am 1) Enamel: Floor and Deck
FS TT-E-489	(Rev H) Enamel, Alkyd, Gloss, Low VOC Content
FS TT-E-496	(Rev B; Am 3) Enamel: Heat-Resisting (400 degrees F.), Black
FS TT-E-505	(Rev B) Enamel (Odorless, Alkyd, Interior, High Gloss)
FS TT-E-506	(Rev K; Am 1) Enamel, Alkyd, Gloss, Tints and White (for Interior Use)
FS TT-E-508	(Rev C; Am 1) Enamel, Interior Semigloss, Tints and White
FS TT-E-509	(Rev C) Enamel, Odorless, Alkyd, Interior, Semigloss, White and Tints
FS TT-E-2784	(Rev A) Enamel (Acrylic-Emulsion, Exterior Gloss and Semigloss) (Metric)
FS TT-E-545	(Rev C) Primer (Enamel-Undercoat, Alkyd, Odorless, Interior, Flat, Tints and White)
FS TT-F-1098	(Rev D) Filler, Block, Solvent-Thinned, for Porous Surfaces (Concrete Block, Cinder Block, Stucco, Etc.)
FS TT-P-19	(Rev D; Am 1) Paint, Latex (Acrylic Emulsion, Exterior Wood and Masonry)

FS TT-P-24	(Rev E) Paint, Oil (Exterior Concrete and Masonry)
FS TT-P-28	(Rev G) Paint, Aluminum, Heat Resisting (1200 Degrees F.)
FS TT-P-29	(Rev K) Paint, Latex
FS TT-P-30	(Rev E; Am 1) Paint, Alkyd, Odorless, Interior, Flat, White and Tints
FS TT-P-31	(Rev D) Paint, Oil: Iron-Oxide, Ready-Mixed, Red and Brown
FS TT-P-37	(Rev D; Am 4 Reinstatement Notice)Paint, Alkyd Resin: Exterior Trim, Deep Colors
FS TT-P-38	(Rev E) Paint, Aluminum (Ready-Mixed)
FS TT-P-91	(Rev D; Am 2) Paint, Rubber-Base, for Interior Use (Concrete and Masonry Floors)
FS TT-P-95	(Rev C; Am 1) Paint, Rubber: for Swimming Pools and Other Concrete and Masonry Surfaces
FS TT-P-102	(Rev F) Paint, Oil, (Alkyd Modified, Exterior, Low VOC)
FS TT-P-645	(Rev B) Primer, Paint, Zinc-Molybdate, Alkyd Type
FS TT-P-650	(Rev D) Primer Coating, Latex Base, Interior, White (for Gypsum Wallboard, or Plaster)
FS TT-P-1510	(Rev A; Am 1) Paint, Latex, Exterior, for Wood Surfaces, White and Tints
FS TT-P-1511	(Rev B) Paint, Latex (Gloss and Semigloss, Tints and White) (for Interior Use)
FS TT-P-001984	(Basic) Primer Coating, Latex Base, Exterior, (Undercoat for Wood), White and Tints
FS TT-P-002119	(Basic) Paint, Latex Base, High Traffic Area, Flat and Eggshell Finish (Low Lustre), (For Interior Use)
FS TT-S-176	(Rev E; Am 1) Sealer, Surface, Varnish Type, Floor Wood or Cork
FS TT-S-708	(Rev A; Am 2) Stain, Oil; Semi-Transparent, Wood, Exterior
FS TT-S-711	(Rev C) Stain; Oil Type, Wood, Interior
FS TT-S-001992	(Basic) Stain, Latex, Exterior for Wood Surfaces

FS TT-V-51	(Rev F) Varnish: Asphalt
FS TT-V-85	(Rev C; Int Am 2) Varnish, Oil, Low Sheen, Brush or Spray Application
FS TT-V-86	(Rev C; Am 1) Varnish, Oil, Rubbing (for Metal and Wood Furniture)
FS TT-V-109	(Rev C) Varnish, Interior, Alkyd-Resin
FS TT-V-119	(Rev D; Am 2) Varnish, Spar, Phenolic-Resin
FS TT-V-121	(Rev H) Varnish, Spar, Water-Resisting

FEDERAL STANDARDS (FED-STD)

FED-STD 313	(Rev C) Material Safety Data, Transportation Data and Disposal Data for Hazardous Materials Furnished to Government Activities
FED-STD 595	(Rev B) Colors Used in Government Procurement

MAPLE FLOORING MANUFACTURERS ASSOCIATION (MFMA)

MFMA-03	(1991) Floor Finish List and Specifications for Heavy Duty and Gymnasium Finishes for Maple, Beech and Birch Floors: MFMA Floor Finish List Number 11

MILITARY SPECIFICATIONS (MS)

MS MIL-C-83286	(Rev B; Am 2, Notice 1) Coating, Urethane, Aliphatic Isocyanate, for Aerospace Applications
MS MIL-P-24441/GEN	(Rev B; Am 1, Supple 1) Paint, Epoxy-Polyamide
MS MIL-P-26915	(Rev C) Primer Coating, Zinc Dust Pigmented, for Steel Surfaces
MS MIL-P-28577	(Rev B) Primer, Water Reducible, Corrosion Resistant, for Metal Surfaces
MS MIL-P-28578	(Rev B) Paint, Water Reducible, Semi-Gloss Exterior and Interior
MS MIL-P-28582	(Basic; Notice 1) Primer Coating, Exterior, Lead Pigment-Free (Undercoat for Wood, Ready-Mixed, White and Tints)
MS MIL-S-12935	(Rev D) Sealer, Surface; for Knots

STEEL STRUCTURES PAINTING COUNCIL (SSPC)

SSPC Paint 5	(1995) Zinc Dust, Zinc Oxide and Phenolic Varnish Paint
SSPC Paint 18	(1991) Chlorinated Rubber Intermediate Coat Paint
SSPC Paint 21	(1991) White or Colored Silicone Alkyd Paint
SSPC Paint 25	(1991) Red Iron Oxide, Zinc Oxide, Raw Linseed Oil and Alkyd Primer (without Lead and Chromate Pigments)
SSPC SP 1	(1982) Solvent Cleaning
SSPC SP 2	(1995) Hand Tool Cleaning
SSPC SP 3	(1995) Power Tool Cleaning
SSPC SP 6	(1991) Commercial Blast Cleaning
SSPC SP 7	(1994) Brush-Off Blast Cleaning
SSPC SP 10	(1991) Near-White Blast Cleaning

1.2 SUBMITTALS

Government approval is required for submittals with a "GA" designation; submittals having an "FIO" designation are for information only. The following shall be submitted in accordance with Section 01330 SUBMITTAL PROCEDURES:

SD-01 Data

Paint; GA.

The names, quantity represented, and intended use for the proprietary brands of materials proposed to be substituted for the specified materials when the required quantity of a particular batch is 50 gallons or less.

SD-06 Instructions

Mixing and Thinning; FIO. Application; FIO.

Manufacturer's current printed product description, material safety data sheets (MSDS) and technical data sheets for each coating system. MSDS submittals shall meet the requirements of FED-STD 313. Detailed mixing, thinning and application instructions, minimum and maximum application temperature, and curing and drying times between coats for epoxy, moisture-curing polyurethane, and liquid glaze coatings. Detailed application instructions for textured coatings shall be provided.

SD-09 Reports

Paint; FIO.

A statement as to the quantity represented and the intended use, plus the following test report for batches in excess of 50 gallons:

a. A test report showing that the proposed batch to be used meets all specification requirements, or:

b. A test report showing that a previous batch of the same formulation as the batch to be used met all specification requirements, plus, on the proposed batch to be used, a report of test results for properties of weight per gallon, viscosity, fineness of grind, drying time, color, and gloss.

SD-13 Certificates

Lead; FIO. Mildewcide and Insecticide; FIO. Volatile Organic Compound (VOC) Content; FIO.

Certificate stating that paints for interior use contain no mercurial mildewcide or insecticide. Certificate stating that paints proposed for use contain not more than 0.06 percent lead. Certificate stating that paints proposed for use meet the VOC regulations of the local Air Pollution Control Districts having jurisdiction over the geographical area in which the project is located.

SD-14 Samples

Moisture-curing Polyurethane; GA.

A complete moisture-curing polyurethane system applied to a panel of the same material as that on which the coating will be applied in the work and for each color specified. The sample panels will be used for quality control in applying the system.

Paint; GA.

While the material is at the site or source of supply, and at a time agreeable to the Contractor and the Contracting Officer, a 1 quart sample of each color and batch, except for quantities of 50 gallons or less, shall be taken by random selection from the sealed containers by the Contractor in the presence of a representative of the Contracting Officer. The contents of the containers to be sampled shall be thoroughly mixed to ensure that the sample is representative. Samples shall be identified by designated name, specification number, manufacturer name and address, batch number, project contract number, intended use, and quantity involved.

1.3 PACKAGING, LABELING, AND STORING

Paints shall be in sealed containers that legibly show the designated name, formula or specification number, batch number, color, quantity, date of manufacture, manufacturer's formulation number, manufacturer's directions including any warnings and special precautions, and name of manufacturer. Pigmented paints shall be furnished in containers not larger than 5 gallons. Paints and thinner shall be stored in accordance with the manufacturer's written directions and as a minimum stored off the ground, under cover, with sufficient ventilation to prevent the buildup of flammable vapors and at temperatures between 40 and 95 degrees F. Paints shall be stored on the

project site or segregated at the source of supply sufficiently in advance of need to allow 30 days for testing.

1.4 APPROVAL OF MATERIALS

When samples are tested, approval of materials will be based on tests of the samples; otherwise, materials will be approved based on test reports furnished with them. If materials are approved based on test reports furnished, samples will be retained by the Government for testing should the materials appear defective during or after application. In addition to any other remedies under the contract the cost of retesting defective materials will be at the Contractor's expense.

1.5 ENVIRONMENTAL CONDITIONS

Unless otherwise recommended by the paint manufacturer, the ambient temperature shall be between 45 and 95 degrees Fwhen applying coatings other than water-thinned, epoxy, and moisture-curing polyurethane coatings. Water-thinned coatings shall be applied only when ambient temperature is between 50 and 90 degrees F. Epoxy, and moisture-curing polyurethane coatings shall be applied only within the minimum and maximum temperatures recommended by the coating manufacturer. Moisture-curing polyurethane shall not be applied when the relative humidity is below 30 percent.

1.6 SAFETY AND HEALTH

Work shall comply with applicable Federal, State, and local laws and regulations, and with the ACCIDENT PREVENTION PLAN, including the Activity Hazard Analysis as specified in the CONTRACT CLAUSES. The Activity Hazard Analysis shall include analyses of the potential impact of painting operations on painting personnel and on others involved in and adjacent to the work zone.

1.6.1 Worker Exposures

Exposure of workers to chemical substances shall not exceed limits as established by ACGIH-02, or as required by a more stringent applicable regulation.

1.6.2 Toxic Compounds

Toxic compounds having ineffective physiological properties, such as odor or irritation levels, shall not be used unless approved by the Contracting Officer.

1.6.3 Training

Workers having access to an affected work area shall be informed of the contents of the applicable material data safety sheets (MSDS) and shall be informed of potential health and safety hazard and protective controls associated with materials used on the project. An affected work area is one which may receive mists and odors from the painting operations. Workers involved in preparation, painting and clean-up shall be trained in the safe handling and application, and the exposure limit, for each material which the worker will use in the project. Personnel having a need to use respirators and masks shall be instructed in the use and maintenance of such equipment.

1.6.4 Coordination

Work shall be coordinated to minimize exposure of building occupants, other Contractor personnel, and visitors to mists and odors from preparation, painting and clean-up operations.

2 PRODUCTS

2.1 PAINT

The term "paint" as used herein includes emulsions, enamels, paints, stains, varnishes, sealers, cement-emulsion filler, and other coatings, whether used as prime, intermediate, or finish coat. Paint shall conform to the respective specifications listed for use in the painting schedules at the end of this section, except when the required amount of a material of a particular batch is 50 gallons or less, an approved first-line proprietary paint material with similar intended usage and color to that specified may be used. Additional requirements are as follows:

2.1.1 Colors and Tints

Colors shall be as selected from manufacturer's standard colors, as indicated. Manufacturer's standard color is for identification of color only. selected from FED-STD 595. Tinting of epoxy, and urethane, paints shall be done by the manufacturer. Stains shall conform in shade to manufacturer's standard color. The color of the undercoats shall vary slightly from the color of the next coat.

2.1.2 Mildewcide and Insecticide

Paint specified for all coats applied to fabrics and vapor barrier jackets over insulation and surfaces in toilet rooms area shall contain a mildewcide that will not adversely affect the color, texture, or durability of the coating. The mildewcide shall be incorporated into the paint by the manufacturer and shall attain a surface disfigurement rating of 8 or greater when tested in accordance with ASTM D 3273 and evaluated in accordance with ASTM D 3274. Mercurial mildewcide shall not be used in interior paint. Insecticides shall not be used in paint.

2.1.3 Lead

Paints containing lead in excess of 0.06 percent by weight of the total nonvolatile content (calculated as lead metal) shall not be used.

2.1.4 Chromium

Paints containing zinc chromate or strontium chromate pigments shall not be used.

2.1.5 Volatile Organic Compound (VOC) Content

Paints shall comply with applicable state and local laws enacted to insure compliance with Federal Clean Air Standards and shall conform to the restrictions of the local air pollution control authority.

2.1.6 Dust-proofing Sealer

Product shall be compatible with ASTM C 156 and ASTM C 309, Type 1, Class A and B. Product shall be compatible with carpet and tile adhesives. Sealant shall not reduce slip-resistance of floor. Sealer finish shall be a non-yellowing, durable clear film on concrete with quartz aggregate for slip resistance.

3 EXECUTION

3.1 PROTECTION OF AREAS NOT TO BE PAINTED

Items not to be painted which are in contact with or adjacent to painted surfaces shall be removed or protected prior to surface preparation and painting operations. Items removed prior to painting shall be replaced when painting is completed. Following completion of painting, workmen skilled in the trades involved shall reinstall removed items. Surfaces contaminated by coating materials shall be restored to original condition.

3.2 SURFACE PREPARATION

Surfaces to be painted shall be clean and free of foreign matter before application of paint or surface treatments. Oil and grease shall be removed with clean cloths and cleaning solvents prior to mechanical cleaning. Cleaning solvents shall be of low toxicity with a flashpoint in excess of 100 degrees F. Cleaning shall be programmed so that dust and other contaminants will not fall on wet, newly painted surfaces. Exposed ferrous metals such as nail heads on or in contact with surfaces to be painted with water-thinned paints, shall be spot-primmed with a suitable corrosion-inhibitive primer capable of preventing flash rusting and compatible with the coating specified for the adjacent areas.

3.2.1 Concrete, Stucco and Masonry Surfaces

Concrete, stucco and masonry surfaces shall be allowed to dry at least 30 days before painting, except concrete slab on grade which shall be allowed to cure 90 days before painting. Glaze, efflorescence, laitance, dirt, grease, oil, asphalt, surface deposits of free iron and other foreign matter shall be removed prior to painting. Surfaces to receive polyurethane, chlorinated rubber or epoxy coatings shall be acid-etched or mechanically abraded as specified by the coating manufacturer, rinsed with water, allowed to dry, and treated with the manufacturer's recommended conditioner prior to application of the first coat.

3.2.2 Ferrous Surfaces

Ferrous surfaces including those that have been shop-coated, shall be solvent-cleaned. Surfaces that contain loose rust, loose mill scale, and other foreign substances shall be cleaned mechanically with hand tools according to SSPC SP 2, power tools according to SSPC SP 3 or by sandblasting according to SSPC SP 7. Shop-coated ferrous surfaces shall be protected from corrosion by treating and touching up corroded areas immediately upon detection.

3.2.3 Nonferrous Metallic Surfaces

Galvanized, aluminum and aluminum-alloy, lead, copper, and other nonferrous metal surfaces shall be solvent-cleaned or detergent-washed in accordance with SSPC SP 1.

3.2.4 Gypsum Board Surfaces

Gypsum board surfaces shall be dry and shall have all loose dirt and dust removed by brushing with a soft brush, rubbing with a cloth, or vacuum-cleaning prior to application of the first-coat material. A damp cloth or sponge may be used if paint will be water-based.

3.2.5 Wood Surfaces

Wood surfaces shall be cleaned of foreign matter. Wood surfaces adjacent to surfaces to receive water-thinned paints shall be primed and/or touched up before applying water-thinned paints. Small, dry seasoned knots shall be scraped, cleaned, and given a thin coat of knot sealer, MS MIL-S-12935, before application of the priming coat. Pitch on large, open, unseasoned knots and all other beads or streaks of pitch shall be scraped off, or, if it is still soft, removed with mineral spirits or turpentine, and the resinous area shall be thinly coated with knot sealer. Finishing nails shall be set, and all holes and surface imperfections shall be primed. After priming, holes and imperfections in finish surfaces shall be filled with putty or plastic wood filler, colored to match the finish coat if natural finish is required, allowed to dry, and sanded smooth. Putty or wood filler shall be compatible with subsequent coatings. Interior wood surfaces to receive stain shall be sanded. Oak and other open-grain wood to receive stain shall be given a coat of wood filler not less than 8 hours before the application of stain; excess filler shall be removed and the surface sanded smooth.

3.2.6 Concrete Surfaces

Surfaces shall be allowed to dry at least 30 days before sealing. Clean surfaces from all debris and deleterious substance with manufacturer's recommended cleaner as soon as all interior trades have completed their work. Prepare surfaces for receiving an acrylic based, dust-proofing sealer. Apply per manufacturer's recommendations.

3.3 MIXING AND THINNING

When thinning is approved as necessary to suit surface, temperature, weather conditions, or application methods, paints may be thinned in accordance with the manufacturer's directions. When thinning is allowed, paints shall be thinned immediately prior to application with not more than 1 pint of suitable thinner per gallon. The use of thinner shall not relieve the Contractor from obtaining complete hiding, full film thickness, or required gloss. Thinning shall not cause the paint to exceed local limits on volatile organic compounds. Paints of different manufacturers shall not be mixed.

3.3.1 Two-Component Systems

Two-component systems shall be mixed in accordance with manufacturer's instructions. Any thinning of the first coat to ensure proper penetration

and sealing shall be as recommended by the manufacturer for each type of substrate.

3.4 APPLICATION

Painting practices shall comply with applicable state and local laws enacted to insure compliance with Federal Clean Air Standards. Unless otherwise specified or recommended by the paint manufacturer, paint may be applied by brush, roller, or spray. At the time of application, paint shall show no signs of deterioration. Uniform suspension of pigments shall be maintained during application. Each coat of paint shall be applied so dry film shall be of uniform thickness and free from runs, drops, ridges, waves, pinholes or other voids, laps, brush marks, and variations in color, texture, and finish. Hiding shall be complete. Rollers for applying paints and enamels shall be of a type designed for the coating to be applied and the surface to be coated. Special attention shall be given to insure that all edges, corners, crevices, welds, and rivets receive a film thickness equal to that of adjacent painted surfaces. Paints, except water-thinned types, shall be applied only to surfaces that are completely free of moisture as determined by sight or touch.

3.4.1 Ventilation

Affected areas shall be ventilated during paint application so that workers exposure to chemical substances shall not exceed limits as established by ACGIH-02, or as required by a more stringent applicable regulation. Interior work zones having a volume of 10,000 cubic feet or less shall be ventilated at a minimum of 2 air exchanges per hour. Ventilation in larger work zones shall be maintained by means of mechanical exhaust. Solvent vapors shall be exhausted outdoors, away from air intakes and workers. Return air inlets in the work zone shall be temporarily sealed before start of work until the coatings have dried.

3.4.2 Respirators

Operators and personnel in the vicinity of operating paint sprayers shall wear respirators.

3.4.3 First Coat

The first coat on gypsum wallboard, and other surfaces shall include repeated touching up of suction spots or overall application of primer or sealer to produce uniform color and gloss. Excess sealer shall be wiped off after each application. The first coat on both faces of wood doors shall be applied at essentially the same time. Glazed doors and sashes shall be given the specified coating system within 3 weeks of the time they are glazed, but not before the glazing material has set; paint shall overlay glass about 70 mils all around. Each varnish coat shall be sanded lightly prior to application of subsequent coats.

3.4.4 Timing

Surfaces that have been cleaned, pretreated, and otherwise prepared for painting shall be given a coat of the specified first coat as soon as practical after such pretreatment has been completed, but prior to any deterioration of the prepared surface. Sufficient time shall elapse between successive coats to permit proper drying. This period shall be modified as

necessary to suit weather conditions. Oil-based or oleoresinous solvent-type paints shall be considered dry for recoating when the paint feels firm, does not deform or feel sticky under moderate pressure of the thumb, and the application of another coat of paint does not cause the undercoat to lift or lose adhesion. Manufacturer's instructions for application, curing and drying time between coats of two-component systems shall be followed.

3.5 #.1 STAINS

Stain shall be applied at the rate specified in the manufacturer's printed directions. Oil-type stain shall be applied by brushing with the grain for the full length of the board or course of siding.

3.6 #.1 TEXTURED COATING

Application of textured coating shall be as specified in the manufacturer's printed directions.

3.6.1 Ferrous-Metal Primer

Primer for ferrous-metal shall be applied to ferrous surfaces to receive paint other than asphalt varnish prior to deterioration of the prepared surface. The semitransparent film applied to some pipes and tubing at the mill is not to be considered a shop coat, but shall be overcoated with the specified ferrous-metal primer prior to application of finish coats.

3.7 PIPE COLOR CODE MARKING

Pipes in exposed areas and in accessible pipe spaces shall be provided with color band and titles adjacent to all valves, except those provided at plumbing fixtures, at not more than 40 foot spacing on straight pipe runs, adjacent to change in direction, and on both sides where pipes pass through walls or floors. Color code marking shall be of the color listed in TABLE I and the size listed in TABLE II. The arrows shall be installed adjacent to each band to indicate the direction of flow in the pipe. The legends shall be printed in upper-case black letters as listed in TABLE I. Letter sizes shall be as listed in TABLE II. Marking shall be painted or applied using colored, pressure-sensitive adhesive markers of standard manufacture. Paint shall be as specified for insulated and uninsulated piping.

TABLE I. COLOR CODES FOR MARKING PIPE

Material	Band	Letters and Arrow*	Legend
Cold water (potable)	Green	White	POTABLE WATER
Fire protection water	Red	White	FIRE PR. WATER
Hot water (domestic)	Green	White	H.W.
Hot water recirculating (domestic)	Green	White	H.W.R.
High temp. water supply	Yellow	Black	H.T.W.S.
High temp. water return	Yellow	Black	H.T.W.R.
Boiler feed water	Yellow	Black	B.F.
Low temp. water supply (heating)	Yellow	Black	L.T.W.S.
Low temp. water return (heating)	Yellow	Black	L.T.W.R.
Condenser water supply	Green	White	COND. W.S.

Condenser water return	Green	White	COND. W.R.
Chilled water supply	Green	White	C.H.W.S.
Chilled water return	Green	White	C.H.W.R.
Treated water	Yellow	Black	TR. WATER
Chemical feed	Yellow	Black	CH. FEED
Compressed air	Yellow	Black	COMP. AIR
Natural gas	Blue	White	NAT. GAS
Freon	Blue	White	FREON
Fuel oil	Yellow	Black	FUEL OIL
Steam	Yellow	Black	STM.
Condensate	Yellow	Black	COND.

TABLE II. COLOR CODE MARKING SIZES

Outside Diameter of Pipe Covering (mm)	Width of Color Band (mm)	Arrow Length x Width (mm)	Size of Legend Letters and Numerals (mm)
Less than 38	200	200 x 57	13
38 to 60	200	200 x 57	19
60 to 150	300	200 x 57	31
200 to 225	600	300 x 110	63
Over 250	800	300 x 115	88

TABLE II. COLOR CODE MARKING SIZES

Outside Diameter of Pipe Covering (Inches)	Length of Color Band (inches)	Arrow Length x Width (Inches)	Size of Legend Letters and Numerals (Inches)
Less than 1-1/2	8	8 x 2-1/4	1/2
1-1/2 to 2-3/8	8	8 x 2-1/4	3/4
2-1/2 to 7-7/8	12	8 x 2-1/4	1-1/4
8 to 10	24	12 x 4-1/2	2-1/2
Over 10	32	12 x 4-1/2	3-1/2

3.8 MISCELLANEOUS PAINTING

3.8.1 Lettering

Lettering shall be provided as indicated, shall be block type, and shall be black enamel. Samples shall be approved before application.

3.9 SURFACES TO BE PAINTED

Surfaces listed in the painting schedules at the end of this section, other than those listed in paragraph SURFACES NOT TO BE PAINTED, shall be painted as scheduled.

3.10 SURFACES NOT TO BE PAINTED

Surfaces in the following areas are not to be painted: Walls and ceiling in elevator shafts, unexposed interior ferrous surfaces, jacketing over installation pipes in unexposed locations that do not require color coding,

fire and smoke detectors, and sprinkler heads. In addition surfaces of hardware, fittings, and other factory finished items shall not be painted.

3.11 CLEANING

Cloths, cotton waste and other debris that might constitute a fire hazard shall be placed in closed metal containers and removed at the end of each day. Upon completion of the work, staging, scaffolding, and containers shall be removed from the site or destroyed in an approved manner. Paint and other deposits on adjacent surfaces shall be removed and the entire job left clean and acceptable.

3.12 PAINTING SCHEDULES

The following painting schedules identify the surfaces to be painted and prescribe the paint to be used and the number of coats of paint to be applied. Contractor options are indicated by or between optional systems or coats.

EXTERIOR PAINTING SCHEDULE

Surface	First Coat	Second Coat	Third Coat
Ferrous metal unless otherwise specified.	SSPC Paint 25	CID A-A-2962, Type I Grade C	CID A-A-2962 Type I Grade C
Galvanized.	FS TT-E-2784 Type III	FS TT-E-2784	FS TT-E-2784
Aluminum aluminum-alloy, and other non-ferrous metal (non-galvanized)	CID A-A-2867	CID A-A-2867	None
Brick masonry	Clear brick masonry sealer as specified	Clear brick masonry sealer as specified	None
Concrete, unless otherwise specified	Clear concrete sealer as specified	Clear concrete sealer as specified	None

<TBL>INTERIOR PAINTING SCHEDULE

Surface	First Coat	Second Coat	Third Coat
Plaster, gypsum board, and concrete, acoustical ceiling tile unless otherwise specified	CID A-A-2994 Type II	CID A-A-2247 ----------or---------- CID A-A-2248	CID A-A-2247 ----------or---------- CID A-A-2248
Interior concrete floors, clear dust proofing sealer with slip resistance	Clear dust-proofing sealer with slip resistance	Clear dust-proofing sealer with slip resistance	
Interior concrete floors and stair treads & landings where indicated	Lithochrome Chemstain - Apply as recommended by stain manufacturer		
Plaster and gypsum board: in shower areas and restrooms, unless otherwise specified.	CID A-A-2994 Type II	FS TT-E-2784	FS TT-E-2784
Ferrous metal unless otherwise specified.	CID A-A-2867	CID A-A-2867	None
Ferrous metal manufacturer. factory-primed mechanical and electrical equipment.	Two coats of paint as recommended by the equipment		

Galvanized Metal: unless otherwise specified.	SSPC Paint 5	Two coats of paint to match adjacent areas

Wood: unless otherwise specified.	CID A-A-2994 Type I	CID A-A-2247	None
Wood: Stain	Commercially Available Stain In addition a fourth coat of CID A-A-1788, Class I	CID A-A-1788 Class I	CID A-A-1788 Class I
Aluminum and Galvanized Surface Metal:			
Convector enclosures, electrical conduit runs metallic tubing uninsulated ducts and pipes, pipe hangers, louvers, grilles, and air outlets, in areas having painted adjacent surfaces.	FS TT-E-2784	CID A-A-2246 or CID A-A-2247 or CID A-A-2248	CID A-A-2246 or CID A-A-2247 or CID A-A-2248
Facing of vapor barrier jackets of presized or adhesive finished cloth cover insulation on pipes, ducts, and equipment exposed to view	Two coats of paint to match adjacent areas		None
Interior gypsum board, where indicated to receive 1PT-3	ZO Dri-Wall Primer 95	Zolatone 43	Zo-Pol clear Epoxy overcoat
Interior ferrous metal, where indicated to receive 1PT-3	ZO-plastic Primer	Zolatone 43	Zo-Pol clear Epoxy overcoat

Oil-based caulking compound.	FS TT-P-38	Same as adjacent areas

END OF SECTION

SECTION 09950

WALLCOVERINGS

1 GENERAL

1.1 REFERENCES

The publications listed below form a part of this specification to the extent referenced. The publications are referred to in the text by basic designation only.

AMERICAN SOCIETY FOR TESTING AND MATERIALS (ASTM)

ASTM C 423	(1990a) Sound Absorption and Sound Absorption Coefficients by the Reverberation Room Method
ASTM E 84	(1996a) Surface Burning Characteristics of Building Materials
ASTM F 793	(1993) Standard Classification of Wallcovering by Durability Characteristics

1.2 SUBMITTALS

Government approval is required for submittals with a "GA" designation; submittals having an "FIO" designation are for information only. The following shall be submitted in accordance with Section 01330 SUBMITTAL PROCEDURES:

SD-01 Data

Wallcovering and Accessories; FIO.

Manufacturer's descriptive data, documentation stating physical characteristics, flame resistance, mildew and germicidal characteristics.

SD-06 Instructions

Installation; FIO.

Preprinted installation instructions for wallcovering and accessories.

Maintenance; FIO.

Preprinted cleaning and maintenance instructions for wallcovering and accessories.

SD-13 Certificates

Wallcovering; FIO.

Manufacturer's statement attesting that the product furnished meets or exceeds specification requirements. The statement must; be dated after the award of the contract, state Contractor's name and address, name the project and location, and list the requirements being certified.

SD-14 Samples

Wallcovering and Accessories; GA.

Three samples of each indicated type, pattern, and color of wallcovering. Samples of wall covering shall be minimum 5 x 7 inches and of sufficient size to show pattern repeat. Three samples of vinyl framework for fabric panel.

1.3 DELIVERY AND STORAGE

Materials shall be delivered to the site in manufacturers original unopened containers labeled with manufacturers name, pattern, texture, size and related information. Materials shall be stored in accordance with the manufacturer's instructions in a clean dry ventilated area with temperature maintained above 60 degrees F for two days prior to installation.

1.4 ENVIRONMENTAL REQUIREMENTS

Areas to receive wallcovering shall be maintained at a temperature above 60 degrees F for 7 days before, during, and 7 days after application.

1.5 WARRANTY

Manufacturer's standard performance guarantees or warranties that extend beyond a one-year period shall be provided.

1.6 EXTRA MATERIALS

Extra material from the same dye lot consisting of 0.5 yardsof full-width wallcovering for each 30 linear yards of wallcovering installed shall be provided for maintenance.

2 PRODUCTS

2.1 WALLCOVERINGS

Wallcoverings shall be material designed specifically for the specified use. The wallcovering shall contain a non-mercury based mildewcide. The wallcovering shall be type made without the use of cadmium based stabilizers. Wallcovering shall have a Class A flame spread rating of 0-25 and smoke development rating of 0-50 when tested in accordance with ASTM E 84.

2.1.1 Vinyl Wallcovering Type WC-1

Vinyl wallcovering shall be a vinyl coated woven or nonwoven fabric with germicidal additives and shall conform to ASTM F 793, Category IV, Type I, (8 to 13 ounces) total weight per square yard and width of 51 inches.

2.1.2 Fabric Wallcovering Type WC-2, WF-1

Fabric wallcovering shall be a woven fabric with paper or acrylic backing and shall be colorfast, stain, and soil resistant. Fabric wallcovering shall meet or exceed the following:

a. Face fiber content: polyolefin.

b. Total weight: 7.8 ounces per square yard.

c. Width: 54 inches.

2.2 #.1 FABRIC PANEL SYSTEM

The fabric panel system shall consist of a site installed and fabricated, concealed fabric panel system. The fabric panels shall consist of a rigid vinyl framework with rigid locking jaws. Vinyl frame shall be 1-1/2 inch wide by 1 inch high and at least 0.055 inch thick. Hinged or wood systems are not acceptable. One inch thick semi-rigid fiberglass insulation shall be infilled between the framework to form a continuous sub-surface. Fabric shall be stretched over framework to form a smooth taught surface. Fabric color, texture, and pattern shall be as indicated.

2.3 PRIMER AND ADHESIVE

Primer and adhesive shall be of a type recommended by the wallcovering manufacturer and shall contain a non-mercury based mildewcide. Adhesive shall be strippable type. Adhesive to install cap shall be of a type recommended by the manufacturer of the wainscot cap.

2.4 COLOR, TEXTURE, AND PATTERN

Color, texture, and pattern shall be as indicated.

3 EXECUTION

3.1 EXAMINATION

Contractor shall inspect all areas and conditions under which wallcoverings are to be installed. Contractor shall notify in writing of any conditions detrimental to the proper and timely completion of the installation. Work will proceed only when conditions have been corrected and accepted by the installer.

3.2 SURFACE PREPARATION

Wallcovering shall not be applied to surfaces that are rough, that contain stains that will bleed through the wallcovering, or that are otherwise unsuitable for proper installation. Cracks and holes shall be filled and rough spots shall be sanded smooth. Surfaces to receive wallcovering shall be thoroughly dry. Plaster surfaces shall age at least 30 days prior to installation of vinyl wallcoverings. Interior surfaces of exterior masonry walls shall be sealed to prevent moisture penetration, then primed with a wallcovering primer in accordance with the manufacturer's instructions. Moisture content of plaster, concrete, and masonry shall be tested with an electric moisture meter and reading shall be not more than 5 percent. Masonry walls shall have flush joints. Concrete and masonry walls shall be coated with a thin coat of joint compound or cement plaster as a substrate preparation. To promote adequate adhesion of wall lining over masonry walls, the walls shall be primed as recommended by the wall lining manufacturer. Surface of walls shall be primed as required by manufacturer's instructions to permit ultimate removal of wallcovering from

the wall surface. Primer shall be allowed to completely dry before adhesive application.

3.3 INSTALLATION

3.3.1 Vinyl and Fabric Wallcovering

Wallcovering shall be installed in accordance with the manufacturer's installation instructions. Glue and adhesive spillage shall be immediately removed from wallcovering face and seams with a remover recommended by the manufacturer. After the installation is complete, the fabric wallcovering shall be vacuumed with a ceiling to floor motion.

3.4 #.1 FABRIC PANEL SYSTEM

Fabric Panel System shall be site installed and fabricated per manufacturers' written instructions.

3.5 CLEAN-UP

Upon completion of the work, wallcovering shall be left clean and free of dirt or soiling. Surplus materials, rubbish, and debris resulting from the wallcovering installation shall be removed and area shall be left clean.

END OF SECTION

SECTION 10160

TOILET PARTITIONS

1 GENERAL

1.1 REFERENCES

The publications listed below form a part of this specification to the extent referenced. The publications are referred to in the text by basic designation only.

CODE OF FEDERAL REGULATIONS (CFR)

CFR 28 Part 36	Americans with Disabilities Act Accessibility Guidelines

FEDERAL SPECIFICATIONS (FS)

FS RR-P-1352	(Rev C) Partitions, Toilet, Complete

FEDERAL STANDARDS (FED-STD)

FED-STD 795	(Basic) Uniform Federal Accessibility Standards

1.2 SYSTEM DESCRIPTION

Toilet partition system, including toilet enclosures, room entrance screens, and urinal screens, shall be a complete and usable system of panels, hardware, and support components. The partition system shall be provided by a single manufacturer and shall be a standard product as shown in the most recent catalog data. The partition system shall comply with FED-STD 795 and CFR 28 Part 36 for areas as shown.

1.3 SUBMITTALS

Government approval is required for submittals with a "GA" designation; submittals having an "FIO" designation are for information only. The following shall be submitted in accordance with Section 01330 SUBMITTAL PROCEDURES:

SD-01 Data

Toilet Partition System; FIO.

Manufacturer's technical data and catalog cuts including installation and cleaning instructions.

SD-04 Drawings

Toilet Partition System; GA.

Drawings showing plans, elevations, details of construction, hardware, reinforcing, fittings, mountings, and anchorings.

SD-14 Samples

Toilet Partition System; GA.

Manufacturer's standard color charts and color samples.

1.4 DELIVERY, STORAGE, AND HANDLING

Components shall be delivered to the jobsite in the manufacturer's original packaging with the brand, item identification, and project reference clearly marked. Components shall be stored in a dry location that is adequately ventilated and free from dust, water, or other contaminants and shall have easy access for inspection and handling.

1.5 WARRANTY

Manufacturer's standard performance guarantees or warranties that extend beyond a 1 year period shall be provided.

2 PRODUCTS

2.1 TOILET ENCLOSURES

Toilet enclosures shall conform to FS RR-P-1352, Type I, Style A. Width, length and height of toilet enclosures shall be as shown. Finish surface of panels shall be solid phenolic core (Finish 5). Panels indicated to receive toilet paper holders or grab bars as specified in Section 10800 TOILET ACCESSORIES shall be reinforced for the reception of the items required. Grab bars shall comply with FED-STD 795 and CFR 28 Part 36.

2.2 #.1 URINAL SCREENS

Urinal screens shall conform to FS RR-P-1352, Type III, Style D. Finish surface of screens shall be solid phenolic core (Finish 5).

2.3 HARDWARE

Hardware for the toilet partition system shall conform to FS RR-P-1352for the specified type and style of partitions. Hardware finish shall be highly resistant to alkalies, urine, and other common toilet room acids.

2.4 COLORS

Color of finishes for toilet partition system components shall be indicated on finish schedule.

3 EXECUTION

3.1 INSTALLATION

Toilet partitions shall be installed straight and plumb in accordance with approved manufacturer's instructions with horizontal lines level and rigidly anchored to the supporting construction. Anchorage to walls shall be by through-bolting. Drilling and cutting for installation of anchors shall be at locations that will be concealed in the finished work.

3.2 ADJUSTING AND CLEANING

Doors shall have a uniform vertical edge clearance of approximately 3/16 inch and shall rest open at approximately 30 degrees when unlatched. Baked enamel finish shall be touched up with the same color of paint that was used for the finish. Toilet partitions shall be cleaned in accordance with approved manufacturer's instructions and shall be protected from damage until accepted.

END OF SECTION

SECTION 10430

EXTERIOR SIGNAGE

1 GENERAL

1.1 REFERENCES

The publications listed below form a part of this specification to the extent referenced. The publications are referred to in the text by basic designation only.

ALUMINUM ASSOCIATION (AA)

AA DAF-45	(1980) Designation System for Aluminum Finishes

AMERICAN NATIONAL STANDARDS INSTITUTE (ANSI)

ANSI Z97.1	(1984; Rev 1994) Safety Performance Specifications and Methods of Test for Safety Glazing Materials Used in Buildings

AMERICAN SOCIETY FOR TESTING AND MATERIALS (ASTM)

ASTM A 36	(1996) Carbon Structural Steel
ASTM A 123	(1989a) Zinc (Hot-Dip Galvanized) Coatings on Iron and Steel Products
ASTM A 570	(1996) Steel, Sheet and Strip, Carbon, Hot-Rolled, Structural Quality
ASTM A 653	(1996) Steel Sheet, Zinc-Coated (Galvanized) or Zinc-Iron Alloy-Coated (Galvannealed) by the Hot-Dip Process
ASTM A 653M	(1995) Steel Sheet, Zinc-Coated (Galvanized) or Zinc-Iron Alloy-Coated (Galvannealed) by the Hot-Dip Process (Metric)
ASTM A 924	(1996) Steel Sheet, Metallic-Coated by the Hot-Dip Process
ASTM A 924M	(1995) Steel Sheet, Metallic-Coated by the Hot-Dip Process (Metric)
ASTM B 26	(1996) Aluminum-Alloy Sand Castings
ASTM B 62	(1993) Composition Bronze or Ounce Metal Castings
ASTM B 108	(1996) Aluminum-Alloy Permanent Mold Castings
ASTM B 209	(1996) Aluminum and Aluminum-Alloy Sheet and Plate

ASTM B 221	(1996) Aluminum and Aluminum-Alloy Extruded Bars, Rods, Wire, Shapes, and Tubes
ASTM C 1036	(1991) Flat Glass
ASTM D 3841	(1992) Glass-Fiber-Reinforced Polyester Plastic Panels
ASTM E 84	(1996a) Surface Burning Characteristics of Building Materials

AMERICAN WELDING SOCIETY (AWS)

AWS D1.1	(1994) Structural Welding Code - Steel

NATIONAL ASSOCIATION OF ARCHITECTURAL METAL MANUFACTURERS (NAAMM)

NAAMM AMP 505	(1988) Metal Finishes Manual for Architectural and Metal Products; Section: Applied Coatings

NATIONAL FIRE PROTECTION ASSOCIATION (NFPA)

NFPA 70	(1996) National Electrical Code

SOCIETY OF AUTOMOTIVE ENGINEERS (SAE)

SAE AMS 3611	(1994; Rev D) Plastic Sheet, Polycarbonate General Purpose

1.2 GENERAL

Exterior signage shall be of the size and type shown on the drawings, shall conform to the requirements specified herein, and shall be provided at the locations indicated. Signs shall be complete with lettering, framing as detailed, and related components for a complete installation. Materials and equipment shall be the standard product of a manufacturer regularly engaged in the manufacture of the products. Items of equipment shall essentially duplicate equipment that has been in satisfactory use at least 2 years prior to bid opening.

1.3 SUBMITTALS

Government approval is required for submittals with a "GA" designation; submittals having an "FIO" designation are for information only. The following shall be submitted in accordance with Section 01330 SUBMITTAL PROCEDURES:

SD-01 Data

Exterior Signs; FIO.

Manufacturer's descriptive data, catalog cuts, and installation instructions.

SD-04 Drawings

Exterior Signs; GA.

Drawings showing elevations of each type of sign; dimensions, details, and methods of mounting or anchoring; shape and thickness of materials; and details of construction. A schedule showing the location of each sign type shall be included.

SD-06 Instructions

Exterior Signs; FIO.

Manufacturer's installation instructions and cleaning instructions.

SD-14 Samples

Exterior Signs; GA.

One sample of each type of sign. Each sample shall consist of a complete sign panel with letters and symbols. Samples may be installed in the work, provided each sample is identified and location recorded. Two samples of manufacturer's standard color chips for each material requiring color selection.

1.4 DELIVERY AND STORAGE

Materials shall be wrapped for shipment and storage, delivered to the jobsite in manufacturer's original packaging, and stored in a clean, dry area.

2 PRODUCTS

2.1 COLOR, FINISH, AND CONTRAST

Color of products shall be as indicated. For buildings required to be handicapped-accessible, the characters and background of signs shall be eggshell, matte, or other non-glare finish. Characters and symbols shall contrast with their background: light characters on a dark background.

2.1 CHARACTER PROPORTIONS AND HEIGHTS

Letters and numbers on signs for handicapped-accessible buildings shall have a width-to-height ratio between 3:5 and 1:1 and a stroke-width-to-height ratio between 1:5 and 1:10. Characters and numbers on signs shall be sized according to the viewing distance from which they are to be read. The minimum height is measured using an upper case letter X. Lower case characters are permitted.

2.2 ALUMINUM ALLOY PRODUCTS

Aluminum alloy products shall conform to ASTM B 209 for sheet or plate, ASTM B 221 for extrusions and ASTM B 26 or ASTM B 108 for castings. Aluminum extrusions shall be provided at least 1/8 inch thick and aluminum plate or sheet at least 16 gauge, 0.0508 inch thick.

2.2.1 Anodic Coating

Anodized finish shall conform to AA DAF-45 as follows:

a. Clear (natural) designation AA-M10-C22-A31, Architectural Class II 0.4 mil or thicker.

b. Integrated color anodized designation AA-M10-C22-A32, Architectural Class 0.4 to 0.7 mil.

c. Electrolytically deposited color - anodized designation AA-M10-C22-A34, Architectural Class II 0.4 to 0.7 mil.

2.3 ORGANIC COATING

Surfaces shall be cleaned, primed, and given a semi-gloss baked enamel or two-component acrylic polyurethane finish in accordance with NAAMM AMP 505 with total dry film thickness not less than 1.2 mils.

2.4 CAST METAL

Components shall be fabricated with sharp corners, flat faces, and accurate profiles. Burrs and rough spots shall be removed and polished. Faces shall be finished to a uniform high luster.

2.4.1 Cast Aluminum

Cast aluminum shall be in accordance with ASTM B 108.

2.5 ANCHORS AND FASTENERS

Exposed anchor and fastener materials shall be compatible with metal to which applied and shall match in color and finish.

2.6 SHOP FABRICATION AND MANUFACTURE

2.6.1 Workmanship

Work shall be assembled in the shop, insofar as practicable, ready for installation at the site. Work that cannot be shop assembled shall be given a trial fit in the shop to ensure proper field assembly. Holes for bolts and screws shall be drilled or punched. Drilling and punching shall produce clean, true lines and surfaces. Welding to or on structural steel shall be in accordance with AWS D1.1. Welding shall be continuous along the entire area of contact. Exposed welds shall be ground smooth. Exposed surfaces of work shall have a smooth finish and exposed riveting shall be flush. Fastenings shall be concealed where practicable. Items specified to be galvanized shall be by hot-dip process after fabrication if practicable. Galvanization shall be in accordance with ASTM A 123 and ASTM A 653 or ASTM A 653M, as applicable. Other metallic coatings of steel sheet shall be in accordance with ASTM A 924 or ASTM A 924M. Joints exposed to the weather shall be formed to exclude water. Drainage and weep holes shall be included as required to prevent condensation buildup.

2.6.2 Dissimilar Materials

Where dissimilar metals are in contact, or where aluminum is in contact with concrete, mortar, masonry, wet or pressure-treated wood, or absorptive materials subject to wetting, the surfaces shall be protected with a coat of asphalt varnish or a coat of zinc-molybdate primer to prevent galvanic or corrosive action.

2.6.3 Shop Painting

Surfaces of miscellaneous metal work, except nonferrous metal, corrosion resisting steel, and zinc-coated work, shall be given one coat of zinc-molybdate primer or an approved rust-resisting treatment and metallic primer in accordance with manufacturer's standard practice. Surfaces of items to be embedded in concrete shall not be painted. Upon completion of work, damaged surfaces shall be recoated.

2.7 PANEL TYPE SIGNS

2.7.1 Panels

Panels shall be fabricated a minimum of 0.125 inch aluminum. Panels with metal return sheeting shall have welded corners, ground smooth.

2.8 GRAPHICS FOR PANEL TYPE SIGNS

2.8.1 Graphics

Signage graphics shall conform to the following:

a. Message shall be applied to panel using the silkscreen process. Silkscreened images shall be executed with photo screens prepared from original art. No handcut screens will be accepted. Original art shall be defined as artwork that is a first generation stencil of the original specified art. Edges and corners shall be clean. Rounded corners, cut or ragged edges, edge buildup, bleeding or surfaces pinholes will not be accepted.

b. Message shall be applied using the frisket method. Photomechanically reproduced graphic masks shall be applied to the sign face which has been coated with the graphics color. A background shall then be applied to the exposed surfaces. No handcut masks will be accepted. Edges that are nicked, cut, or ragged will not be acceptable.

2.8.2 Messages

See drawings and schedule and coordinate with Contracting Officer for message content. Typeface: Helvetica medium. Type size as indicated.

2.9 DIMENSIONAL BUILDING LETTERS

2.9.1 Fabrication

Letters shall be fabricated from cast aluminum. Letters shall be cleaned by chemical etching or cleaned ultrasonically in a special degreasing bath. Letters shall be packaged for protection until installation.

2.9.2 Typeface

Typeface shall be helvetica medium.

2.9.3 Size

Letter size shall be as indicated.

2.9.4 Finish

Anodized finish shall be provided.

2.9.5 Mounting

Threaded studs, of number and size as recommended by manufacturer, shall be secured in quick-setting mortar for concealed anchorage. Letters which project from the building line shall have stud spacer sleeves. Letters, studs, and sleeves shall be of the same material. Templates for mounting shall be supplied.

3 EXECUTION

3.1 INSTALLATION

Signs shall be installed in accordance with approved manufacturer's instructions at locations shown on the drawings. Signs shall be installed plumb and true at mounting heights indicated, and by method shown or specified. Signs mounted on other surfaces shall not be installed until finishes on such surfaces have been completed.

3.1.1 Anchorage

Anchorage shall be in accordance with approved manufacturer's instructions. Anchorage not otherwise specified or indicated shall include slotted inserts, expansion shields, and power-driven fasteners when approved for concrete; toggle bolts and through bolts for masonry; machine carriage bolts for steel.

3.1.2 Protection and Cleaning

The work shall be protected against damage during construction. Hardware shall be adjusted for proper operation. Glass, frames, and other sign surfaces shall be cleaned in accordance with manufacturer's instructions.

END OF SECTION

SECTION 10440

INTERIOR SIGNAGE

1 GENERAL

1.1 REFERENCES

The publications listed below form a part of this specification to the extent referenced. The publications are referred to in the text by basic designation only.

ALUMINUM ASSOCIATION (AA)

AA DAF-45	(1980) Designation System for Aluminum Finishes
AA PK-1	(1989) Registration Record of Aluminum Association Alloy Designations and Chemical Composition Limits for Aluminum Alloys in the Form of Castings and Ingot
AA SAA-46	(1978) Standards for Anodized Architectural Aluminum

AMERICAN ARCHITECTURAL MANUFACTURERS ASSOCIATION (AAMA)

AAMA 605.2	(1992; Addenda Jan 1995) Voluntary Specification for High Performance Organic Coatings on Architectural Extrusions and Panels

AMERICAN NATIONAL STANDARDS INSTITUTE (ANSI)

ANSI Z97.1	(1984; Rev 1994) Safety Performance Specifications and Methods of Test for Safety Glazing Materials Used in Buildings

AMERICAN SOCIETY FOR TESTING AND MATERIALS (ASTM)

ASTM B 209	(1996) Aluminum and Aluminum-Alloy Sheet and Plate
ASTM B 221	(1996) Aluminum and Aluminum-Alloy Extruded Bars, Rods, Wire, Shapes, and Tubes
ASTM C 1036	(1991) Flat Glass

NATIONAL FIRE PROTECTION ASSOCIATION (NFPA)

NFPA 70	(1996) National Electrical Code

1.2 GENERAL

Interior signage shall be of the sizes and types shown on the drawings, shall conform to the requirements specified herein, and shall be provided at

the locations indicated. Signs shall be complete with lettering, framing as detailed, and related components for a complete installation. Signs shall be the standard product of a manufacturer regularly engaged in the manufacture of such products and shall essentially duplicate signs that have been in satisfactory use at least 2 years prior to bid opening.

1.3 SUBMITTALS

Government approval is required for submittals with a "GA" designation; submittals having an "FIO" designation are for information only. The following shall be submitted in accordance with Section 01330 SUBMITTAL PROCEDURES:

SD-01 Data

Interior Signage; GA.

Manufacturer's descriptive data, catalogs cuts, installation and cleaning instructions.

SD-04 Drawings

Interior Signage; GA.

Drawings showing elevations of each type of sign, dimensions, details and methods of mounting or anchoring, shape and thickness of materials, and details of construction. A schedule showing the location of each sign type shall be included.

SD-14 Samples

Interior Signage; GA.

One sample of each of the following sign types showing typical quality and workmanship. The samples may be installed in the work, provided each sample is identified and location recorded.

a. Door sign.

b. Building directory.

Two samples of manufacturer's standard color chips for each material requiring color selection.

1.4 DELIVERY AND STORAGE

Materials shall be delivered to the jobsite in manufacturer's original packaging and stored in a clean, dry area.

1.5 EXTRA STOCK

The Contractor shall provide extra frames and extra stock of the following: 6 blank plaques of each color and size for sign type General Room Sign. 3 Alphabetical sets and 4 numerical sets of pressure-sensitive letters in each color and size for sign types General Room Sign and Building Directory.

2 PRODUCTS

2.1 COLOR, FINISH, AND CONTRAST

Color shall be as indicated.

2.2 CHARACTER PROPORTIONS AND HEIGHTS

Letters and numbers on signs in handicapped-accessible buildings, which do not designate permanent rooms or spaces, shall have a width-to-height ratio between 3:5 and 1:1 and a stroke-width-to-height ratio between 1:5 and 1:10.

2.3 ALUMINUM ALLOY PRODUCTS

Aluminum extrusions shall be at least 1/8 inch thick, and aluminum plate or sheet shall be at least 0.0508 inch thick. Extrusions shall conform to ASTM B 221; plate and sheet shall conform to ASTM B 209. Where anodic coatings are specified, alloy shall conform to AA PK-1 alloy designation 514.0. Exposed anodized aluminum finishes shall be as shown and shall conform to AA SAA-46.

2.3.1 Anodic Coating

Anodized finish shall conform to AA DAF-45 as follows:

a. Integral color anodized designation AA-M10-C22-A32, Architectural Class 0.4 to 0.7 mil.

2.3.2 Organic Coating

Organic coating shall conform to AAMA 605.2, with total dry film thickness not less than 1.2 mils.

2.4 VINYL SHEETING FOR GRAPHICS

Vinyl sheeting for graphics shall be a minimum 0.003 inch film thickness. Film shall include a precoated pressure sensitive adhesive backing.

2.5 ACRYLIC SHEET

Acrylic sheet for panels and components shall conform to ANSI Z97.1.

2.6 GRAPHICS

2.6.1 Raised and Brailled Characters and Pictorial Symbol S

Letters and numbers on signs which designate permanent rooms and spaces in handicapped-accessible buildings shall be raised 1/32 inch upper case, sans serif or simple serif type and shall be accompanied with Grade 2 Braille. Raised characters shall be at least 1/2 inch height, but no higher than 2 inches. Pictograms shall be accompanied by the equivalent verbal description placed directly below the pictogram. The border dimension of the pictogram shall be 6 inches minimum in height. Accessible facilities shall use the international symbol of access.

2.6.2 Graphics Application

Signage graphics shall conform to the following:

a. Pressure sensitive precision cut vinyl letters shall be provided. Edges and corners of finished letter forms and graphics shall be true and clean.

b. Tactile characters and symbols shall be raised 1/32 inch minimum from the sign face. Signs shall be of one piece construction. Add-on characters are not acceptable.

2.6.3 Messages

See drawings and schedule for message content, Typeface, and Type size.

2.7 ANCHORS AND FASTENERS

Exposed anchor and fastener materials shall be compatible with metal to which applied and shall have matching color and finish. Anchorage system shall be of the type recommended by the manufacturer of the indicated substrate. Where recommended by signage manufacturer, foam tape pads may be used for anchorage. Foam tape pads shall be minimum 1/16 inch thick closed cell vinyl foam with adhesive backing. Adhesive shall be transparent, long aging, high tech formulation on two sides of the vinyl foam. Adhesive surfaces shall be protected with a 5 mil green flatstock treated with silicone. Foam pads shall be sized for the signage as per signage manufacturer's recommendations.

2.8 FABRICATION AND MANUFACTURE

2.8.1 Workmanship

Holes for bolts and screws shall be drilled or punched. Drilling and punching shall produce clean, true lines and surfaces. Exposed surfaces of work shall have a smooth finish and exposed riveting shall be flush. Fastenings shall be concealed where practicable.

2.8.2 Dissimilar Materials

Where dissimilar metals are in contact, the surfaces will be protected to prevent galvanic or corrosive action.

3 EXECUTION

3.1 INSTALLATION

Signs shall be installed in accordance with approved manufacturer's instructions at locations shown on the drawings. Signs shall be installed plumb and true at mounting heights indicated, and by method shown or specified. Signs which designate permanent rooms and spaces in handicapped-accessible buildings shall be installed on the wall adjacent to the latch side of the door. Where there is no wall space to the latch side of the door, including at double leaf doors, signs shall be placed on the nearest adjacent wall. Mounting height shall be 60 inchesabove the finish floor to the centerline of the sign. Mounting location for such signage shall be so that a person may approach within 3 inches of signage without encountering

protruding objects or standing within the swing of a door. Signs on doors or other surfaces shall not be installed until finishes on such surfaces have been installed.

3.1.1 Anchorage

Anchorage shall be in accordance with approved manufacturer's instructions. Anchorage not otherwise specified or indicated shall include slotted inserts, expansion shields, and power-driven fasteners when approved for concrete; toggle bolts and through bolts for masonry; machine carriage bolts for steel; lag bolts and screws for wood.

3.1.2 Protection and Cleaning

The work shall be protected against damage during construction. Hardware and electrical equipment shall be adjusted for proper operation. Glass, frames, and other sign surfaces shall be cleaned in accordance with the manufacturer's approved instructions.

END OF SECTION

SECTION 10505

METAL LOCKERS

1 GENERAL

1.1 #.1 REFERENCES

The publications listed below form a part of this specification to the extent referenced. The publications are referred to within the test by the basic designation only.

FEDERAL SPECIFICATIONS (FS)

FS AA-L-00486 (Rev. J) Lockers, Clothing, Steel

1.2 DESIGN

Lockers shall be constructed of steel. Design of lockers shall be by the Contractor using specified requirements as a minimum of acceptability. Each multi-tier locker shall be a complete unit capable of relocation without modifying or adding components, except for anchors and scribes. Common sides or backs between adjacent units are not permissible. The dimensions specified are for the purpose of establishing general layout. Minor variations necessary to coordinate the details of construction will be permitted. Details not shown or otherwise specified shall be logical and compatible with the details specified or shall be in accordance with alternate details approved for use. All parts shall be manufactured to standards that will permit replacement without modifying of remaining parts. Materials not definitely specified shall be of a quality consistent with the quality required for other materials and suitable for the end use.

1.3 CONFIGURATION OF PL1 IN ROOMS 139, 140 AND 141

Lockers shall be two-compartment double tier type. Each compartment shall have a hinged door, a ceiling mounted double clothes hanging hook, and two wall mounted clothes hanging hooks each side of compartment. Overhead compartment shall be identical to lower compartment. General dimensions of each double tier unit, as far as manufacturing tolerances and standard commercial sizes permit, shall be in accordance with the following:

Overall width: 12 inches.

Overall depth: 21 inches.

Overall height: (2) 36" = 72"

Base: 4 inches high.

1.4 SUBMITTALS

Government approval is required for submittals with a "GA" designation; submittals having an "FIO" designation are for information only. The following shall be submitted in accordance with Section 01330SUBMITTAL PROCEDURES:

SD-04 Drawings

Locker Units; FIO.

Drawings shall show plans, elevations, sections, construction details, thicknesses of members, methods of fastening, and hardware details. Information as needed to fully describe the lockers and their installation into the work, and specifications for the required finish shall be included.

SD-09 Reports

Static Load Tests; FIO.

Test results indicating conformance to static load tests.

Samples

Locker Units; GA. Metal Finishes; GA.

One complete double tier locker unit. The sample unit may be incorporated into the finished locker installation, provided the unit is identified and its location noted.

1.5 DELIVERY AND STORAGE

Steel lockers may be delivered knocked-down. Lockers shall be delivered to the site in undamaged condition, stored in fully covered areas, and protected from damage.

2 PRODUCTS

2.1 HARDWARE

2.1.1 Hinges

Hinges shall be brass or steel, not less than 0.062 inch thick, 5 knuckle, tamper-proof institutional type, joint length not less than 2-1/2 inches, chromium finish. When doors are closed, only a smooth beveled and rounded joint shall be exposed. Doors 42 inches and less on the hinged side shall have two hinges; doors more than 42 inches on the hinged side shall have three hinges.

2.1.2 Latches

The handle shall be of the recessed type, of cast brass or bronze, and shall be designed to permit locking by padlocking the handle to a steel keeper with a matching hole. A 14-gauge rectangular corrosion resisting steel shield shall be provided to protect the door from damage at the handle and padlock area. The interior components of the mechanism shall include locking bars or rods not less than 1/2-inch thick, two steel upper guides and two steel lower guides, three-finger cam, and applied strikes or reinforced openings for 2 point latching. The handle, keeper, and locking bars or rods shall have a chromium finish, and all other components shall have a chromium, nickel, zinc, or cadmium plated finish.

2.1.3 Clothes Hanging Hooks and Rods

Clothes hanging hooks and rods shall be chromium plated or zinc-coated steel.

2.1.4 Silencers

Silencers of rubber or similar resilient material shall be provided on door frames at close proximity to each latching point to minimize noise when the door is closed. Silencers shall be replaceable.

2.2 STEEL SHEETS

Steel sheets shall be cold-rolled, commercial quality, stretcher level degree of flatness and of manufacturer's standard gauges specified.

2.3 STEEL LOCKER CONSTRUCTION

2.3.1 Workmanship

Sheet metal bends shall be accurately formed. Cut edges shall be straight and smooth. Holes for the reception of mechanical fasteners shall be accurately punched or drilled and have all burrs removed. Butt welds shall extend full width of joining edges, shall be ground smooth and flush with adjacent surfaces when on exterior of lockers. Resistance welds shall be 3/16-inch minimum diameter and maximum spacing of 8 inches on center. Welds shall be thoroughly fused and sound, and shall be free from cracks, fissures, pits, holes, gas pockets, porosity, and undercuttings. There shall be no sharp corners or protrusions of any kind in the final assembled lockers that could be considered harmful to the user or the stored items. Use of mechanical fasteners exposed to exterior of unit shall be limited to those required for application of hardware and scribes.

2.3.2 Base

Base shall be constructed of wood, standard grade 2 by 4 inches, unless noted otherwise.

2.3.3 Back and Side Panels

Back and side panels shall each be formed of sheet steel not lighter than 22 gauge and shall be reinforced if necessary to impart rigidity to unbroken spans.

2.3.4 Front

Front shall be not lighter than 18-gauge steel and multichannel formed as required to provide strength and rigidity to side panels, top, and bottom without exposing fasteners. Front shall be reinforced as necessary to serve as a stable mount and frame for doors and hardware. Fronts formed as part of side panels shall be equivalent to the specified 18-gauge steel multichannel construction. With the door closed, clearance between door edge and frame shall be uniform and shall not exceed 1/8 inch and door face shall be flush with the face of the front.

2.3.5 Top

Top shall be not lighter than 22-gauge steel, flat exterior surface, and formed as required for securing to back, front and sides.

2.3.6 Bottom

Bottom shall be not lighter than 18-gauge steel and formed as required for securing to back, front and sides.

2.3.7 Doors

Doors shall be of double-wall type with not lighter than 22-gauge steel inside panel and not lighter than 20-gauge outside panel separated by lot unless than 3/4 inch of rigid mineral insulation cemented between the panels. Doors shall be reinforced or otherwise prepared for the reception of hardware and to provide strength and rigidity to the doors.

2.3.8 Scribes and Closures

Scribes and closures shall be not lighter than 20 gauge.

2.3.9 Metal Finishes

Finish shall be an approved factory-applied baked-enamel, semigloss finish in accordance with manufacturer's standard finishes. Color will be selected from manufacturer's standard colors from indicated colors in the drawings.

2.4 #.1 NUMBER PLATES

FS AA-L-00486. Aluminum. Provide consecutive numbers beginning with 1.

2.5 STATIC LOAD TESTS

When tested as specified herein, the door, including operation of hardware, shall not bind or otherwise fail and there shall be no failure, cracks, or permanent set exceeding 1/16 inch in any component. Tests shall be performed with the locker in the normal upright position and anchored to simulate an actual installation, except back and sides shall be tested with the locker in the horizontal position with the test surface facing up.

2.5.1 Back and Sides

Each side and the back shall be tested separately using a 75 pound load within the area circumscribed by a 10-inch diameter circle located midway between supports. The load shall be applied for not less than 5 minutes.

2.5.2 Cabinet

The locker cabinet shall be tested using a 100 pound load on the top, a 50 pound load on the hat shelf, a 50 pound load on the clothes hanging rod or hooks, and a 100 pound load on the bottom. Load on the clothes hanging rod shall be hung from the center of the rod, and all other loads shall be within the area circumscribed by a 10-inch diameter circle located midway between supports. The loads shall be applied simultaneously for not less than 5 minutes.

2.5.3 Bottom Front Edge

With the cabinet loads in place, an additional load of 225 pounds shall be applied not less than six times to the center of the bottom front edge to represent a user stepping on and off.

2.5.4 Doors

With the cabinet loads in place a 200 pound test load shall be suspended from the door by a rope located not more than 3 inches back from the latch side of the top edge of the door. In a normal manner the door shall be opened and closed through not less than 150 degrees for not less than six cycles. Counter weights or fastening of the cabinet to prevent tilting or upsetting will be permitted during this test.

2.6 #.1 BENCHES

Bench tops shall be constructed of 9-1/2" x 1-1/4" hardwood with two coats clear lacquer finish. All corners shall be rounded and sanded. Bench pedestals shall be constructed of heavy duty steel tube welded to top and bottom flanges. Bench top shall be securely anchored to pedestal. Pedestal shall be securely anchored to concrete slab, pedestals shall be 16-1/4" high, color as indicated. Benches shall be 48" long with two pedestals minimum.

3 EXECUTION

3.1 INSTALLATION

Double tier lockers shall be assembled and positioned in accordance with the layout shown, set level, and secured in place. Lockers with backs to walls shall be secured to the wall with not less than four fasteners, using one fastener near each corner. Free-standing or island-type installations shall be secured to the floor with not less than four fasteners, using one fastener near each corner. In addition to securing to the floor or wall, lockers which are adjacent to each other, such as a back-to-back or a side-to-side layout, shall be secured to each other. Securing of adjacent lockers shall be with three fasteners located high, low, and intermediate when a side is involved. Securing of adjacent lockers shall be with four fasteners located near the corners when a back-to-back installation is involved. Fasteners to secure metal lockers in place shall penetrate two thicknesses of metal at each locker or shall be provided with washers. There shall be no sharp corners or protrusions in the final assembled lockers that could be considered harmful to the user or stored items. Scribes over 14 inches wide shall be secured to the building construction with concealed fasteners at intervals not to exceed 12 inches on center. Hardware shall be adjusted and left in good working order. Doors shall not stick or bind, but shall operate smoothly and easily. Lockers shall be cleaned and protected from damage until acceptance.

3.2 #.1 NUMBERING SYSTEM

Install number plates on lockers consecutively with odd numbers on top and even numbers on bottom.

--End of Section--

SECTION 10520

FIRE EXTINGUISHER CABINETS AND ACCESSORIES

1 GENERAL

1.1 SHOP DRAWINGS

Submit, for approval, shop drawings or catalog illustrations with descriptive data showing dimensions, construction, thickness of metal, glass and hardware.

1.2 GENERAL REQUIREMENTS

For number, type and location of recesses and cabinets, see drawings. Furnish and install complete and ready for use.

1.2.1 Fire Extinguisher Cabinet and Recess

Fire extinguisher cabinet shall be recessed type, with flat trim and shall be manufacturer's standard size to accommodate one 2-1/2 gallon pressurized water-type extinguisher. Fire extinguisher(s) not in contract.

1.3 SUBMITTALS

The following shall be submitted in accordance with SECTION 01330 SUBMITTAL PROCEDURES:

SD-06 Instructions

Manufacturer's standard product literature and recommendations for installation.

2 PRODUCTS

2.1 SHEET STEEL

Cold-rolled, annealed, stretcher leveled, bonderized or equivalent treatment and cleaned for the finish specified.

2.2 GLASS

Glass shall meet all requirements of Fed. Spec. DD-G-451C, Type II, Class 1, wire glass, double strength, or Type I, Class 1, glazing quality, standard with cabinet manufacturer.

2.3 CONSTRUCTION

2.3.1 Body

Body shall be sheet steel not less than 20 gage; one-piece full-welded with square corners, or seamless front full-welded to back and at corners. Welds shall be continuous in full depth and width dressed smooth on all exposed surfaces. Sides shall be cut, punched, or drilled as necessary to receive hardware.

2.3.2 Door

Door shall be hollow construction sheet steel not less than 20 gage. Rails and stiles of one-piece rolled section mitered and welded at corners, with attached glass retainers on inside, or of two-piece construction pressed from single sheets.

2.3.3 Cleaning

All welds shall be ground smooth. All irregularities in finished surface from welding, cutting, punching, or drilling shall be dressed smooth. All foreign matter shall be removed from finished cabinet prior to painting.

2.4 PAINTING

After cleaning prime concealed and exposed metal surfaces with one coat of baked flat white enamel.

Exposed interior surfaces, in addition to the prime coat, shall receive not less than two coats of white baked enamel finish.

Exposed exterior surfaces, in addition to the prime coat, shall receive not less than two coats of white baked enamel finish.

2.5 HARDWARE

a. Cabinets shall have hinges and catch.

b. Hinges shall be cabinet manufacturer's standard as to material type and finish, permitting door to open 100 degrees.

c. Catch shall be lever handle type, brass or bronze, bright chromium finish over nickel.

3 EXECUTION

Provide two anchors on each jamb, spaced not more than 24 inches apart and adjustable. Anchors shall be a minimum of 2 inches wide, extend 4 inches into masonry, 3 inches into concrete, bolted to steel framing.

--End of Section--

SECTION 10800

TOILET ACCESSORIES

1 GENERAL

1.1 REFERENCES

The publications listed below form a part of this specification to the extent referenced. The publications are referred to in the text by basic designation only.

AMERICAN SOCIETY FOR TESTING AND MATERIALS (ASTM)

ASTM C 1036	(1991) Flat Glass

COMMERCIAL ITEM DESCRIPTIONS (CID)

CID A-A-2380	(Basic) Dispenser, Paper Towel
CID A-A-2398	(Rev B) Curtain, Shower and Window (Metric - SI)

1.2 SUBMITTALS

Government approval is required for submittals with a "GA" designation, submittals having an "FIO" designation are for information only. The following shall be submitted in accordance with Section 01330 SUBMITTAL PROCEDURES:

SD-01 Data

Finishes; FIO. Accessory Items; FIO.

Manufacturer's descriptive data and catalog cuts indicating materials of construction, fasteners proposed for use for each type of wall construction, mounting instructions, and operation instructions.

SD-14 Samples

Finishes; GA. Accessory Items; GA.

One sample of each accessory proposed for use. Approved samples may be incorporated into the finished work, provided they are identified and their locations noted.

1.3 DELIVERY, STORAGE, AND HANDLING

Toilet accessories shall be wrapped for shipment and storage, delivered to the jobsite in manufacturer's original packaging and stored in a clean, dry area protected from construction damage and vandalism.

2 PRODUCTS

2.1 MANUFACTURED UNITS

Toilet accessories shall be provided where indicated in accordance with paragraph SCHEDULE. Each accessory item shall be complete with the necessary mounting plates, shall be of sturdy construction with corrosion resistant surface.

2.1.1 Anchors and Fasteners

Anchors and fasteners shall be capable of developing a restraining force commensurate with the strength of the accessory to be mounted and shall be suited for use with the supporting construction. Exposed fasteners shall have oval heads and shall be finished to match the accessory.

2.1.2 Finishes

Except where noted otherwise, finishes on metal shall be provided as follows:

Metal	Finish
Stainless steel	No. 4 satin finish

2.2 ACCESSORY ITEMS

Accessory items shall conform to the requirements specified below.

2.2.1 Grab Bar (GB)

Grab bar shall be 18 gauge, 1-1/4 inches OD Type 304 stainless steel. Grab bar shall be form and length as indicated. Exposed mounting flange shall have set screw mounting holes concealed on the lip of the flange. Grab bar shall have peened non-slip surface. Installed bars shall be capable of withstanding a 500 pound vertical load without coming loose from the fastenings and without obvious permanent deformation. Space between wall and grab bar shall be 1-1/2 inch.

2.2.2 Glass Mirrors (MR)

Glass for mirrors shall be Type I transparent flat type, Class 1-clear. Glazing Quality q1 1/4 inch thick conforming to ASTM C 1036. Glass color shall be clear. Glass shall be coated on one surface with silver coating, copper protective coating, and mirror backing paint. Silver coating shall be highly adhesive pure silver coating of a thickness which shall provide reflectivity of 83 percent or more of incident light when viewed through 1/4 inch thick glass, and shall be free of pinholes or other defects. Copper protective coating shall be pure bright reflective copper, homogeneous without sludge, pinholes or other defects, and shall be of proper thickness to prevent "adhesion pull" by mirror backing paint. Mirror backing paint shall consist of two coats of special scratch and abrasion-resistant paint and shall be baked in uniform thickness to provide a protection for silver and copper coatings which will permit normal cutting and edge fabrication.

2.2.3 Combination Paper Towel Dispenser/Waste Receptacle Units (PTDHC)

Dispenser/receptacle shall be semi-recessed and shall have a capacity of 400 sheets of C-fold, single-fold, or quarter-fold towel. Waste receptacle shall be designed to be locked in unit and removable for service. Locking mechanism shall be tumbler key lock. Waste receptacle shall have a capacity of 12 gallons. Unit shall be fabricated of not less than 0.30 inch stainless steel welded construction with all exposed surfaces having a satin finish. Waste receptacle that accepts reusable liner standard for unit manufacturer shall be provided.

2.2.4 Sanitary Napkin Disposer (SND)

Sanitary napkin disposal shall be constructed of Type 304 stainless steel with removable leak-proof receptacle for disposable liners. Fifty disposable liners of the type standard with the manufacturer shall be provided. Receptacle shall be retained in cabinet by tumbler lock. Disposer shall be provided with a door for inserting disposed napkins, and shall be surface mounted.

2.2.5 Sanitary Napkin and Tampon Dispenser (SNTD)

Sanitary napkin and tampon dispenser shall be surface mounted. Dispenser, including door shall be Type 304 stainless steel and shall dispense both napkins and tampons with a minimum capacity of 20 each. Dispensing mechanism shall be for coin operation. Coin mechanisms shall be field changeable by adjusting pins for new coin designation. Coin mechanisms shall have minimum denominations of 10 cents and 25 cents. Doors shall be hung with a full-length corrosion-resistant steel piano hinge and secured with a tumbler lock. Keys for coin box shall be different from the door keys.

2.2.6 Shower Curtain (SC)

Shower curtain shall conform to CID A-A-2398, Style I, size to suit conditions.

2.2.7 Shower Curtain Rods (SCR)

Shower curtain rods shall be Type 304 stainless steel 1-1/4 inch OD by 0.049 inch minimum straight to meet installation conditions.

2.2.8 Soap Dispenser (SD)

Soap dispenser shall be surface mounted, liquid type consisting of a vertical Type 304 stainless steel tank with holding capacity of 40 fluid ounces with a corrosion-resistant all-purpose valve that dispenses liquid soaps, lotions, detergents and antiseptic soaps.

2.2.9 Soap Holder (SH)

Soap holder shall be surface mounted Type 304 stainless steel. Separate supports shall be stainless steel.

2.2.10 Towel Pin (TP)

Towel pin shall have concealed wall fastenings, and a pin integral with or permanently fastened to wall flange. Maximum projection shall be 4 inches. Design shall be consistent with design of other accessory items.

2.2.11 Toilet Tissue Dispenser (TTD)

Toilet tissue holder shall be Type II - surface mounted with two rolls of tissue mounted horizontally. Cabinet shall be stainless steel, satin finish.

3 EXECUTION

3.1 INSTALLATION

Toilet accessories shall be securely fastened to the supporting construction in accordance with the manufacturer's approved instructions. Accessories shall be protected from damage from the time of installation until acceptance.

END OF SECTION

SECTION 11132

PROJECTION SCREENS

1 GENERAL

1.1 SUMMARY

A. Extent of projection screen is shown on drawings.

B. Type of projection screen required: Front projection screen, electrically operated.

C. Electrical wiring, connections and installation of remotecontrol switches for electrically operated projection screens are specified in Division-16 sections.

1.2 QUALITY ASSURANCE

A. Single Source Responsibility

Projection screen required from a single manufacturer as complete unit, including necessary mounting hardware and accessories.

B. Fire Performance Characteristics

Provide projection screen fabricate identical to those materials which have undergone testing and passed requirements for flame resistance as indicated below.

1. Federal Standard 191A/5903 for test methods.
   FS GG-S-00172D(1) for flame resistance.

C. Mildew Resistance

Provide mildew resistant screen fabric as determined by Federal Standard 191A/5760.

1.3 SUBMITTALS

SD-01 Product Data

Submit manufacturers product data for screen indicated.

SD-06 Wiring Diagram

Submit manufacturer's wiring diagram for electrically-operated unit.

1.4 DELIVERY, STORAGE AND HANDLING

A. Do not deliver projection screen until other work withinthe space where screen will be installed is substantially complete, and installation of screen is ready to take place.

B. Protect screens from damage during delivery, handling,storage and installation.

2 PRODUCTS

2.1 FRONT PROJECTION SCREEN, ELECTRICAL OPERATED

A. General

Provide manufacturer's standard UL-listed and marked units consisting of case, screen, motor, controls, mounting accessories and other components as required for complete installation and complying with requirements indicated for screen surface, controls and for case, motor and screen under description of operation and type.

B. Viewing Surface of Screen

Comply with the following requirements for type of viewing surface.

1. Glass beaded viewing surface with minimum gain characteristic complying with FS GG-S-0017D29(1) for Type C screen surface.

2. Edge Treatment: Black masking boarders.

3. Bottom Treatment: Fabric shall be formed into a protect holding a 3/8" diameter metal rod.

C. Screen Controls

Remotely control operation of screen as follows:

1. Single Station Control: Three-position UL-listed control switch for the screen with metal device box and cover plate for flush wall mounting and for connection to 115 VAC electrical power supply.

D. Motor-in-Roller-Operated Screens

Units designed and fabricated for recessed or surface installation and complying with the following requirements:

1. Screen Case: Fabricated in one piece from 22-gage steel with flat back design with baked-enamel finish, with end caps forming mounting brackets.

a. Motor: Instant reversing motor of size and capacity recommended by screen manufacturer with permanently lubricated ball bearings,. automatic thermal overload protection, preset limit switches to automatically stop screen in "up" and "down" position, and positive stop action to prevent coasting: mounted inside roller with vibration insulators to reduce noise transmission and remotely controlled.

2. Screen

Mildew-and flame-resistant polyvinyl fabric with viewing surface complying with requirements indicated, with top edge mounted on,.and securely anchored to 3: diameter rigid metal roller supported by vibration and noise absorbing supports and

bottom edge formed into a pocket holding a /98" diameter metal rod, with ends of rod protected by metal caps.

3. Size of Viewing Surface

6'H x 6'W

E. Available Products

Subject to compliance with requirements projection screens which may be incorporated in the work include, but are not limited to the following:

Motor-in-Roller-Operated Screens:

"Cosmopolitan"; D-Lite Screen Co., Inc.

3 - EXECUTION

3.1 INSTALLATION

A. General

Install projection screen at location indicated in compliance with screen manufacturer's instructions.

1. Install front projection screen with screen case in position and relationship to adjoining work indicated, securely anchored to supporting substrate, and in a manner which produces a smoothly operating screen with plumb and straight vertical edges and plumb and flat viewing surfaces when lowered.

2. Test electrically-operated units to verify that screen, controls, limit switches, and other operating components are in optimum functioning condition.

3.2 PROTECTION

A. General

Protect projection screens after installation from damage during construction. If despite such protection, damage occurs, remove and replace damaged components or entire unit as required to restore units to their original, undamaged condition.

--End of Section--

SECTION 12390

CABINETS AND COUNTERTOPS

1 GENERAL

1.1 REFERENCES

The publications listed below form a part of this specification to the extent referenced. The publications are referred to in the text by basic designation only.

BUILDERS HARDWARE MANUFACTURERS ASSOCIATION (BHMA)

BHMA A156.9	(1994) Cabinet Hardware

KITCHEN CABINET MANUFACTURERS ASSOCIATION (KCMA)

KCMA A161.1	(1995) Recommended Performance & Construction Standards for Kitchen and Vanity Cabinets

NATIONAL ELECTRICAL MANUFACTURERS ASSOCIATION (NEMA)

NEMA LD 3	(1991) High-Pressure Decorative Laminates

1.2 DESIGN

Cabinets shall be wood, factory-fabricated and finished in the manufacturer's standard sizes and finishes of the type, design, and configuration indicated. Cabinets shall be constructed as specified and shall meet the requirements of KCMA A161.1. Wall and base cabinet assemblies shall consist of individual units joined into continuous sections. Fastenings shall be accomplished to permit removal and replacement of individual units without affecting the remainder of the installation. Counters shall be provided with watertight sink rim when indicated. Drawers shall be removable and shall be equipped with position stops to avoid accidental complete withdrawals. Shelves shall be fixed or adjustable as indicated.

1.3 SUBMITTALS

Government approval is required for submittals with a "GA" designation; submittals having an "FIO" designation are for information only. The following shall be submitted in accordance with Section 01330 SUBMITTAL PROCEDURES:

SD-01 Data

Cabinets and Countertops; GA.

Manufacturer's printed data, catalog cuts, and installation instructions.

SD-04 Drawings

Cabinets and Countertops; GA.

Drawings showing each type of cabinet and related item, and clearly indicating the complete plan and elevations of the cabinets and accessories and pertinent details of construction, fabrication, and attachments.

SD-09 Reports

Cabinets and Countertops; GA.

Test reports shall certify that all cabinets comply with the requirements of KCMA A161.1. Tests shall be conducted by independent laboratories approved by KCMA. KCMA certification seals affixed to the cabinets will be accepted in lieu of certified test reports.

SD-14 Samples

Cabinets and Countertops; GA.

In lieu of individual samples, complete minimum size cabinets may be furnished as samples. Mock-up units are not acceptable. Samples shall be of sufficient size to show color pattern and method of assembly.

a. Counter top and backsplash - One section, containing both.

b. Door and drawer front - One of each, with hardware mounted.

c. Plastic laminate color samples shall be approximately 2" x 3" size.

d. Stain/color samples shall be approximately 2" x 3" size.

1.4 DELIVERY AND STORAGE

Cabinets shall be delivered to the jobsite wrapped in a protective covering. Cabinets shall be stored in an adequately ventilated, dry location that is free of dust, water, or other contaminants and in a manner to permit access for inspection and handling. Cabinets shall be handled carefully to prevent damage to the surfaces. Damaged items that cannot be restored to like-new condition shall be replaced.

2 PRODUCTS

2.1 CABINETS

Wall and base cabinets shall be of the same construction and same outside appearance. Door design shall be solid flush face. Corner cabinets shall be equipped with notched shelving as indicated. Shelves shall be fixed or fully adjustable as indicated. Adjustable shelves shall be capable of adjusting on approximately 1-1/4 inch increments. Shelves shall be supported by self-locking clips or wood dowels. Dowels shall be approximately 5/16 inch in diameter by 1-9/16 inches long. Dowels shall be inserted into borings for the shelf adjustments. Shelves shall be minimum 1/2 inch thick plywood. Drawer fronts shall be 5/8 inch thick, 5 ply hardwood plywood.

2.1.1 Frameless Type Cabinets

The cabinets shall be of frameless design and construction. Cabinets shall be constructed of minimum 5/8 inch thick, 45 pound density particle board

end and floor panels. Cabinet back shall be constructed of minimum 3/16-inch thick, 45 pound density particle board. Hanging rails shall be doweled and glued to end panels, then fastened and hot melt glued to cabinet back. Toe kick plates shall be recessed, doweled and glued to the end panels. Top and bottom corners shall be braced with either hardwood blocks glued together with water resistant glue and nailed in place, or fastened with metal or plastic corner braces.

2.2 COUNTERTOPS AND BACKSPLASH

2.2.1 General

Countertop and backsplash shall be constructed of 3/4 inch thick plywood or 3/4 inch thick, 45 pound density particle board core and shall be post formed cove type or fully formed type. Cove type shall be a single unit with self-edging and plastic laminate coved at the juncture of the countertop and backsplash. Fully formed type or square edge shall be a unit with shaped edges using wood nose molding at counter edge and shall include a separate backsplash. Backsplash shall be not less than 3-1/2 inches high. Edging and trim shall consist of plastic laminate cut and fitted to all exposed edges. End splashes constructed of 3/4 inch plywood or 3/4 inch thick, 45 pound density particle board core shall be supplied.

2.2.2 Sink Rims

Sink rims shall be of the corrosion resistant steel clamping type, sized to the sink, and a standard product of a manufacturer regularly producing this type of equipment.

2.3 FINISH

2.3.1 Cabinet Finish

Cabinets shall be provided with a plastic laminate finish, color and pattern as indicated. Exposed exterior surfaces shall be plastic laminate finish. Colors and patterns shall be as indicated.

2.3.2 Melamine Laminated Finish on Cabinet Interiors

All exposed interior surfaces shall be of plywood or particle board cabinet backs and shall be finished with a melamine laminate on the exposed side. Particle board shelves shall be covered on both sides with a laminated melamine finish. Melamine laminate shall conform to the requirements of NEMA LD 3 and laminate adhesive shall be contact type applied to both surfaces. Design, color, and finish shall be of a type standard with the manufacturer.

2.3.3 Plastic Laminates on Countertops

Continuous sheets of longest lengths practicable shall be provided. Joints in surface sheeting shall be tight and flush and held to a practicable minimum. When the countertop and backsplash are two separate units, GP50 plastic laminate shall be used. When the countertop and backsplash are one unit, PF42 plastic laminate shall be used. Plastic laminate shall conform to the requirements of NEMA LD 3 and plastic laminate adhesive shall be contact type applied to both surfaces. For fully formed and cove type countertops, the post-forming plastic laminate shall not be bent to a radius

smaller than the limit recommended by the plastic manufacturer. Pattern, color, finish, and grade shall be as indicated.

2.3.4 Backer Sheets

Backer Sheets of high pressure plastic laminate, shall conform to NEMA LD 3, Grade BK20 and shall be applied to the underside of all core material. Design, color, and finish shall be as indicated.

2.4 #.1 HIGH-PRESSURE DECORATIVE LAMINATE (HPDL)

NEMA LD 3, satin finish, unless otherwise indicated.

2.5 #.1 COUNTERTOPS

PF 42, satin finish.
GP 50, satin finish.

2.6 #.1 VERTICAL SURFACES

GP 28 or PF 30, satin finish.

2.7 #.1 BACKING SHEET

BK 20.

2.8 #.1 CABINET LINER

CL 20.

2.9 #.1 STAINLESS STEEL COUNTERTOPS

Countertops shall be stainless steel, 14 GA, type 316L. All welded joints and seams shall be ground smooth. Provide concealed fastenings from underside of countertops to attach countertops to base cabinets. Countertop support brackets shall be stainless steel, type 316L and miscellaneous other concealed metal parts shall be furniture steel, welded, degreased, cleaned, treated, and powder painted in dove grey.

2.10 HARDWARE

Hardware shall conform to BHMA A156.9, shall be suitable for kitchen cabinet use, and shall include all miscellaneous hardware for a complete installation. Door hinges shall be self-closing type. Drawer runners shall have nylon rollers standard with the manufacturer. Hardware and fastenings for doors and drawers with particle board cores shall be of the through-bolt type. The types and finishes of hardware shall be as follows:

	BHMA DESIGNATION	
TYPE	NUMBER	FINISH
Drawer Slides	B05051	Optional
Wirepulls 4 inches	B02011	Chromium
Hinges	B01511	Chromium

3 EXECUTION

3.1 INSTALLATION

Cabinets shall be installed level, plumb, and true to line, and shall be attached to the walls or floors with suitable devices to securely anchor each unit. Countertops, accessories, and hardware shall be installed as indicated. Installation shall be in accordance with the manufacturer's approved printed instructions. The inner edge of sink cut-outs in laminated plastic tops shall be painted with a coat of semigloss enamel paint and sink flanges shall be set in a bed of sealant. Closer and filler strips and finish moldings shall be provided as required. Prior to final acceptance, doors shall be aligned, hardware adjusted, and cabinets left in a clean neat condition.

END OF SECTION

SECTION 12520

WINDOW TREATMENT

1 GENERAL

1.1 REFERENCES

The publications listed below form a part of this specification to the extent referenced. The publications are referred to in the text by basic designation only.

FEDERAL SPECIFICATIONS (FS)

FS AA-V-00200	(Rev B) Venetian Blinds

NATIONAL FIRE PROTECTION (NFPA)

NFPA 701	(1996) Methods of Fire Test for Flame-Resistant Textiles and Films

1.2 GENERAL

Window treatment shall be provided, complete with necessary brackets, fittings, and hardware. Each window treatment type shall be a complete unit provided in accordance with paragraph WINDOW TREATMENT PLACEMENT SCHEDULE. Equipment shall be mounted and operated as indicated. Windows to receive a treatment shall be completely covered. The Contractor shall take measurements at the building and shall be responsible for the proper fitting and hanging of the equipment.

1.3 SUBMITTALS

Government approval is required for submittals with a "GA" designation; submittals having an "FIO" designation are for information only. The following shall be submitted in accordance with Section 01330 SUBMITTAL PROCEDURES:

SD-01 Data

Window Treatments and Hardware; FIO.

Manufacturer's data composed of catalog cuts, brochures, product information, and maintenance instructions.

SD-04 Drawings

Window Treatments and Hardware; GA.

Drawings showing fabrication and installation details. Drawings shall show layout and locations of track, direction of draw, mounting heights, details, and manufacturers' wiring diagram for electrically operated draw curtains.

SD-14 Samples

Window Treatments and Hardware; GA.

Three samples of each type and color of window treatment. Blind slats or louvers shall be 6 inches in length for each color. Track shall be 6 inches in length. Shade material shall be minimum 6 by 6 inches in size.

1.4 DELIVERY, STORAGE, AND HANDLING

Components shall be delivered to the jobsite in the manufacturer's original packaging with the brand or company name, item identification, and project reference clearly marked. Components shall be stored in a dry location that is adequately ventilated and free from dust, water, or other contaminants and shall have easy access for inspection and handling. Materials shall be stored flat in a clean dry area with temperature maintained above 50 degrees F.

1.5 FIELD MEASUREMENTS

The Contractor shall become familiar with details of the work, verify dimensions in the field, and shall advise the Contracting Officer of any discrepancy before performing the work.

1.6 WARRANTY

Manufacturer's standard performance guarantees or warranties that extend beyond a 1 year period shall be provided.

2 PRODUCTS

2.1 WINDOW BLINDS

Each blind, including hardware, accessory items, mounting brackets and fastenings, shall be provided as a complete unit produced by one manufacturer. All parts shall be one color unless otherwise shown, and match the color of the blind slat. Steel features shall be treated for corrosion resistance.

2.1.1 Horizontal Blinds

Horizontal blinds shall conform to FS AA-V-00200, Type II (1 inchslats), except as modified below. Blind units shall be capable of nominally 180 degree partial tilting operation and full-height raising. Blinds shall be inside mount.

2.1.1.1 Head Channel and Slats

Head channel shall be steel or aluminum nominal 0.024 for Type II. Slats shall be aluminum, not less than 0.008 inch thick, and of sufficient strength to prevent sag or bow in the finished blind. A sufficient amount of slats shall be provided to assure proper control, uniform spacing, and adequate overlap.

2.1.1.2 Controls

The slats shall be tilted by a transparent tilting wand, hung vertically by its own weight, and shall swivel for easy operation. The tilter control shall be of enclosed construction. Moving parts and mechanical drive shall be made of compatible materials which do not require lubrication during

normal expected life. The tilter shall tilt the slats to any desired angle and hold them at that angle so that any vibration or movement of ladders and slats will not drive the tilter and change the angle of slats. A mechanism shall be included to prevent over tightening. The wand shall be of sufficient length to reach to within 5 feet of the floor.

2.1.1.3 Intermediate Brackets

Intermediate brackets shall be provided for installation of blinds over 48 inches wide and shall be installed as recommended by the manufacturer.

2.2 WINDOW SHADES

Roller tube shall operate smoothly and be of sufficient diameter and thickness to prevent excessive deflection. Brackets shall be provided that are appropriate for inside mount. The shade cloth shall meet the performance described in NFPA 701, small scale test. Steel features shall be treated for corrosion resistance.

2.2.1 Room Darkening Shades

Room darkening (black-out) window shades shall conform to the following: Roller tube shall be aluminum and shall be controlled by webbing tape. Light traps shall be shop fabricated, and shall consist of a head box to house the shade roller, and U-shaped channels to serve as guides for the shade along the sides and to receive the bottom edge of the shade along the sill. Light trap shall be made of sheet steel having a minimum thickness of 22 gauge or anodized, extruded, aluminum. The legs of the channels shall be not less than 1-3/4 inches long and separated by the minimum distance that will permit free operation of the shade. Edges of light trap coming into contact with the shade cloth shall be smooth pile light seal. The exposed face of the head box shall be hinged or removable for access to the shade roller. The interior or unexposed surfaces of the light trap shall have a finish coat of flat black enamel. The exposed portions of the light trap shall have a factory-applied priming coat of gray paint. Finish painting is specified in Section 09900 PAINTING, GENERAL. Shade roller shall be manufacturer's standard product. Cloth shall be of type for blackout purposes. The shade shall be made from a single piece of canvas duck cloth laminated to vinyl. When not finished with a selvage, the vertical edges of the shade shall be bound or hemmed using a high-grade thread. Needle holes shall be made lightproof by applying a suitable filler. The bottom edge of the shade shall be fitted with a steel operating bar. Shades will engage positively with bottom rail through operating bar or chain pull. Bars shall be painted with flat black enamel. Pull cords shall be made of No. 4 braided nylon or beaded chain having not less than 175 pounds breaking strength.

2.3 #.1 MOTOR OPERATED DRAW CURTAINS

Draw curtain cloth shall be a lightproof laminate of cloth over a dense backing. Color and pattern shall be selected from the manufacturer's standard colors and patterns. Curtains shall be sized to give a minimum of 100 percent fullness horizontally and to extend from the track to 1-inch above the floor. Raw edges or selvages shall not be left exposed. Cloth widths shall be sewn with straight French seams. Heading shall be pleated with a minimum of 4-inch permanent finish crinoline interfacing for properly securing hooks to each pleat. At the option of the Contractor, a 3-1/2 inch

wide heavy woven cotton heading tape with pockets for inserting 4-prong hooks of the same length may be used to form the heading and the pleats. Side hems shall be 2 inches wide and bottom hems 4 inches wide. Buckshot weight tape shall be sewn into the bottom of each side hem. Light traps shall be made of the same cloth as the curtaim material. Fixed-lap curtains shall be fastened at the jambs and shall overlap movable curtains at least 9 inches. A fixed valance of the same cloth as the curtain shall be fastened to the track and shall overlap movable curtains by at least 6 inches. Traverse tracks shall be heavy-duty steel with baked enamel finish, or heavy-duty channel extruded aluminum. End stops, brackets, splicers, and shields shall be of the same metal and shall have the same finish as the traverse tracks. Carrier shall be short-loop type with double rollers of stainless steel or nylon. Master carriers, end pulleys, and floor pulleys shall be aluminum with nylon or stainless steel wheels. Curtain hooks shall be chrome- or nickel-plated brass, 3 inches long where crinoline interfacing is used, and 4-prong hooks where heading tape is used.

2.4 #.1 MOTOR AND CONTROLS

Provide manufacturer's standard UL-listed and marked units consisting of motor, controls, mounting accessories, and other components as required for complete installation and complying with requirements indicated for controls and for motor under description of operation and type.

Remote control operation of draw curtains shall be:
Single Station Control: Decorator style three-position UL-listed control switch for the draw curtains with metal device box and ivory switch and cover plate for flush wall mounting and for connection to 115 VAC electrical power supply.

Concealed motor shall be:
Motor: Instant reversing motor of size and capacity recommended by draw curtain manufacturer with permanently lubricated ball bearings, automatic thermal overload protection, preset limit switches to automatically stop in "open" and "closed" position, and positive stop action to prevent coasting; mounted inside roller with vibration insulators to reduce noise transmission and remotely controlled.

2.5 COLOR

Color shall be as follows:
Horizontal blinds - off white
Room darkening shades - shall match WF-1
Draw curtains - shall match WF-1

3 EXECUTION

3.1 WINDOW TREATMENT PLACEMENT SCHEDULE

Window covering shall be provided as follows:
Horizontal blinds shall be provided at all exterior windows of primary building (except Rooms 227 and 228) and at interior window of Conference Room 211. Drapery hardware and drapes shall be provided at glazed projection screen in Briefing Room 227. Room darkening shades shall be provided at exterior windows in Rooms 227 and 228.

3.2 INSTALLATION

Installation shall be in accordance with the approved detail drawings and manufacturer's installation instructions. Units shall be level, plumb, secure, and at proper height and location relative to window units. The Contractor shall furnish and install supplementary or miscellaneous items in total, including clips, brackets, or anchorages incidental to or necessary for a sound, secure, and complete installation. Installation shall not be initiated until completion of room painting and finishing operations. Upon completion of the installation, window treatments shall be adjusted for form and appearance, shall be in proper operating condition, and shall be free from damage or blemishes. Damaged units shall be repaired or replaced by the Contractor as directed by the Contracting Officer.

END OF SECTION

SECTION 12675

FLOOR MAT AND FRAME

1 GENERAL

1.1 REFERENCES

The publications listed below form a part of this specification to the extent referenced. The publications are referred to in the text by the basic designation only.

AMERICAN SOCIETY FOR TESTING AND MATERIALS (ASTM)

ASTM B 221	(1990) Aluminum and Aluminum-Alloy Extruded Bar, Rod, Wire, Shape, and Tube

1.2 GENERAL

The mat recesses shall be protected by a plywood filler during construction. The link mat shall be installed when there is no longer danger of damage from construction operations.

1.3 SUBMITTALS

Government approval is required for submittals with a "GA" designation; submittals having an "FIO" designation are for information only. The following shall be submitted in accordance with Section 01330 SUBMITTAL PROCEDURES:

SD-14 Samples

Mat; GA.

2 PRODUCTS

2.1 FRAME

Frame shall be fabricated of aluminum extrusion conforming to ASTM B 221, alloy 6063, temper T5. The frame shall be furnished complete with concrete anchors, corner splices, etc., as required for recessed installation. The frame shall be of the universal type to accept the mat on one side and to accept a variety of floor finishes on the other side, and to provide a controlled recess depth for a flush, continuous walking surface.

2.2 MAT

Mat surface shall be carpet inserts having fusion bonded cut pile. Inserts shall be locked into treadrails. Treadrails shall be fabricated from 6063-T5 aluminum alloy and joined in a continuous hinge system to allow easy roll-up. Colors shall be as follows:

Treadrail, standard bronze anodized.

Carpet insert as indicated on the drawings.

3 EXECUTION

3.1 INSTALLATION

Frame shall be installed square and true to line to accommodate the mat. Frame shall be oriented to accommodate the required floor finish adjacent to the mat.

END OF SECTION

SECTION 12705

PREWIRED WORKSTATIONS

PART 1 GENERAL REQUIREMENTS

1.1 REFERENCES

The publications listed below form a part of this specification to the extent referenced. The publications are referred to in the text by the basic designation only.

AMERICAN NATIONAL STANDARDS INSTITUTE (ANSI)

ANSI Z97.1	(1984; R 1994) Safety Glazing Materials Used in Buildings

AMERICAN SOCIETY FOR TESTING AND MATERIALS (ASTM)

ASTM C 423	(1990a) Sound Absorption and Sound Absorption Coefficients by the Reverberation Room Method
ASTM C 1048	(1992) Heat-Treated Flat Glass - Kind HS, Kind FT Coated and Uncoated Glass
ASTM E 84	(1996a) Surface Burning Characteristics of Building Materials
ASTM E 290	(1992) Semi-Guided Bend Test for Ductility of Metallic Materials

BUSINESS AND INSTITUTIONAL FURNITURE MANUFACTURERS ASSOCIATION (BIFMA)

BIFMA ANSI/BIFMA X5.5	(1989) Desk Products - Tests
BIFMA ANSI/BIFMA X5.6	(1993) Panel Systems - Tests

ELECTRONIC INDUSTRIES ASSOCIATION (EIA)

EIA SP 2950	(1996) Commercial Building Standard for Telecommunications Pathways and Spaces

NATIONAL ELECTRICAL MANUFACTURERS ASSOCIATION (NEMA)

NEMA WD 1	(1983; R 1989) General Requirements for Wiring Devices
NEMA WD 6	(1988) Wiring Devices - Dimensional Requirements

NATIONAL FIRE PROTECTION ASSOCIATION (NFPA)

NFPA 70	(1996) National Electrical Code
NFPA 101	(1997) Life Safety Code

NFPA 255	(1996) Method of Test of Surface Burning Characteristics of Building Materials

UNDERWRITERS LABORATORIES (UL)

UL 723	(1996) Test for Surface Burning Characteristics of Building Materials
UL 1286	(1993; Rev through Jul 1996) Office Furnishings

1.2 GENERAL

This specification establishes the minimum requirements for the acquisition and installation of a complete and usable system of workstations composed of core units, supporting components, electrical hardware, communications, and accessories. Workstation requirements and configurations shall be in accordance with the furniture layout and typical workstation types shown in drawings and specified herein. Components and hardware shall be provided by a single manufacturer and shall be a standard product as shown in the most recent published price lists or amendments. Electrical components shall be products of a single manufacturer to the extent practicable (different types of components may be of different manufacturers, but all units of a given component shall be from a single source). The completed installation shall comply with NFPA 70 and NFPA 101 as shown. The Contractor shall coordinate the work of this section with that to be performed under other sections. This specification may include requirements, which are not manufactured by the furniture manufacturer; any such requirements shall be furnished by the Contractor under this section.

1.3 SUBMITTALS

Government approval is required for submittals with a "GA" designation; submittals having an "FIO" designation are for information only. The following shall be submitted in accordance with Section 01330 SUBMITTAL PROCEDURES:

SD-01 Data

Manufacturer's Product Data; GA.

Manufacturer's product and construction specifications, which provide technical data for pre-wired workstation core units and components specified, including task lighting and illumination performance information. Literature shall include adequate information to verify that the proposed product meets the specification.

SD-04 Drawings

Pre-wired Workstations; GA.

Drawings showing the proposed pre-wired workstation installation at a scale of 1/4 inch = 1 foot, unless otherwise specified. Drawings showing communications, electronic data processing (EDP) and local area network (LAN) locations may be provided as a separate submittal from remaining workstation drawings. Drawing requirements, which are the pre-wired

furniture manufacturer's responsibility shall be provided as a single submittal.

a. Overall reference drawings: Drawings showing workstation locations and overall plan view within each floor. The scale shall be 1/8 inch = 1 foot. Layouts shall reflect field-verified conditions.

b. Installation drawings: Drawings showing workstations, core units, components, and plan view within each floor. Workstations shall be identified by workstation type. Scale of drawings shall be identical to architectural plans. Installation drawings shall reflect field-verified conditions.

c. Workstation elevations: Dimensioned workstation elevations showing each type of workstation with all components identified with manufacturers' catalog numbers. Elevations shall be drawn at 1/2 inch = 1 foot scale.

d. Core Unit drawings: Core unit drawings showing core unit locations and critical dimensions from finished face of walls, columns, core units including clearances and aisle widths. Core units shall be keyed to a legend which shall include width, height, finishes and fabrics (if different selections exist within a project), power or non-power, core unit connectors and wall mount hardware. Core unit drawings shall reflect field-verified conditions.

e. Core unit electrical power drawings: Drawings showing power provisions including type and location of feeder components (service entry poles, base or ceiling feeds), activated outlets and other electrical components. Wiring configuration (circuiting, switching, internal and external connections) shall be identified and a legend provided as applicable.

f. Wire management capacity drawings.

g. Core unit communication drawings showing telephone provisions: Drawings indicating the type and location of feeder components and outlets with wiring configuration identified where applicable.

h. Core unit communication drawings showing electronic data processing provisions: Drawings indicating the type and location of feeder components, outlets, or accessories with wiring configuration identified where applicable.

i. Core unit communication drawings showing local area network provisions: Drawings indicating the type and location of feeder components and data outlets with extra ports for future expansion with wiring configuration identified where applicable.

SD-07 Schedules

Parts List; FIO.

One complete listing of part/model numbers for all components to be furnished, including names and codes of components referenced on drawings.

SD-08 Statements

Qualifications; FIO.

One statement indicating that the manufacturer has specialized in commercial pre-wired workstation manufacturing for the past 5 years.

SD-09 Reports

Selected Components; GA. Core Unit Acoustics; GA. Fire Safety; GA. Electrical System; GA.

One complete set of test reports for the proposed system.

SD-13 Certificates

Certificate of Compliance; FIO.

Two complete sets of certificates attesting that the proposed pre-wired workstation meets specified requirements. The certificate shall be dated after the award of contract, shall name the project, and shall list specific requirements being certified.

Warranty; GA.

Two copies of the warranty.

SD-14 Samples

Pre-wired Workstations; GA.

Four sets of the following samples. The Government reserves the right to reject any samples that do not satisfy the construction or color requirements. The Contractor shall submit additional samples as required to obtain final approval. Work shall not proceed without sample approval in writing from the Contracting Officer.

a. Core unit, tack board and flipper door fabric. Minimum 6 x 6 inches having labels on the back designating the manufacturer, color, fiber content, fabric weight, fire rating, and use (core unit and/or tack board).

b. Work surface core unit, and component finish. Minimum 2-1/2 x 3 inches having labels on the back designating the manufacturer, material composition, thickness, color, and finish.

c. Screens.

d. Task lights.

SD-19 Operation and Maintenance Manuals

Product Assembly Manual; FIO.

Three sets of assembly manuals describing assembly and reconfiguration procedures

Product Maintenance Manuals; FIO.

Three sets of maintenance manuals describing proper cleaning and minor repair procedures

Electrical Systems Manual; FIO.

Three sets of electrical system manuals describing the functions, configuration, and maintenance of the electrical system (power communications). This material may be included in the above 2 manuals at the Contractor's option.

1.4 QUALIFICATIONS

The manufacturer shall be a company specializing in the production of pre-wired workstations for a minimum of 5 years.

1.5 DELIVERY, STORAGE, AND HANDLING

Components shall be delivered to the job site in the manufacturer's original packaging with the brand, item identification, and project reference clearly marked thereon. Components shall be stored in a dry location that is adequately ventilated and free from dirt and dust, water, and other contaminants, and in a manner that permits easy access for inspection and handling.

1.6 PATTERN AND COLOR

Pattern and color of finishes and fabrics for core units, components, and trim shall be as identified in specifications.

1.7 ALTERNATE DESIGN

Manufacturers who are unable to provide workstations that conform exactly to the furniture layouts and typical workstation types shown in the contract drawings may submit alternate designs for consideration by the Contracting Officer. Alternate designs must meet or exceed the following criteria. Alternate designs that are submitted but do not meet these criteria will be rejected.

1.7.1 Workstation Size and Configuration

The alternate design shall provide workstations and components of the same basic size and configuration shown with only the sizes of the individual components within the workstation changed to meet the standard product of the manufacturer.

1.7.2 Component Requirements

The types of components or elements utilized shall be as shown on the drawings.

1.7.3 Layout

The storage capacity, number of workstations accommodated, width of isles, or workstation layout shall not be reduced.

1.7.4 Panel Wiring Configuration

Alternate configurations must support the circuiting and connection capabilities identified under the provisions pertaining to powered panels of paragraph ELECTRICAL. Generally any alternate will be acceptable which involves only a variation in size or quantity that exceeds the specified configuration.

1.8 WARRANTY

The Contractor shall warrant the pre-wired workstation components for a period of 10 years with the following exceptions: fabrics and other covering materials, and paper handling products shall be guaranteed for 1 year, and task lights shall be warranted for 2 years. Electronic ballasts shall be warranted for 3 years. The electronic ballast warranty shall include a $10 labor allowance for each ballast. The authorized representative of the manufacturer shall sign the warranties. Warranties accompanied by document authenticating the signer as an authorized representative of the guarantor, shall be presented to the Contracting Officer upon the completion of the project. The Contractor shall guarantee that the workstation products and installation are free from any defects in material and workmanship from the data of delivery.

PART 2 PRODUCTS

2.1 GENERAL INFORMATION

Workstation design provided utilizes Steelcase, Inc., Context Systems Furniture. Alternate systems of equal performance may be provided per alternate design criteria (see paragraph “Alternate Design” above).

Furniture shall be listed by General Services Administrative Federal Supply Service Authorized Federal Supply Schedule. Furniture shall have been available on the commercial market for no less than three (3) years.

A freestanding furniture system (no panel dependence) shall be based on desk-like products known as "core units".

2.2 PERFORMANCE AND SAFETY REQUIREMENTS

Core units, connection system, work surfaces, pedestals, shelf units, flipper door units, lateral files, locks, accessories, and miscellaneous hardware shall meet testing as specified. With the exception of ANSI, testing may be completed in a manufacturer's in-house testing laboratory. Component specific requirements are listed in appropriate paragraphs.

2.2.1 Selected Components

Pre-wired workstations shall conform to the requirements of BIFMA ANSI/BIFMA X5.5 and BIFMA ANSI/BIFMA X5.6 and representative items shall be selected for testing based on worst case situations (i.e., the deepest and widest work surface or shelf). The keyboard drawer or shelf test shall be performed applying a 50-lb. load to the center of the keyboard shelf for a period of 5 minutes. Any loosening of attachments, permanent deflection or damage to the operation of the drawer or shelf will be cause for rejection.

2.3 FIRE SAFETY

Components shall meet requirements for flame spread and smoke development as specified by NFPA 101 except as follows. Testing shall have been conducted in accordance with ASTM E 84, UL 723, or NFPA 255 on the entire assembly and each different combination of fabric and interior construction. Component flame spread shall not exceed 25 for Class A and core unit smoke development shall not exceed 50 for Class A.

2.4 GENERAL SAFETY

Pre-wired workstation products shall be free of rough or sharp edges. Core unit components shall have a positive, integral locking device which secures components to the support core units without the use of additional screws or clamps so that the components cannot be accidentally pulled or knocked off the core units.

2.5 ELECTRICAL SYSTEM

Task lights shall be UL approved and shall meet the requirements of NFPA 70. The core unit electrical system shall meet the requirements of UL 1286.

2.6 SCREENS

Screen construction shall be a steel enclosure of fiberglass and fabric covered.

Maximum screen thickness shall be 1 1/2". Screen widths shall be available to match all core unit widths.

Screen acoustical values shall be no less than a NRC of .65 and a STC of 25. A certified laboratory shall conduct the acoustical test for the NRC and STC and the test report shall not be more than three years old.

Screens' widths shall be from 24" to 78". Screen heights shall be 12", 17" and 20" and when used in conjunction with the work surface height they shall create privacy heights of 40", 48" and 65".

Screens shall have the capability of assembly and disassembly in a vertical position and shall be non-progressive (i.e., a centrally located screen can be removed without disassembly of the neighboring screens).

2.7 CORE UNITS/FREESTANDING DESK UNITS

Units shall be freestanding components that include a work surface, supports, back panel and accommodations for cords and cables.

Units shall be available in nominal depths of 24" and 3O". (Verify and list all required widths, but permit reasonable dimensional tolerances where possible). Unit work surface height shall be 28 1/2" to 29 1/2" from the finished floor.

Units shall be available in a variety of lengths from 24" to 78" all in nominal thickness not to exceed 1 1/4".

Unit shall have horizontal cable trough immediately below work surface for end user lay in of wires/cables from/to adjacent workstations.

Core unit leveling glides shall adjust to allow installation on uneven floors.

Access channel behind work surface shall provide a continuous slot for cords and cables.

Units shall have a finished top surface of high-pressure plastic laminate or wood veneer and shall have a smoothly furnished underside. The manufacturer shall verify optional top surface finishes.

The work surface of the core unit shall not be affected by ordinary household solvents, acids, alcohols, or salt solutions and shall be capable of being wiped clean with ordinary household cleaning solutions.

Abutting core units shall mate closely and be at equal heights when used in side-by-side or side-to-end configurations in order to provide a continuous and level work surface.

Grommets or access channel must be able, where required, to provide access to the work surface for cable and electrical cords.

Core units shall be available in assorted optional shapes and sizes to accommodate informal conference configurations.

The freestanding nature of the core units shall accommodate non-modular configurations and allow for "stepping" or "slipping" of workstations as specified on contract drawings.

2.8 PEDESTALS AND LATERAL FILES

Pedestals are freestanding or mobile pedestals as indicated on the contract drawing. Pedestal widths shall be from 7 1/2" to 15".

Leveling glides shall be provided on base of pedestals and lateral files to install pedestals on uneven floors.

Drawers, lateral file drawers and drawer pedestals shall be of steel construction with a factory-baked enamel finish. Color shall match metal trim. Drawer faces may be of plastic construction and shall be securely attached with screws to the steel drawer front. Drawer faces shall match metal trim.

Lateral file fronts shall be of equal construction to the shelf units and flipper door cabinets.

Mobile pedestals must be furnished with internal counterbalance weights to prevent instability and tipping.

All file drawers shall have full-extension ball bearing suspensions that do not expose user to grease or edges/corners that will damage users clothing.

All lateral file drawers shall operate smoothly but shall not open accidentally.

All 6" box drawers shall have a minimum of one drawer divider.

A11 12" file drawers shall be equipped with an adjustable compressor that will hold firmly and upright.

All 12" file drawers shall be equipped with rails or high sides for hanging folders, front-to-back and side-to-side.

Hanging file folders shall be used for letter size, legal size and EDP size files as indicated on the contract drawings.

All drawers within the pedestal shall be lockable by an individual keyed lock in each pedestal.

All lateral file drawers shall be available with individual key-operated locks.

All drawers having load restrictions shall have drawer-loading capacities indicated on gummed stickers visibly located on the inside of the drawers.

The following box drawer options shall be available: pencil or convenience tray, reference shelf, stationary trays and be able to accept more than one divider. Note: if floppy disk storage is in drawer, magnetics should not be used to hold dividers and other devices in place.

2.9 SHELF UNITS AND FLIPPER DOOR CABINETS

Shelves shall be of metal construction with formed edges and a factory-baked enamel finish.

All shelf units and flipper door cabinets shall have a depth of at least 15" to accommodate 3" ring binders and shall span the full length of the supporting work surface.

Shelf unit and flipper door cabinet-supporting columns shall be of metal construction with formed edges and a factory-baked enamel finish.

Shelf units and flipper door cabinets shall be attached to metal supporting columns with metal screws or lock clips. Shelf units and flipper door cabinets shall be capable of supporting a uniform load of 36 lbs. per linear foot.

The underside of all shelf units and flipper door cabinets shall have the same finish and may have the same color as the end support columns and shall accommodate the attachment of task lights.

All shelf units shall have accommodating optional shelf unit or flipper door cabinet accessories.

Flipper doors shall be of metal construction with formed edges.

Flipper door cabinets shall have an exterior finish of factory-baked enamel and an interior finish of factory-baked enamel.

Flipper door units shall be specified with locks.

All flipper doors should be able to be operated by a seated person. Equalizers that prevent doors from pinching when operated from other than center balance points are preferred.

2.10 LOCKS AND KEYING

All drawers, flipper door cabinets, lateral files and file bins shall have keyed locks, unless otherwise noted.

Changeable lock cylinders shall be provided with a minimum of 1 different key options.

All locks within a workstation shall be keyed alike. All workstations shall be individually keyed.

All central wall and storage units, which are grouped together but are not part of a workstation, shall be keyed alike, unless otherwise noted.

Keys and lock cylinders shall be numbered for ease of replacement. A key schedule shall be submitted to the Contracting Officer at project completion.

All locking equipment must be clearly labeled/tagged as to the workstation, key number and its location. For those manufacturers who have removable front locks, this will not be necessary.

2.11 OTHER COMPONENTS AND ACCESSORIES

The Contractor shall provide all brackets, supports, hangers, clips, connectors, adjustable feet, cover plates, stabilizers and other miscellaneous hardware required to provide a completed assemble. The installation of all workstations and workstation components shall be as shown and specified in the contract drawings and specifications.

Wall Tracks shall be provided in pairs where components are indicated to hang on wall surfaces. Tracks shall be of heavy-duty extruded metal finish and color to match freestanding furniture and shall be slotted on 1" centers in heights required.

Tack Boards - the fabric and color shall be coordinated with the core unit fabric and color. Location and size shall be as shown on the contract drawings.

Transaction Counters shall be provided in accordance with the sizes and locations shown on the contract drawings. The finish shall match the finish of the work surfaces unless noted otherwise. Transaction counters shall attach to the core units via the columns.

2.12 ELECTRICAL

Both powered and non-powered core units shall have base raceways capable of distributing power circuits and communication cables. Non-powered core unit bases shall be capable of easy field conversion to powered core unit base without requiring the core unit to be dismantled or removed from the workstation. The system shall use copper cable assemblies, wiring harnesses or electrified bus and shall meet requirements of UL 1286 and NFPA 70, Article 605. Conductors shall consist of 20 amp. 90 degree C, #12 AWG wires or the equivalent in the bus configuration. The label or listing of Underwriter's Laboratories, Inc. will be accepted as evidence that the material or equipment conforms to the applicable standards of that agency.

In lieu of this label or listing, a statement from a nationally recognized, adequately equipped testing agency shall be submitted indicating that the items have been tested in accordance with required procedures of UL and that the materials and equipment comply with contract requirements. Electrical work not addressed in this section shall conform to the requirements of Section 16415 ELECTRICAL WORK, INTERIOR.

2.13 CORE UNIT (RACEWAYS)

Core units shall have hinged or removable covers, which permit easy access to the raceway when required but which are securely mounted and cannot be accidentally dislodged under normal conditions. The raceway shall not extend past either core unit face by more than 1/2 inch. Metal or plastic covers which attach securely to the raceway shall be provided as required and shall match the finish and color of the core unit trim. Raceways in full size over 24 inches powered core units shall have a minimum of 2 knockouts (doors) per side for electrical connections or outlets as indicated elsewhere.

2.14 POWERED CORE UNITS

Powered core units shall be provided as indicated on the drawings. The core units shall have an internal power and communications raceway and the capability of disconnecting and connecting external circuits to the electrified raceway in the core unit. The communications receiving raceway shall have capacity for at least twenty 4-pair category 5 cables. Power and communications wiring may share a common wire way if a metal divider is included to ensure electrical isolation. Doors or access openings shall be included for entry of communications cable. The electrified power raceway shall be of the 8-wire configuration indicated. Unless otherwise indicated, conductors of the 8-wire system shall be allocated as follows: 3 phase, a neutral, an equipment ground, and 1 each dedicated phase, neutral and isolated ground.

2.14.1 Receptacles

Power receptacles shall be provided in the powered core units. Devices shall be placed at the locations indicated on the plans and shall be connected to the designated circuits. Unless otherwise indicated, receptacles shall be 15 amp (NEMA 5-15R) commercial grade conforming to NEMA WD 1 and NEMA WD 6. If receptacles are not interchangeable or will not permit field adjustment of phase and circuit selection, 10 percent spare devices of each type shown on these plans shall be furnished. All receptacles shall be of the duplex configuration; unless otherwise indicated, special use receptacles shall be of the simplex configuration with the blade/pin arrangement identified on the plans. The color of receptacle bodies shall be coordinated with the color of the core unit trim. Isolated ground receptacles shall have distinct markings or be of a different color than other receptacles (orange preferred). Field applied identification shall be permanent; stick-on or non-setting adhesives shall not be used. A minimum of 5 receptacle removal tools shall be provided for systems that require special tools for proper receptacle removal.

2.15 ELECTRICAL CONNECTIONS

2.15.1 Internal Connections

Internal primary raceway-to-primary raceway or primary raceway-to-secondary raceway power connections shall utilize straight or flexible plug/receptacle connector assemblies and shall be installed to provide the powered core unit configurations shown on the drawings. Connection of raceway-to-raceway and installation of power receptacles will be done by Section 12705 Contractor.

2.15.2 Connections to Building Services

External power and communications services shall be supplied to the core units via direct-wired base entry modules. The Section 12705 Contractor shall extend power wiring from the entry modules or core unit bases to the building service in flexible liquid tight conduit, 6 foot maximum. Connection to building services will be done by Division 16 Contractor. The Division 16 Contractor shall provide communications wiring to the entry modules or core unit bases from the building services by. Cord and plug assemblies shall not be used for any portion of external links. Base feed modules shall plug into the end or either side of the raceway at receptacle doors. External wiring shall conform to Section 16415 ELECTRICAL WORK, INTERIOR.

2.16 WIRE MANAGEMENT

Wire management capability shall be provided at all workstations. Actual wire management capacity shall accommodate all cable types specified, including the applicable manufacturer required bending radius at corners. Raceways and interfaces to the raceways in the core units shall be designed to accommodate the bend radius as shown in EIA SP 2950 for Category 5 communication wiring. The capability may be accomplished by cable access cutouts (1 minimum per work surface), covered wire management troughs in vertical end core units, horizontal wiring troughs, internal mid-panel raceways, or rear gaps (between the back edge of the work surface and the facing support core unit). Grommet kits or another suitable finish arrangement shall be provided for all cable cutouts. Accessories for an externally mounted vertical and horizontal wire management and concealment system shall be provided as recommended by the manufacturer. Horizontal wire managers shall be supplied for mounting under all work surfaces. The wire managers shall be attached either to the underside of the work surface or to the vertical core unit without damage to the face of the vertical core unit. Exposed or loose wiring will not be acceptable. Wire managers shall be prefinished and shall secure, conceal, and accommodate outlet cords as well as electrical and communications wiring. Wire channels shall match color of core unit trim, attach to core unit or rail by means of clip-on attachment, and shall conceal wires routed vertically. Power wiring shall be separated from communication wiring by use of separate raceways or by placement of channels in joint use troughs or wire ways.

2.17 TASK LIGHTING

Task light size and placement shall be provided as indicated on the contract drawings. Such lights shall be a standard component of the manufacturer's pre-wired workstation products. Task lights mounted to the underside of overhead shelving shall be the same lengths as the overhead storage unit unless otherwise indicated. The ends of the task light length shall not

extend beyond the edges of the overhead unit. Task lights shall have structurally sound mounting devices, which will prevent accidental displacement, but will allow easy removal and replacement when necessary. Fixtures shall be UL approved for use in the configurations indicated on the drawings.

2.18 CIRCUIT LAYOUT

The circuit layout for workstations shall be as shown on the drawings. Devices shall be connected to the designated circuits in the neutral and ground configurations indicated. Connections shall be made to the building electrical distribution system as shown on the contract drawings and in accordance with Section 16415 ELECTRICAL WORK, INTERIOR.

2.19 LUMINAIRE CONFIGURATION

Luminaires shall be the fluorescent type and shall have prismatic lenses, baffles, or reflector systems configured to minimize glare by shielding the lamp from the view of a seated user. Task lights for each workstation shall provide a minimum of 75-foot candles of light (horizontally measured), without veiling reflections, on the work surface directly below and a maximum of 20 inches from the fixture. All diffusers, grilles or other coverings shall be easily removable to permit cleaning and relamping. Fixtures shall be provided with energy efficient ballasts and lamps as indicated. If the type is not identified on the plans, F32T8 lamps in 4 foot units with electronic ballasts shall be used. Each luminaire shall have an easily accessible on-off switch and one rapid start ballast. A variable intensity control is acceptable if the low setting is equivalent to "off" with zero energy consumption. Multiple switching is also acceptable. Ganged fixtures or shared ballasts shall not be used. Lamps and ballasts shall conform to the requirements of Section 16415 ELECTRICAL WORK, INTERIOR.

2.20 WIRING

Each fixture shall have a 6-foot minimum, factory installed, heavy-duty electrical cord set with a grounded plug. Direct or hard wire connections are not acceptable. Unless otherwise indicated, cords shall be concealed. Provisions shall be built-in within core units or shall utilize field-installed, manufacturer-approved accessories. Cords may be extended through dedicated channels located at any point within core units or may be placed in vertical slots or in the space between core units if held in place by retainers and concealed by a cover plate. Vertical wire managers shall be prefinished and cut to size and shall extend from the task light level down to the top of the work surface below the task light. Each manager shall be attached to a core unit vertical edge or connector strip without damage to the core unit surfaces.

2.21 COMMUNICATIONS

Communications wiring shall be extended to, and installed in, the electrified core units by the Division 16 Contractor as shown on the plans. The Division 16 Contractor shall provide communications outlets at designated locations. Communications work will be performed in conjunction with the installation of the pre-wired workstations. All interfaces must be properly coordinated.

2.22 PRODUCT SAFETY

All core units, screens, storage components, electrical components, hardware and accessory components shall be free of rough or sharp edges.

2.23 FINISHES AND COLORS

All systems furniture core units, screens and components shall be supplied in the finishes as specified. All variances shall require Government approval.

PART 3 EXECUTION

3.1 INSTALLATION

The prewired workstations shall be installed by certified installers in accordance with manufacturer's recommended installation instructions. Workstation components shall be installed level, plumb, square, and with proper alignment with adjoining furniture. The components shall be securely interconnected and securely attached to the building where required. Three sets of special tools and equipment necessary for the relocation of core units and other components shall be furnished.

3.2 CLEANING

Upon completion of installation, all products shall be cleaned and polished and the area shall be left in a clean and neat condition. Any defects in material and installation shall be repaired, and damaged products that cannot be satisfactorily repaired shall be replaced.

3.3 COORDINATION

Fully coordinate furniture system installation with the Contracting Officer and other trades, including Division 16 Contractors for power and communications systems.

3.4 WORK STATION SETS

The prewired workstation sets are shown in Section 12705A, following this specification Section.

END OF SECTION

FURNITURE ILLUSTRATION

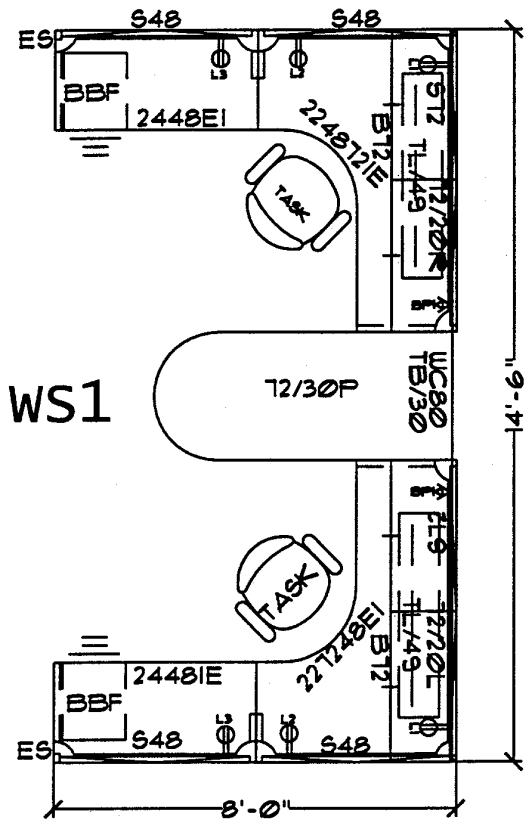

Qty	Part Description
2	RECEPTACLE-NON CONDITIONABLE, DUPLEX,LINE 1,CTN/6
2	RECEPTACLE-NON CONDITIONABLE, DUPLEX,LINE 2,CTN/6
2	RECEPTACLE-NON CONDITIONABLE, DUPLEX,LINE 3,CTN/6
2	LIGHT-SHELF,ELEK BALLAST,32 WATT,LAMP,9' CORD,49W
1	TABLE-PANEL MOUNT,LAM,VINYL EDGE,30X72
1	CHANNELS-WALL,64-3/4L
1	TACKBOARD-PANEL SUPPORTED, BRACKETS,30X18
1	CORE UNIT-STRAIGHT,INSIDE/END SUPPORTS,24X48
1	CORE UNIT-STRAIGHT,END/INSIDE SUPPORTS,24X48
1	CORE UNIT-CORNER,EXTENDED,END/INS SUPPORTS,L.H,24X24X72X48
1	CORE UNIT-CORNER,EXTENDED,INS/END SUPPORTS,RH,24X24X48X72
2	PEDESTAL-2 BOX/1 FILE DWR, WATERFALL PULL,LOCK,24D
2	CABINET-OVERHEAD,DOUBLE DOOR, LOCK,COLUM'N SUPPORTS,72W
1	SCREEN-CORE MOUNTED,CORNER,L.H, T2X19 1/4
1	SCREEN-CORE MOUNTED,CORNER,RH, T2X19 1/4
2	BASE POWER IN-SINGLE UTILITY TRUNK
2	END CAP-SINGLE UTILITY TRUNK
4	UTILITY TRUNK-SINGLE,POWERWAY, 48W
2	UTILITY TRUNK-SINGLE,POWERWAY, T2W

WS1 - 116 Sq Ft.

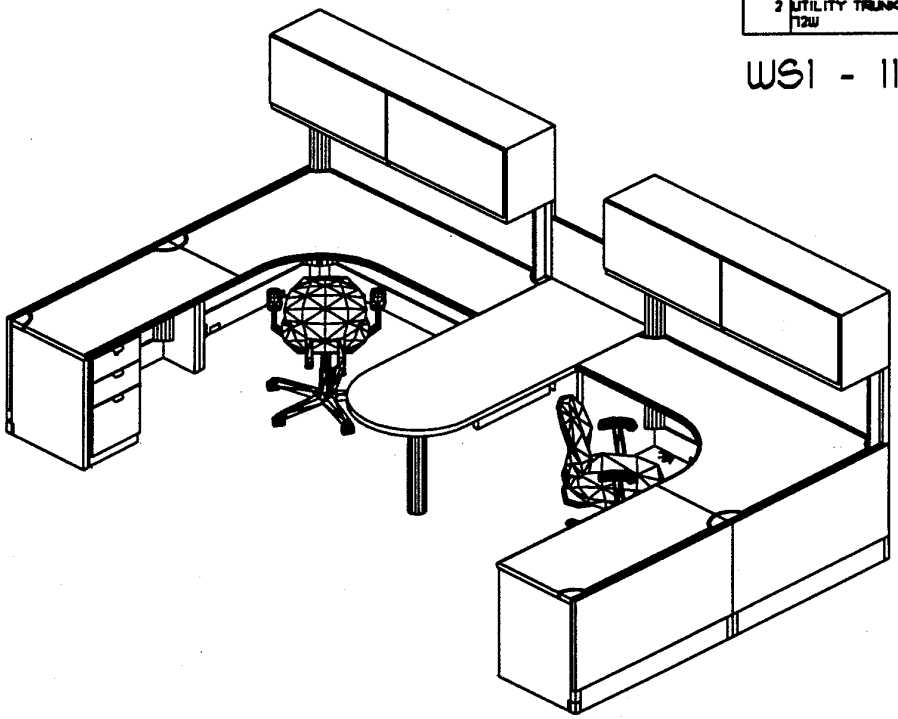

WJA

SYSTEMS FURNITURE / WS1 Typical Workstation

FURNITURE ILLUSTRATION

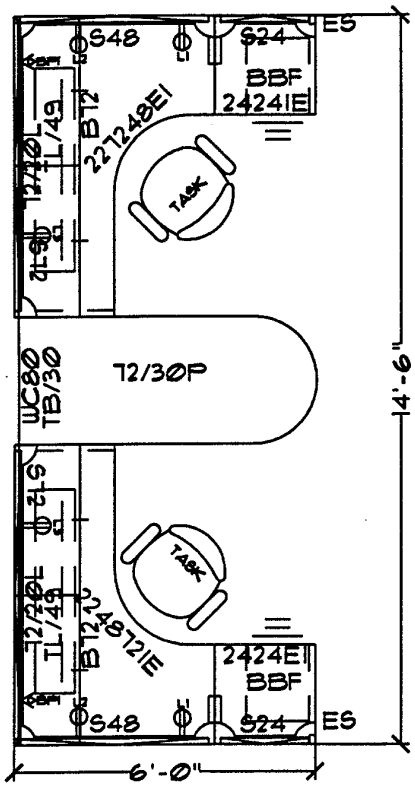

Qty	Part Description
2	RECEPTACLE-NON CONDITIONABLE, DUPLEX,LINE 1,CTN/6
2	RECEPTACLE-NON CONDITIONABLE, DUPLEX,LINE 2,CTN/6
2	RECEPTACLE-NON CONDITIONABLE, DUPLEX,LINE 3,CTN/6
2	LIGHT-SHELF,ELEC BALLAST,32 WATT,LAMP,9' CORD,49W
1	TABLE-PANEL MOUNT,LAM,VINYL EDGE,30X72
1	CHANNELS-WALL,64-3/4L
1	TACKBOARD-PANEL SUPPORTED, BRACKETS,30X18
1	CORE UNIT-STRAIGHT,INSIDE/END SUPPORTS,24X24
1	CORE UNIT-STRAIGHT,END/INSIDE SUPPORTS,24X24
1	CORE UNIT-CORNER,EXTENDED,END/INS SUPPORTS,LH,24X24X72X48
1	CORE UNIT-CORNER,EXTENDED,INS/END SUPPORTS,RH,24X24X48X72
2	PEDESTAL-2 BOX/1 FILE DWR, WATERFALL PULL,LOCK,24D
2	CABINET-OVERHEAD,DOUBLE DOOR, LOCK,COLUMN SUPPORTS,72W
1	SCREEN-CORE MOUNTED,CORNER,LH, 72X19 1/4
1	SCREEN-CORE MOUNTED,CORNER,LH, 72X19 1/4
2	BASE POWER IN-SINGLE UTILITY TRUNK
2	END CAP-SINGLE UTILITY TRUNK
2	UTILITY TRUNK-SINGLE,POWERWAY, 24W
3	UTILITY TRUNK-SINGLE,POWERWAY, 48W
2	UTILITY TRUNK-SINGLE,POWERWAY, 72W

WS2 - 87 Sq. Ft.

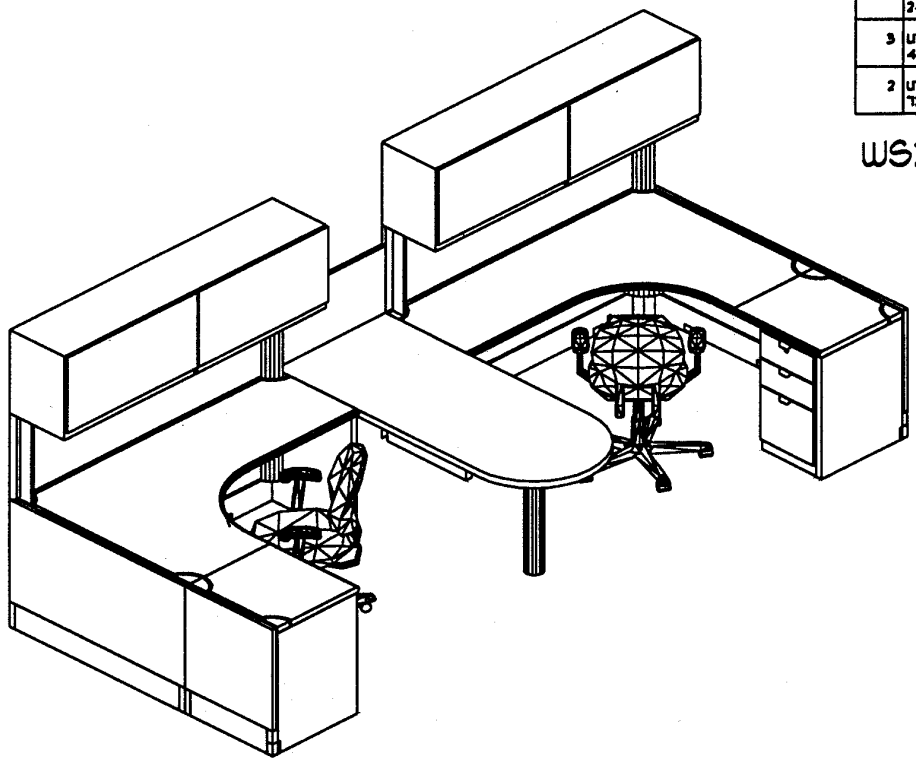

WJA

SYSTEMS FURNITURE / WS2 Typical Workstation

FURNITURE ILLUSTRATION

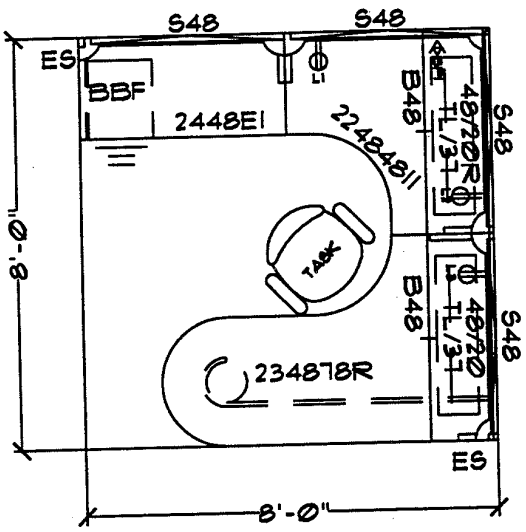

Qty	Part Description
1	RECEPTACLE-NON CONDITIONABLE, DUPLEX,LINE 1,CTN/6
1	RECEPTACLE-NON CONDITIONABLE, DUPLEX,LINE 2,CTN/6
1	RECEPTACLE-NON CONDITIONABLE, DUPLEX,LINE 3,CTN/6
2	LIGHT-SHELF,ELEK BALLAST,25 WATT,LAMP,9' CORD,37W
1	CORE UNIT-STRAIGHT,END/INSIDE SUPPORTS,24X48
1	CORE UNIT-CORNER,INSIDE/INSIDE SUPPORTS,24X24X48X48
1	TABLE-JETTY,INSIDE/CONF SUPPORTS,RH,24X30X48X18
1	PEDESTAL-2 BOX/1 FILE DWR, WATERFALL PULL,LOCK,24D
2	CABINET-OVERHEAD,SINGLE DOOR, LOCK,COLUMN SUPPORTS,48W
1	SCREEN-CORE MOUNTED,STRAIGHT, 48X19 1/4
1	SCREEN-CORE MOUNTED,CORNER,RH, 48X19 1/4
1	BASE POWER IN-SINGLE UTILITY TRUNK
2	END CAP-SINGLE UTILITY TRUNK
4	UTILITY TRUNK-SINGLE,POWERWAY, 48W

WS3R - 64 Sq. Ft.

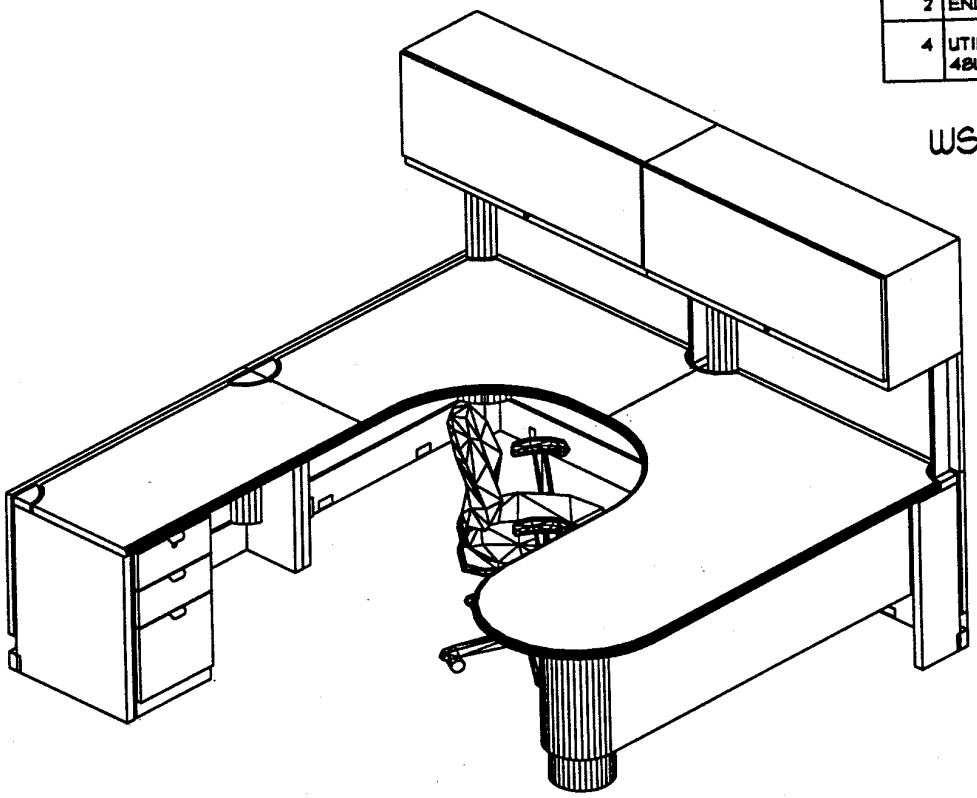

WJA

SYSTEMS FURNITURE / WS3 Typical Workstation

FURNITURE ILLUSTRATION

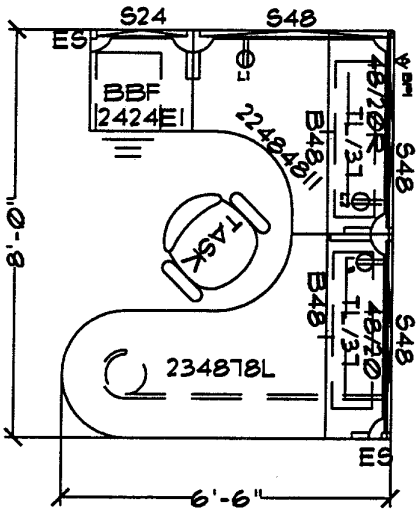

Qty	Part Description
1	RECEPTACLE-NON CONDITIONABLE, DUPLEX,LINE 1,CTN/6
1	RECEPTACLE-NON CONDITIONABLE, DUPLEX,LINE 2,CTN/6
1	RECEPTACLE-NON CONDITIONABLE, DUPLEX,LINE 3,CTN/6
2	LIGHT-SHELF,ELEK BALLAST,25 WATT,LAMP,9' CORD,37W
1	CORE UNIT-STRAIGHT,END/INSIDE SUPPORTS,24X24
1	CORE UNIT-CORNER,INSIDE/INSIDE SUPPORTS,24X24X48X48
1	TABLE-JETTY,INSIDE/CONF SUPPORTS,RH,24X30X48X18
1	PEDESTAL-2 BOX/1 FILE DWR WATERFALL PULL,LOCK,24D
2	CABINET-OVERHEAD,SINGLE DOOR LOCK,COLUMN SUPPORTS,48W
1	SCREEN-CORE MOUNTED,STRAIGHT, 48X19 1/4
1	SCREEN-CORE MOUNTED,CORNER,RH, 48X19 1/4
1	BASE POWER IN-SINGLE UTILITY TRUNK
2	END CAP-SINGLE UTILITY TRUNK
1	UTILITY TRUNK-SINGLE,POWERWAY, 24W
3	UTILITY TRUNK-SINGLE,POWERWAY, 48W

WS3A - 52 Sq. Ft.

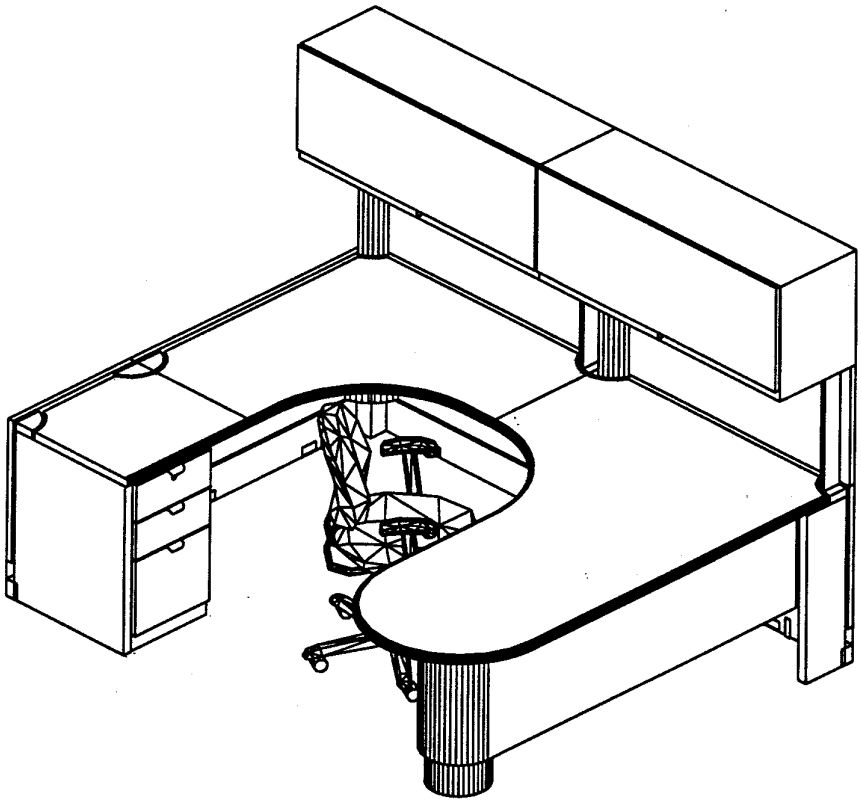

WJA

FURNITURE ILLUSTRATION

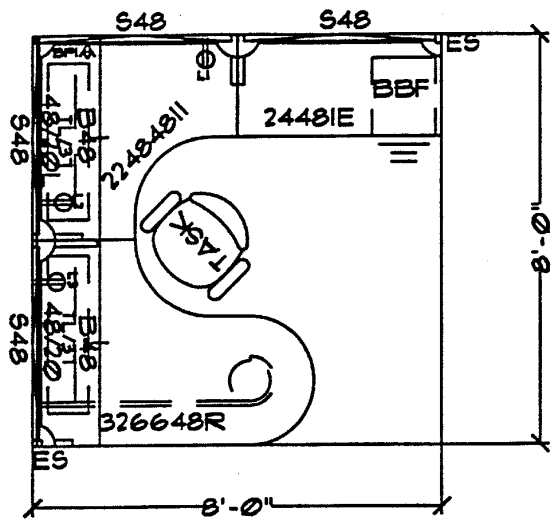

Qty	Part Description
1	RECEPTACLE-NON CONDITIONABLE, DUPLEX,LINE 1,CTN/6
1	RECEPTACLE-NON CONDITIONABLE, DUPLEX,LINE 2,CTN/6
1	RECEPTACLE-NON CONDITIONABLE, DUPLEX,LINE 3,CTN/6
2	LIGHT-SHELF,ELEK BALLAST,25 WATT,LAMP,9' CORD,37W
1	CORE UNIT-STRAIGHT,INSIDE/END SUPPORTS,24X48
1	CORE UNIT-CORNER,INSIDE/INSIDE SUPPORTS,24X24X48X48
1	TABLE-JETTY,CONF/INSIDE SUPPORTS,LH,30X24X66X48
1	PEDESTAL-2 BOX/1 FILE DWR, WATERFALL PULL,LOCK,24D
2	CABINET-OVERHEAD,SINGLE DOOR, LOCK,COLUMN SUPPORTS,48W
1	SCREEN-CORE MOUNTED,STRAIGHT, 48X19 1/4
1	SCREEN-CORE MOUNTED,CORNER,LH, 48X19 1/4
1	BASE POWER IN-SINGLE UTILITY TRUNK
2	END CAP-SINGLE UTILITY TRUNK
4	UTILITY TRUNK-SINGLE,POWERWAY, 48W

WS3BL - 64 Sq. Ft.

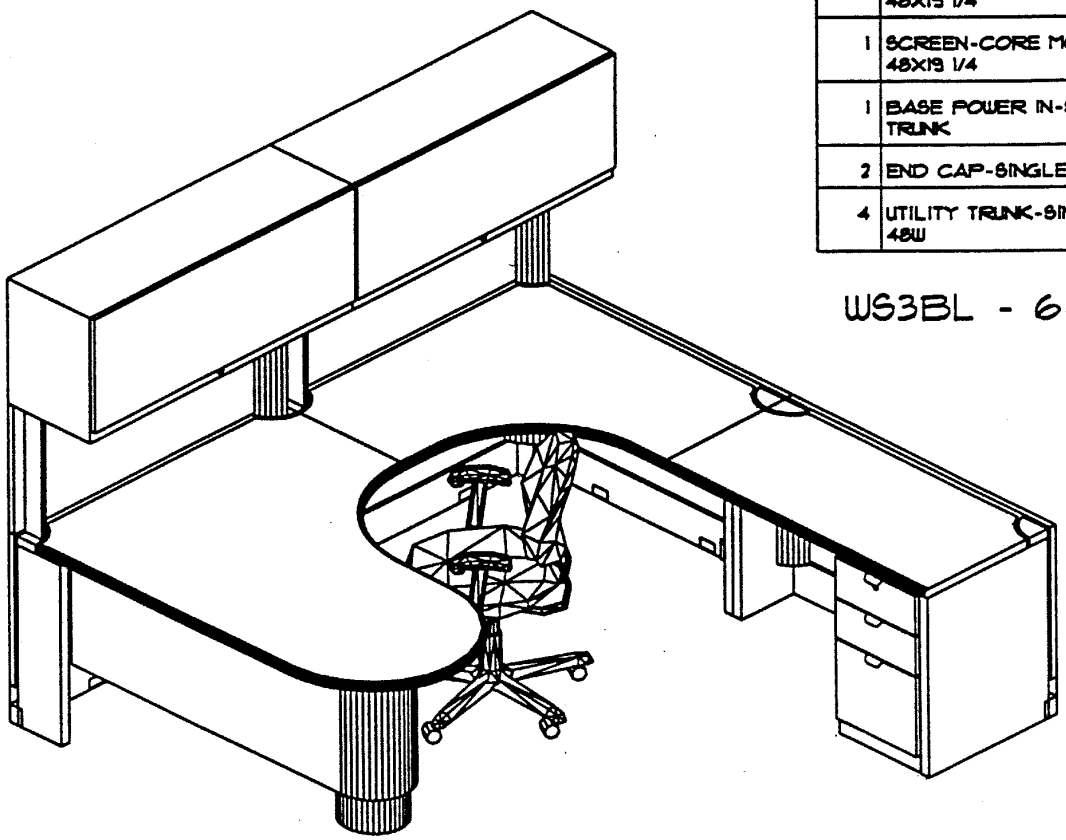

WJA

SYSTEMS FURNITURE / WS3B Typical Workstation

FURNITURE ILLUSTRATION

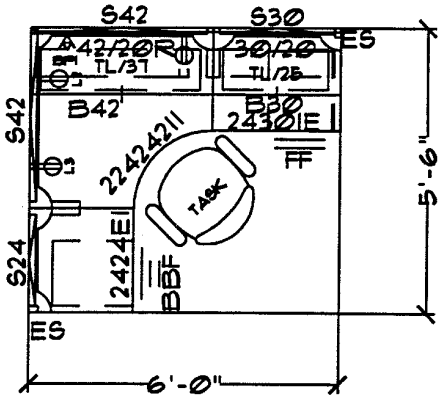

Qty	Part Description
1	RECEPTACLE-NON CONDITIONABLE, DUPLEX,LINE 1,CTN/6
1	RECEPTACLE-NON CONDITIONABLE, DUPLEX,LINE 2,CTN/6
1	RECEPTACLE-NON CONDITIONABLE, DUPLEX,LINE 3,CTN/6
1	LIGHT-SHELF,ELEK BALLAST,17 WATT,LAMP,9' CORD,25W
1	LIGHT-SHELF,ELEK BALLAST,25 WATT,LAMP,9' CORD,37W
1	CORE UNIT-STRAIGHT,INSIDE/END SUPPORTS,24X30
1	CORE UNIT-STRAIGHT,END/INSIDE SUPPORTS,24X24
1	CORE UNIT-CORNER,INSIDE/INSIDE SUPPORTS,24X24X42X42
1	PEDESTAL-2 FILE DWR,WATERFALL PULL,LOCK,24D
1	PEDESTAL-2 BOX/1 FILE DWR, WATERFALL PULL,LOCK,24D
1	CABINET-OVERHEAD,SINGLE DOOR, LOCK,COLUMN SUPPORTS,30W
1	CABINET-OVERHEAD,SINGLE DOOR, LOCK,COLUMN SUPPORTS,42W
1	SCREEN-CORE MOUNTED,STRAIGHT, 30X19 1/4
1	SCREEN-CORE MOUNTED,CORNER,RH, 42X19 1/4
1	BASE POWER IN-SINGLE UTILITY TRUNK
2	END CAP-SINGLE UTILITY TRUNK
1	UTILITY TRUNK-SINGLE,POWERWAY, 24W
1	UTILITY TRUNK-SINGLE,POWERWAY, 30W
2	UTILITY TRUNK-SINGLE,POWERWAY, 42W

WS4R - 33 Sq. Ft.

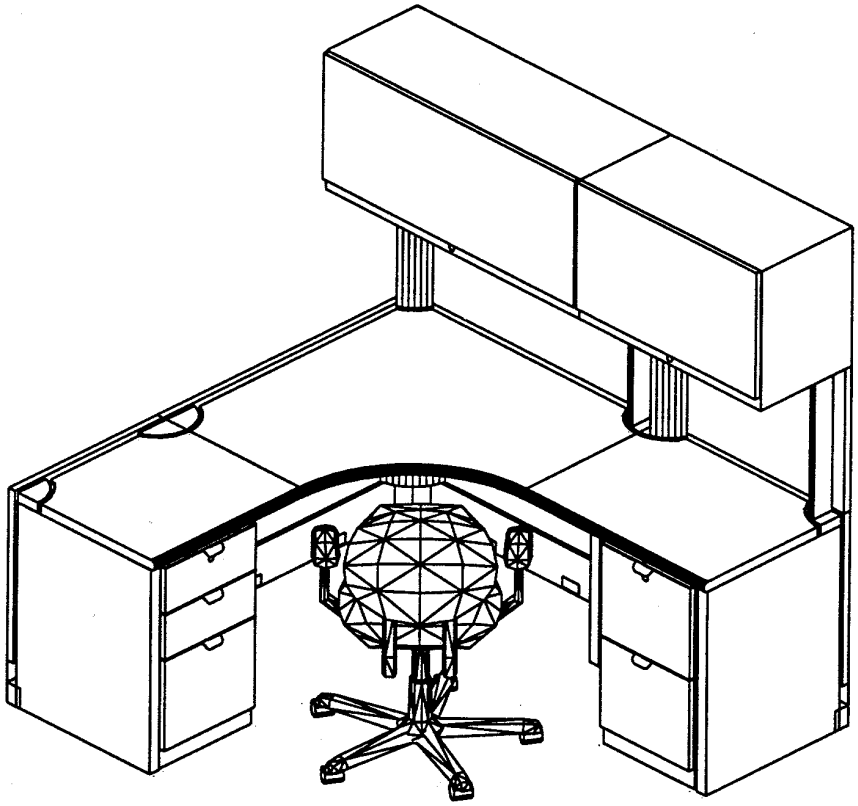

WJA

FURNITURE ILLUSTRATION

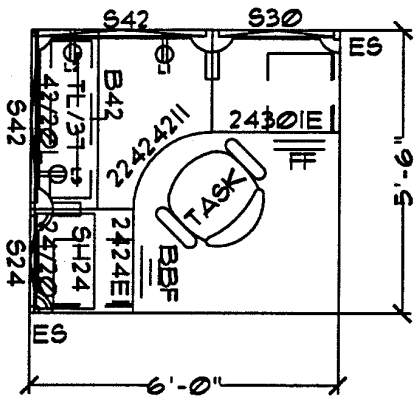

Qty	Part Description
1	RECEPTACLE-NON CONDITIONABLE, DUPLEX,LINE 1,CTN/6
1	RECEPTACLE-NON CONDITIONABLE, DUPLEX,LINE 2,CTN/6
1	RECEPTACLE-NON CONDITIONABLE, DUPLEX,LINE 3,CTN/6
1	LIGHT-SHELF,ELEK BALLAST,25 WATT,LAMP,9' CORD,37W
1	CORE UNIT-STRAIGHT,INSIDE/END SUPPORTS,24X30
1	CORE UNIT-STRAIGHT,END/INSIDE SUPPORTS,24X24
1	CORE UNIT-CORNER,INSIDE/INSIDE SUPPORTS,24X24X42X42
1	PEDESTAL-2 FILE DWR,WATERFALL PULL,LOCK,24D
1	PEDESTAL-2 BOX/1 FILE DWR, WATERFALL PULL,LOCK,24D
1	CABINET-OVERHEAD,SINGLE DOOR, LOCK,COLUMN SUPPORTS,42W
1	SHELF PKG-COLUMN MOUNTED, SCREEN,STRAIGHT,24W
1	SCREEN-CORE MOUNTED,STRAIGHT, 24X19 1/4
1	SCREEN-CORE MOUNTED,CORNER,LH, 42X19 1/4
1	BASE POWER IN-SINGLE UTILITY TRUNK
2	END CAP-SINGLE UTILITY TRUNK
1	UTILITY TRUNK-SINGLE,POWER,WAY, 24W
1	UTILITY TRUNK-SINGLE,POWER,WAY, 30W
2	UTILITY TRUNK-SINGLE,POWER,WAY, 42W

WS4AR - 33 Sq. Ft.

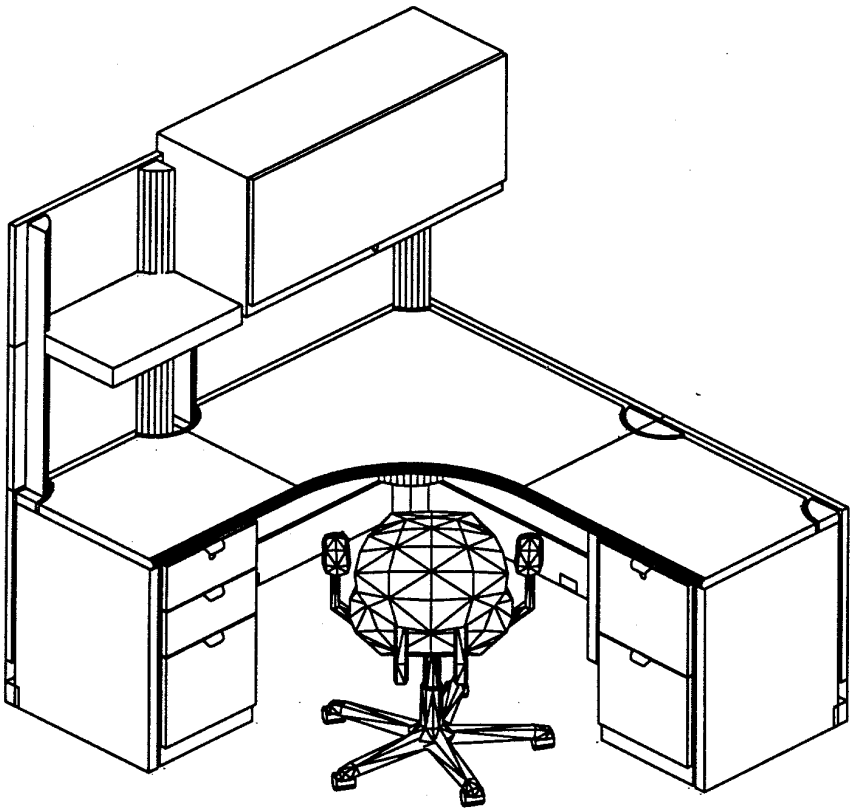

WJA

FURNITURE ILLUSTRATION

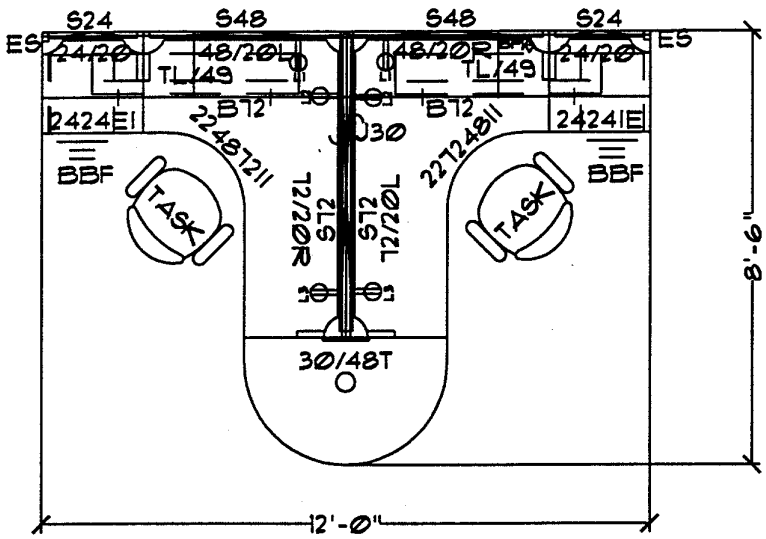

Qty	Part Description
2	RECEPTACLE-NON CONDITIONABLE, DUPLEX,LINE 1,CTN/6
2	RECEPTACLE-NON CONDITIONABLE, DUPLEX,LINE 2,CTN/6
2	RECEPTACLE-NON CONDITIONABLE, DUPLEX,LINE 3,CTN/6
2	LIGHT-SHELF,ELEK BALLAST,32 WATT,LAMP,9' CORD,49W
1	CORE UNIT-STRAIGHT,INSIDE/END SUPPORTS,24X24
1	CORE UNIT-STRAIGHT,END/INSIDE SUPPORTS,24X24
1	TABLE-SPANNER30X48
1	CORE UNIT-CORNER,EXTENDED,INS/INS SUPPORTS,LH,24X24X12X48
1	CORE UNIT-CORNER,EXTENDED,INS/INS SUPPORTS,RH,24X24X48X12
2	PEDESTAL-2 BOX/1 FILE DWR, WATERFALL PULL,LOCK,24D
2	CABINET-OVERHEAD,DOUBLE DOOR, LOCK,COLUMN SUPPORTS,72W
2	SCREEN-CORE MOUNTED,STRAIGHT, 24X19 1/4
1	SCREEN-CORE MOUNTED,CORNER,LH, 48X19 1/4
1	SCREEN-CORE MOUNTED,CORNER,LH, 72X19 1/4
1	SCREEN-CORE MOUNTED,CORNER,RH, 48X19 1/4
1	SCREEN-CORE MOUNTED,CORNER,RH, 72X19 1/4
1	JUMPER-30L,SINGLE UTILITY TRUNK
1	BASE POWER IN-SINGLE UTILITY TRUNK
2	END CAP-SINGLE UTILITY TRUNK
2	UTILITY TRUNK-SINGLE,POWERWAY, 24W
2	UTILITY TRUNK-SINGLE,POWERWAY, 48W
2	UTILITY TRUNK-SINGLE,POWERWAY, 72W

WS5 - 102 Sq. Ft.

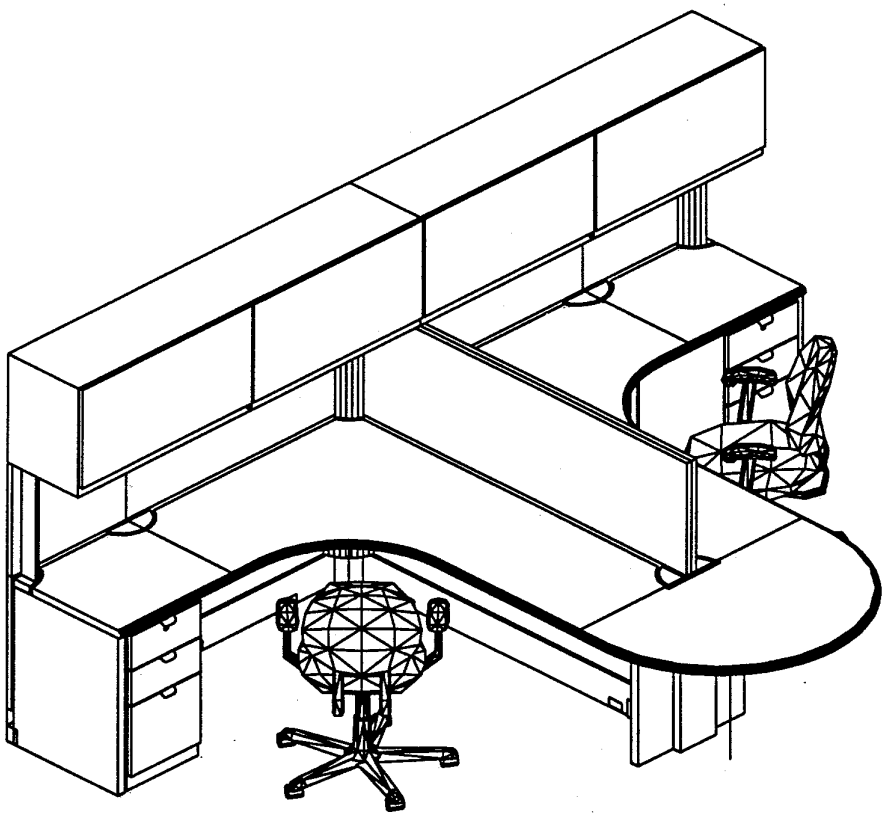

WJA

SYSTEMS FURNITURE / WS5 Typical Workstation

FURNITURE ILLUSTRATION

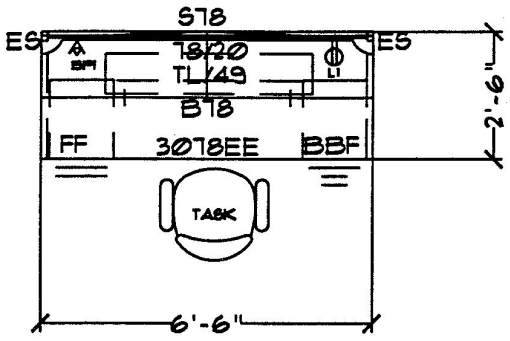

Qty	Part Description
1	RECEPTACLE-NON CONDITIONABLE, DUPLEX,LINE 3,CTN/6
1	LIGHT-SHELF,ELEK BALLAST,32 WATT,LAMP,9' CORD,49W
1	CORE UNIT-STRAIGHT,END/END SUPPORTS,30X78
1	PEDESTAL-2 FILE DWR,WATERFALL PULL,LOCK,24D
1	PEDESTAL-2 BOX/1 FILE DWR, WATERFALL PULL,LOCK,24D
1	CABINET-OVERHEAD,DOUBLE DOOR, LOCK,COLUMN SUPPORTS,78W
1	SCREEN-CORE MOUNTED,STRAIGHT, 78X19 1/4
1	BASE POWER IN-SINGLE UTILITY TRUNK
2	END CAP-SINGLE UTILITY TRUNK
1	UTILITY TRUNK-SINGLE,POWERWAY, 78W

WS6 - 16.25 Sq. Ft.

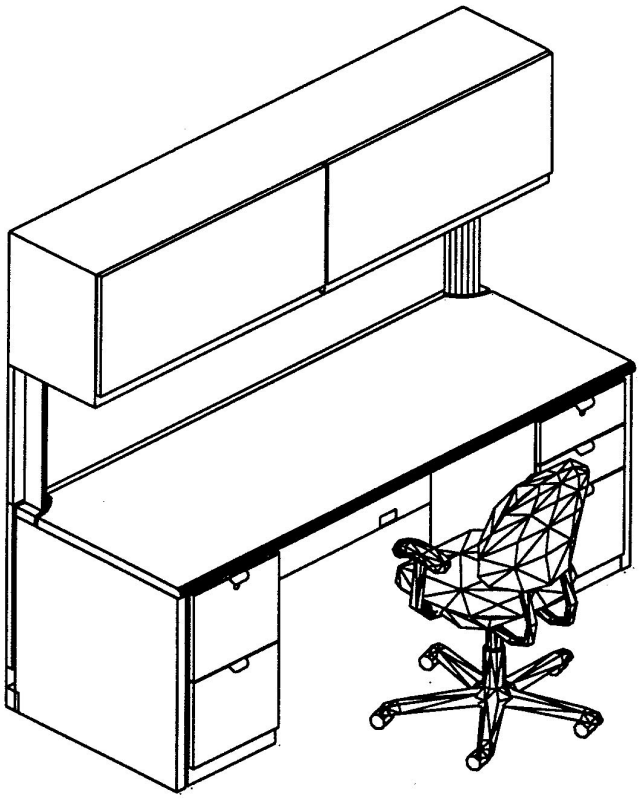

WJA

SYSTEMS FURNITURE / WS6 Typical Workstation

FURNITURE ILLUSTRATION

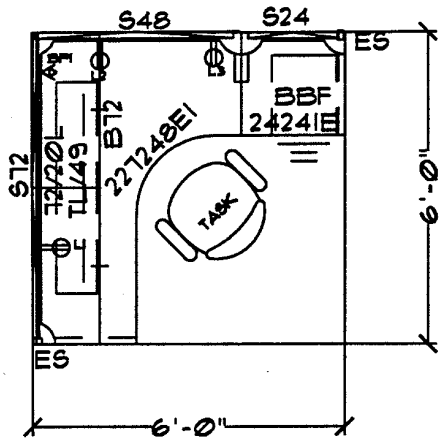

Qty	Part Description
1	RECEPTACLE-NON CONDITIONABLE, DUPLEX,LINE 1,CTN/6
1	RECEPTACLE-NON CONDITIONABLE, DUPLEX,LINE 2,CTN/6
1	RECEPTACLE-NON CONDITIONABLE, DUPLEX,LINE 3,CTN/6
1	LIGHT-SHELF,ELEK BALLAST,32 WATT,LAMP,9' CORD,49W
1	CORE UNIT-STRAIGHT,INSIDE/END SUPPORTS,24X24
1	CORE UNIT-CORNER,EXTENDED,END/INS SUPPORTS,LH,24X24X72X48
1	PEDESTAL-2 BOX/1 FILE DWR, WATERFALL PULL,LOCK,24D
1	CABINET-OVERHEAD,DOUBLE DOOR, LOCK,COLUMN SUPPORTS,72W
1	SCREEN-CORE MOUNTED,CORNER,LH, 72X19 1/4
1	BASE POWER IN-SINGLE UTILITY TRUNK
2	END CAP-SINGLE UTILITY TRUNK
1	UTILITY TRUNK-SINGLE,POWERWAY, 24W
1	UTILITY TRUNK-SINGLE,POWERWAY, 48W
1	UTILITY TRUNK-SINGLE,POWERWAY, 72W

WS7L - 36 Sq. Ft.

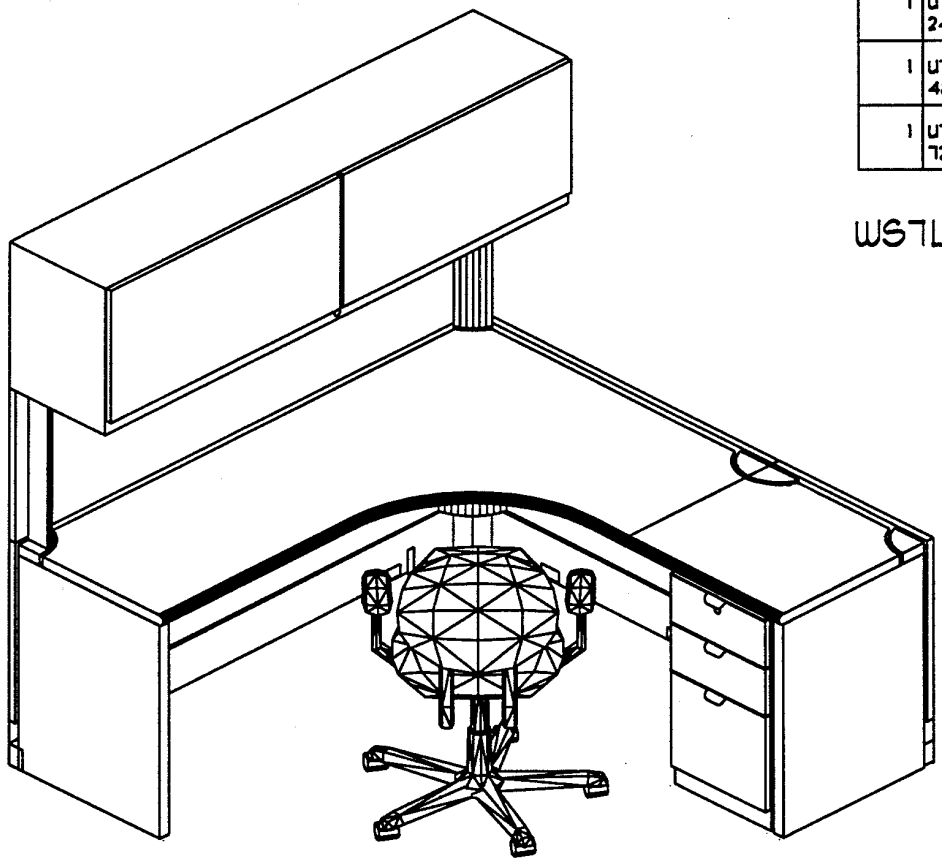

WJA

FURNITURE ILLUSTRATION

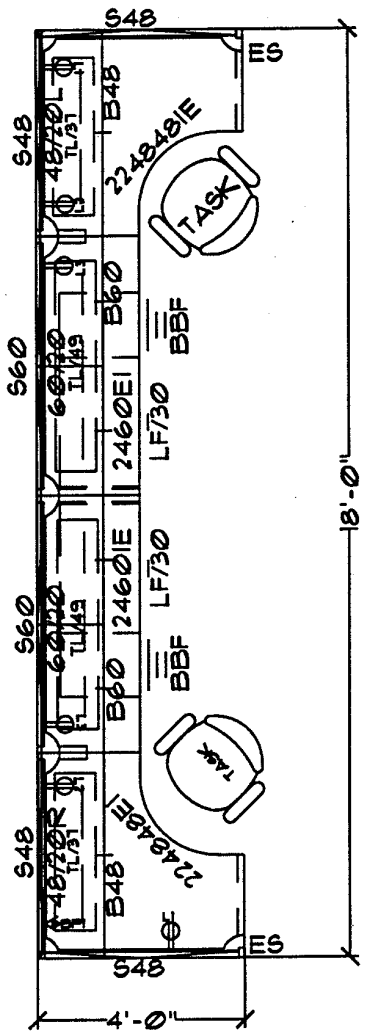

Qty	Part Description
2	RECEPTACLE-NON CONDITIONABLE, DUPLEX,LINE 1,CTN/6
2	RECEPTACLE-NON CONDITIONABLE, DUPLEX,LINE 2,CTN/6
2	RECEPTACLE-NON CONDITIONABLE, DUPLEX,LINE 3,CTN/6
2	LIGHT-SHELF,ELEK BALLAST,25 WATT,LAMP,9' CORD,37W
2	LIGHT-SHELF,ELEK BALLAST,32 WATT,LAMP,9' CORD,49W
1	CORE UNIT-STRAIGHT,INSIDE/END SUPPORTS,24X60
1	CORE UNIT-STRAIGHT,END/INSIDE SUPPORTS,24X60
1	CORE UNIT-CORNER,INSIDE/END SUPPORTS,24X24X48X48
1	CORE UNIT-CORNER,END/INSIDE SUPPORTS,24X24X48X48
2	PEDESTAL-2 BOX/1 FILE DWR, WATERFALL PULL,LOCK,24D
2	CABINET-OVERHEAD,SINGLE DOOR, LOCK,COLUMN SUPPORTS,48W
2	CABINET-OVERHEAD,DOUBLE DOOR, LOCK,COLUMN SUPPORTS,60W
2	FILE-LATERAL,2 DWR,WATERFALL PULL,19X30X27
2	SCREEN-CORE MOUNTED,STRAIGHT, 60X19 1/4
1	SCREEN-CORE MOUNTED,CORNER,LH, 48X19 1/4
1	SCREEN-CORE MOUNTED,CORNER,RH, 48X19 1/4
1	BASE POWER IN-SINGLE UTILITY TRUNK
2	END CAP-SINGLE UTILITY TRUNK
4	UTILITY TRUNK-SINGLE,POWERWAY, 48W
2	UTILITY TRUNK-SINGLE,POWERWAY, 60W

WS8 - 72 Sq. Ft.

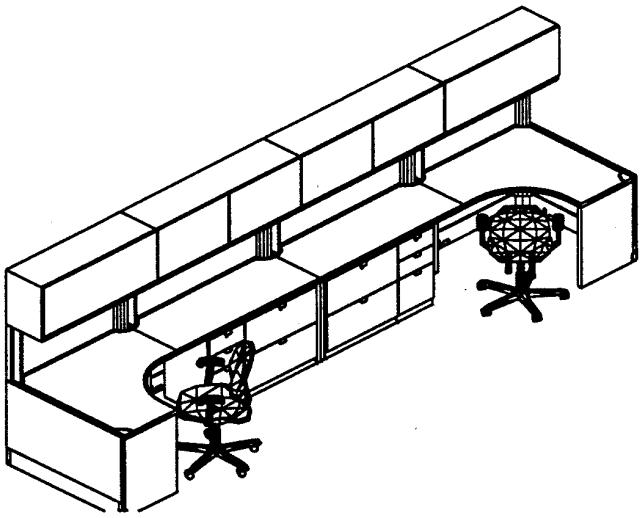

WJA

SYSTEMS FURNITURE / WS8 Typical Workstation

FURNITURE ILLUSTRATION

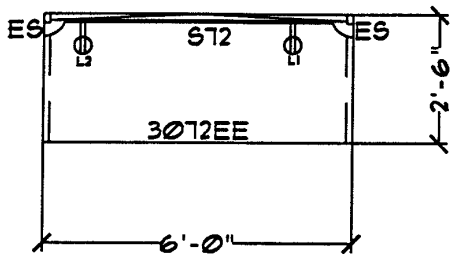

Qty	Part Description
1	RECEPTACLE-NON CONDITIONABLE, DUPLEX,LINE 2,CTN/6
1	RECEPTACLE-NON CONDITIONABLE, DUPLEX,LINE 3,CTN/6
1	CORE UNIT-STRAIGHT,END/END SUPPORTS,30X72
2	END CAP-SINGLE UTILITY TRUNK
1	UTILITY TRUNK-SINGLE,POWERWAY, 72W

WS9 - 15 Sq. Ft.

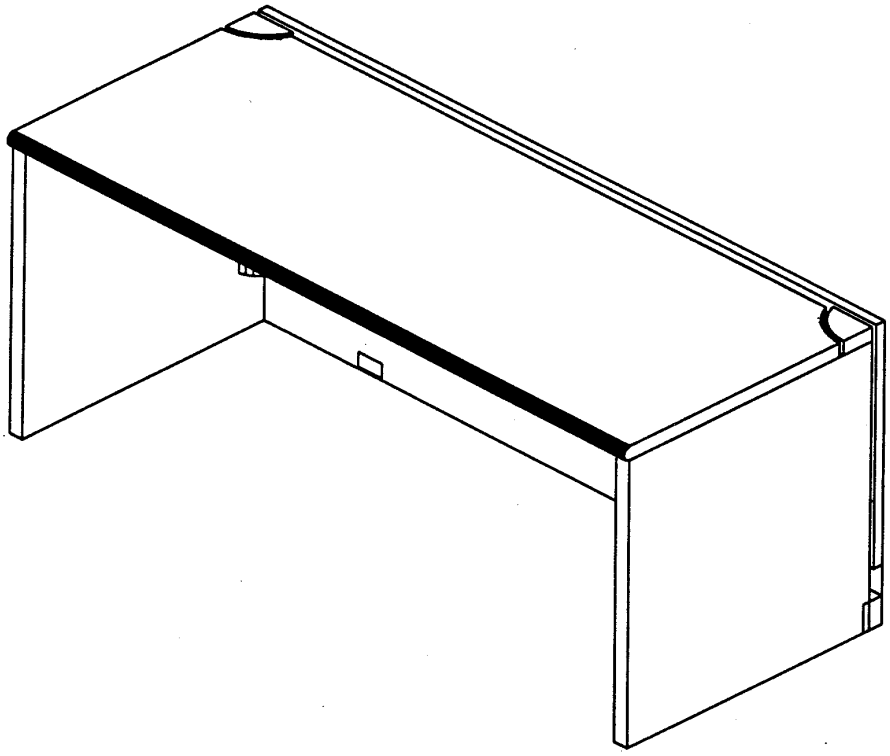

WJA

FURNITURE ILLUSTRATION

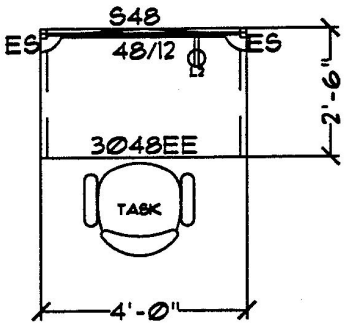

Qty	Part Description
1	RECEPTACLE-NON CONDITIONABLE, DUPLEX,LINE 2,CTN/6
1	CORE UNIT-STRAIGHT,END/END SUPPORTS,30X48
1	SCREEN-CORE MOUNTED,STRAIGHT, 48X11 3/4
2	END CAP-SINGLE UTILITY TRUNK
1	UTILITY TRUNK-SINGLE,POWERWAY, 48W

WS10 - 10 Sq. Ft.

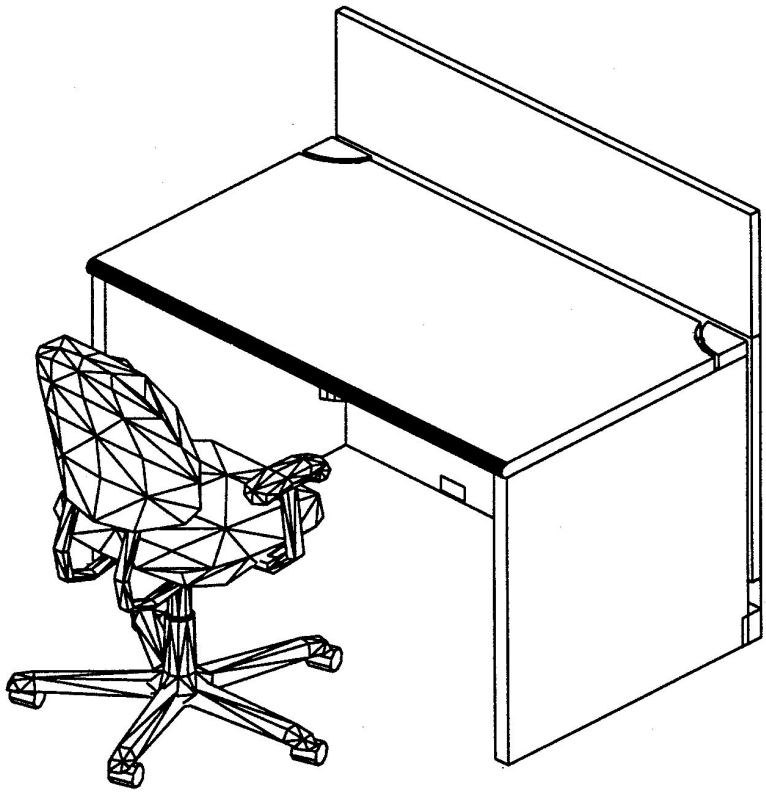

WJA

SYSTEMS FURNITURE / WS10 Typical Workstation

FURNITURE ILLUSTRATION

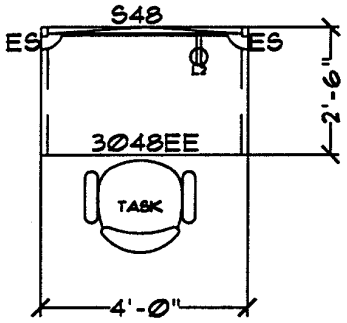

Qty	Part Description
1	RECEPTACLE-NON CONDITIONABLE, DUPLEX,LINE 2,CTN/6
1	CORE UNIT-STRAIGHT,END/END SUPPORTS,30X48
2	END CAP-SINGLE UTILITY TRUNK
1	UTILITY TRUNK-SINGLE,POWERWAY, 48W

WS10A - 10 Sq. Ft.

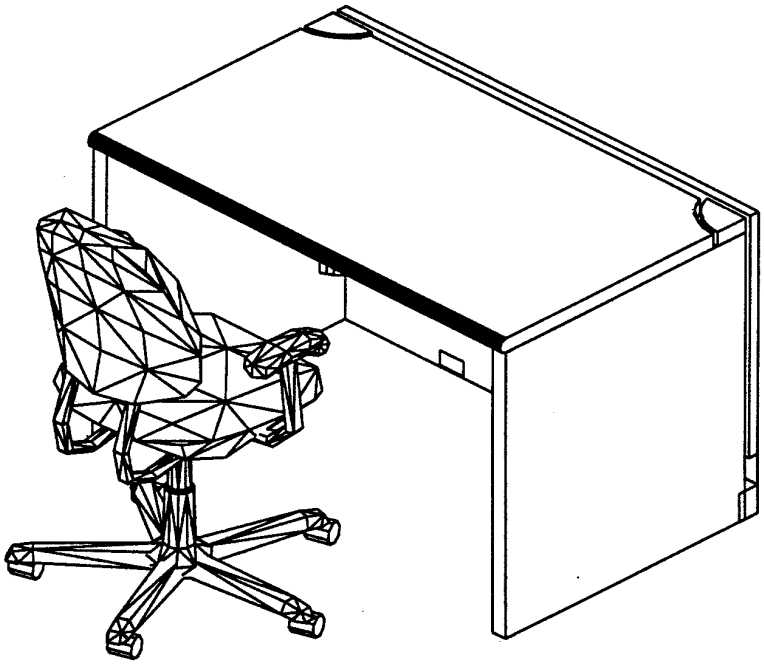

WJA

SYSTEMS FURNITURE / WS10A Typical Workstation

FURNITURE ILLUSTRATION

Qty	Part Description
2	PANEL-TACKABLE ACOUSTICAL, 60X65
2	BRACKET-STABILIZER,PANEL,CTN/2

WS10B - 1.875 Sq. Ft.

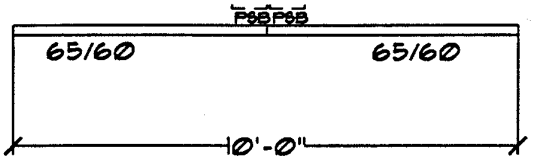

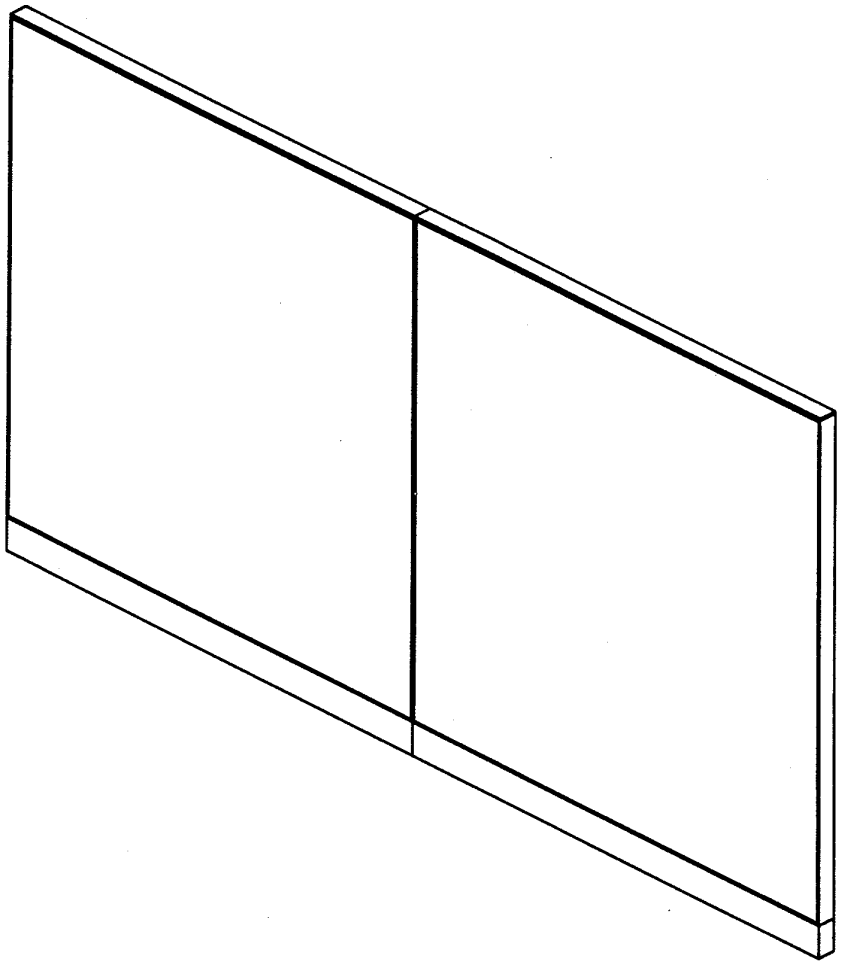

WJA

FURNITURE ILLUSTRATION

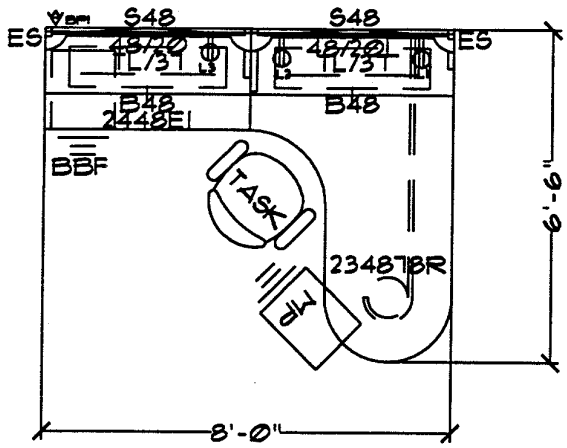

Qty	Part Description
1	RECEPTACLE-NON CONDITIONABLE, DUPLEX,LINE 1,CTN/6
1	RECEPTACLE-NON CONDITIONABLE, DUPLEX,LINE 2,CTN/6
1	RECEPTACLE-NON CONDITIONABLE, DUPLEX,LINE 3,CTN/6
2	LIGHT-SHELF,ELEK BALLAST,25 WATT,LAMP,9' CORD,37W
1	CORE UNIT-STRAIGHT,END/INSIDE SUPPORTS,24X48
1	TABLE-JETTY,INSIDE/CONF SUPPORTS,RH,24X30X48X78
1	PEDESTAL-2 BOX/1 FILE DWR, WATERFALL PULL,LOCK,24D
1	PEDESTAL-MOBILE,2 BOX/1 FILE DWR,LK,WATERFALL PULL,24X15
2	CABINET-OVERHEAD,SINGLE DOOR, LOCK,COLUMN SUPPORTS,48W
1	SCREEN-CORE MOUNTED,STRAIGHT, 48X19 1/4
1	SCREEN-CORE MOUNTED,STRAIGHT, 48X19 1/4
1	BASE POWER IN-SINGLE UTILITY TRUNK
2	END CAP-SINGLE UTILITY TRUNK
2	UTILITY TRUNK-SINGLE,POWERWAY, 48W

WS11R - 52 Sq. Ft.

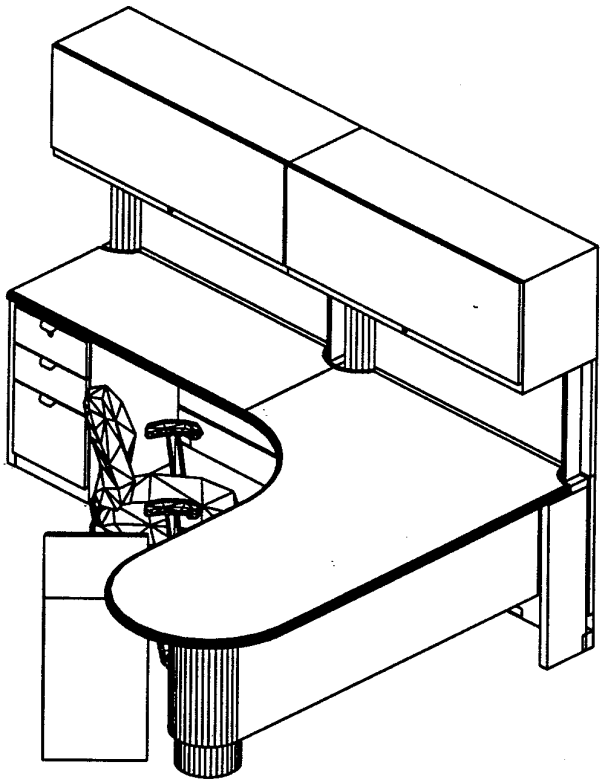

WJA

SYSTEMS FURNITURE / WS11 Typical Workstation

FURNITURE ILLUSTRATION

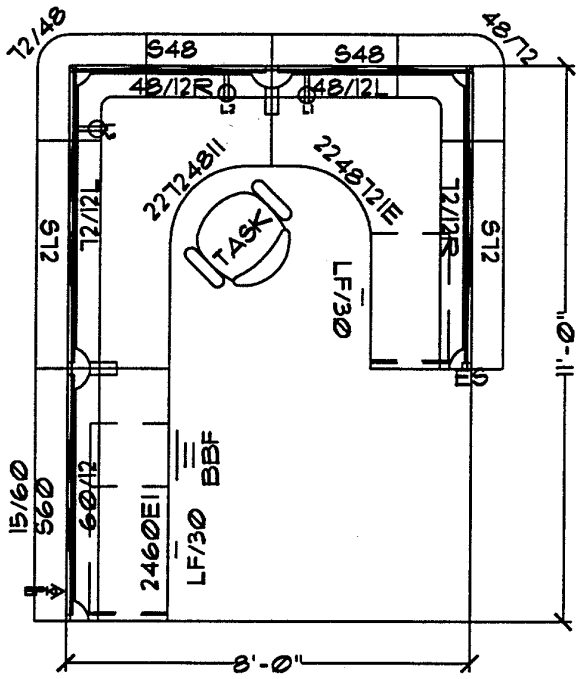

Qty	Part Description
1	RECEPTACLE-NON CONDITIONABLE, DUPLEX,LINE 1,CTN/6
1	RECEPTACLE-NON CONDITIONABLE, DUPLEX,LINE 2,CTN/6
1	RECEPTACLE-NON CONDITIONABLE, DUPLEX,LINE 3,CTN/6
1	COUNTERTOP-CORNER,STRAIGHT/ STRAIGHT END6,BX48X72
1	COUNTERTOP-CORNER,STRAIGHT/ STRAIGHT END6,BX48X72
1	COUNTERTOP-STRAIGHT,STRAIGHT/ STRAIGHT END6,BX60
1	CORE UNIT-STRAIGHT,END/INSIDE SUPPORTS,24X60
1	CORE UNIT-CORNER,EXTENDED,INS/ INS SUPPORTS,LH,24X24X72X48
1	CORE UNIT-CORNER,EXTENDED,INS/ END SUPPORTS,RH,24X24X48X72
1	PEDESTAL-2 BOX/1 FILE DWR, WATERFALL FULL,LOCK,24D
2	FILE-LATERAL,2 DWR,WATERFALL FULL,BX30X27
1	SCREEN-CORE MOUNTED,STRAIGHT, 60X11 3/4
1	SCREEN-CORE MOUNTED,CORNER,LH, 48X11 3/4
1	SCREEN-CORE MOUNTED,CORNER,LH, 72X11 3/4
1	SCREEN-CORE MOUNTED,CORNER,RH, 48X11 3/4
1	SCREEN-CORE MOUNTED,CORNER,RH, 72X11 3/4
1	BASE POWER IN-SINGLE UTILITY TRUNK
1	END CAP-SINGLE UTILITY TRUNK
2	UTILITY TRUNK-SINGLE,POWER,WAY, 48W
1	UTILITY TRUNK-SINGLE,POWER,WAY, 60W
2	UTILITY TRUNK-SINGLE,POWER,WAY, 72W

WS12 - 88 Sq. Ft.

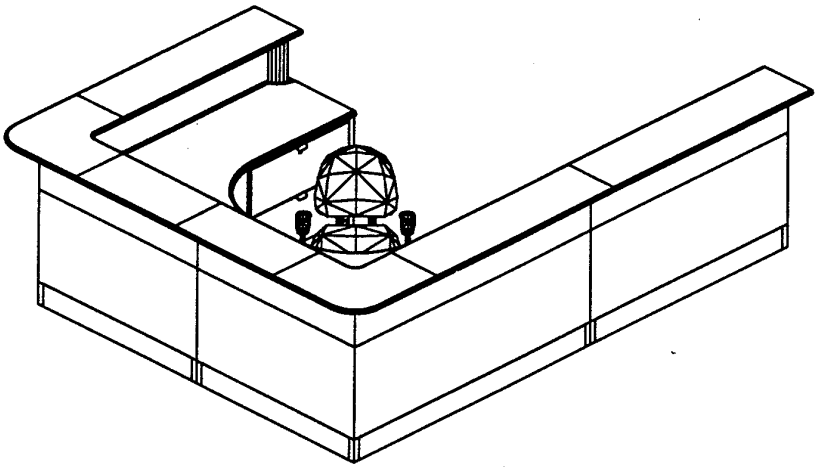

FRONT VIEW

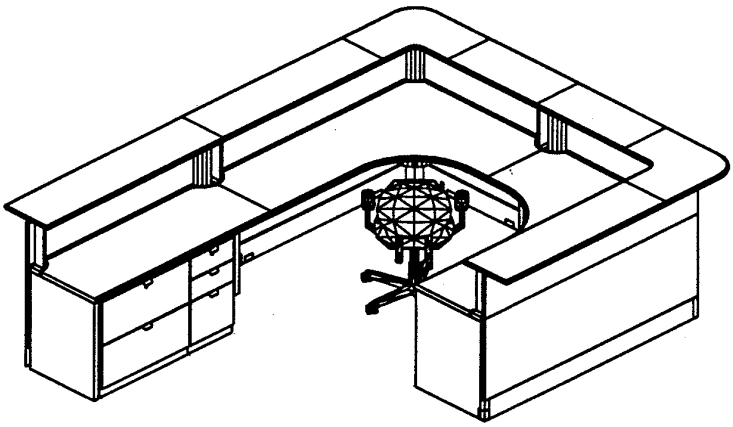

INTERIOR VIEW

WJA

FURNITURE ILLUSTRATION

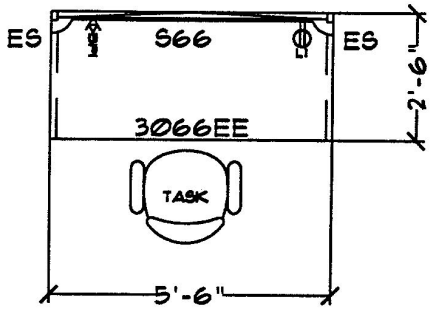

Qty	Part Description
1	RECEPTACLE-NON CONDITIONABLE, DUPLEX,LINE 3,CTN/6
1	CORE UNIT-STRAIGHT,END/END SUPPORTS,30X66
1	BASE POWER IN-SINGLE UTILITY TRUNK
2	END CAP-SINGLE UTILITY TRUNK
1	UTILITY TRUNK-SINGLE,POWERWAY, 66W

WS13 - 13.75 Sq. Ft.

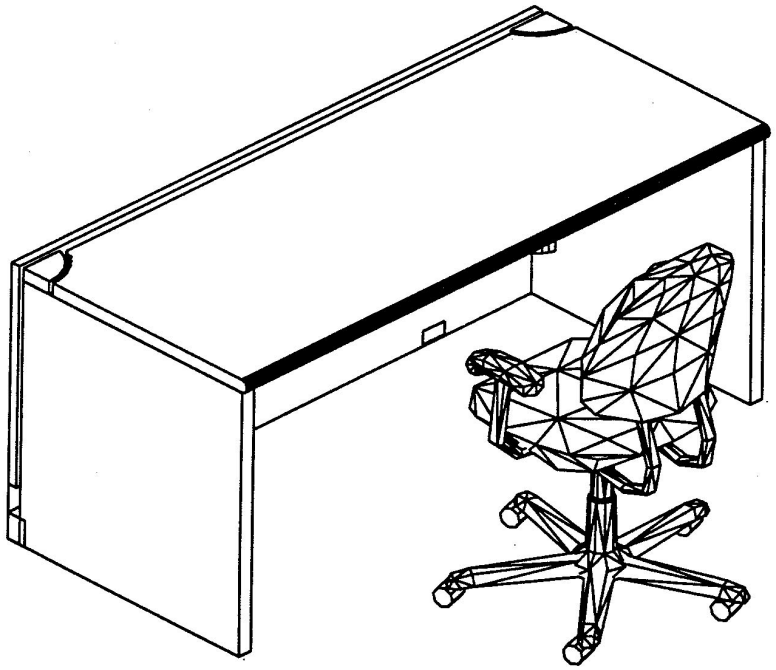

WJA

Quotation

Barclay Dean Interiors
1917 120th Ave. N.E. • P.O. Box 3827
Bellevue, WA 98005
(425) 451-8940 • FAX (425) 454-1705

Quote Number	Quote Date	Customer Order Number	Customer Number	Account Representative	Proj No.
8577	08/26/98		STEGSA	Christina Six	

QUOTE TO: Deb Heitmeir
Steelcase Inc c/o Barclay Dean
GSA Select Acct Svcs
CH-2W-SS(GSA), 901 44th St SE
Kentwood, MI 49508

P: 1.206.246.4919

SHIP TO: Deb Heitmeir
Steelcase Inc c/o Barclay Dean
GSA Select Acct Svcs
CH-2W-SS(GSA), 901 44th St SE
Kentwood, MI 49508

P: 1.206.246.4919

Terms Net 30 Days

Line	Quantity	Catalog Number/Description	Unit Price	Extended Amount
		**********	**********	
		* WS1	*	
		**********	**********	
1	1	E90153 STEELCASE RECEPTACLE-NON CONDITIONABLE, DUPLEX,LINE 1,CTN/6 PLASTIC :6655 WARM WHITE		
2	1	E90160 STEELCASE RECEPTACLE-NON CONDITIONABLE, DUPLEX,LINE 2,CTN/6 PLASTIC :6655 WARM WHITE		
3	1	E90177 STEELCASE RECEPTACLE-NON CONDITIONABLE, DUPLEX,LINE 3,CTN/6 PLASTIC :6655 WARM WHITE		
4	2	LSM48K STEELCASE LIGHT-SHELF,ELEK BALLAST,32 WATT,LAMP,9' CORD,49W OPTIONS * * OPTIONS * * LGT OPTS *OPT:SHELF LIGHT COLOR OPTI PNTLIGHT NON-STD PAINTED HOUSING BASIC BASIC (PRIMARY FINISH) STD PNT STANDARD PAINT 4762 CREAM		
5	1	MPT7230 STEELCASE TABLE-PANEL SUPPORTED,LAM, VINYL EDGE,30X72 COLUMN :4762 CREAM		

ACCEPTED BY _____ TITLE _____ DATE _____

Barclay Dean Interiors
1917 120th Ave. N.E. • P.O. Box 3827
Bellevue, WA 98005
(425) 451-8940 • FAX (425) 454-1705

Quotation

Quote Number	Quote Date	Customer Order Number	Customer Number	Account Representative	Proj No.
8577	08/26/98		STEGSA	Christina Six	

Line	Quantity	Catalog Number/Description	Unit Price	Extended Amount
		EDGE :6631 CREAM TOP-SURF:2722 CREAM		
6	1	PWC80 STEELCASE CHANNELS-WALL,64-3/4L BASIC :4762 CREAM		
7	1	TB3018 STEELCASE TACKBOARD-PANEL SUPPORTED, BRACKETS,30X18 TKBD :F003 FIG		
8	1	X1AL24485 STEELCASE CORE UNIT-STRAIGHT,INSIDE/END SUPPORTS,24X48 BASIC :4762 CREAM PORT :6681 GROTTO V4 TOP-SURF:2722 CREAM		
9	1	X1AR24483 STEELCASE CORE UNIT-STRAIGHT,END/INSIDE SUPPORTS,24X48 BASIC :4762 CREAM PORT :6681 GROTTO V4 TOP-SURF:2722 CREAM		
10	1	X1MR24722 STEELCASE CORE UNIT-CORNER,EXTENDED,END/ INS SUPPORTS,LH,24X24X72X48 BASIC :4762 CREAM PORT :6681 GROTTO V4 TOP-SURF:2722 CREAM		
11	1	X1NL24725 STEELCASE CORE UNIT-CORNER,EXTENDED,INS/ END SUPPORTS,RH,24X24X48X72 BASIC :4762 CREAM PORT :6681 GROTTO V4 TOP-SURF:2722 CREAM		

ACCEPTED BY _____ TITLE _____ DATE _____

Barclay Dean Interiors
1917 120th Ave. N.E. • P.O. Box 3827
Bellevue, WA 98005
(425) 451-8940 • FAX (425) 454-1705

Quotation

Quote Number	Quote Date	Customer Order Number	Customer Number	Account Representative	Proj No.
8577	08/26/98		STEGSA	Christina Six	

Line	Quantity	Catalog Number/Description	Unit Price	Extended Amount
12	2	X2CN2400A2 STEELCASE PEDESTAL-2 BOX/1 FILE DWR, WATERFALL PULL,LOCK,24D BASIC :4762 CREAM LOCK :9201 POLISHED CHROME PULL :9210 COPPER KEYS :SK SPEC 2-PLUG BBF		
13	2	X2FC00729 STEELCASE CABINET-OVERHEAD,DOUBLE DOOR, LOCK,COLUMN SUPPORTS,72W BASIC :4762 CREAM COLUMN :4762 CREAM LOCK :9201 POLISHED CHROME KEYS :SK SPEC 2-PLUG B72		
14	1	X3E000729 STEELCASE SCREEN-CORE MOUNTED,CORNER,LH, 72X19 1/4 INSIDE :F003 FIG OUTSIDE :F003 FIG TOP-CAP :6681 GROTTO V4		
15	1	X3F000720 STEELCASE SCREEN-CORE MOUNTED,CORNER,RH, 72X19 1/4 INSIDE :F003 FIG OUTSIDE :F003 FIG TOP-CAP :6681 GROTTO V4		
16	2	X4IS00001 STEELCASE BASE POWER IN-SINGLE UTILITY TRUNK		
17	2	X4ZE15001 STEELCASE END CAP-SINGLE UTILITY TRUNK TRIM :4762 CREAM		

ACCEPTED BY _____ TITLE _____ DATE _____

Barclay Dean Interiors
1917 120th Ave. N.E. • P.O. Box 3827
Bellevue, WA 98005
(425) 451-8940 • FAX (425) 454-1705

Quotation

Quote Number	Quote Date	Customer Order Number	Customer Number	Account Representative	Proj No.
8577	08/26/98		STEGSA	Christina Six	

Line	Quantity	Catalog Number/Description	Unit Price	Extended Amount
18	4	X4ZW00488 STEELCASE UTILITY TRUNK-SINGLE,POWERWAY, 48W TRIM :4762 CREAM		
19	2	X4ZW00726 STEELCASE UTILITY TRUNK-SINGLE,POWERWAY, 72W TRIM :4762 CREAM		

ACCEPTED BY _____ TITLE _____ DATE _____

Quotation

Barclay Dean Interiors
1917 120th Ave. N.E. • P.O. Box 3827
Bellevue, WA 98005
(425) 451-8940 • FAX (425) 454-1705

Quote Number	Quote Date	Customer Order Number	Customer Number	Account Representative	Proj No.
8584	08/26/98		STEGSA	Christina Six	

QUOTE TO: Deb Heitmeir
Steelcase Inc c/o Barclay Dean
GSA Select Acct Svcs
CH-2W-SS(GSA), 901 44th St SE
Kentwood, MI 49508

P: 1.206.246.4919

SHIP TO: Deb Heitmeir
Steelcase Inc c/o Barclay Dean
GSA Select Acct Svcs
CH-2W-SS(GSA), 901 44th St SE
Kentwood, MI 49508

P: 1.206.246.4919

Terms Net 30 Days

Line	Quantity	Catalog Number/Description	Unit Price	Extended Amount
		**********		
		* WS2 *		
		**********		
1	1	E90153 STEELCASE RECEPTACLE-NON CONDITIONABLE, DUPLEX,LINE 1,CTN/6 PLASTIC :6655 WARM WHITE		
2	1	E90160 STEELCASE RECEPTACLE-NON CONDITIONABLE, DUPLEX,LINE 2,CTN/6 PLASTIC :6655 WARM WHITE		
3	1	E90177 STEELCASE RECEPTACLE-NON CONDITIONABLE, DUPLEX,LINE 3,CTN/6 PLASTIC :6655 WARM WHITE		
4	2	LSM48K STEELCASE LIGHT-SHELF,ELEK BALLAST,32 WATT,LAMP,9' CORD,49W OPTIONS * * OPTIONS * * LGT OPTS *OPT:SHELF LIGHT COLOR OPTI PNTLIGHT NON-STD PAINTED HOUSING BASIC BASIC (PRIMARY FINISH) STD PNT STANDARD PAINT 4762 CREAM		
5	1	MPT7230 STEELCASE TABLE-PANEL MOUNT,LAM,VINYL EDGE,30X72 COLUMN :4762 CREAM		

ACCEPTED BY _____ TITLE _____ DATE _____

Barclay Dean Interiors
1917 120th Ave. N.E. • P.O. Box 3827
Bellevue, WA 98005
(425) 451-8940 • FAX (425) 454-1705

Quotation

Quote Number	Quote Date	Customer Order Number	Customer Number	Account Representative	Proj No.
8584	08/26/98		STEGSA	Christina Six	

Line	Quantity	Catalog Number/Description	Unit Price	Extended Amount
		EDGE :6631 CREAM TOP-SURF:2722 CREAM		
6	1	PWC80 STEELCASE CHANNELS-WALL,64-3/4L BASIC :4762 CREAM		
7	1	TB3018 STEELCASE TACKBOARD-PANEL SUPPORTED, BRACKETS,30X18 TKBD :F003 FIG		
8	1	X1AL24241 STEELCASE CORE UNIT-STRAIGHT,INSIDE/END SUPPORTS,24X24 BASIC :4762 CREAM PORT :6681 GROTTO V4 TOP-SURF:2722 CREAM		
9	1	X1AR24249 STEELCASE CORE UNIT-STRAIGHT,END/INSIDE SUPPORTS,24X24 BASIC :4762 CREAM PORT :6681 GROTTO V4 TOP-SURF:2722 CREAM		
10	1	X1MR24722 STEELCASE CORE UNIT-CORNER,EXTENDED,END/ INS SUPPORTS,LH,24X24X72X48 BASIC :4762 CREAM PORT :6681 GROTTO V4 TOP-SURF:2722 CREAM		
11	1	X1NL24725 STEELCASE CORE UNIT-CORNER,EXTENDED,INS/ END SUPPORTS,RH,24X24X48X72 BASIC :4762 CREAM PORT :6681 GROTTO V4 TOP-SURF:2722 CREAM		

ACCEPTED BY _____ TITLE _____ DATE _____

Barclay Dean Interiors
1917 120th Ave. N.E. • P.O. Box 3827
Bellevue, WA 98005
(425) 451-8940 • FAX (425) 454-1705

Quotation

Quote Number	Quote Date	Customer Order Number	Customer Number	Account Representative	Proj No.
8584	08/26/98		STEGSA	Christina Six	

Line	Quantity	Catalog Number/Description	Unit Price	Extended Amount
12	2	X2CN2400A2 STEELCASE PEDESTAL-2 BOX/1 FILE DWR, WATERFALL PULL,LOCK,24D BASIC :4762 CREAM LOCK :9201 POLISHED CHROME PULL :9210 COPPER KEYS :SK SPEC 2-PLUG BBF		
13	2	X2FC00729 STEELCASE CABINET-OVERHEAD,DOUBLE DOOR, LOCK,COLUMN SUPPORTS,72W BASIC :4762 CREAM COLUMN :4762 CREAM LOCK :9201 POLISHED CHROME KEYS :SK SPEC 2-PLUG B72		
14	1	X3E000729 STEELCASE SCREEN-CORE MOUNTED,CORNER,LH, 72X19 1/4 INSIDE :F003 FIG OUTSIDE :F003 FIG TOP-CAP :6681 GROTTO V4		
15	1	X3E000729 STEELCASE SCREEN-CORE MOUNTED,CORNER,LH, 72X19 1/4 INSIDE :F003 FIG OUTSIDE :F003 FIG TOP-CAP :6681 GROTTO V4		
16	2	X4IS00001 STEELCASE BASE POWER IN-SINGLE UTILITY TRUNK		
17	2	X4ZE15001 STEELCASE END CAP-SINGLE UTILITY TRUNK TRIM :4762 CREAM		

ACCEPTED BY _____ TITLE _____ DATE _____

Quotation

Barclay Dean Interiors
1917 120th Ave. N.E. • P.O. Box 3827
Bellevue, WA 98005
(425) 451-8940 • FAX (425) 454-1705

Quote Number	Quote Date	Customer Order Number	Customer Number	Account Representative	Proj No.
8584	08/26/98		STEGSA	Christina Six	

Line	Quantity	Catalog Number/Description	Unit Price	Extended Amount
18	2	X4ZW00242 STEELCASE UTILITY TRUNK-SINGLE,POWERWAY, 24W TRIM :4762 CREAM		
19	3	X4ZW00488 STEELCASE UTILITY TRUNK-SINGLE,POWERWAY, 48W TRIM :4762 CREAM		
20	2	X4ZW00726 STEELCASE UTILITY TRUNK-SINGLE,POWERWAY, 72W TRIM :4762 CREAM		

ACCEPTED BY _____ TITLE _____ DATE _____

Quotation

Barclay Dean Interiors
1917 120th Ave. N.E. • P.O. Box 3827
Bellevue, WA 98005
(425) 451-8940 • FAX (425) 454-1705

Quote Number	Quote Date	Customer Order Number	Customer Number	Account Representative	Proj No.
8585	08/26/98		STEGSA	Christina Six	

QUOTE TO: Deb Heitmeir
Steelcase Inc c/o Barclay Dean
GSA Select Acct Svcs
CH-2W-SS(GSA), 901 44th St SE
Kentwood, MI 49508

P: 1.206.246.4919

SHIP TO: Deb Heitmeir
Steelcase Inc c/o Barclay Dean
GSA Select Acct Svcs
CH-2W-SS(GSA), 901 44th St SE
Kentwood, MI 49508

P: 1.206.246.4919

Terms Net 30 Days

Line	Quantity	Catalog Number/Description	Unit Price	Extended Amount
		**********		
		* WS3A *		
		**********		
1	1	E90153 STEELCASE RECEPTACLE-NON CONDITIONABLE, DUPLEX,LINE 1,CTN/6 PLASTIC :6655 WARM WHITE		
2	1	E90160 STEELCASE RECEPTACLE-NON CONDITIONABLE, DUPLEX,LINE 2,CTN/6 PLASTIC :6655 WARM WHITE		
3	1	E90177 STEELCASE RECEPTACLE-NON CONDITIONABLE, DUPLEX,LINE 3,CTN/6 PLASTIC :6655 WARM WHITE		
4	2	LSM36K STEELCASE LIGHT-SHELF,ELEK BALLAST,25 WATT,LAMP,9' CORD,37W OPTIONS * * OPTIONS * * LGT OPTS *OPT:SHELF LIGHT COLOR OPTI PNTLIGHT NON-STD PAINTED HOUSING BASIC BASIC (PRIMARY FINISH) STD PNT STANDARD PAINT 4762 CREAM		
5	1	X1AR24249 STEELCASE CORE UNIT-STRAIGHT,END/INSIDE SUPPORTS,24X24 BASIC :4762 CREAM		

ACCEPTED BY _____ TITLE _____ DATE _____

Barclay Dean Interiors
1917 120th Ave. N.E. • P.O. Box 3827
Bellevue, WA 98005
(425) 451-8940 • FAX (425) 454-1705

Quotation

Quote Number	Quote Date	Customer Order Number	Customer Number	Account Representative	Proj No.
8585	08/26/98		STEGSA	Christina Six	

Line	Quantity	Catalog Number/Description	Unit Price	Extended Amount
		PORT :6681 GROTTO V4 TOP-SURF:2722 CREAM		
6	1	X1BI24487 STEELCASE CORE UNIT-CORNER,INSIDE/INSIDE SUPPORTS,24X24X48X48 BASIC :4762 CREAM PORT :6681 GROTTO V4 TOP-SURF:2722 CREAM		
7	1	X1DL24787 STEELCASE TABLE-JETTY,INSIDE/CONF SUPPORTS,RH,24X30X48X78 BASIC :4762 CREAM DRUM :4762 CREAM PORT :6681 GROTTO V4 TOP-SURF:2722 CREAM		
8	1	X2CN2400A2 STEELCASE PEDESTAL-2 BOX/1 FILE DWR, WATERFALL PULL,LOCK,24D BASIC :4762 CREAM LOCK :9201 POLISHED CHROME PULL :9210 COPPER KEYS :SK SPEC 1-PLUG BBF		
9	2	X2FC00482 STEELCASE CABINET-OVERHEAD,SINGLE DOOR, LOCK,COLUMN SUPPORTS,48W BASIC :4762 CREAM COLUMN :4762 CREAM LOCK :9201 POLISHED CHROME KEYS :SK SPEC 2-PLUG B48		
10	1	X3D000481 STEELCASE SCREEN-CORE MOUNTED,STRAIGHT, 48X19 1/4 INSIDE :F003 FIG OUTSIDE :F003 FIG TOP-CAP :6681 GROTTO V4		

ACCEPTED BY _____ TITLE _____ DATE _____

Barclay Dean Interiors
1917 120th Ave. N.E. • P.O. Box 3827
Bellevue, WA 98005
(425) 451-8940 • FAX (425) 454-1705

Quotation

Quote Number	Quote Date	Customer Order Number	Customer Number	Account Representative	Proj No.
8585	08/26/98		STEGSA	Christina Six	

Line	Quantity	Catalog Number/Description	Unit Price	Extended Amount
11	1	X3F000483 STEELCASE SCREEN-CORE MOUNTED,CORNER,RH, 48X19 1/4 INSIDE :F003 FIG OUTSIDE :F003 FIG TOP-CAP :6681 GROTTO V4		
12	1	X4IS00001 STEELCASE BASE POWER IN-SINGLE UTILITY TRUNK		
13	2	X4ZE15001 STEELCASE END CAP-SINGLE UTILITY TRUNK TRIM :4762 CREAM		
14	1	X4ZW00242 STEELCASE UTILITY TRUNK-SINGLE,POWERWAY, 24W TRIM :4762 CREAM		
15	3	X4ZW00488 STEELCASE UTILITY TRUNK-SINGLE,POWERWAY, 48W TRIM :4762 CREAM		

ACCEPTED BY _____ TITLE _____ DATE _____

Quotation

Barclay Dean Interiors
1917 120th Ave. N.E. • P.O. Box 3827
Bellevue, WA 98005
(425) 451-8940 • FAX (425) 454-1705

Quote Number	Quote Date	Customer Order Number	Customer Number	Account Representative	Proj No.
8586	08/26/98		STEGSA	Christina Six	

QUOTE TO: Deb Heitmeir
Steelcase Inc c/o Barclay Dean
GSA Select Acct Svcs
CH-2W-SS(GSA), 901 44th St SE
Kentwood, MI 49508

P: 1.206.246.4919

SHIP TO: Deb Heitmeir
Steelcase Inc c/o Barclay Dean
GSA Select Acct Svcs
CH-2W-SS(GSA), 901 44th St SE
Kentwood, MI 49508

P: 1.206.246.4919

Terms Net 30 Days

Line	Quantity	Catalog Number/Description	Unit Price	Extended Amount
		**********	**********	
		* WS3L	*	
		**********	**********	
1	1	E90153 STEELCASE RECEPTACLE-NON CONDITIONABLE, DUPLEX,LINE 1,CTN/6 PLASTIC :6655 WARM WHITE		
2	1	E90160 STEELCASE RECEPTACLE-NON CONDITIONABLE, DUPLEX,LINE 2,CTN/6 PLASTIC :6655 WARM WHITE		
3	1	E90177 STEELCASE RECEPTACLE-NON CONDITIONABLE, DUPLEX,LINE 3,CTN/6 PLASTIC :6655 WARM WHITE		
4	2	LSM36K STEELCASE LIGHT-SHELF,ELEK BALLAST,25 WATT,LAMP,9' CORD,37W OPTIONS * * OPTIONS * * LGT OPTS *OPT:SHELF LIGHT COLOR OPTI PNTLIGHT NON-STD PAINTED HOUSING BASIC BASIC (PRIMARY FINISH) STD PNT STANDARD PAINT 4762 CREAM		
5	1	X1AL24485 STEELCASE CORE UNIT-STRAIGHT,INSIDE/END SUPPORTS,24X48 BASIC :4762 CREAM		

ACCEPTED BY _____ TITLE _____ DATE _____

Quotation

Barclay Dean Interiors
1917 120th Ave. N.E. • P.O. Box 3827
Bellevue, WA 98005
(425) 451-8940 • FAX (425) 454-1705

Quote Number	Quote Date	Customer Order Number	Customer Number	Account Representative	Proj No.
8586	08/26/98		STEGSA	Christina Six	

Line	Quantity	Catalog Number/Description	Unit Price	Extended Amount
		PORT :6681 GROTTO V4 TOP-SURF:2722 CREAM		
6	1	X1BI24487 STEELCASE CORE UNIT-CORNER,INSIDE/INSIDE SUPPORTS,24X24X48X48 BASIC :4762 CREAM PORT :6681 GROTTO V4 TOP-SURF:2722 CREAM		
7	1	X1DR24785 STEELCASE TABLE-JETTY,CONF/INSIDE SUPPORTS,LH,30X24X78X48 BASIC :4762 CREAM DRUM :4762 CREAM PORT :6681 GROTTO V4 TOP-SURF:2722 CREAM		
8	1	X2CN2400A2 STEELCASE PEDESTAL-2 BOX/1 FILE DWR, WATERFALL PULL,LOCK,24D BASIC :4762 CREAM LOCK :9201 POLISHED CHROME PULL :9210 COPPER KEYS :SK SPEC 1-PLUG BBF		
9	2	X2FC00482 STEELCASE CABINET-OVERHEAD,SINGLE DOOR, LOCK,COLUMN SUPPORTS,48W BASIC :4762 CREAM COLUMN :4762 CREAM LOCK :9201 POLISHED CHROME KEYS :SK SPEC 2-PLUG B48		
10	1	X3D000481 STEELCASE SCREEN-CORE MOUNTED,STRAIGHT, 48X19 1/4 INSIDE :F003 FIG OUTSIDE :F003 FIG TOP-CAP :6681 GROTTO V4		

ACCEPTED BY _____ TITLE _____ DATE _____

Barclay Dean Interiors
1917 120th Ave. N.E. • P.O. Box 3827
Bellevue, WA 98005
(425) 451-8940 • FAX (425) 454-1705

Quotation

Quote Number	Quote Date	Customer Order Number	Customer Number	Account Representative	Proj No.
8586	08/26/98		STEGSA	Christina Six	

Line	Quantity	Catalog Number/Description	Unit Price	Extended Amount
11	1	X3E000482 STEELCASE SCREEN-CORE MOUNTED,CORNER,LH, 48X19 1/4 INSIDE :F003 FIG OUTSIDE :F003 FIG TOP-CAP :6681 GROTTO V4		
12	1	X4IS00001 STEELCASE BASE POWER IN-SINGLE UTILITY TRUNK		
13	2	X4ZE15001 STEELCASE END CAP-SINGLE UTILITY TRUNK TRIM :4762 CREAM		
14	4	X4ZW00488 STEELCASE UTILITY TRUNK-SINGLE,POWERWAY, 48W TRIM :4762 CREAM		

ACCEPTED BY _____ TITLE _____ DATE _____

Quotation

Barclay Dean Interiors
1917 120th Ave. N.E. • P.O. Box 3827
Bellevue, WA 98005
(425) 451-8940 • FAX (425) 454-1705

Quote Number	Quote Date	Customer Order Number	Customer Number	Account Representative	Proj No.
8587	08/26/98		STEGSA	Christina Six	

QUOTE TO: Deb Heitmeir
Steelcase Inc c/o Barclay Dean
GSA Select Acct Svcs
CH-2W-SS(GSA), 901 44th St SE
Kentwood, MI 49508

P: 1.206.246.4919

SHIP TO: Deb Heitmeir
Steelcase Inc c/o Barclay Dean
GSA Select Acct Svcs
CH-2W-SS(GSA), 901 44th St SE
Kentwood, MI 49508

P: 1.206.246.4919

Terms Net 30 Days

Line	Quantity	Catalog Number/Description	Unit Price	Extended Amount
		**********		
		* WS3R *		
		**********		
1	1	E90153 STEELCASE RECEPTACLE-NON CONDITIONABLE, DUPLEX,LINE 1,CTN/6 PLASTIC :6655 WARM WHITE		
2	1	E90160 STEELCASE RECEPTACLE-NON CONDITIONABLE, DUPLEX,LINE 2,CTN/6 PLASTIC :6655 WARM WHITE		
3	1	E90177 STEELCASE RECEPTACLE-NON CONDITIONABLE, DUPLEX,LINE 3,CTN/6 PLASTIC :6655 WARM WHITE		
4	2	LSM36K STEELCASE LIGHT-SHELF,ELEK BALLAST,25 WATT,LAMP,9' CORD,37W OPTIONS * * OPTIONS * * LGT OPTS *OPT:SHELF LIGHT COLOR OPTI PNTLIGHT NON-STD PAINTED HOUSING BASIC BASIC (PRIMARY FINISH) STD PNT STANDARD PAINT 4762 CREAM		
5	1	X1AR24483 STEELCASE CORE UNIT-STRAIGHT,END/INSIDE SUPPORTS,24X48 BASIC :4762 CREAM		

ACCEPTED BY _____ TITLE _____ DATE _____

Barclay Dean Interiors
1917 120th Ave. N.E. • P.O. Box 3827
Bellevue, WA 98005
(425) 451-8940 • FAX (425) 454-1705

Quotation

Quote Number	Quote Date	Customer Order Number	Customer Number	Account Representative	Proj No.
8587	08/26/98		STEGSA	Christina Six	

Line	Quantity	Catalog Number/Description	Unit Price	Extended Amount
		PORT :6681 GROTTO V4 TOP-SURF:2722 CREAM		
6	1	X1BI24487 STEELCASE CORE UNIT-CORNER,INSIDE/INSIDE SUPPORTS,24X24X48X48 BASIC :4762 CREAM PORT :6681 GROTTO V4 TOP-SURF:2722 CREAM		2
7	1	X1DL24787 STEELCASE TABLE-JETTY,INSIDE/CONF SUPPORTS,RH,24X30X48X78 BASIC :4762 CREAM DRUM :4762 CREAM PORT :6681 GROTTO V4 TOP-SURF:2722 CREAM		
8	1	X2CN2400A2 STEELCASE PEDESTAL-2 BOX/1 FILE DWR, WATERFALL PULL,LOCK,24D BASIC :4762 CREAM LOCK :9201 POLISHED CHROME PULL :9210 COPPER KEYS :SK SPEC 1-PLUG BBF		
9	2	X2FC00482 STEELCASE CABINET-OVERHEAD,SINGLE DOOR, LOCK,COLUMN SUPPORTS,48W BASIC :4762 CREAM COLUMN :4762 CREAM LOCK :9201 POLISHED CHROME KEYS :SK SPEC 2-PLUG B48		
10	1	X3D000481 STEELCASE SCREEN-CORE MOUNTED,STRAIGHT, 48X19 1/4 INSIDE :F003 FIG OUTSIDE :F003 FIG TOP-CAP :6681 GROTTO V4		

ACCEPTED BY _____ TITLE _____ DATE _____

Barclay Dean Interiors
1917 120th Ave. N.E. • P.O. Box 3827
Bellevue, WA 98005
(425) 451-8940 • FAX (425) 454-1705

Quotation

Quote Number	Quote Date	Customer Order Number	Customer Number	Account Representative	Proj No.
8587	08/26/98		STEGSA	Christina Six	

Line	Quantity	Catalog Number/Description	Unit Price	Extended Amount
11	1	X3F000483 STEELCASE SCREEN-CORE MOUNTED,CORNER,RH, 48X19 1/4 INSIDE :F003 FIG OUTSIDE :F003 FIG TOP-CAP :6681 GROTTO V4		
12	1	X4IS00001 STEELCASE BASE POWER IN-SINGLE UTILITY TRUNK		
13	2	X4ZE15001 STEELCASE END CAP-SINGLE UTILITY TRUNK TRIM :4762 CREAM		
14	4	X4ZW00488 STEELCASE UTILITY TRUNK-SINGLE,POWERWAY, 48W TRIM :4762 CREAM		

ACCEPTED BY _____ TITLE _____ DATE _____

Quotation

Barclay Dean Interiors
1917 120th Ave. N.E. • P.O. Box 3827
Bellevue, WA 98005
(425) 451-8940 • FAX (425) 454-1705

Quote Number	Quote Date	Customer Order Number	Customer Number	Account Representative	Proj No.
8602	08/26/98		STEGSA	Christina Six	

QUOTE TO: Deb Heitmeir
Steelcase Inc c/o Barclay Dean
GSA Select Acct Svcs
CH-2W-SS(GSA), 901 44th St SE
Kentwood, MI 49508

P: 1.206.246.4919

SHIP TO: Deb Heitmeir
Steelcase Inc c/o Barclay Dean
GSA Select Acct Svcs
CH-2W-SS(GSA), 901 44th St SE
Kentwood, MI 49508

P: 1.206.246.4919

Terms Net 30 Days

Line	Quantity	Catalog Number/Description	Unit Price	Extended Amount
		********** * WS3BR * **********		
1	1	E90153 STEELCASE RECEPTACLE-NON CONDITIONABLE, DUPLEX,LINE 1,CTN/6 PLASTIC :6655 WARM WHITE		
2	1	E90160 STEELCASE RECEPTACLE-NON CONDITIONABLE, DUPLEX,LINE 2,CTN/6 PLASTIC :6655 WARM WHITE		
3	1	E90177 STEELCASE RECEPTACLE-NON CONDITIONABLE, DUPLEX,LINE 3,CTN/6 PLASTIC :6655 WARM WHITE		
4	2	LSM36K STEELCASE LIGHT-SHELF,ELEK BALLAST,25 WATT,LAMP,9' CORD,37W OPTIONS * * OPTIONS * * LGT OPTS *OPT:SHELF LIGHT COLOR OPTI PNTLIGHT NON-STD PAINTED HOUSING BASIC BASIC (PRIMARY FINISH) STD PNT STANDARD PAINT 4762 CREAM		
5	1	X1AR24483 STEELCASE CORE UNIT-STRAIGHT,END/INSIDE SUPPORTS,24X48 BASIC :4762 CREAM		

ACCEPTED BY _____ TITLE _____ DATE _____

Barclay Dean Interiors
1917 120th Ave. N.E. • P.O. Box 3827
Bellevue, WA 98005
(425) 451-8940 • FAX (425) 454-1705

Quotation

Quote Number	Quote Date	Customer Order Number	Customer Number	Account Representative	Proj No.
8602	08/26/98		STEGSA	Christina Six	

Line	Quantity	Catalog Number/Description	Unit Price	Extended Amount
		PORT :6681 GROTTO V4 TOP-SURF:2722 CREAM		
6	1	X1BI24487 STEELCASE CORE UNIT-CORNER,INSIDE/INSIDE SUPPORTS,24X24X48X48 BASIC :4762 CREAM PORT :6681 GROTTO V4 TOP-SURF:2722 CREAM		
7	1	X1DL24660 STEELCASE TABLE-JETTY,INSIDE/CONF SUPPORTS,RH,24X30X48X66 BASIC :4762 CREAM DRUM :4762 CREAM PORT :6681 GROTTO V4 TOP-SURF:2722 CREAM		
8	1	X2CN2400A2 STEELCASE PEDESTAL-2 BOX/1 FILE DWR, WATERFALL PULL,LOCK,24D BASIC :4762 CREAM LOCK :9201 POLISHED CHROME PULL :9210 COPPER KEYS :SK SPEC 1-PLUG BBF		
9	2	X2FC00482 STEELCASE CABINET-OVERHEAD,SINGLE DOOR, LOCK,COLUMN SUPPORTS,48W BASIC :4762 CREAM COLUMN :4762 CREAM LOCK :9201 POLISHED CHROME KEYS :SK SPEC 2-PLUG B48		
10	1	X3D000481 STEELCASE SCREEN-CORE MOUNTED,STRAIGHT, 48X19 1/4 INSIDE :F003 FIG OUTSIDE :F003 FIG TOP-CAP :6681 GROTTO V4		

ACCEPTED BY _____ TITLE _____ DATE _____

Barclay Dean Interiors
1917 120th Ave. N.E. • P.O. Box 3827
Bellevue, WA 98005
(425) 451-8940 • FAX (425) 454-1705

Quotation

Quote Number	Quote Date	Customer Order Number	Customer Number	Account Representative	Proj No.
8602	08/26/98		STEGSA	Christina Six	

Line	Quantity	Catalog Number/Description	Unit Price	Extended Amount
11	1	X3F000483 STEELCASE SCREEN-CORE MOUNTED,CORNER,RH, 48X19 1/4 INSIDE :F003 FIG OUTSIDE :F003 FIG TOP-CAP :6681 GROTTO V4		
12	1	X4IS00001 STEELCASE BASE POWER IN-SINGLE UTILITY TRUNK		
13	2	X4ZE15001 STEELCASE END CAP-SINGLE UTILITY TRUNK TRIM :4762 CREAM		
14	4	X4ZW00488 STEELCASE UTILITY TRUNK-SINGLE,POWERWAY, 48W TRIM :4762 CREAM		

ACCEPTED BY _____ TITLE _____ DATE _____

Quotation

Barclay Dean Interiors
1917 120th Ave. N.E. • P.O. Box 3827
Bellevue, WA 98005
(425) 451-8940 • FAX (425) 454-1705

Quote Number	Quote Date	Customer Order Number	Customer Number	Account Representative	Proj No.
8603	08/26/98		STEGSA	Christina Six	

QUOTE TO: Deb Heitmeir
Steelcase Inc c/o Barclay Dean
GSA Select Acct Svcs
CH-2W-SS(GSA), 901 44th St SE
Kentwood, MI 49508

P: 1.206.246.4919

SHIP TO: Deb Heitmeir
Steelcase Inc c/o Barclay Dean
GSA Select Acct Svcs
CH-2W-SS(GSA), 901 44th St SE
Kentwood, MI 49508

P: 1.206.246.4919

Terms Net 30 Days

Line	Quantity	Catalog Number/Description	Unit Price	Extended Amount
		********** * WS3BL **********		
1	1	E90153 STEELCASE RECEPTACLE-NON CONDITIONABLE, DUPLEX,LINE 1,CTN/6 PLASTIC :6655 WARM WHITE		
2	1	E90160 STEELCASE RECEPTACLE-NON CONDITIONABLE, DUPLEX,LINE 2,CTN/6 PLASTIC :6655 WARM WHITE		
3	1	E90177 STEELCASE RECEPTACLE-NON CONDITIONABLE, DUPLEX,LINE 3,CTN/6 PLASTIC :6655 WARM WHITE		
4	2	LSM36K STEELCASE LIGHT-SHELF,ELEK BALLAST,25 WATT,LAMP,9' CORD,37W OPTIONS * * OPTIONS * * LGT OPTS *OPT:SHELF LIGHT COLOR OPTI PNTLIGHT NON-STD PAINTED HOUSING BASIC BASIC (PRIMARY FINISH) STD PNT STANDARD PAINT 4762 CREAM		
5	1	X1AL24485 STEELCASE CORE UNIT-STRAIGHT,INSIDE/END SUPPORTS,24X48 BASIC :4762 CREAM		

ACCEPTED BY _____ TITLE _____ DATE _____

Barclay Dean Interiors
1917 120th Ave. N.E. • P.O. Box 3827
Bellevue, WA 98005
(425) 451-8940 • FAX (425) 454-1705

Quotation

Quote Number	Quote Date	Customer Order Number	Customer Number	Account Representative	Proj No.
8603	08/26/98		STEGSA	Christina Six	

Line	Quantity	Catalog Number/Description	Unit Price	Extended Amount
		PORT :6681 GROTTO V4 TOP-SURF:2722 CREAM		
6	1	X1BI24487 STEELCASE CORE UNIT-CORNER,INSIDE/INSIDE SUPPORTS,24X24X48X48 BASIC :4762 CREAM PORT :6681 GROTTO V4 TOP-SURF:2722 CREAM		
7	1	X1DR24668 STEELCASE TABLE-JETTY,CONF/INSIDE SUPPORTS,LH,30X24X66X48 BASIC :4762 CREAM DRUM :4762 CREAM PORT :6681 GROTTO V4 TOP-SURF:2722 CREAM		
8	1	X2CN2400A2 STEELCASE PEDESTAL-2 BOX/1 FILE DWR, WATERFALL PULL,LOCK,24D BASIC :4762 CREAM LOCK :9201 POLISHED CHROME PULL :9210 COPPER KEYS :SK SPEC 1-PLUG BBF		
9	2	X2FC00482 STEELCASE CABINET-OVERHEAD,SINGLE DOOR, LOCK,COLUMN SUPPORTS,48W BASIC :4762 CREAM COLUMN :4762 CREAM LOCK :9201 POLISHED CHROME KEYS :SK SPEC 2-PLUG B48		
10	1	X3D000481 STEELCASE SCREEN-CORE MOUNTED,STRAIGHT, 48X19 1/4 INSIDE :F003 FIG OUTSIDE :F003 FIG TOP-CAP :6681 GROTTO V4		

ACCEPTED BY _____ TITLE _____ DATE _____

Barclay Dean Interiors
1917 120th Ave. N.E. • P.O. Box 3827
Bellevue, WA 98005
(425) 451-8940 • FAX (425) 454-1705

Quotation

Quote Number	Quote Date	Customer Order Number	Customer Number	Account Representative	Proj No.
8603	08/26/98		STEGSA	Christina Six	

Line	Quantity	Catalog Number/Description	Unit Price	Extended Amount
11	1	X3E000482 STEELCASE SCREEN-CORE MOUNTED,CORNER,LH, 48X19 1/4 INSIDE :F003 FIG OUTSIDE :F003 FIG TOP-CAP :6681 GROTTO V4		
12	1	X4IS00001 STEELCASE BASE POWER IN-SINGLE UTILITY TRUNK		
13	2	X4ZE15001 STEELCASE END CAP-SINGLE UTILITY TRUNK TRIM :4762 CREAM		
14	4	X4ZW00488 STEELCASE UTILITY TRUNK-SINGLE,POWERWAY, 48W TRIM :4762 CREAM		

ACCEPTED BY _____ TITLE _____ DATE _____

Quotation

Barclay Dean Interiors
1917 120th Ave. N.E. • P.O. Box 3827
Bellevue, WA 98005
(425) 451-8940 • FAX (425) 454-1705

Quote Number	Quote Date	Customer Order Number	Customer Number	Account Representative	Proj No.
8588	08/26/98		STEGSA	Christina Six	

QUOTE TO: Deb Heitmeir
Steelcase Inc c/o Barclay Dean
GSA Select Acct Svcs
CH-2W-SS(GSA), 901 44th St SE
Kentwood, MI 49508

P: 1.206.246.4919

SHIP TO: Deb Heitmeir
Steelcase Inc c/o Barclay Dean
GSA Select Acct Svcs
CH-2W-SS(GSA), 901 44th St SE
Kentwood, MI 49508

P: 1.206.246.4919

Terms Net 30 Days

Line	Quantity	Catalog Number/Description	Unit Price	Extended Amount
		**********		
		* WS4AL *		
		**********		
1	1	E90153 STEELCASE RECEPTACLE-NON CONDITIONABLE, DUPLEX,LINE 1,CTN/6 PLASTIC :6655 WARM WHITE		
2	1	E90160 STEELCASE RECEPTACLE-NON CONDITIONABLE, DUPLEX,LINE 2,CTN/6 PLASTIC :6655 WARM WHITE		
3	1	E90177 STEELCASE RECEPTACLE-NON CONDITIONABLE, DUPLEX,LINE 3,CTN/6 PLASTIC :6655 WARM WHITE		
4	1	LSM36K STEELCASE LIGHT-SHELF,ELEK BALLAST,25 WATT,LAMP,9' CORD,37W OPTIONS * * OPTIONS * * LGT OPTS *OPT:SHELF LIGHT COLOR OPTI PNTLIGHT NON-STD PAINTED HOUSING BASIC BASIC (PRIMARY FINISH) STD PNT STANDARD PAINT 4762 CREAM		
5	1	X1AL24306 STEELCASE CORE UNIT-STRAIGHT,INSIDE/END SUPPORTS,24X30 BASIC :4762 CREAM		

ACCEPTED BY _____ TITLE _____ DATE _____

Barclay Dean Interiors
1917 120th Ave. N.E. • P.O. Box 3827
Bellevue, WA 98005
(425) 451-8940 • FAX (425) 454-1705

Quotation

Quote Number	Quote Date	Customer Order Number	Customer Number	Account Representative	Proj No.
8588	08/26/98		STEGSA	Christina Six	

Line	Quantity	Catalog Number/Description	Unit Price	Extended Amount
		PORT :6681 GROTTO V4 TOP-SURF:2722 CREAM		
6	1	X1AR24249 STEELCASE CORE UNIT-STRAIGHT,END/INSIDE SUPPORTS,24X24 BASIC :4762 CREAM PORT :6681 GROTTO V4 TOP-SURF:2722 CREAM		
7	1	X1BI24425 STEELCASE CORE UNIT-CORNER,INSIDE/INSIDE SUPPORTS,24X24X42X42 BASIC :4762 CREAM PORT :6681 GROTTO V4 TOP-SURF:2722 CREAM		
8	1	X2CL2400A6 STEELCASE PEDESTAL-2 FILE DWR,WATERFALL PULL,LOCK,24D BASIC :4762 CREAM LOCK :9201 POLISHED CHROME PULL :9210 COPPER KEYS :SK SPEC 1-PLUG FF		
9	1	X2CN2400A2 STEELCASE PEDESTAL-2 BOX/1 FILE DWR, WATERFALL PULL,LOCK,24D BASIC :4762 CREAM LOCK :9201 POLISHED CHROME PULL :9210 COPPER KEYS :SK SPEC 1-PLUG BBF		
10	1	X2FC00420 STEELCASE CABINET-OVERHEAD,SINGLE DOOR, LOCK,COLUMN SUPPORTS,42W BASIC :4762 CREAM COLUMN :4762 CREAM LOCK :9201 POLISHED CHROME KEYS :SK SPEC 1-PLUG B42		

ACCEPTED BY _____ TITLE _____ DATE _____

Barclay Dean Interiors
1917 120th Ave. N.E. • P.O. Box 3827
Bellevue, WA 98005
(425) 451-8940 • FAX (425) 454-1705

Quotation

Quote Number	Quote Date	Customer Order Number	Customer Number	Account Representative	Proj No.
8588	08/26/98		STEGSA	Christina Six	

Line	Quantity	Catalog Number/Description	Unit Price	Extended Amount
11	1	X2FT00247 STEELCASE SHELF PKG-COLUMN MOUNTED, SCREEN,STRAIGHT,24W COLUMN :4762 CREAM INSIDE :F003 FIG OUTSIDE :4762 CREAM PLASTIC :6681 GROTTO V4 SHELF :4762 CREAM		
12	1	X3D000247 STEELCASE SCREEN-CORE MOUNTED,STRAIGHT, 24X19 1/4 INSIDE :F003 FIG OUTSIDE :F003 FIG TOP-CAP :6681 GROTTO V4		
13	1	X3E000420 STEELCASE SCREEN-CORE MOUNTED,CORNER,LH, 42X19 1/4 INSIDE :F003 FIG OUTSIDE :F003 FIG TOP-CAP :6681 GROTTO V4		
14	1	X4IS00001 STEELCASE BASE POWER IN-SINGLE UTILITY TRUNK		
15	2	X4ZE15001 STEELCASE END CAP-SINGLE UTILITY TRUNK TRIM :4762 CREAM		
16	1	X4ZW00242 STEELCASE UTILITY TRUNK-SINGLE,POWERWAY, 24W TRIM :4762 CREAM		
17	1	X4ZW00303 STEELCASE UTILITY TRUNK-SINGLE,POWERWAY, 30W		

ACCEPTED BY _____ TITLE _____ DATE _____

Barclay Dean Interiors
1917 120th Ave. N.E. • P.O. Box 3827
Bellevue, WA 98005
(425) 451-8940 • FAX (425) 454-1705

Quotation

Quote Number	Quote Date	Customer Order Number	Customer Number	Account Representative	Proj No.
8588	08/26/98		STEGSA	Christina Six	

Line	Quantity	Catalog Number/Description	Unit Price	Extended Amount
		TRIM :4762 CREAM		
18	2	X4ZW00425 STEELCASE UTILITY TRUNK-SINGLE,POWERWAY, 42W TRIM :4762 CREAM		

ACCEPTED BY _____ TITLE _____ DATE _____

Barclay Dean Interiors
1917 120th Ave. N.E. • P.O. Box 3827
Bellevue, WA 98005
(425) 451-8940 • FAX (425) 454-1705

Quotation

Quote Number	Quote Date	Customer Order Number	Customer Number	Account Representative	Proj No.
8589	08/26/98		STEGSA	Christina Six	

QUOTE TO: Deb Heitmeir
Steelcase Inc c/o Barclay Dean
GSA Select Acct Svcs
CH-2W-SS(GSA), 901 44th St SE
Kentwood, MI 49508

P: 1.206.246.4919

SHIP TO: Deb Heitmeir
Steelcase Inc c/o Barclay Dean
GSA Select Acct Svcs
CH-2W-SS(GSA), 901 44th St SE
Kentwood, MI 49508

P: 1.206.246.4919

Terms Net 30 Days

Line	Quantity	Catalog Number/Description	Unit Price	Extended Amount
		********** * WS4AR * **********		
1	1	E90153 STEELCASE RECEPTACLE-NON CONDITIONABLE, DUPLEX,LINE 1,CTN/6 PLASTIC :6655 WARM WHITE		
2	1	E90160 STEELCASE RECEPTACLE-NON CONDITIONABLE, DUPLEX,LINE 2,CTN/6 PLASTIC :6655 WARM WHITE	--	
3	1	E90177 STEELCASE RECEPTACLE-NON CONDITIONABLE, DUPLEX,LINE 3,CTN/6 PLASTIC :6655 WARM WHITE		
4	1	LSM24K STEELCASE LIGHT-SHELF,ELEK BALLAST,17 WATT,LAMP,9' CORD,25W OPTIONS * * OPTIONS * * LGT OPTS *OPT:SHELF LIGHT COLOR OPTI PNTLIGHT NON-STD PAINTED HOUSING BASIC BASIC (PRIMARY FINISH) STD PNT STANDARD PAINT 4762 CREAM		
5	1	LSM36K STEELCASE LIGHT-SHELF,ELEK BALLAST,25 WATT,LAMP,9' CORD,37W OPTIONS * * OPTIONS * *		

ACCEPTED BY _____ TITLE _____ DATE _____

Barclay Dean Interiors
1917 120th Ave. N.E. • P.O. Box 3827
Bellevue, WA 98005
(425) 451-8940 • FAX (425) 454-1705

Quotation

Quote Number	Quote Date	Customer Order Number	Customer Number	Account Representative	Proj No.
8589	08/26/98		STEGSA	Christina Six	

Line	Quantity	Catalog Number/Description	Unit Price	Extended Amount
		LGT OPTS *OPT:SHELF LIGHT COLOR OPTI PNTLIGHT NON-STD PAINTED HOUSING BASIC BASIC (PRIMARY FINISH) STD PNT STANDARD PAINT 4762 CREAM		
6	1	X1AR24304 STEELCASE CORE UNIT-STRAIGHT,END/INSIDE SUPPORTS,24X30 BASIC :4762 CREAM PORT :6681 GROTTO V4 TOP-SURF:2722 CREAM		
7	1	X1AL24241 STEELCASE CORE UNIT-STRAIGHT,INSIDE/END SUPPORTS,24X24 BASIC :4762 CREAM PORT :6681 GROTTO V4 TOP-SURF:2722 CREAM		
8	1	X1BI24425 STEELCASE CORE UNIT-CORNER,INSIDE/INSIDE SUPPORTS,24X24X42X42 BASIC :4762 CREAM PORT :6681 GROTTO V4 TOP-SURF:2722 CREAM		
9	1	X2CL2400A6 STEELCASE PEDESTAL-2 FILE DWR,WATERFALL PULL,LOCK,24D BASIC :4762 CREAM LOCK :9201 POLISHED CHROME PULL :9210 COPPER KEYS :SK SPEC 1-PLUG FF		
10	1	X2CN2400A2 STEELCASE PEDESTAL-2 BOX/1 FILE DWR, WATERFALL PULL,LOCK,24D BASIC :4762 CREAM LOCK :9201 POLISHED CHROME PULL :9210 COPPER KEYS :SK SPEC		

ACCEPTED BY _____ TITLE _____ DATE _____

Barclay Dean Interiors
1917 120th Ave. N.E. • P.O. Box 3827
Bellevue, WA 98005
(425) 451-8940 • FAX (425) 454-1705

Quotation

Quote Number	Quote Date	Customer Order Number	Customer Number	Account Representative	Proj No.
8589	08/26/98		STEGSA	Christina Six	

Line	Quantity	Catalog Number/Description	Unit Price	Extended Amount
		1-PLUG BBF		
11	1	X2FC00303 STEELCASE CABINET-OVERHEAD,SINGLE DOOR, LOCK,COLUMN SUPPORTS,30W BASIC :4762 CREAM COLUMN :4762 CREAM LOCK :9201 POLISHED CHROME KEYS :SK SPEC 1-PLUG B30		
12	1	X2FC00420 STEELCASE CABINET-OVERHEAD,SINGLE DOOR, LOCK,COLUMN SUPPORTS,42W BASIC :4762 CREAM COLUMN :4762 CREAM LOCK :9201 POLISHED CHROME KEYS :SK SPEC 1-PLUG B42		
13	1	X3D000302 STEELCASE SCREEN-CORE MOUNTED,STRAIGHT, 30X19 1/4 INSIDE :F003 FIG OUTSIDE :F003 FIG TOP-CAP :6681 GROTTO V4		
14	1	X3F000421 STEELCASE SCREEN-CORE MOUNTED,CORNER,RH, 42X19 1/4 INSIDE :F003 FIG OUTSIDE :F003 FIG TOP-CAP :6681 GROTTO V4		
15	1	X4IS00001 STEELCASE BASE POWER IN-SINGLE UTILITY TRUNK		
16	2	X4ZE15001 STEELCASE END CAP-SINGLE UTILITY TRUNK TRIM :4762 CREAM		

ACCEPTED BY _____ TITLE _____ DATE _____

Barclay Dean Interiors
1917 120th Ave. N.E. • P.O. Box 3827
Bellevue, WA 98005
(425) 451-8940 • FAX (425) 454-1705

Quotation

Quote Number	Quote Date	Customer Order Number	Customer Number	Account Representative	Proj No.
8589	08/26/98		STEGSA	Christina Six	

Line	Quantity	Catalog Number/Description	Unit Price	Extended Amount
17	1	X4ZW00242 STEELCASE UTILITY TRUNK-SINGLE,POWERWAY, 24W TRIM :4762 CREAM		
18	1	X4ZW00303 STEELCASE UTILITY TRUNK-SINGLE,POWERWAY, 30W TRIM :4762 CREAM		
19	2	X4ZW00425 STEELCASE UTILITY TRUNK-SINGLE,POWERWAY, 42W TRIM :4762 CREAM		

ACCEPTED BY _____ TITLE _____ DATE _____

Quotation

Barclay Dean Interiors
1917 120th Ave. N.E. • P.O. Box 3827
Bellevue, WA 98005
(425) 451-8940 • FAX (425) 454-1705

Quote Number	Quote Date	Customer Order Number	Customer Number	Account Representative	Proj No.
8590	08/26/98		STEGSA	Christina Six	

QUOTE TO: Deb Heitmeir
Steelcase Inc c/o Barclay Dean
GSA Select Acct Svcs
CH-2W-SS(GSA), 901 44th St SE
Kentwood, MI 49508

P: 1.206.246.4919

SHIP TO: Deb Heitmeir
Steelcase Inc c/o Barclay Dean
GSA Select Acct Svcs
CH-2W-SS(GSA), 901 44th St SE
Kentwood, MI 49508

P: 1.206.246.4919

Terms Net 30 Days

Line	Quantity	Catalog Number/Description	Unit Price	Extended Amount
		**********		
		* WS4L *		
		**********		
1	1	E90153 STEELCASE RECEPTACLE-NON CONDITIONABLE, DUPLEX,LINE 1,CTN/6 PLASTIC :6655 WARM WHITE		
2	1	E90160 STEELCASE RECEPTACLE-NON CONDITIONABLE, DUPLEX,LINE 2,CTN/6 PLASTIC :6655 WARM WHITE		
3	1	E90177 STEELCASE RECEPTACLE-NON CONDITIONABLE, DUPLEX,LINE 3,CTN/6 PLASTIC :6655 WARM WHITE		
4	1	LSM24K STEELCASE LIGHT-SHELF,ELEK BALLAST,17 WATT,LAMP,9' CORD,25W OPTIONS * * OPTIONS * * LGT OPTS *OPT:SHELF LIGHT COLOR OPTI PNTLIGHT NON-STD PAINTED HOUSING BASIC BASIC (PRIMARY FINISH) STD PNT STANDARD PAINT 4762 CREAM		
5	1	LSM36K STEELCASE LIGHT-SHELF,ELEK BALLAST,25 WATT,LAMP,9' CORD,37W OPTIONS * * OPTIONS * *		

ACCEPTED BY _____ TITLE _____ DATE _____

Quotation

Barclay Dean Interiors
1917 120th Ave. N.E. • P.O. Box 3827
Bellevue, WA 98005
(425) 451-8940 • FAX (425) 454-1705

Quote Number	Quote Date	Customer Order Number	Customer Number	Account Representative	Proj No.
8590	08/26/98		STEGSA	Christina Six	

Line	Quantity	Catalog Number/Description	Unit Price	Extended Amount
		LGT OPTS *OPT:SHELF LIGHT COLOR OPTI PNTLIGHT NON-STD PAINTED HOUSING BASIC BASIC (PRIMARY FINISH) STD PNT STANDARD PAINT 4762 CREAM		
6	1	X1AR24304 STEELCASE CORE UNIT-STRAIGHT,END/INSIDE SUPPORTS,24X30 BASIC :4762 CREAM PORT :6681 GROTTO V4 TOP-SURF:2722 CREAM		
7	1	X1AL24241 STEELCASE CORE UNIT-STRAIGHT,INSIDE/END SUPPORTS,24X24 BASIC :4762 CREAM PORT :6681 GROTTO V4 TOP-SURF:2722 CREAM		
8	1	X1BI24425 STEELCASE CORE UNIT-CORNER,INSIDE/INSIDE SUPPORTS,24X24X42X42 BASIC :4762 CREAM PORT :6681 GROTTO V4 TOP-SURF:2722 CREAM		
9	1	X2CL2400A6 STEELCASE PEDESTAL-2 FILE DWR,WATERFALL PULL,LOCK,24D BASIC :4762 CREAM LOCK :9201 POLISHED CHROME PULL :9210 COPPER KEYS :SK SPEC 1-PLUG FF		
10	1	X2CN2400A2 STEELCASE PEDESTAL-2 BOX/1 FILE DWR, WATERFALL PULL,LOCK,24D BASIC :4762 CREAM LOCK :9201 POLISHED CHROME PULL :9210 COPPER KEYS :SK SPEC		

ACCEPTED BY _____ TITLE _____ DATE _____

Barclay Dean Interiors
1917 120th Ave. N.E. • P.O. Box 3827
Bellevue, WA 98005
(425) 451-8940 • FAX (425) 454-1705

Quotation

Quote Number	Quote Date	Customer Order Number	Customer Number	Account Representative	Proj No.
8590	08/26/98		STEGSA	Christina Six	

Line	Quantity	Catalog Number/Description	Unit Price	Extended Amount
		1-PLUG BBF		
11	1	X2FC00303 STEELCASE CABINET-OVERHEAD,SINGLE DOOR, LOCK,COLUMN SUPPORTS,30W BASIC :4762 CREAM COLUMN :4762 CREAM LOCK :9201 POLISHED CHROME KEYS :SK SPEC 1-PLUG B30		
12	1	X2FC00420 STEELCASE CABINET-OVERHEAD,SINGLE DOOR, LOCK,COLUMN SUPPORTS,42W BASIC :4762 CREAM COLUMN :4762 CREAM LOCK :9201 POLISHED CHROME KEYS :SK SPEC 1-PLUG B42		
13	1	X3D000302 STEELCASE SCREEN-CORE MOUNTED,STRAIGHT, 30X19 1/4 INSIDE :F003 FIG OUTSIDE :F003 FIG TOP-CAP :6681 GROTTO V4		
14	1	X3F000421 STEELCASE SCREEN-CORE MOUNTED,CORNER,RH, 42X19 1/4 INSIDE :F003 FIG OUTSIDE :F003 FIG TOP-CAP :6681 GROTTO V4		
15	1	X4IS00001 STEELCASE BASE POWER IN-SINGLE UTILITY TRUNK		
16	2	X4ZE15001 STEELCASE END CAP-SINGLE UTILITY TRUNK TRIM :4762 CREAM		

ACCEPTED BY _____ TITLE _____ DATE _____

Barclay Dean Interiors
1917 120th Ave. N.E. • P.O. Box 3827
Bellevue, WA 98005
(425) 451-8940 • FAX (425) 454-1705

Quotation

Quote Number	Quote Date	Customer Order Number	Customer Number	Account Representative	Proj No.
8590	08/26/98		STEGSA	Christina Six	

Line	Quantity	Catalog Number/Description	Unit Price	Extended Amount
17	1	X4ZW00242 STEELCASE UTILITY TRUNK-SINGLE,POWERWAY, 24W TRIM :4762 CREAM		
18	1	X4ZW00303 STEELCASE UTILITY TRUNK-SINGLE,POWERWAY, 30W TRIM :4762 CREAM		
19	2	X4ZW00425 STEELCASE UTILITY TRUNK-SINGLE,POWERWAY, 42W TRIM :4762 CREAM		

ACCEPTED BY _____ TITLE _____ DATE _____

Quotation

Barclay Dean Interiors
1917 120th Ave. N.E. • P.O. Box 3827
Bellevue, WA 98005
(425) 451-8940 • FAX (425) 454-1705

Quote Number	Quote Date	Customer Order Number	Customer Number	Account Representative	Proj No.
8640	05/01/98		STEGSA	Christina Six	

QUOTE TO: Deb Heitmeir
Steelcase Inc c/o Barclay Dean
GSA Select Acct Svcs
CH-2W-SS(GSA), 901 44th St SE
Kentwood, MI 49508

P: 1.206.246.4919

SHIP TO: Deb Heitmeir
Steelcase Inc c/o Barclay Dean
GSA Select Acct Svcs
CH-2W-SS(GSA), 901 44th St SE
Kentwood, MI 49508

P: 1.206.246.4919

Terms Net 30 Days

Line	Quantity	Catalog Number/Description	Unit Price	Extended Amount
		********** * WS4R * **********		
1	1	E90153 STEELCASE RECEPTACLE-NON CONDITIONABLE, DUPLEX,LINE 1,CTN/6 PLASTIC :6655 WARM WHITE		
2	1	E90160 STEELCASE RECEPTACLE-NON CONDITIONABLE, DUPLEX,LINE 2,CTN/6 PLASTIC :6655 WARM WHITE		
3	1	E90177 STEELCASE RECEPTACLE-NON CONDITIONABLE, DUPLEX,LINE 3,CTN/6 PLASTIC :6655 WARM WHITE		
4	1	LSM24K STEELCASE LIGHT-SHELF,ELEK BALLAST,17 WATT,LAMP,9' CORD,25W OPTIONS * * OPTIONS * * LGT OPTS *OPT:SHELF LIGHT COLOR OPTI PNTLIGHT NON-STD PAINTED HOUSING BASIC BASIC (PRIMARY FINISH) STD PNT STANDARD PAINT 4762 CREAM		
5	1	LSM36K STEELCASE LIGHT-SHELF,ELEK BALLAST,25 WATT,LAMP,9' CORD,37W OPTIONS * * OPTIONS * *		

ACCEPTED BY _____ TITLE _____ DATE _____

Barclay Dean Interiors
1917 120th Ave. N.E. • P.O. Box 3827
Bellevue, WA 98005
(425) 451-8940 • FAX (425) 454-1705

Quotation

Quote Number	Quote Date	Customer Order Number	Customer Number	Account Representative	Proj No.
8640	05/01/98		STEGSA	Christina Six	

Line	Quantity	Catalog Number/Description	Unit Price	Extended Amount
		LGT OPTS *OPT:SHELF LIGHT COLOR OPTI PNTLIGHT NON-STD PAINTED HOUSING BASIC BASIC (PRIMARY FINISH) STD PNT STANDARD PAINT 4762 CREAM		
6	1	X1AL24306 STEELCASE CORE UNIT-STRAIGHT,INSIDE/END SUPPORTS,24X30 BASIC :4762 CREAM PORT :6681 GROTTO V4 TOP-SURF:2722 CREAM		
7	1	X1AR24249 STEELCASE CORE UNIT-STRAIGHT,END/INSIDE SUPPORTS,24X24 BASIC :4762 CREAM PORT :6681 GROTTO V4 TOP-SURF:2722 CREAM		
8	1	X1BI24425 STEELCASE CORE UNIT-CORNER,INSIDE/INSIDE SUPPORTS,24X24X42X42 BASIC :4762 CREAM PORT :6681 GROTTO V4 TOP-SURF:2722 CREAM		
9	1	X2CL2400A6 STEELCASE PEDESTAL-2 FILE DWR,WATERFALL PULL,LOCK,24D BASIC :4762 CREAM LOCK :9201 POLISHED CHROME PULL :9210 COPPER KEYS :SK SPEC 1-PLUG FF		
10	1	X2CN2400A2 STEELCASE PEDESTAL-2 BOX/1 FILE DWR, WATERFALL PULL,LOCK,24D BASIC :4762 CREAM LOCK :9201 POLISHED CHROME PULL :9210 COPPER KEYS :SK SPEC		

ACCEPTED BY _____ TITLE _____ DATE _____

Barclay Dean Interiors
1917 120th Ave. N.E. • P.O. Box 3827
Bellevue, WA 98005
(425) 451-8940 • FAX (425) 454-1705

Quotation

Quote Number	Quote Date	Customer Order Number	Customer Number	Account Representative	Proj No.
8640	05/01/98		STEGSA	Christina Six	

Line	Quantity	Catalog Number/Description	Unit Price	Extended Amount
		1-PLUG BBF		
11	1	X2FC00303 STEELCASE CABINET-OVERHEAD,SINGLE DOOR, LOCK,COLUMN SUPPORTS,30W BASIC :4762 CREAM COLUMN :4762 CREAM LOCK :9201 POLISHED CHROME KEYS :SK SPEC 1-PLUG B30		
12	1	X2FC00420 STEELCASE CABINET-OVERHEAD,SINGLE DOOR, LOCK,COLUMN SUPPORTS,42W BASIC :4762 CREAM COLUMN :4762 CREAM LOCK :9201 POLISHED CHROME KEYS :SK SPEC 1-PLUG B42		
13	1	X3D000302 STEELCASE SCREEN-CORE MOUNTED,STRAIGHT, 30X19 1/4 INSIDE :P003 FIG OUTSIDE :P003 FIG TOP-CAP :6681 GROTTO V4		
14	1	X3F000421 STEELCASE SCREEN-CORE MOUNTED,CORNER,RH, 42X19 1/4 INSIDE :P003 FIG OUTSIDE :P003 FIG TOP-CAP :6681 GROTTO V4		
15	1	X4IS00001 STEELCASE BASE POWER IN-SINGLE UTILITY TRUNK		
16	2	X4ZE15001 STEELCASE END CAP-SINGLE UTILITY TRUNK TRIM :4762 CREAM		

ACCEPTED BY _____ TITLE _____ DATE _____

Barclay Dean Interiors
1917 120th Ave. N.E. • P.O. Box 3827
Bellevue, WA 98005
(425) 451-8940 • FAX (425) 454-1705

Quotation

Quote Number	Quote Date	Customer Order Number	Customer Number	Account Representative	Proj No.
8640	05/01/98		STEGSA	Christina Six	

Line	Quantity	Catalog Number/Description	Unit Price	Extended Amount
		1-PLUG BBF		
11	1	X2FC00303 STEELCASE CABINET-OVERHEAD,SINGLE DOOR, LOCK,COLUMN SUPPORTS,30W BASIC :4762 CREAM COLUMN :4762 CREAM LOCK :9201 POLISHED CHROME KEYS :SK SPEC 1-PLUG B30		
12	1	X2FC00420 STEELCASE CABINET-OVERHEAD,SINGLE DOOR, LOCK,COLUMN SUPPORTS,42W BASIC :4762 CREAM COLUMN :4762 CREAM LOCK :9201 POLISHED CHROME KEYS :SK SPEC 1-PLUG B42		
13	1	X3D000302 STEELCASE SCREEN-CORE MOUNTED,STRAIGHT, 30X19 1/4 INSIDE :P003 FIG OUTSIDE :P003 FIG TOP-CAP :6681 GROTTO V4		
14	1	X3F000421 STEELCASE SCREEN-CORE MOUNTED,CORNER,RH, 42X19 1/4 INSIDE :P003 FIG OUTSIDE :P003 FIG TOP-CAP :6681 GROTTO V4		
15	1	X4IS00001 STEELCASE BASE POWER IN-SINGLE UTILITY TRUNK		
16	2	X4ZE15001 STEELCASE END CAP-SINGLE UTILITY TRUNK TRIM :4762 CREAM		

ACCEPTED BY _____ TITLE _____ DATE _____

Quotation

Barclay Dean Interiors
1917 120th Ave. N.E. • P.O. Box 3827
Bellevue, WA 98005
(425) 451-8940 • FAX (425) 454-1705

Quote Number	Quote Date	Customer Order Number	Customer Number	Account Representative	Proj No.
8640	05/01/98		STEGSA	Christina Six	

Line	Quantity	Catalog Number/Description	Unit Price	Extended Amount
17	1	X4ZW00242 STEELCASE UTILITY TRUNK-SINGLE,POWERWAY, 24W TRIM :4762 CREAM		
18	1	X4ZW00303 STEELCASE UTILITY TRUNK-SINGLE,POWERWAY, 30W TRIM :4762 CREAM		
19	2	X4ZW00425 STEELCASE UTILITY TRUNK-SINGLE,POWERWAY, 42W TRIM :4762 CREAM		

ACCEPTED BY _____ TITLE _____ DATE _____

Quotation

Barclay Dean Interiors
1917 120th Ave. N.E. • P.O. Box 3827
Bellevue, WA 98005
(425) 451-8940 • FAX (425) 454-1705

Quote Number	Quote Date	Customer Order Number	Customer Number	Account Representative	Proj No.
8592	08/26/98		STEGSA	Christina Six	

QUOTE TO: Deb Heitmeir
Steelcase Inc c/o Barclay Dean
GSA Select Acct Svcs
CH-2W-SS(GSA), 901 44th St SE
Kentwood, MI 49508

P: 1.206.246.4919

SHIP TO: Deb Heitmeir
Steelcase Inc c/o Barclay Dean
GSA Select Acct Svcs
CH-2W-SS(GSA), 901 44th St SE
Kentwood, MI 49508

P: 1.206.246.4919

Terms Net 30 Days

Line	Quantity	Catalog Number/Description	Unit Price	Extended Amount
		********** * WS4RE **********		
1	1	E90153 STEELCASE RECEPTACLE-NON CONDITIONABLE, DUPLEX,LINE 1,CTN/6 PLASTIC :6655 WARM WHITE		
2	1	E90160 STEELCASE RECEPTACLE-NON CONDITIONABLE, DUPLEX,LINE 2,CTN/6 PLASTIC :6655 WARM WHITE		
3	1	E90177 STEELCASE RECEPTACLE-NON CONDITIONABLE, DUPLEX,LINE 3,CTN/6 PLASTIC :6655 WARM WHITE		
4	1	LSM24K STEELCASE LIGHT-SHELF,ELEK BALLAST,17 WATT,LAMP,9' CORD,25W OPTIONS * * OPTIONS * * LGT OPTS *OPT:SHELF LIGHT COLOR OPTI PNTLIGHT NON-STD PAINTED HOUSING BASIC BASIC (PRIMARY FINISH) STD PNT STANDARD PAINT 4762 CREAM		
5	1	LSM36K STEELCASE LIGHT-SHELF,ELEK BALLAST,25 WATT,LAMP,9' CORD,37W OPTIONS * * OPTIONS * *		

ACCEPTED BY _____ TITLE _____ DATE _____

Barclay Dean Interiors
1917 120th Ave. N.E. • P.O. Box 3827
Bellevue, WA 98005
(425) 451-8940 • FAX (425) 454-1705

Quotation

Quote Number	Quote Date	Customer Order Number	Customer Number	Account Representative	Proj No.
8592	08/26/98		STEGSA	Christina Six	

Line	Quantity	Catalog Number/Description	Unit Price	Extended Amount
		LGT OPTS *OPT:SHELF LIGHT COLOR OPTI PNTLIGHT NON-STD PAINTED HOUSING BASIC BASIC (PRIMARY FINISH) STD PNT STANDARD PAINT 4762 CREAM		
6	1	X1AL24306 STEELCASE CORE UNIT-STRAIGHT,INSIDE/END SUPPORTS,24X30 BASIC :4762 CREAM PORT :6681 GROTTO V4 TOP-SURF:2722 CREAM		
7	1	X1AR24249 STEELCASE CORE UNIT-STRAIGHT,END/INSIDE SUPPORTS,24X24 BASIC :4762 CREAM PORT :6681 GROTTO V4 TOP-SURF:2722 CREAM		
8	1	X1BI24425 STEELCASE CORE UNIT-CORNER,INSIDE/INSIDE SUPPORTS,24X24X42X42 BASIC :4762 CREAM PORT :6681 GROTTO V4 TOP-SURF:2722 CREAM		
9	1	X2CL2400A6 STEELCASE PEDESTAL-2 FILE DWR,WATERFALL PULL,LOCK,24D BASIC :4762 CREAM LOCK :9201 POLISHED CHROME PULL :9210 COPPER KEYS :SK SPEC 1-PLUG FF		
10	1	X2CN2400A2 STEELCASE PEDESTAL-2 BOX/1 FILE DWR, WATERFALL PULL,LOCK,24D BASIC :4762 CREAM LOCK :9201 POLISHED CHROME PULL :9210 COPPER KEYS :SK SPEC		

ACCEPTED BY _____ TITLE _____ DATE _____

Barclay Dean Interiors
1917 120th Ave. N.E. • P.O. Box 3827
Bellevue, WA 98005
(425) 451-8940 • FAX (425) 454-1705

Quotation

Quote Number	Quote Date	Customer Order Number	Customer Number	Account Representative	Proj No.
8592	08/26/98		STEGSA	Christina Six	

Line	Quantity	Catalog Number/Description	Unit Price	Extended Amount
		1-PLUG BBF		
11	1	X2FC00303 STEELCASE CABINET-OVERHEAD,SINGLE DOOR, LOCK,COLUMN SUPPORTS,30W BASIC :4762 CREAM COLUMN :4762 CREAM LOCK :9201 POLISHED CHROME KEYS :SK SPEC 1-PLUG B30		
12	1	X2FC00420 STEELCASE CABINET-OVERHEAD,SINGLE DOOR, LOCK,COLUMN SUPPORTS,42W BASIC :4762 CREAM COLUMN :4762 CREAM LOCK :9201 POLISHED CHROME KEYS :SK SPEC 1-PLUG B42		
13	1	X3D000247 STEELCASE SCREEN-CORE MOUNTED,STRAIGHT, 24X19 1/4 INSIDE :F003 FIG OUTSIDE :F003 FIG TOP-CAP :6681 GROTTO V4		
14	1	X3D000302 STEELCASE SCREEN-CORE MOUNTED,STRAIGHT, 30X19 1/4 INSIDE :F003 FIG OUTSIDE :F003 FIG TOP-CAP :6681 GROTTO V4		
15	1	X3E000420 STEELCASE SCREEN-CORE MOUNTED,CORNER,LH, 42X19 1/4 INSIDE :F003 FIG OUTSIDE :F003 FIG TOP-CAP :6681 GROTTO V4		

ACCEPTED BY _____ TITLE _____ DATE _____

Barclay Dean Interiors
1917 120th Ave. N.E. • P.O. Box 3827
Bellevue, WA 98005
(425) 451-8940 • FAX (425) 454-1705

Quotation

Quote Number	Quote Date	Customer Order Number	Customer Number	Account Representative	Proj No.
8592	08/26/98		STEGSA	Christina Six	

Line	Quantity	Catalog Number/Description	Unit Price	Extended Amount
16	1	X3F000421 STEELCASE SCREEN-CORE MOUNTED,CORNER,RH, 42X19 1/4 INSIDE :F003 FIG OUTSIDE :F003 FIG TOP-CAP :6681 GROTTO V4		
17	1	X4IS00001 STEELCASE BASE POWER IN-SINGLE UTILITY TRUNK		
18	2	X4ZE15001 STEELCASE END CAP-SINGLE UTILITY TRUNK TRIM :4762 CREAM		
19	1	X4ZW00242 STEELCASE UTILITY TRUNK-SINGLE,POWERWAY, 24W TRIM :4762 CREAM		
20	1	X4ZW00303 STEELCASE UTILITY TRUNK-SINGLE,POWERWAY, 30W TRIM :4762 CREAM		
21	2	X4ZW00425 STEELCASE UTILITY TRUNK-SINGLE,POWERWAY, 42W TRIM :4762 CREAM		

ACCEPTED BY _____ TITLE _____ DATE _____

Quotation

Barclay Dean Interiors
1917 120th Ave. N.E. • P.O. Box 3827
Bellevue, WA 98005
(425) 451-8940 • FAX (425) 454-1705

Quote Number	Quote Date	Customer Order Number	Customer Number	Account Representative	Proj No.
8594	08/26/98		STEGSA	Christina Six	

QUOTE TO: Deb Heitmeir
Steelcase Inc c/o Barclay Dean
GSA Select Acct Svcs
CH-2W-SS(GSA), 901 44th St SE
Kentwood, MI 49508

P: 1.206.246.4919

SHIP TO: Deb Heitmeir
Steelcase Inc c/o Barclay Dean
GSA Select Acct Svcs
CH-2W-SS(GSA), 901 44th St SE
Kentwood, MI 49508

P: 1.206.246.4919

Terms Net 30 Days

Line	Quantity	Catalog Number/Description	Unit Price	Extended Amount
		**********		
		* WS5 *		
		**********		
1	2	E90153 STEELCASE RECEPTACLE-NON CONDITIONABLE, DUPLEX,LINE 1,CTN/6 PLASTIC :6655 WARM WHITE		
2	2	E90160 STEELCASE RECEPTACLE-NON CONDITIONABLE, DUPLEX,LINE 2,CTN/6 PLASTIC :6655 WARM WHITE		
3	2	E90177 STEELCASE RECEPTACLE-NON CONDITIONABLE, DUPLEX,LINE 3,CTN/6 PLASTIC :6655 WARM WHITE		
4	2	LSM48K STEELCASE LIGHT-SHELF,ELEK BALLAST,32 WATT,LAMP,9' CORD,49W OPTIONS * * OPTIONS * * LGT OPTS *OPT:SHELF LIGHT COLOR OPTI PNTLIGHT NON-STD PAINTED HOUSING BASIC BASIC (PRIMARY FINISH) STD PNT STANDARD PAINT 4762 CREAM		
5	1	X1AL24241 STEELCASE CORE UNIT-STRAIGHT,INSIDE/END SUPPORTS,24X24 BASIC :4762 CREAM		

ACCEPTED BY _____ TITLE _____ DATE _____

Barclay Dean Interiors
1917 120th Ave. N.E. • P.O. Box 3827
Bellevue, WA 98005
(425) 451-8940 • FAX (425) 454-1705

Quotation

Quote Number	Quote Date	Customer Order Number	Customer Number	Account Representative	Proj No.
8594	08/26/98		STEGSA	Christina Six	

Line	Quantity	Catalog Number/Description	Unit Price	Extended Amount
		PORT :6681 GROTTO V4 TOP-SURF:2722 CREAM		
6	1	X1AR24249 STEELCASE CORE UNIT-STRAIGHT,END/INSIDE SUPPORTS,24X24 BASIC :4762 CREAM PORT :6681 GROTTO V4 TOP-SURF:2722 CREAM		
7	1	X1E030487 STEELCASE TABLE-SPANNER,30X48 DRUM :4762 CREAM TOP-SURF:2722 CREAM		
8	1	X1MI24725 STEELCASE CORE UNIT-CORNER,EXTENDED,INS/ INS SUPPORTS,LH,24X24X72X48 BASIC :4762 CREAM PORT :6681 GROTTO V4 TOP-SURF:2722 CREAM		
9	1	X1NI24726 STEELCASE CORE UNIT-CORNER,EXTENDED,INS/ INS SUPPORTS,RH,24X24X48X72 BASIC :4762 CREAM PORT :6681 GROTTO V4 TOP-SURF:2722 CREAM		
10	2	X2CN2400A2 STEELCASE PEDESTAL-2 BOX/1 FILE DWR, WATERFALL PULL,LOCK,24D BASIC :4762 CREAM LOCK :9201 POLISHED CHROME PULL :9210 COPPER KEYS :SK SPEC 2-PLUG BBF		
11	2	X2FC00729 STEELCASE CABINET-OVERHEAD,DOUBLE DOOR, LOCK,COLUMN SUPPORTS,72W		

ACCEPTED BY _____ TITLE _____ DATE _____

Barclay Dean Interiors
1917 120th Ave. N.E. • P.O. Box 3827
Bellevue, WA 98005
(425) 451-8940 • FAX (425) 454-1705

Quotation

Quote Number	Quote Date	Customer Order Number	Customer Number	Account Representative	Proj No.
8594	08/26/98		STEGSA	Christina Six	

Line	Quantity	Catalog Number/Description	Unit Price	Extended Amount
		BASIC :4762 CREAM COLUMN :4762 CREAM LOCK :9201 POLISHED CHROME KEYS :SK SPEC 2-PLUG B72		
12	2	X3D000247 STEELCASE SCREEN-CORE MOUNTED,STRAIGHT, 24X19 1/4 INSIDE :F003 FIG OUTSIDE :F003 FIG TOP-CAP :6681 GROTTO V4		
13	1	X3E000482 STEELCASE SCREEN-CORE MOUNTED,CORNER,LH, 48X19 1/4 INSIDE :F003 FIG OUTSIDE :F003 FIG TOP-CAP :6681 GROTTO V4		
14	1	X3E000729 STEELCASE SCREEN-CORE MOUNTED,CORNER,LH, 72X19 1/4 INSIDE :F003 FIG OUTSIDE :F003 FIG TOP-CAP :6681 GROTTO V4		
15	1	X3F000483 STEELCASE SCREEN-CORE MOUNTED,CORNER,RH, 48X19 1/4 INSIDE :F003 FIG OUTSIDE :F003 FIG TOP-CAP :6681 GROTTO V4		
16	1	X3F000720 STEELCASE SCREEN-CORE MOUNTED,CORNER,RH, 72X19 1/4 INSIDE :F003 FIG OUTSIDE :F003 FIG TOP-CAP :6681 GROTTO V4		

ACCEPTED BY _____ TITLE _____ DATE _____

Quotation

Barclay Dean Interiors
1917 120th Ave. N.E. • P.O. Box 3827
Bellevue, WA 98005
(425) 451-8940 • FAX (425) 454-1705

Quote Number	Quote Date	Customer Order Number	Customer Number	Account Representative	Proj No.
8594	08/26/98		STEGSA	Christina Six	

Line	Quantity	Catalog Number/Description	Unit Price	Extended Amount
17	1	X4DJ00307 STEELCASE JUMPER-30L,SINGLE UTILITY TRUNK		
18	1	X4IS00001 STEELCASE BASE POWER IN-SINGLE UTILITY TRUNK		
19	2	X4ZE15001 STEELCASE END CAP-SINGLE UTILITY TRUNK TRIM :4762 CREAM		
20	2	X4ZW00242 STEELCASE UTILITY TRUNK-SINGLE,POWERWAY, 24W TRIM :4762 CREAM		
21	2	X4ZW00488 STEELCASE UTILITY TRUNK-SINGLE,POWERWAY, 48W TRIM :4762 CREAM		
22	2	X4ZW00726 STEELCASE UTILITY TRUNK-SINGLE,POWERWAY, 72W TRIM :4762 CREAM		

ACCEPTED BY _____ TITLE _____ DATE _____

Quotation

Barclay Dean Interiors
1917 120th Ave. N.E. • P.O. Box 3827
Bellevue, WA 98005
(425) 451-8940 • FAX (425) 454-1705

Quote Number	Quote Date	Customer Order Number	Customer Number	Account Representative	Proj No.
8593	08/26/98		STEGSA	Christina Six	

QUOTE TO: Deb Heitmeir
Steelcase Inc c/o Barclay Dean
GSA Select Acct Svcs
CH-2W-SS(GSA), 901 44th St SE
Kentwood, MI 49508

P: 1.206.246.4919

SHIP TO: Deb Heitmeir
Steelcase Inc c/o Barclay Dean
GSA Select Acct Svcs
CH-2W-SS(GSA), 901 44th St SE
Kentwood, MI 49508

P: 1.206.246.4919

Terms Net 30 Days

Line	Quantity	Catalog Number/Description	Unit Price	Extended Amount
		**********		
		* WS6 *		
		**********		
1	1	E90177 STEELCASE RECEPTACLE-NON CONDITIONABLE, DUPLEX,LINE 3,CTN/6 PLASTIC :6655 WARM WHITE		
2	1	LSM48K STEELCASE LIGHT-SHELF,ELEK BALLAST,32 WATT,LAMP,9' CORD,49W OPTIONS * * OPTIONS * * LGT OPTS *OPT:SHELF LIGHT COLOR OPTI PNTLIGHT NON-STD PAINTED HOUSING BASIC BASIC (PRIMARY FINISH) STD PNT STANDARD PAINT 4762 CREAM		
3	1	X1AE30786 STEELCASE CORE UNIT-STRAIGHT,END/END SUPPORTS,30X78 BASIC :4762 CREAM PORT :6681 GROTTO V4 TOP-SURF:2722 CREAM		
4	1	X2CL2400A6 STEELCASE PEDESTAL-2 FILE DWR,WATERFALL PULL,LOCK,24D BASIC :4762 CREAM LOCK :9201 POLISHED CHROME PULL :9210 COPPER KEYS :SK SPEC 1-PLUG FF		

ACCEPTED BY _____ TITLE _____ DATE _____

Quotation

Barclay Dean Interiors
1917 120th Ave. N.E. • P.O. Box 3827
Bellevue, WA 98005
(425) 451-8940 • FAX (425) 454-1705

Quote Number	Quote Date	Customer Order Number	Customer Number	Account Representative	Proj No.
8593	08/26/98		STEGSA	Christina Six	

Line	Quantity	Catalog Number/Description	Unit Price	Extended Amount
5	1	X2CN2400A2 STEELCASE PEDESTAL-2 BOX/1 FILE DWR, WATERFALL PULL,LOCK,24D BASIC :4762 CREAM LOCK :9201 POLISHED CHROME PULL :9210 COPPER KEYS :SK SPEC 1-PLUG BBF		
6	1	X2FC00781 STEELCASE CABINET-OVERHEAD,DOUBLE DOOR, LOCK,COLUMN SUPPORTS,78W BASIC :4762 CREAM COLUMN :4762 CREAM LOCK :9201 POLISHED CHROME KEYS :SK SPEC 1-PLUG B78		
7	1	X3D000780 STEELCASE SCREEN-CORE MOUNTED,STRAIGHT, 78X19 1/4 INSIDE :F003 FIG OUTSIDE :F003 FIG TOP-CAP :6681 GROTTO V4		
8	1	X4IS00001 STEELCASE BASE POWER IN-SINGLE UTILITY TRUNK		
9	2	X4ZE15001 STEELCASE END CAP-SINGLE UTILITY TRUNK TRIM :4762 CREAM		
10	1	X4ZW00789 STEELCASE UTILITY TRUNK-SINGLE,POWERWAY, 78W TRIM :4762 CREAM		

ACCEPTED BY _____ TITLE _____ DATE _____

Quotation

Barclay Dean Interiors
1917 120th Ave. N.E. • P.O. Box 3827
Bellevue, WA 98005
(425) 451-8940 • FAX (425) 454-1705

Quote Number	Quote Date	Customer Order Number	Customer Number	Account Representative	Proj No.
8595	08/26/98		STEGSA	Christina Six	

QUOTE TO: Deb Heitmeir
Steelcase Inc c/o Barclay Dean
GSA Select Acct Svcs
CH-2W-SS(GSA), 901 44th St SE
Kentwood, MI 49508

P: 1.206.246.4919

SHIP TO: Deb Heitmeir
Steelcase Inc c/o Barclay Dean
GSA Select Acct Svcs
CH-2W-SS(GSA), 901 44th St SE
Kentwood, MI 49508

P: 1.206.246.4919

Terms Net 30 Days

Line	Quantity	Catalog Number/Description	Unit Price	Extended Amount
		********** * WS7L * **********		
1	1	E90153 STEELCASE RECEPTACLE-NON CONDITIONABLE, DUPLEX,LINE 1,CTN/6 PLASTIC :6655 WARM WHITE		
2	1	E90160 STEELCASE RECEPTACLE-NON CONDITIONABLE, DUPLEX,LINE 2,CTN/6 PLASTIC :6655 WARM WHITE		
3	1	E90177 STEELCASE RECEPTACLE-NON CONDITIONABLE, DUPLEX,LINE 3,CTN/6 PLASTIC :6655 WARM WHITE		
4	1	LSM48K STEELCASE LIGHT-SHELF,ELEK BALLAST,32 WATT,LAMP,9' CORD,49W OPTIONS * * OPTIONS * * LGT OPTS *OPT:SHELF LIGHT COLOR OPTI PNTLIGHT NON-STD PAINTED HOUSING BASIC BASIC (PRIMARY FINISH) STD PNT STANDARD PAINT 4762 CREAM		
5	1	X1AL24241 STEELCASE CORE UNIT-STRAIGHT,INSIDE/END SUPPORTS,24X24 BASIC :4762 CREAM		

ACCEPTED BY _____ TITLE _____ DATE _____

Quotation

Barclay Dean Interiors
1917 120th Ave. N.E. • P.O. Box 3827
Bellevue, WA 98005
(425) 451-8940 • FAX (425) 454-1705

Quote Number	Quote Date	Customer Order Number	Customer Number	Account Representative	Proj No.
8595	08/26/98		STEGSA	Christina Six	

Line	Quantity	Catalog Number/Description	Unit Price	Extended Amount
		PORT :6681 GROTTO V4 TOP-SURF:2722 CREAM		
6	1	X1MR24722 STEELCASE CORE UNIT-CORNER,EXTENDED,END/ INS SUPPORTS,LH,24X24X72X48 BASIC :4762 CREAM PORT :6681 GROTTO V4 TOP-SURF:2722 CREAM		
7	1	X2CN2400A2 STEELCASE PEDESTAL-2 BOX/1 FILE DWR, WATERFALL PULL,LOCK,24D BASIC :4762 CREAM LOCK :9201 POLISHED CHROME PULL :9210 COPPER KEYS :SK SPEC 1-PLUG BBF		
8	1	X2FC00729 STEELCASE CABINET-OVERHEAD,DOUBLE DOOR, LOCK,COLUMN SUPPORTS,72W BASIC :4762 CREAM COLUMN :4762 CREAM LOCK :9201 POLISHED CHROME KEYS :SK SPEC 1-PLUG B72		
9	1	X3E000729 STEELCASE SCREEN-CORE MOUNTED,CORNER,LH, 72X19 1/4 INSIDE :F003 FIG OUTSIDE :F003 FIG TOP-CAP :6681 GROTTO V4		
10	1	X4IS00001 STEELCASE BASE POWER IN-SINGLE UTILITY TRUNK		
11	2	X4ZE15001 STEELCASE END CAP-SINGLE UTILITY TRUNK		

ACCEPTED BY _____ TITLE _____ DATE _____

Quotation

Barclay Dean Interiors
1917 120th Ave. N.E. • P.O. Box 3827
Bellevue, WA 98005
(425) 451-8940 • FAX (425) 454-1705

Quote Number	Quote Date	Customer Order Number	Customer Number	Account Representative	Proj No.
8595	08/26/98		STEGSA	Christina Six	

Line	Quantity	Catalog Number/Description	Unit Price	Extended Amount
		TRIM :4762 CREAM		
12	1	X4ZW00242 STEELCASE UTILITY TRUNK-SINGLE,POWERWAY, 24W TRIM :4762 CREAM		
13	1	X4ZW00488 STEELCASE UTILITY TRUNK-SINGLE,POWERWAY, 48W TRIM :4762 CREAM		
14	1	X4ZW00726 STEELCASE UTILITY TRUNK-SINGLE,POWERWAY, 72W TRIM :4762 CREAM		

ACCEPTED BY _____ TITLE _____ DATE _____

Quotation

Barclay Dean Interiors
1917 120th Ave. N.E. • P.O. Box 3827
Bellevue, WA 98005
(425) 451-8940 • FAX (425) 454-1705

Quote Number	Quote Date	Customer Order Number	Customer Number	Account Representative	Proj No.
8596	08/26/98		STEGSA	Christina Six	

QUOTE TO: Deb Heitmeir
Steelcase Inc c/o Barclay Dean
GSA Select Acct Svcs
CH-2W-SS(GSA), 901 44th St SE
Kentwood, MI 49508

P: 1.206.246.4919

SHIP TO: Deb Heitmeir
Steelcase Inc c/o Barclay Dean
GSA Select Acct Svcs
CH-2W-SS(GSA), 901 44th St SE
Kentwood, MI 49508

P: 1.206.246.4919

Terms Net 30 Days

Line	Quantity	Catalog Number/Description	Unit Price	Extended Amount
		********** * WS7R * **********		
1	1	E90153 STEELCASE RECEPTACLE-NON CONDITIONABLE, DUPLEX,LINE 1,CTN/6 PLASTIC :6655 WARM WHITE		
2	1	E90160 STEELCASE RECEPTACLE-NON CONDITIONABLE, DUPLEX,LINE 2,CTN/6 PLASTIC :6655 WARM WHITE		
3	1	E90177 STEELCASE RECEPTACLE-NON CONDITIONABLE, DUPLEX,LINE 3,CTN/6 PLASTIC :6655 WARM WHITE		
4	1	LSM48K STEELCASE LIGHT-SHELF,ELEK BALLAST,32 WATT,LAMP,9' CORD,49W OPTIONS * * OPTIONS * * LGT OPTS *OPT:SHELF LIGHT COLOR OPTI PNTLIGHT NON-STD PAINTED HOUSING BASIC BASIC (PRIMARY FINISH) STD PNT STANDARD PAINT 4762 CREAM		
5	1	X1AR24249 STEELCASE CORE UNIT-STRAIGHT,END/INSIDE SUPPORTS,24X24 BASIC :4762 CREAM		

ACCEPTED BY _____ TITLE _____ DATE _____

Barclay Dean Interiors
1917 120th Ave. N.E. • P.O. Box 3827
Bellevue, WA 98005
(425) 451-8940 • FAX (425) 454-1705

Quotation

Quote Number	Quote Date	Customer Order Number	Customer Number	Account Representative	Proj No.
8596	08/26/98		STEGSA	Christina Six	

Line	Quantity	Catalog Number/Description	Unit Price	Extended Amount
		PORT :6681 GROTTO V4 TOP-SURF:2722 CREAM		
6	1	X1NL24725 STEELCASE CORE UNIT-CORNER,EXTENDED,INS/ END SUPPORTS,RH,24X24X48X72 BASIC :4762 CREAM PORT :6681 GROTTO V4 TOP-SURF:2722 CREAM		
7	1	X2CN2400A2 STEELCASE PEDESTAL-2 BOX/1 FILE DWR, WATERFALL PULL,LOCK,24D BASIC :4762 CREAM LOCK :9201 POLISHED CHROME PULL :9210 COPPER KEYS :SK SPEC 1-PLUG BBF		
8	1	X2FC00729 STEELCASE CABINET-OVERHEAD,DOUBLE DOOR, LOCK,COLUMN SUPPORTS,72W BASIC :4762 CREAM COLUMN :4762 CREAM LOCK :9201 POLISHED CHROME KEYS :SK SPEC 1-PLUG B72		
9	1	X3E000729 STEELCASE SCREEN-CORE MOUNTED,CORNER,LH, 72X19 1/4 INSIDE :F003 FIG OUTSIDE :F003 FIG TOP-CAP :6681 GROTTO V4		
10	1	X4IS00001 STEELCASE BASE POWER IN-SINGLE UTILITY TRUNK		
11	2	X4ZE15001 STEELCASE END CAP-SINGLE UTILITY TRUNK		

ACCEPTED BY _____ TITLE _____ DATE _____

Barclay Dean Interiors
1917 120th Ave. N.E. • P.O. Box 3827
Bellevue, WA 98005
(425) 451-8940 • FAX (425) 454-1705

Quotation

Quote Number	Quote Date	Customer Order Number	Customer Number	Account Representative	Proj No.
8596	08/26/98		STEGSA	Christina Six	

Line	Quantity	Catalog Number/Description	Unit Price	Extended Amount
		TRIM :4762 CREAM		
12	1	X4ZW00242 STEELCASE UTILITY TRUNK-SINGLE,POWERWAY, 24W TRIM :4762 CREAM		
13	1	X4ZW00488 STEELCASE UTILITY TRUNK-SINGLE,POWERWAY, 48W TRIM :4762 CREAM		
14	1	X4ZW00726 STEELCASE UTILITY TRUNK-SINGLE,POWERWAY, 72W TRIM :4762 CREAM		

ACCEPTED BY _____ TITLE _____ DATE _____

Barclay Dean Interiors
1917 120th Ave. N.E. • P.O. Box 3827
Bellevue, WA 98005
(425) 451-8940 • FAX (425) 454-1705

Quotation

Quote Number	Quote Date	Customer Order Number	Customer Number	Account Representative	Proj No.
8597	08/26/98		STEGSA	Christina Six	

QUOTE TO: Deb Heitmeir
Steelcase Inc c/o Barclay Dean
GSA Select Acct Svcs
CH-2W-SS(GSA), 901 44th St SE
Kentwood, MI 49508

P: 1.206.246.4919

SHIP TO: Deb Heitmeir
Steelcase Inc c/o Barclay Dean
GSA Select Acct Svcs
CH-2W-SS(GSA), 901 44th St SE
Kentwood, MI 49508

P: 1.206.246.4919

Terms Net 30 Days

Line	Quantity	Catalog Number/Description	Unit Price	Extended Amount
		**********		
		* WS7LE *		
		**********		
1	1	E90153 STEELCASE RECEPTACLE-NON CONDITIONABLE, DUPLEX,LINE 1,CTN/6 PLASTIC :6655 WARM WHITE		
2	1	E90160 STEELCASE RECEPTACLE-NON CONDITIONABLE, DUPLEX,LINE 2,CTN/6 PLASTIC :6655 WARM WHITE		
3	1	E90177 STEELCASE RECEPTACLE-NON CONDITIONABLE, DUPLEX,LINE 3,CTN/6 PLASTIC :6655 WARM WHITE		
4	1	LSM48K STEELCASE LIGHT-SHELF,ELEK BALLAST,32 WATT,LAMP,9' CORD,49W OPTIONS * * OPTIONS * * LGT OPTS *OPT:SHELF LIGHT COLOR OPTI PNTLIGHT NON-STD PAINTED HOUSING BASIC BASIC (PRIMARY FINISH) STD PNT STANDARD PAINT 4762 CREAM		
5	1	X1AL24241 STEELCASE CORE UNIT-STRAIGHT,INSIDE/END SUPPORTS,24X24 BASIC :4762 CREAM		

ACCEPTED BY _____ TITLE _____ DATE _____

Barclay Dean Interiors
1917 120th Ave. N.E. • P.O. Box 3827
Bellevue, WA 98005
(425) 451-8940 • FAX (425) 454-1705

Quotation

Quote Number	Quote Date	Customer Order Number	Customer Number	Account Representative	Proj No.
8597	08/26/98		STEGSA	Christina Six	

Line	Quantity	Catalog Number/Description	Unit Price	Extended Amount
11	1	X3F000483 STEELCASE SCREEN-CORE MOUNTED,CORNER,RH, 48X19 1/4 INSIDE :F003 FIG OUTSIDE :F003 FIG TOP-CAP :6681 GROTTO V4		
12	1	X4IS00001 STEELCASE BASE POWER IN-SINGLE UTILITY TRUNK		
13	2	X4ZE15001 STEELCASE END CAP-SINGLE UTILITY TRUNK TRIM :4762 CREAM		
14	1	X4ZW00242 STEELCASE UTILITY TRUNK-SINGLE,POWERWAY, 24W TRIM :4762 CREAM		
15	1	X4ZW00488 STEELCASE UTILITY TRUNK-SINGLE,POWERWAY, 48W TRIM :4762 CREAM		
16	1	X4ZW00726 STEELCASE UTILITY TRUNK-SINGLE,POWERWAY, 72W TRIM :4762 CREAM		

ACCEPTED BY _____ TITLE _____ DATE _____

Quotation

Barclay Dean Interiors
1917 120th Ave. N.E. • P.O. Box 3827
Bellevue, WA 98005
(425) 451-8940 • FAX (425) 454-1705

Quote Number	Quote Date	Customer Order Number	Customer Number	Account Representative	Proj No.
8598	08/26/98		STEGSA	Christina Six	

QUOTE TO: Deb Heitmeir
Steelcase Inc c/o Barclay Dean
GSA Select Acct Svcs
CH-2W-SS(GSA), 901 44th St SE
Kentwood, MI 49508

P: 1.206.246.4919

SHIP TO: Deb Heitmeir
Steelcase Inc c/o Barclay Dean
GSA Select Acct Svcs
CH-2W-SS(GSA), 901 44th St SE
Kentwood, MI 49508

P: 1.206.246.4919

Terms Net 30 Days

Line	Quantity	Catalog Number/Description	Unit Price	Extended Amount
		********** * WS7RE * **********		
1	1	E90153 STEELCASE RECEPTACLE-NON CONDITIONABLE, DUPLEX,LINE 1,CTN/6 PLASTIC :6655 WARM WHITE		
2	1	E90160 STEELCASE RECEPTACLE-NON CONDITIONABLE, DUPLEX,LINE 2,CTN/6 PLASTIC :6655 WARM WHITE		
3	1	E90177 STEELCASE RECEPTACLE-NON CONDITIONABLE, DUPLEX,LINE 3,CTN/6 PLASTIC :6655 WARM WHITE		
4	1	LSM48K STEELCASE LIGHT-SHELF,ELEK BALLAST,32 WATT,LAMP,9' CORD,49W OPTIONS * * OPTIONS * * LGT OPTS *OPT:SHELF LIGHT COLOR OPTI PNTLIGHT NON-STD PAINTED HOUSING BASIC BASIC (PRIMARY FINISH) STD PNT STANDARD PAINT 4762 CREAM		
5	1	X1AR24249 STEELCASE CORE UNIT-STRAIGHT,END/INSIDE SUPPORTS,24X24 BASIC :4762 CREAM		

ACCEPTED BY _____ TITLE _____ DATE _____

Barclay Dean Interiors
1917 120th Ave. N.E. • P.O. Box 3827
Bellevue, WA 98005
(425) 451-8940 • FAX (425) 454-1705

Quotation

Quote Number	Quote Date	Customer Order Number	Customer Number	Account Representative	Proj No.
8598	08/26/98		STEGSA	Christina Six	

Line	Quantity	Catalog Number/Description	Unit Price	Extended Amount
		PORT :6681 GROTTO V4 TOP-SURF:2722 CREAM		
6	1	X1NL24725 STEELCASE CORE UNIT-CORNER,EXTENDED,INS/ END SUPPORTS,RH,24X24X48X72 BASIC :4762 CREAM PORT :6681 GROTTO V4 TOP-SURF:2722 CREAM		
7	1	X2CN2400A2 STEELCASE PEDESTAL-2 BOX/1 FILE DWR, WATERFALL PULL,LOCK,24D BASIC :4762 CREAM LOCK :9201 POLISHED CHROME PULL :9210 COPPER KEYS :SK SPEC 1-PLUG BBF		
8	1	X2FC00729 STEELCASE CABINET-OVERHEAD,DOUBLE DOOR, LOCK,COLUMN SUPPORTS,72W BASIC :4762 CREAM COLUMN :4762 CREAM LOCK :9201 POLISHED CHROME KEYS :SK SPEC 1-PLUG B72		
9	1	X3D000247 STEELCASE SCREEN-CORE MOUNTED,STRAIGHT, 24X19 1/4 INSIDE :F003 FIG OUTSIDE :F003 FIG TOP-CAP :6681 GROTTO V4		
10	1	X3F000720 STEELCASE SCREEN-CORE MOUNTED,CORNER,RH, 72X19 1/4 INSIDE :F003 FIG OUTSIDE :F003 FIG TOP-CAP :6681 GROTTO V4		

ACCEPTED BY _____ TITLE _____ DATE _____

Barclay Dean Interiors
1917 120th Ave. N.E. • P.O. Box 3827
Bellevue, WA 98005
(425) 451-8940 • FAX (425) 454-1705

Quotation

Quote Number	Quote Date	Customer Order Number	Customer Number	Account Representative	Proj No.
8598	08/26/98		STEGSA	Christina Six	

Line	Quantity	Catalog Number/Description	Unit Price	Extended Amount
11	1	X3E000420 STEELCASE SCREEN-CORE MOUNTED,CORNER,LH, 42X19 1/4 INSIDE :F003 FIG OUTSIDE :F003 FIG TOP-CAP :6681 GROTTO V4		
12	1	X4IS00001 STEELCASE BASE POWER IN-SINGLE UTILITY TRUNK		
13	2	X4ZE15001 STEELCASE END CAP-SINGLE UTILITY TRUNK TRIM :4762 CREAM		
14	1	X4ZW00242 STEELCASE UTILITY TRUNK-SINGLE,POWERWAY, 24W TRIM :4762 CREAM		
15	1	X4ZW00488 STEELCASE UTILITY TRUNK-SINGLE,POWERWAY, 48W TRIM :4762 CREAM		
16	1	X4ZW00726 STEELCASE UTILITY TRUNK-SINGLE,POWERWAY, 72W TRIM :4762 CREAM		

ACCEPTED BY _____ TITLE _____ DATE _____

Quotation

Barclay Dean Interiors
1917 120th Ave. N.E. • P.O. Box 3827
Bellevue, WA 98005
(425) 451-8940 • FAX (425) 454-1705

Quote Number	Quote Date	Customer Order Number	Customer Number	Account Representative	Proj No.
8599	08/26/98		STEGSA	Christina Six	

QUOTE TO: Deb Heitmeir
Steelcase Inc c/o Barclay Dean
GSA Select Acct Svcs
CH-2W-SS(GSA), 901 44th St SE
Kentwood, MI 49508

P: 1.206.246.4919

SHIP TO: Deb Heitmeir
Steelcase Inc c/o Barclay Dean
GSA Select Acct Svcs
CH-2W-SS(GSA), 901 44th St SE
Kentwood, MI 49508

P: 1.206.246.4919

Terms Net 30 Days

Line	Quantity	Catalog Number/Description	Unit Price	Extended Amount
		********** * WS8 * **********		
1	2	E90153 STEELCASE RECEPTACLE-NON CONDITIONABLE, DUPLEX,LINE 1,CTN/6 PLASTIC :6655 WARM WHITE		
2	2	E90160 STEELCASE RECEPTACLE-NON CONDITIONABLE, DUPLEX,LINE 2,CTN/6 PLASTIC :6655 WARM WHITE		
3	2	E90177 STEELCASE RECEPTACLE-NON CONDITIONABLE, DUPLEX,LINE 3,CTN/6 PLASTIC :6655 WARM WHITE		
4	2	LSM36K STEELCASE LIGHT-SHELF,ELEK BALLAST,25 WATT,LAMP,9' CORD,37W OPTIONS * * OPTIONS * * LGT OPTS *OPT:SHELF LIGHT COLOR OPTI PNTLIGHT NON-STD PAINTED HOUSING BASIC BASIC (PRIMARY FINISH) STD PNT STANDARD PAINT 4762 CREAM		
5	2	LSM48K STEELCASE LIGHT-SHELF,ELEK BALLAST,32 WATT,LAMP,9' CORD,49W OPTIONS * * OPTIONS * *		

ACCEPTED BY _____ TITLE _____ DATE _____

Barclay Dean Interiors
1917 120th Ave. N.E. • P.O. Box 3827
Bellevue, WA 98005
(425) 451-8940 • FAX (425) 454-1705

Quotation

Quote Number	Quote Date	Customer Order Number	Customer Number	Account Representative	Proj No.
8599	08/26/98		STEGSA	Christina Six	

Line	Quantity	Catalog Number/Description	Unit Price	Extended Amount
		LGT OPTS *OPT:SHELF LIGHT COLOR OPTI PNTLIGHT NON-STD PAINTED HOUSING BASIC BASIC (PRIMARY FINISH) STD PNT STANDARD PAINT 4762 CREAM		
6	1	X1AL24605 STEELCASE CORE UNIT-STRAIGHT,INSIDE/END SUPPORTS,24X60 BASIC :4762 CREAM PORT :6681 GROTTO V4 TOP-SURF:2722 CREAM		
7	1	X1AR24603 STEELCASE CORE UNIT-STRAIGHT,END/INSIDE SUPPORTS,24X60 BASIC :4762 CREAM PORT :6681 GROTTO V4 TOP-SURF:2722 CREAM		
8	1	X1BL24486 STEELCASE CORE UNIT-CORNER,INSIDE/END SUPPORTS,24X24X48X48 BASIC :4762 CREAM PORT :6681 GROTTO V4 TOP-SURF:2722 CREAM		
9	1	X1BR24484 STEELCASE CORE UNIT-CORNER,END/INSIDE SUPPORTS,24X24X48X48 BASIC :4762 CREAM PORT :6681 GROTTO V4 TOP-SURF:2722 CREAM		
10	2	X2CN2400A2 STEELCASE PEDESTAL-2 BOX/1 FILE DWR, WATERFALL PULL,LOCK,24D BASIC :4762 CREAM LOCK :9201 POLISHED CHROME PULL :9210 COPPER KEYS :SK SPEC 2-PLUG BBF		

ACCEPTED BY _____ TITLE _____ DATE _____

Quotation

Barclay Dean Interiors
1917 120th Ave. N.E. • P.O. Box 3827
Bellevue, WA 98005
(425) 451-8940 • FAX (425) 454-1705

Quote Number	Quote Date	Customer Order Number	Customer Number	Account Representative	Proj No.
8599	08/26/98		STEGSA	Christina Six	

Line	Quantity	Catalog Number/Description	Unit Price	Extended Amount
11	2	X2FC00482 STEELCASE CABINET-OVERHEAD,SINGLE DOOR, LOCK,COLUMN SUPPORTS,48W BASIC :4762 CREAM COLUMN :4762 CREAM LOCK :9201 POLISHED CHROME KEYS :SK SPEC 2-PLUG B48		
12	2	X2FC00602 STEELCASE CABINET-OVERHEAD,DOUBLE DOOR, LOCK,COLUMN SUPPORTS,60W BASIC :4762 CREAM COLUMN :4762 CREAM LOCK :9201 POLISHED CHROME KEYS :SK SPEC 2-PLUG B60		
13	2	X2G20030A4 STEELCASE FILE-LATERAL,2 DWR,WATERFALL PULL,19X30X27 BASIC :4762 CREAM LOCK :9201 POLISHED CHROME PULL :9210 COPPER KEYS :SK SPEC 2-PLUG LF/30		
14	2	X3D000601 STEELCASE SCREEN-CORE MOUNTED,STRAIGHT, 60X19 1/4 INSIDE :F003 FIG OUTSIDE :F003 FIG TOP-CAP :6681 GROTTO V4		
15	1	X3E000482 STEELCASE SCREEN-CORE MOUNTED,CORNER,LH, 48X19 1/4 INSIDE :F003 FIG OUTSIDE :F003 FIG TOP-CAP :6681 GROTTO V4		

ACCEPTED BY _____ TITLE _____ DATE _____

Barclay Dean Interiors
1917 120th Ave. N.E. • P.O. Box 3827
Bellevue, WA 98005
(425) 451-8940 • FAX (425) 454-1705

Quotation

Quote Number	Quote Date	Customer Order Number	Customer Number	Account Representative	Proj No.
8599	08/26/98		STEGSA	Christina Six	

Line	Quantity	Catalog Number/Description	Unit Price	Extended Amount
16	1	X3F000483 STEELCASE SCREEN-CORE MOUNTED,CORNER,RH, 48X19 1/4 INSIDE :F003 FIG OUTSIDE :F003 FIG TOP-CAP :6681 GROTTO V4		
17	1	X4IS00001 STEELCASE BASE POWER IN-SINGLE UTILITY TRUNK		
18	2	X4ZE15001 STEELCASE END CAP-SINGLE UTILITY TRUNK TRIM :4762 CREAM		
19	4	X4ZW00488 STEELCASE UTILITY TRUNK-SINGLE,POWERWAY, 48W TRIM :4762 CREAM		
20	2	X4ZW00602 STEELCASE UTILITY TRUNK-SINGLE,POWERWAY, 60W TRIM :4762 CREAM		

ACCEPTED BY _____ TITLE _____ DATE _____

Barclay Dean Interiors
1917 120th Ave. N.E. • P.O. Box 3827
Bellevue, WA 98005
(425) 451-8940 • FAX (425) 454-1705

Quotation

Quote Number	Quote Date	Customer Order Number	Customer Number	Account Representative	Proj No.
8600	08/26/98		STEGSA	Christina Six	

QUOTE TO: Deb Heitmeir
Steelcase Inc c/o Barclay Dean
GSA Select Acct Svcs
CH-2W-SS(GSA), 901 44th St SE
Kentwood, MI 49508

P: 1.206.246.4919

SHIP TO: Deb Heitmeir
Steelcase Inc c/o Barclay Dean
GSA Select Acct Svcs
CH-2W-SS(GSA), 901 44th St SE
Kentwood, MI 49508

P: 1.206.246.4919

Terms Net 30 Days

Line	Quantity	Catalog Number/Description	Unit Price	Extended Amount
		********** * WS9 * **********		
1	1	E90160 STEELCASE RECEPTACLE-NON CONDITIONABLE, DUPLEX,LINE 2,CTN/6 PLASTIC :6655 WARM WHITE		
2	1	E90177 STEELCASE RECEPTACLE-NON CONDITIONABLE, DUPLEX,LINE 3,CTN/6 PLASTIC :6655 WARM WHITE		
3	1	X1AE30724 STEELCASE CORE UNIT-STRAIGHT,END/END SUPPORTS,30X72 BASIC :4762 CREAM PORT :6681 GROTTO V4 TOP-SURF:2722 CREAM		
4	2	X4ZE15001 STEELCASE END CAP-SINGLE UTILITY TRUNK TRIM :4762 CREAM		
5	1	X4ZW00726 STEELCASE UTILITY TRUNK-SINGLE,POWERWAY, 72W TRIM :4762 CREAM		

ACCEPTED BY _____ TITLE _____ DATE _____

Quotation

Barclay Dean Interiors
1917 120th Ave. N.E. • P.O. Box 3827
Bellevue, WA 98005
(425) 451-8940 • FAX (425) 454-1705

Quote Number	Quote Date	Customer Order Number	Customer Number	Account Representative	Proj No.
8579	08/26/98		STEGSA	Christina Six	

QUOTE TO: Deb Heitmeir
Steelcase Inc c/o Barclay Dean
GSA Select Acct Svcs
CH-2W-SS(GSA), 901 44th St SE
Kentwood, MI 49508

P: 1.206.246.4919

SHIP TO: Deb Heitmeir
Steelcase Inc c/o Barclay Dean
GSA Select Acct Svcs
CH-2W-SS(GSA), 901 44th St SE
Kentwood, MI 49508

P: 1.206.246.4919

Terms Net 30 Days

Line	Quantity	Catalog Number/Description	Unit Price	Extended Amount
		**********		
		* WS10A *		
		**********		
1	1	E90160 STEELCASE RECEPTACLE-NON CONDITIONABLE, DUPLEX,LINE 2,CTN/6 PLASTIC :6655 WARM WHITE		
2	1	X1AE30487 STEELCASE CORE UNIT-STRAIGHT,END/END SUPPORTS,30X48 BASIC :4762 CREAM PORT :6681 GROTTO V4 TOP-SURF:2722 CREAM		
3	2	X4ZE15001 STEELCASE END CAP-SINGLE UTILITY TRUNK TRIM :4762 CREAM		
4	1	X4ZW00488 STEELCASE UTILITY TRUNK-SINGLE,POWERWAY, 48W TRIM :4762 CREAM		

ACCEPTED BY _____ TITLE _____ DATE _____

Quotation

Barclay Dean Interiors
1917 120th Ave. N.E. • P.O. Box 3827
Bellevue, WA 98005
(425) 451-8940 • FAX (425) 454-1705

Quote Number	Quote Date	Customer Order Number	Customer Number	Account Representative	Proj No.
8580	08/26/98		STEGSA	Christina Six	

QUOTE TO: Deb Heitmeir
Steelcase Inc c/o Barclay Dean
GSA Select Acct Svcs
CH-2W-SS(GSA), 901 44th St SE
Kentwood, MI 49508

P: 1.206.246.4919

SHIP TO: Deb Heitmeir
Steelcase Inc c/o Barclay Dean
GSA Select Acct Svcs
CH-2W-SS(GSA), 901 44th St SE
Kentwood, MI 49508

P: 1.206.246.4919

Terms Net 30 Days

Line	Quantity	Catalog Number/Description	Unit Price	Extended Amount
		**********	**********	
		* WS10B	*	
		**********	**********	
1	2	98216 STEELCASE PANEL-TACKABLE ACOUSTICAL, 60X65 HINGE :6608 DRIFTWOOD SURF-1 :F003 FIG SURF-2 :F003 FIG TRIM :4762 CREAM		
2	2	98753 STEELCASE BRACKET-STABILIZER,PANEL,CTN/2		

ACCEPTED BY _____ TITLE _____ DATE _____

Quotation

Barclay Dean Interiors
1917 120th Ave. N.E. • P.O. Box 3827
Bellevue, WA 98005
(425) 451-8940 • FAX (425) 454-1705

Quote Number	Quote Date	Customer Order Number	Customer Number	Account Representative	Proj No.
8578	08/26/98		STEGSA	Christina Six	

QUOTE TO: Deb Heitmeir
Steelcase Inc c/o Barclay Dean
GSA Select Acct Svcs
CH-2W-SS(GSA), 901 44th St SE
Kentwood, MI 49508

P: 1.206.246.4919

SHIP TO: Deb Heitmeir
Steelcase Inc c/o Barclay Dean
GSA Select Acct Svcs
CH-2W-SS(GSA), 901 44th St SE
Kentwood, MI 49508

P: 1.206.246.4919

Terms Net 30 Days

Line	Quantity	Catalog Number/Description	Unit Price	Extended Amount
		********** * WS10 * **********		
1	1	E90160 STEELCASE RECEPTACLE-NON CONDITIONABLE, DUPLEX,LINE 2,CTN/6 PLASTIC :6655 WARM WHITE		
2	1	X1AE30487 STEELCASE CORE UNIT-STRAIGHT,END/END SUPPORTS,30X48 BASIC :4762 CREAM PORT :6681 GROTTO V4 TOP-SURF:2722 CREAM		
3	1	X3A000488 STEELCASE SCREEN-CORE MOUNTED,STRAIGHT, 48X11 3/4 INSIDE :F003 FIG OUTSIDE :F003 FIG TOP-CAP :6681 GROTTO V4		
4	2	X4ZE15001 STEELCASE END CAP-SINGLE UTILITY TRUNK TRIM :4762 CREAM		
5	1	X4ZW00488 STEELCASE UTILITY TRUNK-SINGLE,POWERWAY, 48W TRIM :4762 CREAM		

ACCEPTED BY _____ TITLE _____ DATE _____

Quotation

Barclay Dean Interiors
1917 120th Ave. N.E. • P.O. Box 3827
Bellevue, WA 98005
(425) 451-8940 • FAX (425) 454-1705

Quote Number	Quote Date	Customer Order Number	Customer Number	Account Representative	Proj No.
8581	08/20/98		STEGSA	Christina Six	

QUOTE TO: Deb Heitmeir
Steelcase Inc c/o Barclay Dean
GSA Select Acct Svcs
CH-2W-SS(GSA), 901 44th St SE
Kentwood, MI 49508

P: 1.206.246.4919

SHIP TO: Deb Heitmeir
Steelcase Inc c/o Barclay Dean
GSA Select Acct Svcs
CH-2W-SS(GSA), 901 44th St SE
Kentwood, MI 49508

P: 1.206.246.4919

Terms Net 30 Days

Line	Quantity	Catalog Number/Description	Unit Price	Extended Amount
		********** * WS11L * **********		
1	1	E90153 STEELCASE RECEPTACLE-NON CONDITIONABLE, DUPLEX,LINE 1,CTN/6 PLASTIC :6655 WARM WHITE		
2	1	E90160 STEELCASE RECEPTACLE-NON CONDITIONABLE, DUPLEX,LINE 2,CTN/6 PLASTIC :6655 WARM WHITE		
3	1	E90177 STEELCASE RECEPTACLE-NON CONDITIONABLE, DUPLEX,LINE 3,CTN/6 PLASTIC :6655 WARM WHITE		
4	2	LSM36K STEELCASE LIGHT-SHELF,ELEK BALLAST,25 WATT,LAMP,9' CORD,37W OPTIONS * * OPTIONS * * LGT OPTS *OPT:SHELF LIGHT COLOR OPTI PNTLIGHT NON-STD PAINTED HOUSING BASIC BASIC (PRIMARY FINISH) STD PNT STANDARD PAINT 4762 CREAM		
5	1	X1AL24485 STEELCASE CORE UNIT-STRAIGHT,INSIDE/END SUPPORTS,24X48 BASIC :4762 CREAM		

ACCEPTED BY _____ TITLE _____ DATE _____

Quotation

Barclay Dean Interiors
1917 120th Ave. N.E. • P.O. Box 3827
Bellevue, WA 98005
(425) 451-8940 • FAX (425) 454-1705

Quote Number	Quote Date	Customer Order Number	Customer Number	Account Representative	Proj No.
8581	08/20/98		STEGSA	Christina Six	

Line	Quantity	Catalog Number/Description	Unit Price	Extended Amount
		PORT :6681 GROTTO V4 TOP-SURF:2722 CREAM		
6	1	X1DR24785 STEELCASE TABLE-JETTY,CONF/INSIDE SUPPORTS,LH,30X24X78X48 BASIC :4762 CREAM DRUM :4762 CREAM PORT :6681 GROTTO V4 TOP-SURF:2722 CREAM		
7	1	X2CN2400A2 STEELCASE PEDESTAL-2 BOX/1 FILE DWR, WATERFALL PULL,LOCK,24D BASIC :4762 CREAM LOCK :9201 POLISHED CHROME PULL :9210 COPPER KEYS :SK SPEC 1-PLUG BBF		
8	1	X2CN2400AM STEELCASE PEDESTAL-MOBILE,2 BOX/1 FILE DWR,LK,WATERFALL PULL,24X15 BASIC :4762 CREAM LOCK :9201 POLISHED CHROME PULL :9210 COPPER KEYS :SK SPEC 1-PLUG MP		
9	2	X2FC00482 STEELCASE CABINET-OVERHEAD,SINGLE DOOR, LOCK,COLUMN SUPPORTS,48W BASIC :4762 CREAM COLUMN :4762 CREAM LOCK :9201 POLISHED CHROME KEYS :SK SPEC 2-PLUG B48		
10	1	X3D000481 STEELCASE SCREEN-CORE MOUNTED,STRAIGHT, 48X19 1/4 INSIDE :F003 FIG OUTSIDE :F003 FIG		

ACCEPTED BY _____ TITLE _____ DATE _____

Quotation

Barclay Dean Interiors
1917 120th Ave. N.E. • P.O. Box 3827
Bellevue, WA 98005
(425) 451-8940 • FAX (425) 454-1705

Quote Number	Quote Date	Customer Order Number	Customer Number	Account Representative	Proj No.
8581	08/20/98		STEGSA	Christina Six	

Line	Quantity	Catalog Number/Description	Unit Price	Extended Amount
		TOP-CAP :6681 GROTTO V4		
11	1	X3D000481 STEELCASE SCREEN-CORE MOUNTED,STRAIGHT, 48X19 1/4 INSIDE :F003 FIG OUTSIDE :F003 FIG TOP-CAP :6681 GROTTO V4		
12	1	X4IS00001 STEELCASE BASE POWER IN-SINGLE UTILITY TRUNK		
13	2	X4ZE15001 STEELCASE END CAP-SINGLE UTILITY TRUNK TRIM :4762 CREAM		
14	2	X4ZW00488 STEELCASE UTILITY TRUNK-SINGLE,POWERWAY, 48W TRIM :4762 CREAM		

ACCEPTED BY _____ TITLE _____ DATE _____

Quotation

Barclay Dean Interiors
1917 120th Ave. N.E. • P.O. Box 3827
Bellevue, WA 98005
(425) 451-8940 • FAX (425) 454-1705

Quote Number	Quote Date	Customer Order Number	Customer Number	Account Representative	Proj No.
8582	08/26/98		STEGSA	Christina Six	

QUOTE TO: Deb Heitmeir
Steelcase Inc c/o Barclay Dean
GSA Select Acct Svcs
CH-2W-SS(GSA), 901 44th St SE
Kentwood, MI 49508

P: 1.206.246.4919

SHIP TO: Deb Heitmeir
Steelcase Inc c/o Barclay Dean
GSA Select Acct Svcs
CH-2W-SS(GSA), 901 44th St SE
Kentwood, MI 49508

P: 1.206.246.4919

Terms Net 30 Days

Line	Quantity	Catalog Number/Description	Unit Price	Extended Amount
		********** * WS11R * **********		
1	1	E90153 STEELCASE RECEPTACLE-NON CONDITIONABLE, DUPLEX,LINE 1,CTN/6 PLASTIC :6655 WARM WHITE		
2	1	E90160 STEELCASE RECEPTACLE-NON CONDITIONABLE, DUPLEX,LINE 2,CTN/6 PLASTIC :6655 WARM WHITE		
3	1	E90177 STEELCASE RECEPTACLE-NON CONDITIONABLE, DUPLEX,LINE 3,CTN/6 PLASTIC :6655 WARM WHITE		
4	2	LSM36K STEELCASE LIGHT-SHELF,ELEK BALLAST,25 WATT,LAMP,9' CORD,37W OPTIONS * * OPTIONS * * LGT OPTS *OPT:SHELF LIGHT COLOR OPTI PNTLIGHT NON-STD PAINTED HOUSING BASIC BASIC (PRIMARY FINISH) STD PNT STANDARD PAINT 4762 CREAM		
5	1	X1AR24483 STEELCASE CORE UNIT-STRAIGHT,END/INSIDE SUPPORTS,24X48 BASIC :4762 CREAM		

ACCEPTED BY _____ TITLE _____ DATE _____

Barclay Dean Interiors
1917 120th Ave. N.E. • P.O. Box 3827
Bellevue, WA 98005
(425) 451-8940 • FAX (425) 454-1705

Quotation

Quote Number	Quote Date	Customer Order Number	Customer Number	Account Representative	Proj No.
8582	08/26/98		STEGSA	Christina Six	

Line	Quantity	Catalog Number/Description	Unit Price	Extended Amount
		PORT :6681 GROTTO V4 TOP-SURF:2722 CREAM		
6	1	X1DL24787 STEELCASE TABLE-JETTY,INSIDE/CONF SUPPORTS,RH,24X30X48X78 BASIC :4762 CREAM DRUM :4762 CREAM PORT :6681 GROTTO V4 TOP-SURF:2722 CREAM		
7	1	X2CN2400A2 STEELCASE PEDESTAL-2 BOX/1 FILE DWR, WATERFALL PULL,LOCK,24D BASIC :4762 CREAM LOCK :9201 POLISHED CHROME PULL :9210 COPPER KEYS :SK SPEC 1-PLUG BBF		
8	1	X2CN2400AM STEELCASE PEDESTAL-MOBILE,2 BOX/1 FILE DWR,LK,WATERFALL PULL,24X15 BASIC :4762 CREAM LOCK :9201 POLISHED CHROME PULL :9210 COPPER KEYS :SK SPEC 1-PLUG MP		
9	2	X2FC00482 STEELCASE CABINET-OVERHEAD,SINGLE DOOR, LOCK,COLUMN SUPPORTS,48W BASIC :4762 CREAM COLUMN :4762 CREAM LOCK :9201 POLISHED CHROME KEYS :SK SPEC 2-PLUG B48		
10	1	X3D000481 STEELCASE SCREEN-CORE MOUNTED,STRAIGHT, 48X19 1/4 INSIDE :F003 FIG OUTSIDE :P003 FIG		

ACCEPTED BY _____ TITLE _____ DATE _____

Barclay Dean Interiors
1917 120th Ave. N.E. • P.O. Box 3827
Bellevue, WA 98005
(425) 451-8940 • FAX (425) 454-1705

Quotation

Quote Number	Quote Date	Customer Order Number	Customer Number	Account Representative	Proj No.
8582	08/26/98		STEGSA	Christina Six	

Line	Quantity	Catalog Number/Description	Unit Price	Extended Amount
		TOP-CAP :6681 GROTTO V4		
11	1	X3D000481 STEELCASE SCREEN-CORE MOUNTED,STRAIGHT, 48X19 1/4 INSIDE :F003 FIG OUTSIDE :P003 FIG TOP-CAP :6681 GROTTO V4		
12	1	X4IS00001 STEELCASE BASE POWER IN-SINGLE UTILITY TRUNK		
13	2	X4ZE15001 STEELCASE END CAP-SINGLE UTILITY TRUNK TRIM :4762 CREAM		
14	2	X4ZW00488 STEELCASE UTILITY TRUNK-SINGLE,POWERWAY, 48W TRIM :4762 CREAM		

ACCEPTED BY _____ TITLE _____ DATE _____

Quotation

Barclay Dean Interiors
1917 120th Ave. N.E. • P.O. Box 3827
Bellevue, WA 98005
(425) 451-8940 • FAX (425) 454-1705

Quote Number	Quote Date	Customer Order Number	Customer Number	Account Representative	Proj No.
8583	08/26/98		STEGSA	Christina Six	

QUOTE TO: Deb Heitmeir
Steelcase Inc c/o Barclay Dean
GSA Select Acct Svcs
CH-2W-SS(GSA), 901 44th St SE
Kentwood, MI 49508

P: 1.206.246.4919

SHIP TO: Deb Heitmeir
Steelcase Inc c/o Barclay Dean
GSA Select Acct Svcs
CH-2W-SS(GSA), 901 44th St SE
Kentwood, MI 49508

P: 1.206.246.4919

Terms Net 30 Days

Line	Quantity	Catalog Number/Description	Unit Price	Extended Amount
		********** * WS12 **********		
1	1	E90153 STEELCASE RECEPTACLE-NON CONDITIONABLE, DUPLEX,LINE 1,CTN/6 PLASTIC :6655 WARM WHITE		
2	1	E90160 STEELCASE RECEPTACLE-NON CONDITIONABLE, DUPLEX,LINE 2,CTN/6 PLASTIC :6655 WARM WHITE		
3	1	E90177 STEELCASE RECEPTACLE-NON CONDITIONABLE, DUPLEX,LINE 3,CTN/6 PLASTIC :6655 WARM WHITE		
4	1	HCC48S72S STEELCASE COUNTERTOP-CORNER,STRAIGHT/ STRAIGHT ENDS,15X48X72 BASIC :4762 CREAM TOP-SURF:2722 CREAM		
5	1	HCC48S72S STEELCASE COUNTERTOP-CORNER,STRAIGHT/ STRAIGHT ENDS,15X48X72 BASIC :4762 CREAM TOP-SURF:2722 CREAM		

ACCEPTED BY _____ TITLE _____ DATE _____

Quotation

Barclay Dean Interiors
1917 120th Ave. N.E. • P.O. Box 3827
Bellevue, WA 98005
(425) 451-8940 • FAX (425) 454-1705

Quote Number	Quote Date	Customer Order Number	Customer Number	Account Representative	Proj No.
8583	08/26/98		STEGSA	Christina Six	

Line	Quantity	Catalog Number/Description	Unit Price	Extended Amount
6	1	HSC60SS STEELCASE COUNTERTOP-STRAIGHT,STRAIGHT/ STRAIGHT ENDS,15X60 BASIC :4762 CREAM TOP-SURF:2722 CREAM		
7	1	X1AR24603 STEELCASE CORE UNIT-STRAIGHT,END/INSIDE SUPPORTS,24X60 BASIC :4762 CREAM PORT :6681 GROTTO V4 TOP-SURF:2722 CREAM		
8	1	X1MI24725 STEELCASE CORE UNIT-CORNER,EXTENDED,INS/ INS SUPPORTS,LH,24X24X72X48 BASIC :4762 CREAM PORT :6681 GROTTO V4 TOP-SURF:2722 CREAM		
9	1	X1NL24725 STEELCASE CORE UNIT-CORNER,EXTENDED,INS/ END SUPPORTS,RH,24X24X48X72 BASIC :4762 CREAM PORT :6681 GROTTO V4 TOP-SURF:2722 CREAM		
10	1	X2CN2400A2 STEELCASE PEDESTAL-2 BOX/1 FILE DWR, WATERFALL PULL,LOCK,24D BASIC :4762 CREAM LOCK :9201 POLISHED CHROME PULL :9210 COPPER KEYS :SK SPEC 1-PLUG BBF		
11	2	X2G20030A4 STEELCASE FILE-LATERAL,2 DWR,WATERFALL PULL,19X30X27 BASIC :4762 CREAM LOCK :9201 POLISHED CHROME PULL :9210 COPPER KEYS :SK SPEC		

ACCEPTED BY _____ TITLE _____ DATE _____

Barclay Dean Interiors
1917 120th Ave. N.E. • P.O. Box 3827
Bellevue, WA 98005
(425) 451-8940 • FAX (425) 454-1705

Quotation

Quote Number	Quote Date	Customer Order Number	Customer Number	Account Representative	Proj No.
8583	08/26/98		STEGSA	Christina Six	

Line	Quantity	Catalog Number/Description	Unit Price	Extended Amount
		2-PLUG LF/30		
12	1	X3A000608 STEELCASE SCREEN-CORE MOUNTED,STRAIGHT, 60X11 3/4 INSIDE :F003 FIG OUTSIDE :F003 FIG TOP-CAP :6681 GROTTO V4		
13	1	X3B000489 STEELCASE SCREEN-CORE MOUNTED,CORNER,LH, 48X11 3/4 INSIDE :F003 FIG OUTSIDE :F003 FIG TOP-CAP :6681 GROTTO V4		
14	1	X3B000726 STEELCASE SCREEN-CORE MOUNTED,CORNER,LH, 72X11 3/4 INSIDE :F003 FIG OUTSIDE :F003 FIG TOP-CAP :6681 GROTTO V4		
15	1	X3C000480 STEELCASE SCREEN-CORE MOUNTED,CORNER,RH, 48X11 3/4 INSIDE :F003 FIG OUTSIDE :F003 FIG TOP-CAP :6681 GROTTO V4		
16	1	X3C000727 STEELCASE SCREEN-CORE MOUNTED,CORNER,RH, 72X11 3/4 INSIDE :F003 FIG OUTSIDE :F003 FIG TOP-CAP :6681 GROTTO V4		
17	1	X4IS00001 STEELCASE BASE POWER IN-SINGLE UTILITY TRUNK		

ACCEPTED BY _____ TITLE _____ DATE _____

Quotation

Barclay Dean Interiors
1917 120th Ave. N.E. • P.O. Box 3827
Bellevue, WA 98005
(425) 451-8940 • FAX (425) 454-1705

Quote Number	Quote Date	Customer Order Number	Customer Number	Account Representative	Proj No.
8583	08/26/98		STEGSA	Christina Six	

Line	Quantity	Catalog Number/Description	Unit Price	Extended Amount
18	1	X4ZE15001 STEELCASE END CAP-SINGLE UTILITY TRUNK TRIM :4762 CREAM		
19	2	X4ZW00488 STEELCASE UTILITY TRUNK-SINGLE,POWERWAY, 48W TRIM :4762 CREAM		
20	1	X4ZW00602 STEELCASE UTILITY TRUNK-SINGLE,POWERWAY, 60W TRIM :4762 CREAM		
21	2	X4ZW00726 STEELCASE UTILITY TRUNK-SINGLE,POWERWAY, 72W TRIM :4762 CREAM		

ACCEPTED BY _____ TITLE _____ DATE _____

Quotation

Barclay Dean Interiors
1917 120th Ave. N.E. • P.O. Box 3827
Bellevue, WA 98005
(425) 451-8940 • FAX (425) 454-1705

Quote Number	Quote Date	Customer Order Number	Customer Number	Account Representative	Proj No.
8601	08/26/98		STEGSA	Christina Six	

QUOTE TO: Deb Heitmeir
Steelcase Inc c/o Barclay Dean
GSA Select Acct Svcs
CH-2W-SS(GSA), 901 44th St SE
Kentwood, MI 49508

P: 1.206.246.4919

SHIP TO: Deb Heitmeir
Steelcase Inc c/o Barclay Dean
GSA Select Acct Svcs
CH-2W-SS(GSA), 901 44th St SE
Kentwood, MI 49508

P: 1.206.246.4919

Terms Net 30 Days

Line	Quantity	Catalog Number/Description	Unit Price	Extended Amount
		********** * WS13 * **********		
1	1	E90177 STEELCASE RECEPTACLE-NON CONDITIONABLE, DUPLEX,LINE 3,CTN/6 PLASTIC :6655 WARM WHITE		
2	1	X1AE30669 STEELCASE CORE UNIT-STRAIGHT,END/END SUPPORTS,30X66 BASIC :4762 CREAM PORT :6681 GROTTO V4 TOP-SURF:2722 CREAM		
3	1	X4IS00001 STEELCASE BASE POWER IN-SINGLE UTILITY TRUNK		
4	2	X4ZE15001 STEELCASE END CAP-SINGLE UTILITY TRUNK TRIM :4762 CREAM		
5	1	X4ZW00665 STEELCASE UTILITY TRUNK-SINGLE,POWERWAY, 66W TRIM :4762 CREAM		

-- END OF SECTION --

This page intentionally blank

SECTION 12710

THEATER CHAIRS

1 GENERAL

1.1 REFERENCES

The publications listed below form a part of this specification to the extent referenced. The publications are referred to in the text by basic designation only.

AMERICAN SOCIETY FOR TESTING AND MATERIALS (ASTM)

ASTM D 3597	(1995a) Woven Upholstery Fabrics-Plain, Tufted, or Flocked
ASTM D 3690	(1995a) Performance Specification for Vinyl-Coated and Urethane-Coated Upholstery Fabrics--Indoor

HARDWOOD PLYWOOD VENEER ASSOCIATION (HPVA)

HPVA HP-1	(1994) Interim Voluntary Standard for Hardwood and Decorative Plywood

NATIONAL ELECTRICAL MANUFACTURERS ASSOCIATION (NEMA)

NEMA LD 3	(1995) High-Pressure Decorative Laminates

1.2 SUBMITTALS

Government approval is required for submittals with a "GA" designation; submittals having an "FIO" designation are for information only. The following shall be submitted in accordance with Section 01330 SUBMITTAL PROCEDURES:

SD-01 Data

Theater Chairs; FIO.

Manufacturer's descriptive data, catalog cuts, and installation instructions.

SD-04 Drawings

Theater Chairs; GA.

Drawings indicating metal thickness, fastenings, details of hinge mechanism, seat and back dimensions, proposed finish, and including seating plans showing row spacing, row lengths, the varying lateral spacing at backs and seats, back pitch, and chair widths for the various section lengths, floor pitch, and riser height, where applicable.

SD-14 Samples

Theater Chairs; GA.

Samples of upholstery, plywood, laminate, paint, and plastic finish materials and one complete chair. Fabric samples shall be of sufficient size to show color range, pattern, and finish. Chair sample may be incorporated into the installation, provided it is identified and the location noted.

1.3 DELIVERY AND STORAGE

Theater chairs shall be delivered to the site in unopened containers clearly labeled with the manufacturer's name and container contents. Materials shall be stored in a safe, dry, and clean location. Handling of items shall be in a manner that will protect the materials from damage.

1.4 WARRANTY

Manufacturer's standard performance guarantees or warranties that extend beyond a one year period shall be provided.

2 PRODUCTS

2.1 MATERIALS

2.1.1 Woven Fabric Upholstery

Woven fabric shall conform to ASTM D 3597, except that it shall be 60 percent wool and 40 percent nylon, 12 ounces per linear yard, acrylic backing. Fabric shall be treated to resist staining and soiling. Color and pattern shall be as indicated.

2.1.2 Polyurethane Foam

Polyurethane foam shall be high density, fire retardant, nonhardening and nonoxidizing and shall have a high resistance to alkalies, oils, grease, soaps, abrasions, moisture, mildew, and tearing.

2.1.3 Plywood

Plywood shall conform to HPVA HP-1. Face veneers for exposed surfaces shall be of Grade A birch. Unexposed veneers shall be sound grade hardwood or Grade A fir. All face veneers shall be not more than 1/16 inch in thickness, of clear stock, and free from imperfections.

2.1.4 Laminated Plastic Sheets

Laminated plastic sheets shall conform to NEMA LD 3, Type 1, Grade GP 50, nominal thickness 0.050 inch.

2.1.5 Molded Plastic

Molded plastic shall be high density with a minimum tensile strength of 3300 psi. Material shall be capable of withstanding outdoor temperatures ranging from plus 175 degrees to minus 50 degrees F. Pigments used shall be of such quality to eliminate painting plastic parts. Component surfaces shall have a textured finish.

2.2 CHAIRS

Chair components and assembly shall be free from objectionable projections or irregularities. Corners and edges shall be smooth and rounded. Bolts, nuts, and other fastenings shall be capped. Steel shall be well-formed to shape and size required. Jointing of members shall be welded, riveted, or interlocked. Exposed welds shall be ground and dressed smooth. Casting shall be fine textured, sound, and free of pits, blow holes, and fins. Lines shall be true, accurate, and true-to-pattern with excess metal or imperfections removed. Fastening shall be concealed where possible.

2.2.1 Chair Backs

Back assembly shall consist of a steel, plastic or plywood rear panel with an upholstered steel or plywood front panel. Back assembly length shall be between 20 and 27-1/2 inches for a total height of 29 to 38 inches above the floor measured parallel to the back. Rear panel shall completely conceal and protect the rest of the seat assembly when in the raised position. Back shall be fixed type.

2.2.1.1 Steel Panels

Steel panels shall be fabricated from not less than 20 gauge, compound-curved, die-formed steel. The perimeter of the front upholstered panel shall be hemmed.

2.2.1.2 Plastic Panels

Plastic rear panels shall be one-piece injection molded plastic or high pressure laminated plastic adhered to hardboard or plywood. Color and texture of plastic panels shall be as selected.

2.2.1.3 Wood Front Panels

Plywood upholstered front panels shall be fabricated from cross-banded plywood of not less than 3 ply, 3/8 inch thick hardwood veneers.

2.2.1.4 Foam Padding

Polyurethane foam shall be high density, fire retardant and shall be not less than approximately 2 inches in thickness and shall be securely attached to the steel or plywood panel and completely covered with the approved upholstery material.

2.2.2 Seats

Foundation for upholstered seats shall be formed of not less than 20 gauge steel or electronically glued hardwood plywood. The seat foundation shall be free from visible screws, bolts, open holes, and projections on the bottom, front, and sides. The upholstered seat unit shall be easily removable without removing the foundation unit; and the covering shall be fastened to the frame in a manner that will permit easy reupholstering.

2.2.2.1 Steel Seat Units

Upholstered steel seat unit shall be coil-spring type construction or nonsag spring-type construction. Springs shall be attached to a die-formed steel

framework. Coil-spring units shall contain no less than 16 coil springs. Springs shall be connected in both directions to control spring axial depression. Nonsag spring units shall contain at least five serpentine design springs suspended under tension; cross bracing, if required, shall be welded to frame so as not to interfere with spring action. Cushions shall be polyurethane foam cemented to burlap sheeting; shall have a minimum thickness of 1-3/4 inches throughout for coil-spring type construction, and 3 inches at front edge, 1-3/4 inches at rear edge, and 1 inch throughout the other portions for nonsag spring units. Panel side covers shall be made without welts. Top and front cover shall have size boxing of fabric upholstery material.

2.2.2.2 Plywood Seat Units

Upholstered plywood seat unit shall be minimum 3/4 inch thick, 7-ply, electronically-glued hardwood plywood with minimum of four 1/4-20 threaded inserts for attachment of seat hinges. Cushion material shall be high-density fire-retardant polyurethane foam, minimum 3-1/2 inches thick, cored for comfort. Outside of seat bottom shall be fully encapsulated in 1/4 inch slab polyurethane foam. Padding materials shall be fully glued to plywood panels with contact cement.

2.2.3 Hinges

Hinges shall be a counterweight mechanism using gravity to return to the upright position or of the full compensating type, completely enclosed, totally independent, free and easy in operation, and capable of compensating for circular installation, variation in installation conditions, and unevenness of floors. The hinges shall have oil-impregnated, self-lubricating, metal or brass alloy bearings that will not require further lubrication, or nylon bushings. Hinges shall have a spring tension adjustment mechanism to allow manual compensation for normal wear and fatigue.

2.2.4 Standards

2.2.4.1 Floor Standards

Floor standards shall be tublar steel, sheet steel, or cast iron. The standards shall be formed to fit the floor incline so that the standards will be vertical and the hinge point will be at a height that will maintain proper relation of seat to floor. The feet shall be formed to eliminate tripping hazards and shall have holes for bolt attachment to the floor.

2.2.4.2 Riser Standards

Riser standards shall meet the requirements for floor mounted standard, except the standard shall be formed to approach the riser face at an angle to allow maximum clearance. Riser attachment shall be made through a 1/4 inch steel plate welded to the standard or on an integrally cast foundation.

2.2.4.3 Cantilevered Standards

The assembly shall be of not less than 11 gauge seamless tube-steel construction, designed to support three seats by the use of continuous horizontal rail and stanchions with floor plates welded thereto. Horizontal rails shall be provided in the longest practicable lengths with welded

spliced ends centered on stanchions. Each length of horizontal rail shall be supported by not less than two stanchions. Stanchions shall be located at the center of every other seat, except at aisles where they shall be 12 inches in from aisle lines. Floor plates shall be formed to floor incline so stanchions will be vertical and hinge point at a height that will maintain proper relation of seat to floor.

2.2.4.4 Aisle and End Standards

Aisle or end standard panels shall be of the manufacturer's standard design and shall have decorator panels of laminated plastic. Middle standards shall be designed to match basic aisle or end standard configuration.

2.2.5 Armrests

Armrests shall be wood with laminated plastic.

2.2.6 Tablet Arm

Each chair shall be equipped with a fold-away tablet arm assembly. Tablet arm shall be fabricated of manufacturer's standard core material faced with plastic laminate. Color and pattern shall be as selected. All edges shall be rounded. When in a writing position, the arm shall lock firmly in place so that it cannot be accidentally disengaged. A spring actuated device shall automatically lock the folded tablet arm in position beside the seat.

2.3 FINISH

Wood and metal surfaces shall be given the manufacturer's standard finishes.

3 EXECUTION

3.1 SEATING SYSTEM

The system shall permit the standards to be installed on radial lines from a common center for which concentric circles are determined with each row of units utilizing common middle standards. Standards in each row shall be placed laterally so the aisle-end standards will be in alignment as indicated on seating layout drawing. The angle of inclination of backs shall be adjusted for variations in sightlines. Mechanical attachment of components shall be of sufficient flexibility so that when permanently assembled they will compensate for the changing dimensions laterally between standards caused by convergence toward the center. Seat and back attachments shall absorb inaccuracies in lateral spacing of standards at point of attachment caused by unevenness of floor. Varying lateral dimensions of backs and seats shall be in accordance with approved seating layout. Minimum width of seating unit shall be 20 inches and may be used only to complete a specific row dimension.

3.2 INSTALLATION

Installation of theater chairs shall be in accordance with the seating plans and approved installation instructions.

END OF SECTION

NOTE: This is an entirely new specification section, added by Amendment 0001.

SECTION 13080

SEISMIC PROTECTION FOR MECHANICAL, ELECTRICAL EQUIPMENT

1 GENERAL

1.1 REFERENCES

The publications listed below form a part of this specification to the extent referenced. The publications are referred to in the text by basic designation only.

AMERICAN SOCIETY FOR TESTING AND MATERIALS (ASTM)

ASTM A 36/A 36M	(1996) Carbon Structural Steel
ASTM A 53	(1996) Pipe, Steel, Black and Hot-Dipped, Zinc-Coated Welded, and Seamless
ASTM A 153	(1996) Zinc Coating (Hot-Dip) on Iron and Steel Hardware
ASTM A 307	(1994) Carbon Steel Bolts and Studs, 60,000 PSI Tensile Strength
ASTM A 500	(1993) Cold-Formed Welded and Seamless Carbon Steel Structural Tubing in Rounds and Shapes
ASTM A 563	(1994) Carbon and Alloy Steel Nuts
ASTM A 603	(1994) Zinc-Coated Steel Structural Wire Rope
ASTM A 653/A 653M	(1996) Steel Sheet, Zinc-Coated (Galvanized) or Zinc-Iron Alloy-Coated (Galvannealed) by the Hot-Dip Process
ASTM E 488	(1990) Strength of Anchors in Concrete and Masonry Elements
ASTM E 580	(1991) Application of Ceiling Suspension Systems for Acoustical Tile and Lay-In Panels in Areas Requiring Seismic Restraint

AMERICAN SOCIETY OF MECHANICAL ENGINEERS (ASME)

ASME B18.2.1	(1981; Supple 199O; R 1992) Square and Hex Bolts and Screws (Inch Series)
ASME B18.2.2	(1987; R 1993) Square and Hex Nuts (Inch Series)

INTERNATIONAL CONFERENCE OF BUILDING OFFICIALS (ICBO)

ICBO-01	(1997) Uniform Building Code (3 Vol.)

SHEET METAL & AIR CONDITIONING CONTRACTORS' NATIONAL ASSOCIATION (SMACNA)

SMACNA-12	(1991; Appx E, 1993) Seismic Restraint Manual Guidelines for Mechanical Systems

UNDERWRITERS LABORATORIES (UL)

UL 1570	(1995) Fluorescent Lighting Fixtures
UL 1571	(1991; Rev thru Mar 95) Incandescent Lighting Fixtures

1.2 SYSTEM DESCRIPTION

1.2.1 General

The requirements for seismic protection measures described in this section shall be applied to mechanical/electrical equipment and systems specified herein. Seismic protection requirements shall be in accordance with ICBO-01 using an importance factor of 1.0 and shall be provided in addition to any other requirements called for in other sections of these specifications. This facility shall be designed as being in seismic zone 3; no other zone values shall be used to establish bracing requirements. Lateral support against earthquake induced forces shall be accomplished by positive attachments without consideration of friction resulting from gravity loads.

1.2.2 Mechanical/Electrical Equipment

Mechanical/electrical equipment shall include the following items to the extent required on the drawings or in other sections of these specifications:

Boilers
Water Heaters
Steam, Water, and Gas Piping
Air Separator Tanks
Cable Trays
Water Chiller Units
Compression Tanks
Air Compressors
Control Panels
Air Handling Units
Pumps with Motors
Light Fixtures
Transformers
Switchboards (Floor Mounted)
Suspended Ceiling Assemblies
Ducts
Unit Heaters
Exhaust and Return Fans
Central Battery Emergency Lighting System

1.2.3 Mechanical/Electrical Systems

The following mechanical and electrical systems shall be installed as required on the drawings and other sections of these specifications and shall be seismically protected in accordance with this specification, and as indicated:

All Piping Inside the Building
Chilled Water Distribution Systems Outside of Buildings
All Water Supply Systems
Storm and Sanitary Sewer Systems
All Process Piping

1.2.4 Exclusion

Seismic protection of piping for fire protection systems shall be installed as specified in Sections 15330 WET PIPE SPRINKLER SYSTEM, FIRE PROTECTION.

1.2.5 Pipes and Ducts Requiring No Special Seismic Restraints

Seismic restraints may be omitted from the following installations:

a. Gas piping less than 1 inch inside diameter.

b. Piping in boiler and mechanical equipment rooms less than 1-1/4 inches inside diameter.

c. All other piping less than 1-1/2 inches inside diameter.

d. Electrical conduit less than 2-1/2 inches inside diameter.

e. Rectangular air handling ducts less than 6 square feet in cross sectional area.

f. Round air handling ducts less than 28 inches in diameter.

g. Piping suspended by individual hangers 12 inches or less in length from the top of pipe to the bottom of the supporting structural member where the hanger is attached, except as noted below.

h. Ducts suspended by hangers 12 inches or less in length from the top of the duct to the bottom of the supporting structural member, except as noted below.

In exemptions g. and h. all hangers shall meet the length requirements. If the length requirement is exceeded by one hanger in the run, the entire run shall be braced.

1.2.6 All Other Interior Piping, Conduit, and Ducts

Interior piping, conduit, and ducts not covered by paragraphs Exclusion or Pipes and Ducts Requiring No special Seismic Restraints shall be seismically protected in accordance with the provisions herein.

2 PRODUCTS

2.1 MATERIALS AND EQUIPMENT

Materials and equipment shall conform to the requirements specified below:

2.1.1 Bolts and Nuts

Squarehead and hexhead bolts, and heavy hexagon nuts, ASME B18.2.1, ASME B18.2.2, or ASTM A 307 for bolts and ASTM A 563 for nuts. Bolts and nuts used underground and/or exposed to weather shall be galvanized in accordance with ASTM A 153.

2.1.2 Sway Bracing

As indicated.

2.1.3 Flexible Couplings

Flexible couplings shall have same pressure and temperature ratings as adjoining pipe.

2.1.4 Lighting Fixture Supports

Fixture supports shall be malleable iron. Lighting fixtures and supports shall conform to UL 1570 or UL 1571 as applicable.

3 EXECUTION

3.1 BRACING AND COUPLING

Bracing and coupling shall conform to the arrangements shown. Provisions of this paragraph apply to all piping within a 5 foot line around outside of building unless buried in the ground. Piping grouped for support on trapeze-type hangers shall be braced at the same intervals as determined by the smallest diameter pipe of the group. No trapeze-type hanger shall be secured with less than two 1/2 inch bolts. Bracing rigidly attached to pipe flanges, or similar, shall not be used where it would interfere with thermal expansion of piping.

3.2 BUILDING DRIFT

Sway braces for a run shall not be attached to two dissimilar structural elements of a building that may respond differentially during an earthquake unless a flexible joint is provided. Joints capable of accommodating seismic displacements shall be provided where pipes pass through a building seismic or expansion joint, or where rigidly supported pipes connect to equipment with vibration isolators. For threaded piping, swing joints shall be provided. For piping with manufactured ball joints the seismic drift shall be 0.015 feet per foot of height above the base where the seismic separation occurs; this drift value shall be used in place of the expansion given in the manufacturer's selection table.

3.3 FLEXIBLE COUPLINGS OR JOINTS

3.3.1 Building Piping

Flexible couplings or joints in building piping shall be provided at bottom of all pipe risers larger than 3-1/2 inches in diameter. Flexible couplings or joints shall be braced laterally without interfering with the action of the flexible coupling or joint. Cast iron waste and vent piping need only comply with these provisions when caulked joints are used. Flexible bell and spigot pipe joints using rubber gaskets or no-hub fittings may be used at each branch adjacent to tees and elbows for underground waste piping inside of building to comply with these requirements.

3.3.2 Underground Piping

Underground piping and 4 inch or larger conduit, except heat distribution system, shall have flexible couplings installed where the piping enters the building. The couplings shall accommodate 1.0 inch of relative movement between the pipe and the building in any direction. Additional flexible couplings shall be provided where shown on the drawings.

3.4 PIPE SLEEVES

Pipe sleeves in interior non-fire rated walls shall be sized as indicated on the drawings to provide clearances that will permit differential movement of piping without the piping striking the pipe sleeve.

3.5 SPREADERS

Spreaders shall be provided between adjacent piping runs to prevent contact during seismic activity whenever pipe or insulated pipe surfaces are less than 4 inches apart. Spreaders shall be applied at same interval as sway braces at an equal distance between the sway braces. If rack type hangers are used where the pipes are restrained from contact by mounting to the rack, spreaders are not required for pipes mounted in the rack. Spreaders shall be applied to surface of bare pipe and over insulation on insulated pipes utilizing high-density inserts and pipe protection shields in accordance with the requirements of Section 15250 THERMAL INSULATION FOR MECHANICAL SYSTEMS.

3.6 ANCHOR BOLTS

3.6.1 Cast-In-Place

Floor or pad mounted equipment shall use cast-in-place anchor bolts, except as specified below. One nut shall be provided on each bolt. Anchor bolts shall conform to the following tabulation for the various equipment weights and specified seismic zone or the manufacturer's installation recommendations, whichever is the most stringent, unless otherwise shown on the drawings. Anchor bolts that exceed the normal depth of equipment foundation piers or pads shall either extend into concrete floor or the foundation shall be increased in depth to accommodate bolt lengths.

3.6.2 Minimum Bolt Sizes, Cast-In-Place Anchor Bolts

Maximum Equipment Weight (LBs)	Minimum Bolt Sizes (Inches)* Zone 3

500	1/2
1,000	1/2
5,000	1/2
10,000	1/2
20,000	1/2
30,000	1/2
50,000	5/8
100,000	**

*Based on four bolts per item, a minimum embedment of 12 bolt diameters, a minimum bolt spacing of 16 bolt diameters and a minimum edge distance of 12 bolt diameters. Equivalent total cross-sectional area shall be used when more than four bolts per item are provided. Anchor bolts shall conform to ASTM A 307. Anchor bolts shall have an embedded straight length equal to at least 12 times nominal diameter of the bolt.

**Equipment weighing more than 50,000 lb in Zones 3 and 4 shall have at least six bolts per item.

3.6.3 Expansion or Chemically Bonded Anchors

Expansion or chemically bonded anchors shall not be used unless test data in accordance with ASTM E 488 has been provided to verify the adequacy of the specific anchor and application. The expansion anchor size shall be not less than that required in paragraph Minimum Bolt Sizes, Cast-In-Place Anchor Bolts. Expansion and chemically bonded anchors shall be installed in accordance with the manufacturer's recommendations. The allowable forces shall be adjusted for the spacing between anchor bolts and the distance between the anchor bolt and the nearest edge, as specified by the manufacturer.

3.6.3.1 General Testing

Expansion and chemically bonded anchors shall be tested in place after installation. The tests shall occur not more than 24 hours after installation of the anchor and shall be conducted by an independent testing agency; testing shall be performed on random anchor bolts as described below.

3.6.3.2 Torque Wrench Testing

Torque wrench testing shall be done on not less than 50 percent of the total installed expansion anchors and at least one anchor for every piece of equipment containing more than two anchors. The test torque shall equal the minimum required installation torque as required by the bolt manufacturer. Torque wrenches shall be calibrated at the beginning of each day the torque tests are performed. Torque wrenches shall be recalibrated for each bolt diameter whenever tests are run on bolts of various diameters. The applied torque shall be between 20 and 100 percent of wrench capacity. The test torque shall be reached within one half turn of the nut, except for 3/8 inch sleeve anchors which shall reach their torque by one quarter turn of the nut. If any anchor fails the test, similar anchors not previously tested shall be tested until consecutive anchors pass. Failed anchors shall be retightened and retested to the specified torque; if the anchor still fails the test it shall be replaced.

3.7 RESILIENT VIBRATION ISOLATION DEVICES

Selection of anchor bolts for vibration isolation devices and/or snubbers for equipment base and foundations shall follow the same procedure as in paragraph ANCHOR BOLTS except that an equipment weight equal to five times the actual equipment weight shall be used.

3.7.1 Multidirectional Seismic Snubbers

Multidirectional seismic snubbers employing elastomeric pads shall be installed on all floor- or slab-mounted equipment. These snubbers shall provide 0.25 inches free vertical and horizontal movement from the static deflection point. Snubber medium shall consist of multiple pads of cotton duct and neoprene or other suitable materials arranged around a flanged steel trunnion so both horizontal and vertical forces are resisted by the snubber medium.

3.8 SWAY BRACES FOR PIPING

As indicated.

3.9 SWAY BRACES FOR DUCTS

3.9.1 Braced Ducts

As indicated.

3.9.2 Unbraced Ducts

Hangers for unbraced ducts shall be positively attached to the duct within 2 inches of the top of the duct with a minimum of two #10 sheet metal screws. Unbraced ducts shall be installed with a 6-inch minimum clearance to vertical ceiling hanger wires.

3.10 SWAY BRACES FOR CONDUIT

Conduit shall be braced as for an equivalent weight pipe.

3.11 EQUIPMENT SWAY BRACING

3.11.1 Suspended Equipment

Equipment sway bracing shall be provided for items supported from overhead floor or roof structures. Braces shall consist of angles, rods, wire rope, bars, or pipes arranged as shown and secured at both ends with not less than 1/2 inch bolts. Braces shall conform to paragraph Maximum Length for Anchor Braces. Sufficient braces shall be provided for equipment to resist a horizontal force equal to 1.13 times the weight of equipment without exceeding safe working stress of bracing components. Details of equipment bracing shall be submitted for approval. In lieu of bracing with vertical supports, these items may be supported with hangers inclined at 45-degrees directed up and radially away from equipment and oriented symmetrically in 90-degree intervals on the horizontal plane, bisecting the angles of each corner of the equipment, provided that supporting members are properly sized to support operating weight of equipment when hangers are inclined at a 45-degree angle.

3.11.2 Floor or Pad Mounted Equipment

3.11.2.1 Shear Resistance

Floor mounted equipment shall be bolted to the floor. Requirements for the number and installation of bolts to resist shear forces shall be in accordance with paragraph ANCHOR BOLTS.

3.11.2.2 Overturning Resistance

The ratio of the height of the equipment (measured from the base to the center of gravity of the equipment) to the minimum distance between anchor bolts shall be used to determine if overturning forces need to be considered in the sizing of anchor bolts. If this ratio is greater than 2.22 the bolt values in paragraph Minimum Bolt Sizes, Cast-In-Place Anchor Bolts shall not be used and calculations shall be provided to verify the adequacy of the anchor bolts for combined shear and overturning.

3.12 MISCELLANEOUS EQUIPMENT

3.12.1 Rigidly Mounted Equipment

The following specific items of equipment to be furnished under this contract shall be constructed and assembled to withstand a horizontal lateral force of 0.23 times the operating weight of the equipment, at vertical center of gravity of the equipment without causing permanent deformation, dislocations, separation of components, or other damage, which would render the equipment inoperative for significant periods of time following an earthquake.

Rigidly Mounted Equipment

Boilers
Chillers
Air-Handling Units
Transformers
Switch Boards
Free Standing Electric Motors

3.12.2 Nonrigid or Flexibly-Mounted Equipment

The following specific items of equipment to be furnished shall be constructed and assembled to resist a horizontal lateral force of 1.50 times the operating weight of the equipment at the vertical center of gravity of the equipment.

3.13 LIGHTING FIXTURES IN BUILDINGS

Lighting fixtures and supports shall conform to the following:

3.13.1 Pendant Fixtures

Loop and hook or swivel hanger assemblies for pendant fixtures shall be fitted with a restraining device to hold the stem in the support position during earthquake motions. Pendant-supported fluorescent fixtures shall also be provided with a flexible hanger device at the attachment to the fixture channel to preclude breaking of the support. The motion of swivels

or hinged joints shall not cause sharp bends in conductors or damage to insulation.

3.13.2 Recessed Fluorescent Fixtures

Recessed fluorescent individual or continuous-row mounted fixtures shall be supported by a seismic-resistant suspended ceiling support system and shall be fastened thereto at each corner of the fixture with bolts or approved clips; or shall be provided with fixture support wires attached to the building structural members using two wires for individual fixtures, attached to opposite corners, and one wire per unit of continuous row mounted fixtures. Each wire support shall be capable of supporting four times the weight of the fixture. Recessed lighting fixtures not over 56 pounds in weight and suspended or pendant-hung fixtures not over 20 pounds in weight may be supported by and attached directly to the ceiling system runners by a positive attachment such as screws or bolts, number and size as required by design seismic zone.

3.13.3 Assembly Mounted on Outlet Box

A supporting assembly that is intended to be mounted on an outlet box shall be designed to accommodate mounting features on 4 inch boxes, 3 inch plaster rings, and fixture studs.

3.13.4 Surface-Mounted Fluorescent Fixtures

Surface-mounted fluorescent individual or continuous-row fixtures shall be attached to a seismic-resistant ceiling support system. Fixture support devices for attaching to suspended ceilings shall be a locking-type scissor clamp or a full loop band that will securely attach to the ceiling support. Fixtures attached to underside of a structural slab shall be properly anchored to the slab at each corner of the fixture.

3.13.5 Lateral Force

Light fixture bracing shall be designed to resist a lateral force of 1.13 times the fixture weight.

3.14 SUSPENDED CEILING ASSEMBLIES

The structural members of ceiling support systems, used primarily to support acoustical tile panels or acoustical panel lay-in tiles, with or without lighting fixtures, ceiling-mounted air terminals, and ceiling-mounted services, shall conform to the following:

3.14.1 Design Loads

The main runners and cross-runners and their splices and intersection connections shall be designed for two times the design load or ultimate axial tension or compression (minimum 120 pounds.) The connections at the splices and intersections shall be of a mechanical interlocking type that cannot easily be disengaged. Ceiling structural systems shall be designed to withstand required vertical load as well as a lateral force of 23 percent of the ceiling weight. The ceiling weight shall include all lighting fixtures and other equipment that are laterally supported by the ceiling and shall be not less than 4.0 psf. Exception: Ceiling areas of 144 square

feet or less surrounded by walls that connect directly to the structure above will be exempt from the lateral-load standards of this specification.

3.14.2 Installation Requirements

Installation requirements shall be in accordance with ASTM E 580 except as follows:

3.14.2.1 Vertical Support

Hanger wires supporting a maximum tributary ceiling area of 16 square feet shall be a minimum of 10 gauge in diameter. The size of wires supporting a tributary ceiling area greater than 16 square feet shall be substantiated by design calculations. Hanger attachment devices used in ceiling systems not exceeding 4 psf shall be capable of supporting a minimum allowable load of 300 pounds. Hanger attachment devices used in ceiling systems exceeding 4 psf shall be capable of supporting the design load and shall be substantiated by design calculations. If hangers must be splayed more than one horizontal to six vertical, the resulting horizontal force shall be offset by bracing or counter-splaying, and substantiated by design calculations.

3.14.2.2 Lateral Support

In lieu of the design criteria stated above, where ceiling loads do not exceed 4 psf, lateral support for the ceiling system may be provided by four galvanized wires of minimum No. 12 gauge, as indicated in ASTM E 580, paragraph 4.4.6.

3.14.3 Lighting Fixture and Air Diffuser Supports

Lighting fixture and air diffuser supports shall be designed and installed to meet the requirements of equipment supports in the preceding paragraphs of this specification with the following exceptions:

a. Recessed lighting fixtures not over 56 pounds in weight and suspended and pendent-hung fixtures not over 20 pounds in weight may be supported and attached directly to the ceiling system runners by a positive attachment such as screws or bolts.

b. Air diffusers that weigh not more than 20 pounds and that receive no tributary loading from ductwork may be positively attached to and supported by the ceiling runners.

--End of Section--

SECTION 14240

ELEVATORS, HYDRAULIC

1 GENERAL

1.1 REFERENCES

The publications listed below form a part of this specification to the extent referenced. The publications are referred to in the text by basic designation only.

AMERICAN SOCIETY FOR TESTING AND MATERIALS (ASTM)

ASTM A 53	(1995a) Pipe, Steel, Black and Hot-Dipped, Zinc-Coated Welded and Seamless
ASTM A 106	(1994) Seamless Carbon Steel Pipe for High-Temperature Service
ASTM A 176	(1994) Stainless and Heat-Resisting Chromium Steel Plate, Sheet, and Strip
ASTM A 366	(1996) Steel, Sheet, Carbon, Cold-Rolled, Commercial Quality
ASTM A 568	(1993a) Steel, Sheet, Carbon, and High-Strength, Low-Alloy, Hot-Rolled and Cold-Rolled
ASTM A 569	(1996) Steel Carbon (0.15 Maximum Percent), Hot-Rolled Sheet and Strip Commercial Quality
ASTM D 92	(1996) Flash and Fire Points by Cleveland Open Cup
ASTM E 84	(1996a) Surface Burning Characteristics of Building Materials
ASTM E 152	(1981a) Fire Tests of Door Assemblies

AMERICAN SOCIETY OF MECHANICAL ENGINEERS (ASME)

ASME A17.1	(1993) Safety Code for Elevators and Escalators
ASME A17.2	(1994) Inspector's Manual for Elevators and Escalators
ASME B16.11	(1991) Forged Fittings, Socket-Welding and Threaded
ASME B31.1	(1995) Power Piping
ASME QEI-1	(1993; Addenda: QEI-1a-1995) Standard for the Qualification of Elevator Inspectors

CODE OF FEDERAL REGULATIONS (CFR)

36 CFR 1191	Americans with Disabilities Act (ADA) Accessibility Guidelines for Buildings and Facilities

FEDERAL STANDARDS (FED-STD)

FED-STD 795	(Basic) Uniform Accessibility Standards

INTERNATIONAL CONFERENCE OF BUILDING OFFICIALS (ICBO)

ICBO-01	(1994) Uniform Building Code (3 Vol.)

NATIONAL ELECTRICAL MANUFACTURERS ASSOCIATION (NEMA)

NEMA LD 3	(1991) High-Pressure Decorative Laminates
NEMA MG 1	(1993) Motors and Generators

NATIONAL FIRE PROTECTION ASSOCIATION (NFPA)

NFPA 70	(1996) National Electrical Code
NFPA 252	(1995) Fire Tests of Door Assemblies

1.2 SUBMITTALS

Government approval is required for submittals with a "GA" designation. Submittals having an "FIO" designation are for information only. The following shall be submitted in accordance with Section 01330 SUBMITTAL PROCEDURES:

SD-01 Data

Training Data; FIO.

Information describing the training course for operating personnel, training aids and samples of materials to be used, training schedules, and notification of training.

Elevator System; GA.

A complete list of equipment and material, including illustrations, schedules, manufacturer`s descriptive data and technical literature, performance charts, catalog cuts, installation instructions, brochures, diagrams, and other information required for fabrication and installation of the equipment. Data shall include calculations for reaction loads imposed on building by elevator systems and to demonstrate that the proposed elevator system meets requirements for seismic loading of zone 3 in accordance with ICBO-01. Certified copies of list reports may be submitted in lieu of calculations. Calculations to demonstrate compliance with ASME A17.1, Rule XXIV shall be included. Spare parts data for each different item of material and equipment specified, after approval of detail drawings and not later than 4 weeks prior to date of beneficial occupancy. Data shall include a complete list of parts and supplies, with current unit

prices and source of supply, and a list of parts recommended to be replaced and replacement interval required. Data shall include appropriate sizing of electrical protective devices.

SD-04 Drawings

Elevator System; GA.

Detail drawings including dimensioned layouts in plan and elevation showing the arrangement of elevator equipment, anchorage of equipment, clearances for maintenance and operation; and details on hoistway, doors and frames, operation and signal stations, controllers, motors, guide rails and brackets, cylinder and plunge unit, and points of interface with normal power, fire alarm system, HVAC or exhaust systems, and interface with emergency power systems. Drawings shall show any revised building electrical system required to make supplied elevator system function as specified. Drawings shall contain complete wiring diagrams showing electrical connections and other details required to demonstrate sequence of operation and functions of system devices. Drawings shall include the appropriate sizing of electrical protective devices which are frequently different from National Electrical Code standard sizes.

SD-06 Instructions

Framed Instructions; FIO.

Diagrams, instructions, and other sheets proposed for posting.

SD-08 Statements

Qualification Certificates; FIO.

Certificates of experience of elevator mechanics employed to install, supervise and test the elevator shall certify mechanics to have not less than 5 years experience installing, supervising and testing elevators of the type and rating specified. Certificate shall certify that elevator system installer is acceptable to elevator manufacturer prior to installation of elevators.

SD-09 Reports

Testing; FIO.

Test reports in booklet form showing all field tests performed to adjust each component and all field tests performed to prove compliance with the specified performance criteria, upon completion and testing of installed system.

SD-14 Samples

Finishes; GA.

Samples of materials and products requiring color or finish selection.

SD-18 Records

Test Procedures; GA

A plan detailing the testing procedures shall be submitted 60 days prior to performing the elevator tests.

SD-19 Operation and Maintenance Manuals

Elevator System; GA.

Six copies of operation manual outlining the step-by-step procedures for system startup, operation and shutdown. Manuals shall include manufacturer's name, model number, service manual, parts list and brief description of all equipment, including basic operating features. Six copies of maintenance manual listing routine maintenance procedures, possible breakdowns and repairs, and troubleshooting guides. Manuals shall include equipment layout and complete wiring and control diagrams of the system as installed. Operation and maintenance manuals shall be approved prior to training course.

1.3 QUALIFICATIONS

Hydraulic elevators shall be pre-engineered elevator systems, and provided by a company regularly engaged in the manufacture of elevator systems. The manufacturer shall either install the elevator system or provide letter of endorsement certifying that the elevator-system installer is acceptable to the manufacturer.

1.4 REGULATORY REQUIREMENTS

Design and fabrication shall be in accordance with ASME A17.1. Each car shall have the capacity to lift a live load, exclusive of the car, at a speed as specified in the following schedule. The approximate travel, terminal floors, number of stops and openings, and the car sizes shall be as shown in the schedule. The elevators shall serve the floors with stops and openings in accordance with the requirements indicated. Elevators shall provide accessibility and usability for physically handicapped in accordance with the requirements for the handicapped in FED-STD 795 and 36 CFR 1191.

1.4.1 Elevator Schedule (Passenger)

Number of Elevators Required:	1.
Service:	Passenger
Capacity:	2500 pounds
Speed: (150 fpm downspeed)	115 m/s (fpm) (full load up)
Platform Size:	Per ASME A17.1
Clear Car Inside:	68 inches wide by 51 inches deep
Net Travel:	14 feet
Landings:	2
Openings: Front	1

1.5 DESIGNATED LANDING

For the purposes of firefighter's service and emergency operations, as required by Section 211, ASME A17.1, the designated landing or level shall be the first floor. The alternate landing or level shall be the second floor.

1.6 DELIVERY AND STORAGE

All equipment delivered and placed in storage shall be stored with protection from the weather, excessive humidity and excessive temperature variations; and dirt, or other contaminants.

1.7 FIELD MEASUREMENTS

The Contractor shall become familiar with all details of the work, verify all dimensions in the field and advise the Contracting Officer of any discrepancy before performing any work.

1.8 WARRANTY

Warranty service shall be provided for each elevator for a period of 12 months after date of acceptance by Contracting Officer. Warranty service shall be performed only by trained elevator mechanics during regular working hours and shall include manufacturer's warranty requirements including but not limited to adjusting, lubricating and cleaning of equipment and furnishing supplies and parts to keep elevator in operation, except such parts made necessary by misuse, accident or negligence not caused by the Contractor. Testing and adjustments shall be in accordance with the applicable provisions of ASME A17.1 and ASME A17.2. Emergency callback service shall be included and available 24 hours a day, 7 days per week, with an initial telephone response time of 1 hour and a response time of 12 hours for a mechanic to the site. Inspection and service for fire service operation seismic requirements, shall be performed every 6 months. Documentation of inspection and testing, and certification of successful operation shall be provided with each unit.

2 PRODUCTS

2.1 GENERAL EQUIPMENT REQUIREMENTS

2.1.1 Standard Products

Material and equipment shall be the standard products of manufacturers regularly engaged in the fabrication of elevators and/or elevator parts, and shall essentially duplicate items which have been in satisfactory use for at least 2 years prior to bid opening. Equipment shall be supported by a service organization that is available 24 hours a day, 7 days per week, with a response time of 12 hours.

2.1.2 Nameplates

Each major item of equipment shall have the manufacturer's name, address, type or style, model or serial number, catalog number, and electrical and mechanical characteristics on a plate secured to the item of equipment.

2.1.3 Special Tools

One set of special tools, calibration devices, and instruments required for operation, calibration, and maintenance of the equipment shall be provided.

2.1.4 Electrical Work

Changes to the electrical distribution system required for coordination with elevator equipment shall be performed and coordinated by Contractor, at Contractor's expense. Electrical service for elevator machines shall be 480 volt, 60-Hertz, 3-phase, 3 wire ungrounded alternating current. For electrical service for elevator machine see electrical drawings. Electric service for elevator car lighting shall be 120-volt, single-phase, 60-Hertz grounded service. Electrical work shall conform to requirements in Section 16415 ELECTRICAL WORK, INTERIOR. A disconnect switch that will shutoff power to the elevator car lighting shall be provided in the elevator machine room adjacent to the elevator control panel. A telephone junction box and an elevator car lighting junction box shall be provided adjacent to each controller. A single-phase electric circuit with grounded connection for video monitor shall be provided in machine room.

2.1.5 Use of Asbestos Products

Materials and products required for manufacturing and installing elevators shall not contain asbestos.

2.2 MISCELLANEOUS MATERIALS

2.2.1 Materials for Car Enclosures

Materials for car enclosures shall meet flame spread rating 0 to 75 and smoke development 0 to 450 as tested in accordance with requirements of ASTM E 84 as established by ASME A17.1, Rule 204.2.

2.2.2 Structural Steel

Structural steel shall be hot-rolled commercial quality carbon steel, pickled, oiled, complying with ASTM A 569 and ASTM A 568.

2.2.3 Cold-Rolled Sheet Steel

Sheet steel shall be cold-rolled commercial quality low carbon steel, Class 1, exposed matte finish, oiled, complying with ASTM A 366 and ASTM A 568.

2.2.4 Stainless Steel

Stainless steel shall be ASTM A 176 Type 302/304, austenitic, corrosion-resistant, with grain of belting in the direction of longest dimension. Surfaces shall be smooth and without waves and shall be in compliance with ASTM A 366.

2.3 PASSENGER ELEVATOR CAR

2.3.1 Car Fronts

Fronts for passenger elevators shall be combination door post and return panels manufactured of 14-gaugestainless steel provided with necessary

cutouts for operating devices. Car operating panel shall be recessed into front return panel with surface-applied operating panel cover. Position indicator in front return shall be recessed with a surface-applied cover plate. Exposed stainless steel shall be finished with No. 4 Satin Finish, unless otherwise specified.

2.3.2 Car Doors

Car doors for passenger elevators shall be constructed from 16-gauge sheet steel and stainless steel cladding. Each door shall be sound-deadened and reinforced to receive required operating mechanism and hardware, and have two removable door guides per panel. Seams, screws or binding strips shall not be visible from within the car. Threshold shall be extruded aluminum with grooves for door guides. Exposed steel shall be finished with rust-inhibitive primer and baked-enamel in a color to be selected, unless otherwise specified. Car doors shall be equipped with a proximity-type infrared protective device having the following operation:

a. When doors are in full-open position, doors shall be unable to initiate closing if a person comes within detection zone. Detection zone moves with doors, so that if a passenger or object enters the zone after doors have begun to close, doors shall stop, then reverse to reopen. Doors shall reclose after a brief time. A passenger entering or leaving cars shall not cause doors to reopen unless doors reach a predetermined proximity to passenger.

b. After a stop is made, doors shall remain open for a time to permit passenger transfer, after which doors shall close automatically. This time interval shall be less for a car call than for a hall call or a coincident car/hall call.

c. If there is either a hall call anywhere in the group or a car call in the car in question and doors are prevented from closing for a fixed time period, door protective device shall be rendered inoperative, a buzzer shall sound in car and doors shall close at approximately half speed. Normal door operation shall resume at next landing reached by car.

2.3.3 Car Platform

Car platform for passenger elevators shall be fabricated from steel plates secured to a steel frame or plywood secured to a steel frame. Steel car platforms shall be assembled into a one-piece platform with top and bottom steel plates welded to structural steel frame and covered with felt and sound-isolation. Plywood car platform shall be 3/4-inch thick Exposure 1 plywood secured to underside of structural steel frame with metal fire protection secured to underside of structural steel frame.

2.3.4 Sling

Sling for passenger elevators shall be constructed of heavy steel stiles properly affixed to a steel crosshead and bolster with adequate bracing members to remove all strain from car enclosure. Steel bumpers shall be furnished for fastening sling to plunger.

2.3.5 Walls

Walls for passenger elevators shall be 7 feet 11-1/2 inches high from floor to the underside of lighting fixtures. Side and rear panels shall be 16-gauge sheet steel panels. Side and rear removable panels shall be applied to car walls and shall be manufactured from 3/4-inch plywood or composition board finished on front, back and edges faced with plastic laminate conforming to NEMA LD 3, general purpose type. Panels shall be mounted on car walls in a manner permitting their reversing. Panels shall be evenly spaced with not less than two panels on each side and three panels at rear with reveal standard with manufacturer. Vent around base shall be provided.

2.3.6 Car Top, Ceiling and Light Fixtures

Car top for passenger elevators shall be manufactured from 12-gaugesheet steel and shall be not less than 5-1/2 inches high with drop-ceiling and light fixtures. Ceiling shall be egg crate white plastic fire-retardant light diffuser supported by polished aluminum perimeter frame and dividers to form drop-ceiling light fixture. Light fixtures shall be fluorescent type flush with car ceiling, manufactured of sheet steel with flange and enclosed sides and top, baked-enamel reflector, mounted directly to outlet box. Bottom of fixtures shall be flush with car ceiling. Fluorescent light fixtures shall be dual lamp with quick-starting high-power factor, Class P ballasts with safety lamp guard clamps on fluorescent tubes. Light level shall average at least 10 footcandlesmeasured at the car threshold, with the door closed. A part of car light fixture shall be removable to permit use of the emergency exit panel in top of car.

2.3.7 Emergency Exit

Car top for passenger elevators shall be manufactured with a hinged emergency exit panel of 12-gauge steel which opens up to clear the crosshead and car door operator. Emergency exit panel shall be hinged on counterweight side and held in place with nonremovable fastening devices at each corner, and be openable from top of car only. A minimum of two sides of exit panel shall lap exit opening by 1 inch. Exits shall be equipped with electrical contacts which will prevent operation of car when the exit door is open and cause the alarm bell to ring.

2.3.8 Floor Finish

Floor finish for passenger elevators shall be finished with resilient tile flooring not less than 3/16-inch thick or flexible type homogeneous vinyl tile not less than 1/8-inchthick as specified in Section 09650 RESILIENT FLOORING. Tile shall be laid flush with the extruded aluminum platform threshold.

2.3.9 Base

Base for passenger elevators shall be plastic laminate 6 inches high.

2.3.10 Handrails

Handrails for passenger elevators shall be mounted on each wall and shall comply with ASME A17.1 and FED-STD 795 and 36 CFR 1191. For elevators with two-speed horizontal-slide openings, handrails shall be turned back to wall.

2.3.11 Exhaust Fan

Exhaust fan for passenger elevators shall be two-speed exhaust type ventilating unit mounted in car ceiling and shall be provided with a chrome-plated steel grille. Units shall be suitably isolated from car ceiling and shall provide at top speed of a minimum of 6 air changes per hour for car volume and car occupancy. Switches for the operation of the exhaust unit shall be located in car station locked cabinet or key-switched.

2.3.12 Communications

A telephone system in stainless steel cabinets shall be provided for passenger elevators. A vandal-resistant speaker type intercom with push-buttons to activate shall be installed in car station behind a stainless steel perforated grille and connected to a programmable auto-dialer located in machine room. Auto-dialer shall be provided with a solid-state charger unit which will automatically provide emergency power and an immediate transfer in the event of failure of normal power supply. The push-button located in car station or in separate cabinet shall be at the prescribed handicapped height and shall be identified as "EMERGENCY PHONE PUSH TO ACTIVATE". The entire communication assembly shall be approved for an elevator installation. The push button telephone shall comply with FED-STD 795 and 36 CFR 1191. The telephone communication shall not be terminated until one of the communicating parties hangs up the receiver or manually disconnects the communication link.

2.3.13 Car Emergency Lighting System

Emergency car lighting system for passenger elevators shall consist of an emergency power pack on top of the elevator and a remote lighting fixture inside elevator car located in car operating panel.

2.3.13.1 Power Pack

Power pack for emergency lighting system shall be a sealed lead-cadmium or nickel-cadmium 6-volt rechargeable batteries with solid-state controls and an integral regulating charger connected to normal power supply. Power pack unit shall contain the following:

a. Minimum 6-inch diameter alarm bell connected to the elevator alarm and emergency push-button.

b. Top of car light fixture with protective wire guard.

c. Testing circuit and pilot light.

d. Low-wattage pilot light indicator.

e. Battery low-voltage disconnect.

2.3.13.2 Emergency Light Fixture

Emergency light fixture shall be located in car station inside elevator car, with flush-mounted lens and shall consist of the following:

a. A minimum of two lamps capable of providing a minimum level of illumination of 1.0 footcandle at a point 4 feet above the floor, 1 foot in front of car station.

b. Steel fixture frame with white baked-enamel finish.

c. Frosted acrylic lens, 1/4 inch.

2.3.13.3 Remote Light Fixture

Upon interruption of normal power, remote light fixture for passenger elevators shall automatically and immediately illuminate and permit operation of alarm bell, subject to activation of emergency stop-switch or alarm button. Emergency power pack shall be capable of providing a minimum of 1 hour emergency bell operation and 4 hours of continuous illumination.

2.3.14 Protection Pads

Car shall be provided with wall protection pads with inconspicuous stainless steel pad hooks spaced not over 18 inches apart near the ceiling. Pads shall be heavy-quality fire-retardant treated canvas with two layers of sewn cotton batting with metal eyelets for each pad hook. Pads shall cover entire wall surface except operating devices.

2.3.15 Certificate Frame

A stainless steel certificate frame with translucent plexiglass lens of the appropriate size to receive certificate issued by inspecting agency shall be provided. Frame shall be engraved to show name of manufacturer, carrying capacity in pounds and maximum number of persons allowed.

2.3.16 Car Guide Shoes

Guide shoes for passenger elevators shall be the adjustable mounting type on each side of car. Shoes shall be rigidly secured in accurate alignment at top and bottom of car frame. Flexible type sliding guide shoes shall consist of a swivel-type shoe, assembled on a metal base with provisions for self-alignment. Each shoe shall be provided with renewable gibs. Car guide shoes shall be adjustable for side play between guide rails. Renewable wearing gibs shall be fabricated from a durable plastic compound material having a low coefficient of friction and long wearing qualities. Gibs shall be the type requiring minimum rail lubrication.

2.4 PASSENGER ELEVATOR HOISTWAY ENTRANCES

2.4.1 Hoistway Doors

Hoistway doors for passenger elevators shall be designed and fabricated as part of a Class B 1-1/2 Hour fire-rated door/frame assembly to meet requirements of NFPA 252 and shall bear the label of an approved testing laboratory. Doors for passenger elevators shall be hollow metal type with plain panel design not less than 1-1/4 inches thick with 16-gauge face sheet-steel panels, and stainless steel cladding, with 16-gauge sight guards to match door finish. Each door shall be reinforced with continuous vertical members and filled with sound-deadening material. Doors shall be reinforced to accept the required operating mechanism and hardware. Doors shall have two removable door guides per panel. Seams, binding strips or

screws shall not be visible from the landing. Exposed steel shall be finished with rust-inhibitive primer and baked-enamel in a color to be selected, unless otherwise specified.

2.4.2 Hoistway Frames

Hoistway frames for passenger elevators shall be designed and fabricated as part of a Class B 1-1/2 Hour fire-rated door/frame assembly to meet requirements of NFPA 252 and shall bear the label of an approved testing laboratory. Frames shall be formed 14-gauge sheet-steel [with stainless steel cladding] with head and jamb in flush alignment and corners welded and ground smooth. Head and jamb section shall be bolted assembly with bolts, washer and locking nut or lock washer. Frame assembly shall be securely fastened to the structure. Frames shall return to the wall. Combination buck and jamb frames may be provided with knockdown back flanges to permit installation in concrete walls. Exposed steel shall be finished with rust-inhibitive primer and baked-enamel in a color to be selected, unless otherwise specified.

2.4.3 Symbols

Raised stainless steel symbols as required by FED-STD 795 and 36 CFR 1191 of color selected, shall be provided at each floor to indicate the floor location. Symbols shall be attached with concealed fasteners. Symbols shall be placed in a location which can be seen by passenger from the opened passenger elevator doors.

2.4.4 Sills

Sills for passenger elevators shall be extruded aluminum with slip-resistant surface and machined grooves for door guides, secured to floor beams.

2.4.5 Strut Angles

Strut angles for passenger elevators shall be structural steel of size not less than 3 by 3 by 3/16-inch extending from sill to beam above and anchored to building structure with structural steel fastenings and bracings of structural members with a cross section of not less than strut angles.

2.4.6 Door Hangers and Housing

Each door panel shall be provided with not less than two sheave-type hangers designed for required door operation. Hanger housing and support shall be fabricated from formed Z-shaped steel angles of size not less than 3/16-inch thick bolted to strut angles.

2.4.7 Door Rollers

Door rollers shall be constructed with grease-packed ball-bearings and shall be tired with a sound-reducing material. Diameter of rollers shall not be less than 3-1/4 inches for car doors and not less than 2-1/4 inches for hoistway doors. Upward thrust shall be taken by a hardened and ground ball-bearing roller assembled on an eccentric stud to provide adjustment.

2.4.8 Hanger Track

Hanger track shall be of high carbon cold-drawn steel, round at top to receive door rollers, round at bottom to receive up-thrust rollers, of size engineered to accommodate load requirements.

2.4.9 Covers and Guards

Hanger covers, dust covers, toe guards and fascia plate shall be fabricated from 16-gauge reinforced steel and finished with baked-enamel. Hanger covers shall extend the full door travel and shall be mounted in sections for ease of servicing door hangers. Dust covers shall be provided over top terminal landing door only and shall be secured to hanger housing and building structure. Toe guards shall be secured to sill. Fascia plates shall be provided between each door hanger housing and sill.

2.5 PASSENGER ELEVATOR DOOR OPERATION

Car and hoistway doors for passenger elevators shall be operated simultaneously by an electric-power door operator. Doors shall operate smoothly in the opening direction and closing direction and be electrically or hydraulically cushioned to stop at both the full-open and full-closed position. Operators shall be high-speed heavy-duty type which will provide an average door-opening speed of 2-1/2 fps. Car and hoistway doors shall be opened and closed simultaneously in a maximum time of 4.1 seconds. When on automatic operation door-closing time shall not exceed 4.1 seconds and door-closing force shall not exceed 30 pounds.Reversal of doors when closing shall be accomplished by the "DOOR OPEN" button, car door safety edge, or interruption of the photoelectric light beams. Doors shall be arranged so that doors can be opened manually in the event of power failure.

2.6 PASSENGER ELEVATOR OPERATING AND SIGNAL FIXTURES

2.6.1 General

Elevator fixtures and panels for passenger elevators shall be constructed of 1/8-inch thick faceplates of stainless steel. Fastenings for all exposed fixtures shall be secured with tamper-proof spanner-head screws of same material and finish as fixture. Hall and car call-buttons shall be the call-register type with a low-voltage power supply not to exceed 48 volts. Pressure on a button shall illuminate button to indicate that a call in the desired direction has been registered. Car and hall fixtures shall be designed and located at the prescribed height to accommodate the handicapped in accordance with FED-STD 795 and 36 CFR 1191 for passenger elevators only. Handicapped markings shall be integral with faceplates in accordance with FED-STD 795 and 36 CFR 1191. Surface-applied markings are not acceptable. Engraving shall be black-filled except for fire-service identification which shall be red-filled. Operating and signal fixture contacts and lamps shall be completely enclosed in steel boxes finished with a baked-enamel. Boxes for hall landing devices shall be equipped for proper adjustment to wall. Lamps shall be installed in light-tight compartments. Cover-plates shall be provided with rubber gaskets when exposed to weather or harmful contaminants. Replacement bulbs shall be readily available from three sources.

2.6.2 Car Operating Panel

Car operating panel for passenger elevators shall be provided with the necessary raised 0.03 inch markings for the handicapped, and shall include a series of minimum 3/4-inch diameter or square push-buttons numbered to correspond to the floor served and various additional switches, buttons and light jewels, including emergency stop, alarm button, "DOOR OPEN" button and telephone. Operating buttons shall be of manufacturer's standard design. Buttons and switches not required for automatic or fire-service operation shall be key-operated and mounted on front-return car operating station. Elevator number and "NO SMOKING" shall be international symbol engraved on upper portion of car. Operating panel in car shall consist of a flush-mounted panel containing the following operating devices:

a. "DOOR OPEN" button.

b. "DOOR CLOSE" button.

c. Key-operated car fan/light switch.

d. Key-operated ventilating blower switch/call light.

e. Communication telephone.

f. Emergency stop-switch key-operated when operated will stop the car independently of normal stopping devices. Operation of emergency stop switch shall not cause any power variance or surge that may affect the operation or condition of the control panel or its components.

g. Emergency signal-switch connected to a 6-inch diameter signal bell outside of elevator hoistway at first floor located as shown or as directed.

h. Key-operated independent operation switch (for multi-car only).

i. Key-operated inspection switch which will render normal operation inoperative for the purpose of using the hoistway access switch.

j. Key-operated fire-service switch and light jewel.

k. Key-operated hospital emergency switch.

2.6.3 Hall-Call Station

Hall-call operating devices for passenger elevators at landing shall consist of an "UP" push-button at bottom landing, a "DOWN" push-button at top landing, and "UP" and "DOWN" push-buttons at all other landings. Buttons shall be manufacturer's standard design. Buttons shall be designed with 1/32-inch operating clearance to seat on faceplate in lieu of button mechanism. Buttons shall have maximum protrusion of 3/16-inchbeyond faceplate with beveled edges to prevent damage from side blows.

2.6.3.1 Commandeering Switch

Key-operated commandeering switch for passenger elevators shall be provided at each landing and located in landing call-button cover plate. Switch shall be momentary pressure type with the key removable only in "Off"

position and shall be keyed to match the independent operation switch specified for car operating devices.

2.6.3.2 Fire-Service Switch

Fire-service switch for passenger elevators shall be located at the designated landing.

2.6.4 Direction Lanterns

Lanterns for passenger elevators shall be in accordance with FED-STD 795 and 36 CFR 1191 and shall be provided at all floor landings and in each car entrance column. Lanterns shall be the manufacturer's standard design. Lanterns shall signal the approach of a stopping car when car is a predetermined distance from landing.

2.6.5 In-Car Car-Position Indicator

Indicator numerals and directional arrows for passenger elevators shall be 1-inch high, white translucent plastic. As car travels through hoistway the car position shall be indicated by illumination of light jewel corresponding to landing at which the car is stopped or passing. Necessary light baffles shall be provided. Floor numerals and letters shall illuminate white. Illumination shall be shrouded in an approved manner to protect against glare from car lighting.

2.6.6 Audible Signals

An audible signal shall be provided at each floor landing and in each car and shall sound coincident with the lantern illumination indicators. The audible signal shall be no less than 20 decibels with a frequency no higher than 1500 Hz. The audible signal shall sound once for UP direction and twice for DOWN direction.

2.6.7 Combination Hall-Position Indicator and Directional Arrows

Combination hall-position indicator and directional arrows for passenger elevators shall be provided at first floor landing directly above entrance frame. As elevator travels in hoistway, elevator position shall be indicated by illumination in alpha-numeric characters corresponding to the landing where elevator is stopped or passing. Number corresponding to position of car shall remain illuminated when motor is shut down. An audible signal shall sound in elevator car to indicate that the elevator is stopping or passing a floor served by elevator. Fixture design and operation shall be similar in design to that specified for Car Position Indicator.

2.7 PASSENGER CAR OPERATION (SINGLE-CAR SELECTIVE/COLLECTIVE)

Car shall be arranged so that by pressing 1 or more car buttons or landing buttons the car will start automatically and stop at first floor for which the button has been pressed which corresponds to the direction in which the car is traveling. Car shall stop in the order in which the floors are reached by the car and at all floors for which calls have been registered, regardless of the sequence in which buttons have been pressed, provided button for a given floor has been pressed sufficiently in advance of car's arrival at that floor to permit the stop to be made. If car buttons have

not been pressed, and car responds to several DOWN calls, car shall travel to highest DOWN call first and then reverse to collect UP calls. UP calls shall be collected in the same way when car starts DOWN in response to UP calls by first stopping for the lowest UP call registered. When a car has stopped in response to the pressing of a landing button and a car button is pressed corresponding to the direction in which the car has been traveling, within a predetermined interval of time after the stop, the car shall continue in that direction regardless of other landing calls registered. While car is in motion landing calls in the opposite direction of car movement shall not affect the operation of car but calls shall remain registered. After last car call has been answered in the direction the car is traveling, car shall automatically reverse and answer registered landing calls and all car calls in the order the landings are reached. When all calls have been answered, the car shall stop at the last floor served and shall have the doors closed.

2.8 AUTOMATIC EMERGENCY POWER OPERATION

Elevator control system shall be arranged to operate on emergency power supply upon failure of the normal power supply. Elevators operating on dedicated service, will not be required to return to designated landing when emergency power becomes available for respective elevator. Elevators shall operate as follows:

a. When normal power supply fails, all cars shall shut down.

b. One car shall automatically start and travel at full-rated speed to designated landing, stop, open the car and hoistway doors, then shut down.

c. After first car shuts down, other cars in the group shall individually operate as described above.

d. After all cars have moved to first floor a preselected car shall operate at rated speed to serve car and landing calls. Automatic selection can be overridden manually. Emergency power selector buttons and light jewels shall be provided in a stainless steel faceplate at the designated landing. Emergency power selector buttons shall be operable after automatic return has been completed, and shall permit the selection of a maximum of 1 elevator at a time.

2.9 AUTOMATIC ELEVATOR OPERATION

2.9.1 General

The operating device shall consist of a series of push-buttons in the car numbered to correspond to various landings, "UP" and "DOWN" buttons at intermediate landings and a single button at terminal landing. To meet the elevator operation requirements specified in this section all buttons shall be connected electrically to the control system which governs the floor selection, car selection, direction of travel and governs the acceleration and retardation.

2.9.2 Operation

Car calls shall be registered within the car by pressing the button corresponding to the designated floors. Hall calls shall be registered by

pressing buttons in the corridor push-button fixture. Once the demand for elevator service has been established and the car has received a start signal the car operation shall be as follows.

2.9.2.1 Door Closing

Doors shall close automatically. When doors are fully closed and the interlock circuit established, the car shall start to move in the direction established by control system. Car shall accelerate and decelerate automatically and stop at first floor for which a car button has been registered or at first floor for a corridor demand which has been assigned to car. Car shall stop at all floors for which car calls are registered in the order in which the floors are reached and shall stop for any corridor demands assigned to the cars in the order in which the floors are reached.

2.9.2.2 Door Opening

Doors shall open automatically as car reaches the landing. After a predetermined time the doors shall close and the car shall proceed to answer the remaining car or assigned corridor calls. A protective device such as a safety edge and light beam device shall be provided on car door and when activated will prevent closing of doors. Cars shall become available for assignment at whatever floor the last car demand has been satisfied in the direction in which the car is traveling.

2.9.2.3 Car Dispatch

When car does not receive a demand dispatch at dispatching floor for an adjustable time period up to 10 minutes set initially at 5 minutes, the motor drive unit shall be switched-off. If the car's switched-off motor drive unit receives a demand dispatch the motor drive unit shall automatically restart.

2.9.2.4 Door Dwell-Time

Door open dwell-times shall be adjustable so that the open time for a car call is shorter than the open time for corridor calls and second passengers. If a longer time is needed for passenger entry, doors can be prevented from closing or reversing by the light beam door control, the protective leading edge on car door, or by pressing "DOOR OPEN" button in car. Door dwell-times shall comply with FED-STD 795and 36 CFR 1191.

2.9.3 Automatic Load Weighing

Passenger elevators shall be provided with load-weighing devices which will cause elevator to bypass hall calls when elevator is filled to an adjustable percentage. Corridor calls shall remain registered until the next available car responds to the call.

2.9.4 Anti-Nuisance

Passenger elevators shall be provided with a system which will cancel all car calls in the event that between 3 to 5 times the number of car calls are registered as there are passengers in car, allowing 150 pounds per passenger.

2.9.5 Door Operation

Double-door operation are not acceptable for passenger elevators. If an UP traveling car has a passenger for an intermediate floor and a DOWN call is registered at that floor with no-calls above car, the car shall travel to floor, open the door and let passenger out, then light the DOWN direction arrow in hall lantern and accept the waiting passenger who registered the DOWN call. Doors shall not perform the open-close cycle before elevator proceeds to next call.

2.9.6 Automatic Power Shutdown

Elevator control system shall cause automatic power shutdown of the elevators in the event that a heat detector or sprinkler head located in the elevator machine room or in the elevator hoistway activates. Heat detector shall be fixed-temperature-rate-of-rise type, rated at 135 to 140 degrees F. Activation of a heat detector or a waterflow switch, which monitors only the sprinkler heads in elevator machine room and in the hoistway, shall cause the following operations to the affected elevators:

a. Elevators which are in motion will proceed to the nearest available landing away from fire floor, and shall cause power-operated doors to open and remain open. The fire floor is considered the floor where the fused sprinkler head or heat detector is located.

b. Elevators which are standing at a landing with open doors will remain open at the floor. If power-operated doors are closed, the elevator will cause doors to open.

c. Power to the elevators will be automatically shutdown by operating the shunt-trip breaker(s) in the main line power supply. Shutdown will occur only after the elevators are stopped at a landing, and power-operated doors are opened.

d. Automatic shutdown will override Phase I Emergency Recall Operations, ASME A17.1, Rules 211.3a and 211.3b, but will not override Phase II Emergency In-Car Operation, ASME A17.1, Rule 211.3c if Phase II operation is in effect.

2.10 SENSOR AND CONTROL WIRE SURGE PROTECTION

Digital and analog inputs shall be protected against surges induced on control and sensor wiring. Digital and analog outputs shall be protected as shown against surges induced on control and sensor wiring installed outdoors. Fuses shall not be used for surge protection. The inputs and outputs shall be tested in both normal mode and common mode using the following waveforms:

a. A 10 microsecond rise time by 1000 microsecond pulse width waveform with a peak voltage of 1500 volts and a peak current of 60 amperes.

b. An eight microsecond rise time by 20 microsecond pulse width waveform with a peak voltage of 1000 volts and a peak current of 500 amperes.

2.11 COMMUNICATIONS LINKS SURGE PROTECTION

Communications equipment shall be protected against surges induced on any communications link. Cables and conductors, except fiber optics, which serve as communications links from Motor Control Room (MCR) to field equipment, and between field equipments shall have surge protection circuits installed at each end. Protection shall be furnished at equipment and additional triple electrode gas surge protectors rated for the application on each wireline circuit shall be installed within 3 feet of the building cable entrance. Fuses shall not be used for surge protection. The inputs and outputs shall be tested in both normal mode and common mode using the following two waveforms:

a. A 10 microsecond rise time by 1000 microsecond pulse width waveform with a peak voltage of 1500 volts and a peak current of 60 amperes.

b. An eight microsecond rise time by 20 microsecond pulse width waveform with a peak voltage of 1000 volts and a peak current of 500 amperes.

2.12 COMMUNICATIONS LINKS OVER VOLTAGE PROTECTION

Communications equipment such as MODEMs, line drivers, and repeaters shall be protected against overvoltage on any communications link conductors. Cables and conductors, which serve as communications links, except fiber optics, shall have overvoltage protection for voltages up to 480 Vac rms, 60 Hz installed. Instrument fuses or fusible resistors are required for this application.

2.13 FIREFIGHTERS SERVICE

Firefighter service shall be in accordance with ASME A17.1 for automatic elevators. Elevator lobby and machine room smoke detectors shall be in accordance with Section 16721 FIRE DETECTION AND ALARM SYSTEM.

2.14 ELEVATOR POWER UNIT

2.14.1 Pumping and Control Mechanism

Hydraulic fluid shall be provided in the reservoir, pump and control valve. Hydraulic fluid shall have a minimum fire point of 375 degrees F as established by ASTM D 92. If oil temperature drops below pre-set minimum, elevator shall be dispatched automatically to lowest terminal floor at which point the pump will bypass oil in system without car motion until pre-set temperature is reached. Normal response to passenger demand shall not be affected by this control. Resistance type heating elements do not meet the intent of this specification.

2.14.1.1 Oil Temperature Device

An oil temperature device shall be provided that will maintain oil temperature between 70 degrees and 100 degrees F regardless of ambient temperatures.

2.14.1.2 Pump

Pump shall be a rotary-positive displacement type for oil-hydraulic elevator service designed for steady discharge with minimum pulsation to give smooth and quiet operation, with an output which will not vary more than 10 percent between no-load and full-load on the elevator. Operating pressure shall not exceed 400 psi.

2.14.1.3 Piping

Piping shall be ASTM A 53 Grade E or S, ASTM A 106 Grade B, or grooved piping system of minimum schedule 40 seamless steel conforming to ASME A17.1 and ASME B16.11. Pipes shall conform to the cleanliness requirements of ASME B31.1.

2.14.1.4 Motor

Motor shall be especially designed for oil-hydraulic elevator service and shall be of standard manufacture duty rating and provided with specified speeds and loads.

2.14.1.5 Oil-Control Unit

Oil-control unit shall contain the following valve assemblies:

a. Automatic shut-off valve shall be provided in the oil-supply line as close to the cylinder inlet as possible. When there is a 10 percent drop in NO-LOAD operating pressure, the automatic shut-off valve shall be activated. When activated, the device shall immediately stop the descent of elevator and hold the elevator until it is lowered by use of the maximum lowering feature of the valve. Manual lowering feature of automatic shut-off valve shall be arranged to limit the maximum descending speed of elevator to 15 feet per minute.Exposed adjustments of automatic shut-off shall have the means of adjustment sealed after being set to the correct position.

b. Relief-valve for hydraulic shall be externally adjustable and shall bypass the total oil flow without increasing back pressure by more than 56 percent above working pressure.

c. Safety check-valve shall close quietly without permitting any perceptible reverse flow and shall be designed to support the elevator on a positively locked column of oil when car is at rest.

d. Up-start and stop valve shall be externally adjustable and shall bypass oil flow during the start-and-stop of motor-pump assembly. Valve shall close slowly, gradually diverting oil to the jack unit to insure smooth up-start and up-step.

e. Lowering and leveling valve shall be externally adjustable for drop-away speed, lowering speed, leveling speed and stopping speed to insure smooth down-starts and stops. Leveling valve shall be designed to level the car to floor in the direction the car is traveling when slowdown is initiated.

f. Manual lowering valve shall be capable of lowering the elevator car in event of power failure. Manual-lowering valve shall be arranged to limit the maximum descending speed under manual operation to 15 fpm.

g. A service check-valve shall be installed in oil supply line between power unit and jack.

2.14.1.6 Storage Tank

Storage tank shall be single-wall construction of steel with a steel cover. Manufacturer's recommendation for the type of oil to be used shall be included in written instructions for the care, adjustment and maintenance of equipment.

2.14.1.7 Controller

Electric controller shall be of the microprocessor based logic type with battery backup provided with reduced voltage starting. Components required for proper elevator performance shall be neatly mounted and wired and completely enclosed in a cabinet with a mechanically-latched door. Control cabinet shall be designed for mounting on power unit, wall or floor stand. Electric control apparatus shall be completely isolated from oil reservoir. A feature shall be incorporated in electrical control circuit which will cause elevator car to descent automatically to the lowest terminal landing, if the system runs low on oil during ascending of the car. If power-operated doors are used, the car and hoistway doors shall automatically open when car reaches landing to allow passengers to exit. Parked car shall have doors in closed position and all control buttons shall be made inoperative.

2.14.2 Sound Reduction

Sound-insulating panels shall isolate airborne noise from motor pump assembly. Openings must be provided to adequately ventilate the power unit motor. A minimum of 2 sound-isolating couplings shall be installed in oil line in machine room between pump and jack. Couplings shall be designed and manufactured to be blowout proof. Oil-hydraulic silencer shall be installed in oil line near power unit and shall contain pulsation absorbing material surrounded by a blowout-proof housing. Power unit assembly shall be mounted on vibration pads to isolate the unit from building structure.

2.15 LEVELING DEVICE

Elevators shall be equipped with a 2-way leveling device to automatically bring the car to floor landings. Car shall automatically re-level at each landing to correct the overtravel and undertravel, and maintain the level regardless of load on car. Electric stopping system shall be arranged so that the car will stop level with the floor before brake is set. Stopping accuracy shall not exceed a plus or minus 1/4 inch.

2.16 JACK UNIT

Jack unit shall be designed and constructed of sufficient size to lift the gross load to the height specified and shall be free from oil leakage. Brittle material such as grey cast iron shall not be used in jack construction. Jack unit shall consist of the following:

a. Direct displacement or Telescoping plunger fabricated of heavy seamless steel tubing accurately turned and polished.

b. Stop-ring welded or screwed to the plunger to positively prevent plunger from leaving the cylinder.

c. Internal guide bearing.

d. Packing or seal.

e. Drip ring around cylinder top.

f. Outer cylinder made of steel tubing.

g. Air bleeder.

h. Brackets welded to jack cylinder for supporting the elevator on pit channels.

i. Scavenger pump with copper tubing connected to the tank.

2.17 ELEVATOR SUPPORTS

Structural steel beams, inserts, brackets, bolts and fastening devices shall be provided for proper installation of elevator equipment. Wood plugs are not acceptable.

2.18 BUFFERS

Buffers shall be of design suitable for depth of pit. Buffer anchorage at pit floors shall be provided for each car and counterweight and arranged to avoid puncturing the pit waterproofing. Type of buffer used shall be tested and approved for compliance with elevator service requirements before installation. Pipe struts and steadiers shall be provided as required for pit conditions. A metal plate with information concerning stroke and load-rating shall be permanently fastened to each buffer. Pit-mounted buffers shall have an adequate stroke designed to bring the fully-loaded car and counterweight to rest from governor tripping speed at an average rate of retardation not exceeding gravity. Moving portion of buffer shall be designed to be accelerated by the car without noticeable peak retardation. Spring buffers shall be in accordance with ASME A17.1.

2.19 LUBRICATION POINTS

Every part subject to movement friction shall be provided with provisions for oil or grease lubrication. All points of lubrication shall be readily accessible.

2.20 SEISMIC REQUIREMENTS

Seismic protection shall be provided to conform to ASME A17.1, Appendix F.

3 EXECUTION

3.1 INSTALLATION

Elevators and equipment shall be installed in accordance with ASME A17.1 and manufacturer's recommendation. Guide rails shall be set plumb and parallel and attached to guide rail brackets secured to building structure as indicated and at intervals not exceeding 9 feet 8 inches. Steel shim plates shall be used for aligning equipment. Guide rail sections shall be joined together in accordance with ASME A17.1. Guide rails shall be thoroughly cleaned and made smooth before elevator is put into operation. During installation all stainless steel shall be protected.

3.2 FIELD WELDING

When structural or load-bearing members are to be field welded, welding and qualification of welders shall be as specified in Section 05055WELDING, STRUCTURAL.

3.3 CASING, CYLINDER AND PLUNGER UNIT

A steel casing minimum 8 inches larger in diameter than the cylinder sealed at bottom with steel plate or concrete plug shall be complete with provisions to accommodate a single wall cylinder. Casing shall be accurately positioned, plumbed and set to accept the cylinder. The cylinder shall be protected from corrosion by totally enclosing the cylinder with a separate schedule 80, polyvinyl chloride jacket or with a high density, fused polyethylene coating, recommended by the manufacturer. Area between casing and cylinder wall shall be filled with washed dry sand after cylinder has been accurately located. Top of casing shall be sealed. The work of boring the well and setting the cylinder shall be coordinated with construction of concrete pit.

3.4 ELEVATOR WIRING

Wiring shall be provided for electrically-operated items of elevator equipment to comply with requirements of NFPA 70 and Section 16415ELECTRICAL WORK, INTERIOR. For control and signal circuits wire shall be minimum No. 16 AWG. For power and lighting circuits wire shall be minimum No. 12 AWG. Work light fixtures equipped with 150 watt incandescent lamps and ground duplex receptacles shall be provided at top and bottom of car. Work light fixtures and traveling cable junction boxes shall be located to provide illumination at junction boxes. Wiring shall terminate in junction boxes. Wires shall be identified and shall match symbols shown on wiring diagrams. Control and signal wires shall be brought to accessible numbered terminal blocks on the controller. Intra-panel wiring shall be flame-resistant type.

3.4.1 Traveling Cables

Cables shall terminate at numbered terminal blocks in car and machine room. Traveling cable shall be provided with a separate shielded circuit for communication system and hang to obtain proper size of loop. Traveling cable shall be provided with 10 percent spare conductors for each car.

3.5 PAINTING

Except for factory-finished items and corrosion-resistant items, machined surfaces shall be painted as specified in Section 09900 PAINTING, GENERAL.

3.6 TESTING

Testing shall be in accordance with requirements of ASME A17.1 and ASME A17.2 and as specified below. The contractor shall conduct a complete test of the system. After the system has passed all tests, the Contractor shall notify the Contracting Officer in writing, 7 days prior to the time of performing the acceptance test, that the system is complete and is ready for final acceptance testing. The Contractor after receiving written approval from the Contracting Officer will conduct a complete acceptance test of the system. The Contractor shall provide the services of an elevator inspector, employed by an independent testing company to inspect the elevators, witness the final testing and certify the elevators. The inspector shall meet all qualification requirements of ASME QEI-1and shall be certified in accordance with ASME QEI-1. The Contractor shall provide an elevator certificate signed by the inspector for each elevator. The certificate shall be provided to the Contracting Officer within 30 day after the completion of all testing.

3.6.1 Testing Period

Each elevator shall be tested with the specified rated-load in car continuously for a period of 35 percent of the duty time. During the test run the car shall be stopped at all floors in both directions of travel for a standing period of 10 seconds per floor. A manual test of the final limits (UP and DOWN overtravel) shall also be performed.

3.6.2 Speed Load Testing

The actual speed of elevator car in both directions of travel shall be determined with the rated-load and with no-load in the elevator car. Actual measured speed of car with the rated-load in the UP direction shall be within 5 percent of rated speed. The maximum difference in actual measured speeds obtained under the various conditions outlined shall not exceed 10 percent of the total difference between the UP and DOWN speeds.

3.6.3 Car Leveling Testing

Elevator car-leveling devices shall be tested for accuracy of landing at all floors with no-load in car, with symmetrical load in car and with the rated-load in car in both directions of travel.

3.6.4 Temperature Rise Testing

Temperature rise of hydraulic pump motor, motor drive, exciter and booster shall be conducted during the full-load test run for minimum one hour. Under these conditions, temperature rise of equipment shall not exceed the requirements established in NEMA MG 1 Chapter 12. Test shall be started when all parts of equipment are within the temperature required by NEMA at time of starting tests.

3.6.5 Insulation-Resistance Testing

Insulation-resistance testing shall be performed to ensure that the complete elevator wiring systems will be free from short circuits and grounds. Electrical conductors shall have an insulation-resistance of not less than 1 megohm between each conductor and ground, and not less than 1 megohm between each conductor and all other conductors. Prior to testing, provisions shall be made to prevent damage to electronic devices.

3.7 FRAMED INSTRUCTIONS

Two sets of instructions shall be typed and framed under glass or in laminated plastic, and posted side-by-side in the elevator room where directed before acceptance of elevator systems. First set of instructions shall include wiring and control diagrams showing the complete layout of elevator system. Second set of instructions shall include the condensed operating instructions describing preventive maintenance procedures, the methods for checking the elevator system for normal safe operation, and the procedures for safely starting and stopping the elevator system.

3.8 OPERATOR TRAINING

Contractor shall conduct a formal training course for operating Government personnel which shall include care, lubrication, adjustment and maintenance of elevator equipment. Training period shall consist of a total of 4 hours of normal working time and shall start after the system is functionally completed but prior to final acceptance tests. Field instructions shall cover all of the items contained in the operating and maintenance instructions, including demonstrations of routine maintenance operations. Contracting Officer shall be notified at least 14 days prior to date of starting the training course.

END OF SECTION

SECTION 15250

THERMAL INSULATION FOR MECHANICAL SYSTEMS

1 GENERAL

1.1 REFERENCES

The publications listed below form a part of this specification to the extent referenced. The publications are referred to in the text by basic designation only.

AMERICAN SOCIETY FOR TESTING AND MATERIALS (ASTM)

ASTM A 167	(1993) Stainless and Heat-Resisting Chromium-Nickel Steel Plate, Sheet, and Strip
ASTM A 580	(1995) Stainless and Heat Resisting Steel Wire
ASTM A 641	(1992) Zinc-Coated (Galvanized) Carbon Steel Wire
ASTM B 209	(1995) Aluminum and Aluminum-Alloy Sheet and Plate
ASTM C 195	(1990) Mineral Thermal Insulating and Cement
ASTM C 449	(1988) Mineral Fiber Hydraulic-Setting Thermal Insulating and Finishing Cement
ASTM C 533	(1985; R 1990) Calcium Silicate Block and Pipe Thermal Insulation
ASTM C 534	(1994) Preformed Flexible Elastomeric Cellular Thermal Insulation in Sheet and Tubular Form
ASTM C 547	(1977; R 1993) Mineral Fiber Preformed Pipe Insulation
ASTM C 552	(1991) Cellular Glass Thermal Insulation
ASTM C 553	(1992) Mineral Fiber Blanket Thermal Insulation for Commercial and Industrial Applications
ASTM C 612	(1993) Mineral Fiber Block and Board Thermal Insulation
ASTM C 647	(1989a) Properties and Tests of Mastics and Coating Finishes for Thermal Insulation
ASTM C 795	(1992) Thermal Insulation for Use in Contact With Austenitic Stainless Steel

ASTM C 916	(1985; Rev 1990) Adhesives for Duct Thermal Insulation
ASTM C 920	(1987) Elastomeric Joint Sealants
ASTM C 921	(1989) Determining the Properties of Jacketing Materials for Thermal Insulation
ASTM D 3278	(1989) Test Methods for Flash Point of Liquids by Setaflash Closed-Cup Apparatus
ASTM E 84	(1995) Surface Burning Characteristics of Building Materials
ASTM E 96	(1994) Water Vapor Transmission of Materials

MANUFACTURERS STANDARDIZATION SOCIETY OF THE VALVE AND FITTINGS INDUSTRY (MSS)

MSS SP-69	(1991) Pipe Hangers and Supports - Selection and Application

MIDWEST INSULATION CONTRACTORS ASSOCIATION (MICA)

MICA-01	(1993) National Commercial & Industrial Insulation Standards

NATIONAL FIRE PROTECTION ASSOCIATION (NFPA)

NFPA 90A	(1993) Installation of Air Conditioning and Ventilating Systems

UNDERWRITERS LABORATORIES (UL)

UL 723	(1993; Rev Apr 1994) Test for Surface Burning Characteristics of Building Materials

1.2 SYSTEM DESCRIPTION

Field-applied insulation and accessories on mechanical systems shall be as specified herein; factory-applied insulation is specified under the piping, duct or equipment to be insulated. Chilled water distribution systems outside of buildings are specified to be insulated in Section 02698 PREFABRICATED UNDERGROUND HEATING/COOLING DISTRIBUTION SYSTEM.

1.3 GENERAL QUALITY CONTROL

1.3.1 Standard Products

Materials shall be the standard products of manufacturers regularly engaged in the manufacture of such products and shall essentially duplicate items that have been in satisfactory use for at least 2 years prior to bid opening.

1.3.2 Installer's Qualifications

Qualified installers shall have successfully completed three or more similar type jobs within the last 5 years.

1.3.3 Surface Burning Characteristics

Unless otherwise specified, insulation not covered with a jacket shall have a flame spread rating no higher than 75 and a smoke developed rating no higher than 150. The outside surface of insulation systems which are located in air plenums, in ceiling spaces, and in attic spaces shall have a flame spread rating no higher than 25 and a smoke developed rating no higher than 50. Insulation materials located exterior to the building perimeter are not required to be fire-rated. Flame spread and smoke developed ratings shall be determined by ASTM E 84. Insulation shall be tested in the same density and installed thickness as the material that shall be used in the actual construction. Jackets shall comply with the flame spread and smoke developed ratings required by ASTM C 921.

1.3.4 Identification of Materials

Packages or standard containers of insulation, jacket material, cements, adhesives, and coatings delivered for use, and samples required for approval shall have manufacturer's stamp or label attached giving the name of the manufacturer and brand, and a description of the material.

1.4 SUBMITTALS

Government approval is required for submittals with a "GA" designation; submittals having an "FIO" designation are for information only. The following shall be submitted in accordance with Section 01330 SUBMITTAL PROCEDURES:

SD-01 Data

Thermal Insulation Materials FIO.

A complete list of materials, including manufacturer's descriptive and technical literature, performance data, catalog cuts, and installation instructions. Materials furnished under this section of the specification shall be submitted at one time. A schedule indicating the product number, k-value, thickness and furnished accessories for each mechanical system requiring insulation shall be included.

SD-14 Samples

Thermal Insulation Materials FIO.

A display of insulated sections as specified in this section, after approval of materials and prior to insulating any piping or ductwork. Each material used shall be identified, by indicating on an attached sheet the specification requirement for the material and the material by each manufacturer intended to meet the requirement. Display sample sections will be inspected at the jobsite by the Contracting Officer. Approved display sample sections shall remain on display at the jobsite during the construction period. Upon completion of construction, the display sample sections will be returned to the Contractor.

Pipe Insulation Display Sections: Display sample sections shall include as a minimum an elbow or tee, a valve, dielectric unions and flanges, a hanger with protection shield and insulation insert, or dowel as required, at support point, method of fastening and sealing insulation at longitudinal lap, circumferential lap, butt joints at fittings and on pipe runs, and terminating points for each type of pipe insulation used on the job, and for hot pipelines and cold pipelines, both interior and exterior, even when the same type of insulation is used for these services.

Duct Insulation Display Sections: Display sample sections for rigid and flexible duct insulation used on the job.

SD-18 Records

Thermal Insulation Materials; FIO.

Three copies of a booklet indicating the types of insulation by referencing MICA-01, at the jobsite. After approval of materials and prior to insulating any equipment, a booklet shall be prepared and submitted for approval which contains marked-up MICA-01 plates or detail drawings showing the insulation material and insulating system for each type of equipment which is required to be insulated per paragraph EQUIPMENT INSULATION INSTALLATION. The MICA plates shall be marked-up showing the materials to be installed in accordance with the requirements of this specification for the specific insulation application. The Contractor shall submit all MICA Plates required to show the entire insulating system, including Plates required to show insulation penetrations, vessel bottom and top heads, legs, and skirt insulation as applicable. If the Contractor elects to submit detailed drawings instead of marked-up MICA Plates, the detail drawings shall show cut-away, section views, and details indicating each component of the insulation system and showing provisions for insulating jacketing, and sealing portions of the equipment. The drawings shall be labeled with a description of each material type with materials and insulating systems, in accordance with this specification. Each material and insulating system that is used shall be identified by indicating the specification requirement for the material, and the material by each manufacturer that is intended to meet the requirement. Three copies of the booklet shall be submitted at the jobsite to the Contracting Officer. One copy of the approved booklet shall remain with the display sample and two copies shall be provided for Government use.

1.5 STORAGE

Materials shall be delivered in the manufacturer's unopened containers. Materials delivered and placed in storage shall be provided with protection from weather, humidity, dirt, dust and other contaminants by the Contractor. Insulation material and supplies that become dirty, dusty, wet, or otherwise contaminated may be rejected by the Contracting Officer.

2 PRODUCTS

2.1 GENERAL MATERIALS

Materials shall be compatible and shall not contribute to corrosion, soften, or otherwise attack surfaces to which applied in either the wet or dry state. Materials to be used on stainless steel surfaces shall meet ASTM C

795 requirements. Materials shall remain in the manufacturer's unopened containers until actual use and shall not be transferred to any other containers. Materials shall be asbestos free and conform to the following:

2.1.1 Adhesives

2.1.1.1 Acoustical Lining Insulation Adhesive

Insulation shall be applied in cut-to-size pieces attached to the interior of the duct with a nonfalmmable, fire-resistant adhesive conforming to ASTM C 916, Type I, NFPA 90A, UL 723, and ASTM E 84. Exposed edges of the liner at the duct ends and at other joints where the lining will be subject to erosion shall be coated with a heavy brush coat of the nonflammable, fire-resistant adhesive to prevent delamination of glass fibers.

2.1.1.2 Mineral Fiber Insulation Cement

Cement shall be in accordance with ASTM C 195.

2.1.1.3 Contact Adhesive

Adhesive shall be Type II, Class 1.

2.1.1.4 Lagging Adhesive

Lagging adhesives shall be nonflammable, fire-resistant in accordance with NFPA 90A, UL 723, and ASTM E 84. Adhesives shall be either the Class 1 or Class 2 type. Class 1 adhesive shall be pigmented white and be suitable for bonding fibrous glass cloth to faced and unfaced fibrous glass insulation board; for bonding cotton brattice cloth to faced and unfaced fibrous glass insulation board; for sealing edges of and bounding fibrous glass tape to joints of fibrous glass board; or for bonding lagging cloth to thermal insulation. Class 2 adhesive shall be pigmented white and be suitable for attaching fibrous glass insulation to metal surfaces. Lagging adhesives shall be applied in strict accordance with the manufacturer's recommendations.

2.1.2 Contact Adhesive

Adhesive may be dispersed in a nonhalogenated organic solvent with a low flash point (flash point plus or minus 25 degrees F) or, dispersed in a nonflammable organic solvent which shall not have a fire point below 200 degrees F. The adhesive shall not adversely affect, initially or in service, the insulation to which it is applied, nor shall it cause any corrosive effect on metal to which it is applied. Any solvent dispersing medium or volatile component of the adhesive shall have no objectionable odor and shall not contain any benzene or carbon tetrachloride. The dried adhesive shall not omit nauseous, irritating, or toxic volatile matters or aerosols when the adhesive is heated to any temperature up to 212 degrees F. The adhesive shall be nonflammable, fire resistant conforming to ASTM E 84.

2.1.3 Caulking

ASTM C 920, Type S, Grade NS, Class 25, Use A.

2.1.4 Corner Angles

Nominal 0.016 inch aluminum 1 x 1 inch with factory applied kraft backing. Aluminum shall be ASTM B 209, Alloy 3003, 3105, or 5005.

2.1.5 Finishing Cement

Mineral fiber hydraulic-setting thermal insulating cement ASTM C 449.

2.1.6 Fibrous Glass Cloth and Glass Tape

Fibrous glass cloth and glass tape shall have flame spread and smoke developed ratings of no greater than 25/50 when measured in accordance with ASTM E 84. Fibrous glass cloth and tape; 20 by 20 maximum size mesh. Tape shall be 4 inch wide rolls. Class 3 tape shall be 4.5 ounces per square yard.

2.1.7 Staples

Outward clinching type monel.

2.1.8 Jackets

ASTM C 921, Type I, moisture vapor transmission maximum 0.02 perms, puncture resistance minimum 50 Beach units on all surfaces except concealed ductwork, where a minimum puncture resistance of 25 Beach units is allowable, tensile strength minimum 35 pounds/inch width; Type II, puncture resistance minimum 25 Beach units, tensile strength minimum 20 pounds/inch width. Aluminum jackets shall be corrugated, embossed or smooth sheet, 0.016 inch nominal thickness; ASTM B 209, Temper H14, Temper H16, Alloy 3003, 5005, or 3105 with factory applied moisture barrier. Corrugated aluminum jacket shall not be used outdoors. Aluminum jacket securing bands shall be Type 304 stainless steel, 0.015 inch thick, 1/2 inch wide for pipe under 12 inch diameter and 3/4 inch wide for pipe over 12 inch diameter. Aluminum jacket circumferential seam bands shall be 2 x 0.016 inch aluminum matching jacket material. The jacket may, at the option of the Contractor, be provided with a factory fabricated Pittsburg or "Z" type longitudinal joint. When the "Z" joint is used, the bands at the circumferential joints shall be designed by the manufacturer to seal the joints and hold the jacket in place. Polyvinyl chloride (PVC) jacket and fitting covers shall be made from rigid sheet with high impact strength, with minimum thickness 0.030 inches. Insulation under PVC jacket shall meet jacket manufacturer's written recommendations.

2.1.9 Vapor Barrier Coating

The vapor barrier coating shall be fire and water resistant and appropriately selected for either outdoor or indoor service. Color shall be white. The water vapor permeance of the compound shall not exceed 0.05 perm and shall be determined according to procedure B of ASTM E 96 utilizing apparatus described in ASTM E 96. The coating shall be a nonflammable, fire resistant type conforming to ASTM E 84, NFPA 90A, and UL 723. The flash point of the compound shall not be less than 80 degrees F and shall be determined in accordance with ASTM D 3278. All other application and service properties shall be in accordance with ASTM C 647.

2.1.10 Wire

Soft annealed ASTM A 580 Type 302, 304 or 316 stainless steel, 16 or 18 gauge.

2.2 PIPE INSULATION MATERIALS

Pipe insulation materials shall be as follows:

2.2.1 Aboveground Cold Pipeline

Insulation for minus 30 degrees F to plus 60 degrees F shall be as follows:

2.2.1.1 Mineral Fiber

ASTM C 547, Class 1 for use up to 450 degrees F and Class 2 for use up to 650 degrees F.

2.2.1.2 Cellular Glass

ASTM C 552, Type II, and Type III.

2.2.1.3 Flexible Cellular Insulation

ASTM C 534, Type I.

2.2.2 Aboveground Hot Pipeline

For aboveground hot pipeline (above 60 degrees F) insulation the following requirements shall be met.

2.2.2.1 Mineral Fiber

ASTM C 547, Class 1 or Class 2 as required for the operating temperature range.

2.2.2.2 Calcium Silicate

ASTM C 533, Type I indoor only, or outdoors above 250 degrees F pipe temperature.

2.2.2.3 Cellular Glass

ASTM C 552, Type II and Type III.

2.2.2.4 Flexible Cellular Insulation

ASTM C 534, Type I to 200 degrees F service.

2.3 DUCT INSULATION MATERIALS

Duct insulation materials shall be as follows:

2.3.1 Rigid Mineral Fiber

ASTM C 612, Class 1.

2.3.2 Flexible Mineral Fiber

ASTM C 553, Type I, Class B-2.

2.3.3 Cellular Glass

ASTM C 552, Type I.

2.4 EQUIPMENT INSULATION MATERIALS

Equipment insulation materials shall be as follows:

2.4.1 Cold Equipment Insulation

For temperatures below 60 degrees F.

2.4.1.1 Rigid Mineral Fiber

ASTM C 612, Class 1.

2.4.1.2 Flexible Mineral Fiber

ASTM C 553, Type I, Class B-4.

2.4.1.3 Cellular Glass

ASTM C 552, Type I, Type III, or Type IV as required.

2.4.1.4 Flexible Cellular Insulation

ASTM C 534, Type II.

2.4.2 Hot Equipment Insulation

For temperatures above 60 degrees F.

2.4.2.1 Rigid Mineral Fiber

ASTM C 612, Class 2, 3, 4 or 5 as required for temperature encountered to 1800 degrees F.

2.4.2.2 Flexible Mineral Fiber

ASTM C 553, Type I, Class B-4 to 400 degrees F.

2.4.2.3 Calcium Silicate

ASTM C 533, Type I, indoors only, or outdoors above 250 degrees F. Pipe shape may be used on diesel engine exhaust piping and mufflers to 1200 degrees F.

2.4.2.4 Cellular Glass

ASTM C 552, Type I, Type III, or Type IV as required.

2.4.2.5 Flexible Cellular Insulation

ASTM C 534, Type II to 200 degrees F.

3 EXECUTION

3.1 APPLICATION - GENERAL

3.1.1 Installation

Except as otherwise specified, material shall be installed in accordance with the manufacturer's written instructions. Insulation materials shall not be applied until tests specified in other sections of this specification are completed. Material such as rust, scale, dirt and moisture shall be removed from surfaces to receive insulation. Insulation shall be kept clean and dry. Insulation shall not be removed from its shipping containers until the day it is ready to use and shall be returned to like containers or equally protected from dirt and moisture at the end of each workday. Insulation that becomes dirty shall be thoroughly cleaned prior to use. If insulation becomes wet or if aforementioned cleaning does not restore the surfaces to like new condition, the insulation may be rejected, and if rejected, shall be immediately removed from the jobsite. Joints shall be staggered on multilayer insulation. Mineral fiber thermal insulating cement shall be mixed with demineralized water when used on stainless steel surfaces. Insulation, jacketing and accessories shall be installed in accordance with MICA-01 standard plates except where modified herein or on the drawings.

3.1.2 Firestopping

Where pipes and ducts pass through fire walls, fire partitions, above grade floors, and fire rated chase walls, the penetration shall be sealed with firestopping materials as specified in Section 07270 FIRESTOPPING.

3.1.3 Painting and Finishing

Painting shall be as specified in Section 09900 PAINTING, GENERAL.

3.1.4 Flexible Cellular Insulation

Flexible cellular insulation shall be installed with seams and joints sealed with a contact adhesive. Flexible cellular insulation shall not be used on surfaces greater than 200 degrees F. Insulation exposed to weather and not shown to have jacketing shall be protected with two coats of UV resistant finish as recommended by the manufacturer after the adhesive is dry.

3.1.5 Welding

No welding shall be done on piping, duct or equipment without written approval of the Contracting Officer. The capacitor discharge welding process may be used for securing metal fasteners to duct.

3.2 PIPE INSULATION INSTALLATION

3.2.1 Pipe Insulation

3.2.1.1 General

Pipe insulation shall be continuous and installed on fittings and appurtenances unless specified otherwise. Installation shall be with full length units of insulation and using a single cut piece to complete a run. Cut pieces or scraps abutting each other shall not be used. Pipe insulation shall be omitted on the following:

a. Pipe used solely for fire protection.

b. Chromium plated pipe to plumbing fixtures. However, fixtures for use by the physically handicapped shall have the hot water supply and drain, including the trap, insulated where exposed.

c. Sanitary drain lines.

d. Unions in pipe above 60 degrees F.

e. Strainers in pipe above 60 degrees F.

f. Check valves in pipe above 60 degrees F.

g. Air chambers.

3.2.1.2 Pipes Passing Through Sleeves

a. Pipe insulation shall be continuous through the sleeve .

b. An aluminum jacket with factory applied moisture barrier shall be provided over the insulation wherever penetrations require sealing.

c. Where penetrating interior walls, the aluminum jacket shall extend 2 inches beyond either side of the wall and shall be secured on each end with a band.

d. Where penetrating floors, the aluminum jacket shall extend from a point below the backup material to a point 10 inches above the floor with one band at the floor and one not more than 1 inch from the end of the aluminum jacket.

3.2.1.3 Pipes Passing Through Hangers

a. Insulation, whether hot or cold application, shall be continuous through hangers. All horizontal pipes 2 inches and smaller shall be supported on hangers with the addition of a Type 40 protection shield to protect the insulation in accordance with MSS SP-69. Whenever insulation shows signs of being compressed, or when the insulation or jacket shows visible signs of distortion at or near the support shield, insulation inserts as specified below for piping larger than 2 inches shall be installed.

b. Horizontal pipes larger than 2 inches at 60 degrees F and above shall be supported on hangers with the addition of a Type 39 saddle in accordance with MSS SP-69.

c. Horizontal pipes larger than 2 inches below 60 degrees F shall be supported on hangers with the addition of a Type 40 protection shield in accordance with MSS SP-69. An insulation insert of cellular glass or calcium silicate shall be installed above each shield. The insert shall cover not less than the bottom 180 degree arc of the pipe. Inserts shall be the same thickness as the insulation, and shall extend 2 inches on each end beyond the protection shield. When insulation inserts are required per the above, and the insulation thickness is less than 1 inch, wooden or cork dowels or blocks may be installed between the pipe and the shield to prevent the weight of the pipe from crushing the insulation as an option to installing insulation inserts. The insulation jacket shall be continuous over the wooden dowel, wooden block, or insulation insert.

d. Vertical pipes shall be supported with either Type 8 or Type 42 riser clamps with the addition of two Type 40 protection shields in accordance with MSS SP-69 covering the 360 degree arc of the insulation. An insulation insert of cellular glass or calcium silicate shall be installed between each shield and the pipe. The insert shall cover the 360 degree arc of the pipe. Inserts shall be the same thickness as the insulation, and shall extend 2 inches on each end beyond the protection shield. When insulation inserts are required per the above, and the insulation thickness is less than 1 inch, wooden or cork dowels or blocks may be installed between the pipe and the shield to prevent the hanger from crushing the insulation as an option instead of installing insulation inserts. The insulation jacket shall be continuous over the wooden dowel, wooden block, or insulation insert. The verticle weight of the pipe shall be supported with hangers located in a horizontal section of the pipe. When the pipe riser is longer than 30 feet, the weight of the pipe shall be additionally supported hangers in the vertical run of the pipe which are directly clamped to the pipe, penetrating the pipe insulation. These hangers shall be insulated and the insulation jacket sealed as indicated herein for anchors in a similar service.

e. Inserts shall be covered with a jacket material of the same appearance and quality as the adjoining pipe insulation jacket, shall overlap the adjoining pipe jacket 1-1/2 inches, and shall be sealed as required for the pipe jacket. The jacket material used to cover inserts in flexible cellular insulation shall conform to ASTM C 921, Type 1, and is allowed to be of a different material than the adjoining insulation material.

3.2.1.4 Pipes Passing Through Walls

a. For hot water pipes supplying lavatories or other similar heated service which requires insulation, the insulation shall be terminated on the backside of the finished wall. The insulation termination shall be protected with two coats of vapor barrier coating with a minimum total thickness of 1/16 inch applied with glass tape embedded between coats (if applicable). The coating

shall extend out onto the insulation 2 inches and shall seal the end of the insulation. Glass tape seams shall overlap 1 inch. Caulk the annular space between the pipe and wall penetration. Cover the pipe and wall penetration with a properly sized (well fitting) escutcheon plate. The escutcheon plate shall overlap the wall penetration at least 3/8 inch.

b. For domestic cold water pipes requiring insulation, the insulation shall be terminated on the finished side of the wall (i.e. insulation must cover the pipe throughout the wall penetration). The insulation shall be protected with two coats of vapor barrier coating with a minimum total thickness of 1/16 inch. The coating shall extend out onto the insulation 2 inches and shall seal the end of the insulation. Caulk the annular space between the pipe and wall penetration. Cover the pipe and wall penetration with a properly sized (well fitting) escutcheon plate. The escutcheon plate shall overlap the wall penetration by at least 3/8 inch.

3.2.1.5 Flexible Cellular Pipe Insulation

Flexible cellular pipe insulation shall be tubular form for pipe sizes 5 inches and less. Sweat fittings shall be insulated with miter-cut pieces the same size as on adjacent piping. Screwed fittings shall be insulated with sleeved fitting covers fabricated from miter-cut pieces and shall be overlapped and sealed to the adjacent pipe insulation.

3.2.2 Aboveground Cold Pipelines

The following shall be included for aboveground cold pipelines (minus 30 degrees F to plus 60 degrees F):

a. Domestic cold water.

b. Make-up water.

c. Chilled water.

3.2.3 Insulation Thickness

Thickness of insulation shall be as indicated in TABLE I.

TABLE I
Pipe Size (Inches)

Service or Range of Temp (degrees F)	Run-outs* 1/4 to 1-1/2	1/4 to 1-1/4	1-1/2 to 3	3-1/2 to 5	6 to 10	11 to 24	25 to 33
60 to 35 (FC)	1/2	1	1				
(CG)		1-1/2	1-1/2	2	2	2	2
(MF)		1	1	1-1/2	1-1/2	1-1/2	1-1/2
34 to 0 (CG)		2-1/2	2-1/2	2-1/2	3	3	3-1/2
(MF)		1-1/2	1-1/2	2	2	2-1/2	2-1/2

-1 to -30 (CG)	3	3	3	3-1/2	3-1/2	4
(MF)	1-1/2	2	2-1/2	2-1/2	3	3
Domestic (FC)	1/2	1/2	1/2			
Cold Water (CG)	1	1	1	1-1/2	1-1/2	1-1/2
and Interior (MF)	1/2	1/2	1/2	1	1	1
Roof Drain Lines (Horizontal portions only)						

NOTES:
CG - Cellular Glass
MF - Mineral Fiber
FC - Flexible Cellular

*When runouts to terminal units exceed 12 feet, the entire length of runout shall be insulated like the main feed pipe.

3.2.3.1 Jacket for Fibrous and Cellular Glass Insulated Pipe

Insulation shall be covered with a factory applied vapor barrier jacket or field applied seal welded PVC jacket. Insulation inside the building shown to be protected with an aluminum jacket shall have the insulation and vapor barrier jacket installed as specified herein. The aluminum jacket shall be installed as specified for piping exposed to weather, except sealing of the laps of the aluminum jacket is not required.

3.2.3.2 Insulation for Straight Runs (Fibrous and Cellular Glass)

a. Insulation shall be applied to the pipe with joints tightly butted. The ends of fibrous insulation shall be sealed off with vapor barrier coating at intervals not to exceed 15 feet.

b. Longitudinal laps of the jacket material shall overlap not less than 1-1/2 inches. Butt strips 3 inches wide shall be provided for circumferential joints.

c. Laps and butt strips shall be secured with adhesive and stapled on 4 inch centers if not factory self-sealing.

d. Factory self-sealing lap systems may be used when the ambient temperature is between 40 degrees F to 120 degrees F during installation. The lap system shall be installed in accordance with manufacturer's recommendations. Stapler shall be used only if specifically recommended by the manufacturer. Where gaps occur, the section shall be replaced or the gap repaired by applying adhesive under the lap and then stapling.

e. All Staples, including those used to repair factory self-seal lap systems, shall be coated with a vapor barrier coating. All seams, except those on factory self-seal systems shall be coated with vapor barrier coating.

f. Breaks and punctures in the jacket material shall be patched by wrapping a strip of jacket material around the pipe and securing it with adhesive, stapling, and coated with vapor barrier coating. The patch shall extend not less than 1-1/2 inches past the break.

g. At penetrations such as thermometers, the voids in the insulation shall be filled and sealed with vapor barrier coating.

3.2.3.3 Insulation for Fittings and Accessories

a. Pipe insulation shall have ends thoroughly coated with a vapor barrier coating not more than 6 inches from each flange, union, valve, anchor, or fitting in all directions.

b. Insulation may be premolded or segmented. Insulation of the same thickness and conductivity as the adjoining pipe insulation shall be used. If nesting size insulation is used, the insulation should be overlapped 2 inches or one pipe diameter. Loose fill mineral fiber or insulating cement shall be used to fill the voids. Insulation for elbows less than 3 inch size shall be premolded. Insulation for elbows 3 inch size and larger shall be either premolded or segmented. Elbows insulated using segments shall not have less than 3 segments per elbow. Insulation may be secured by wire or tape until finish is applied.

c. Upon completion of installation of insulation on flanges, unions, valves, anchors, fittings and accessories, terminations and insulation not protected by factory vapor barrier jackets or PVC fitting covers shall be protected with two coats of vapor barrier coating with a minimum total thickness of 1/16 inch, applied with glass tape embedded between coats. Tape seams shall overlap 1 inch. The coating shall extend out onto the adjoining pipe insulation 2 inches.

d. Anchors attached directly to the pipe shall be insulated for a sufficient distance to prevent condensation but not less than 6 inches from the insulation surface.

e. Flexible connections at pumps and other equipment shall be insulated with <<inch flexible cellular insulation, unless otherwise indicated.

f. Insulation shall be marked showing the location of unions, strainers, and check valves.

3.2.3.4 Optional PVC Fitting Covers

At the option of the Contractor, premolded, one or two piece PVC fitting covers may be used in lieu of the vapor barrier and embedded glass tape. Factory premolded insulation segments shall be used under the fitting covers for elbows. Insulation segments shall be the same thickness as adjoining pipe insulation and the insulation shall be protected with one coat of vapor barrier coating under the PVC cover. The covers shall be secured by PVC vapor barrier tape, adhesive, seal-welding or with tacks made for securing PVC covers. Seams in the cover, and tacks and laps to adjoining pipe insulation jacket, shall be sealed with vapor barrier tape to ensure that the assembly has a continuous vapor seal. Factory or fieldcut blanket insulation shall not be used on pipe below 60 degrees F.

3.2.4 Aboveground Hot Pipelines

For hot pipelines above 60 degrees F the following shall be included:

a. Domestic hot water and hot water circulation.

b. Hot water heating.

3.2.4.1 Insulation Thickness

Insulation thickness shall be determined using the manufacturer's published thermal conductivity k, and TABLE II. Insulation thickness for pipelines handling 60 degrees F to 200 degrees F domestic hot water shall be as indicated in TABLE IV.

TABLE II

REQUIRED THICKNESS (IN INCHES) OF PIPE INSULATION
FOR HANDLING STEAM TO 15 PSIG AND FLUIDS OTHER THAN
DOMESTIC HOT WATER TO 250 DEGREES F

k = thermal conductivity (average) Btu/hr. sq. ft. degree/in. thickness at a mean temperature of 75 degrees F

Thermal conductivity k	Pipe Size, Inches 2 or less	2-1/2 to 3	4	5 to 6	8	10	12
0.25	1.5	1.5	2.0	2.0	2.0	2.0	2.5
0.30	1.5	2.0	2.5	2.5	2.5	2.5	3.0
0.35	2.0	2.5	2.5	2.5	3.5	3.5	3.5
0.40	2.5	3.5	3.5	3.0	4.0	4.0	4.0
0.45	3.0	4.0	4.0	3.5	4.5	4.5	4.5

TABLE IV

REQUIRED THICKNESS (IN INCHES) OF PIPE INSULATION
FOR PIPES HANDLING DOMESTIC HOT WATER. MF - MINERAL FIBER
CG - CELLULAR GLASS FC - FLEXIBLE CELLULAR

Range of Service (degrees F)	Runouts* 1/4 to 1-1/2"	Pipe Size, Inches 2 or less	2-1/2 to 3	4	5 to 6	8	10	12
61 to 200 (MF)		1.0	1.5	1.5	1.5	1.5	1.5	1.5
(CG)		1.5	2.5	2.5	2.0	2.0	2.0	2.0
(FC)	1/2	1.0	1.5	1.5	1.5			

*When runouts to terminal units exceed 12 feet, the entire length of runout shall be insulated like the main feed pipe.

3.2.4.2 Jacket for Insulated Pipe

Insulation shall be covered with a factory applied Type II jacket or field applied aluminum where required or seal welded PVC.

3.2.4.3 Insulation for Straight Runs

a. Insulation shall be applied to the pipe with joints tightly butted.

b. Longitudinal laps of the jacket material shall overlap not less than 1-1/2 inch, and butt strips 3 inches wide shall be provided for circumferential joints.

c. Laps and butt strips shall be secured with adhesive and stapled on 4 inch centers if not factory self-sealing. Adhesive may be omitted where pipe is concealed.

d. Factory self-sealing lap systems may be used when the ambient temperature is between 40 degrees F and 120 degrees F and shall be installed in accordance with manufacturer's instructions. Laps and butt strips shall be stapled whenever there is nonadhesion of the system. Where gaps occur, the section shall be replaced or the gap repaired by applying adhesive under the lap and then stapling.

e. Breaks and punctures in the jacket material shall be patched by wrapping a strip of jacket material around the pipe and be secured with adhesive and stapled on 4 inch centers if not factory self-sealing. Adhesive may be omitted where pipe is concealed. Patch shall extend not less than 1-1/2 inches past the break.

3.2.4.4 Insulation for Fittings and Accessories

a. The run of the line pipe insulation shall have the ends brought up to the item.

b. Insulation of the same thickness and conductivity as the adjoining pipe insulation, either premolded or segmented, shall be placed around the item abutting the adjoining pipe insulation, or if nesting size insulation is used, overlapping 2 inches or one pipe diameter. Loose fill mineral fiber or insulating cement shall be used to fill the voids. Insulation for elbows less than 3 inches size shall be premolded. Insulation for elbows 3 inches size and larger shall be either premolded or segmented. Elbows insulated using segments shall have not less than 3 segments per elbow. Insulation may be wired or taped on until finish is applied.

c. Upon completion of installation of insulation on flanges, unions, valves, anchors, fittings and accessories, terminations and insulation not protected by factory vapor barrier jackets or PVC fitting covers shall be protected with two coats of Class 1 adhesive applied with glass tape embedded between coats. Tape seams shall overlap 1 inch. Adhesive shall extend onto the adjoining insulation not less than 2 inches. The total dry film thickness shall be not less than 1/16 inch.

d. Insulation terminations shall be tapered to unions at a 45-degree angle.

e. At the option of the Contractor, factory premolded one- or two-piece PVC fitting covers may be used in lieu of the adhesive and embedded glass tape. Factory premolded segments or factory or field cut blanket insert insulation segments shall be used under the cover and shall be the same thickness as adjoining pipe insulation. The covers shall be secured by PVC vapor barrier tape, adhesive, seal-welding or with tacks made for securing PVC covers.

3.2.5 Piping Exposed to Weather

Piping exposed to weather shall be insulated and jacketed as specified for the applicable service inside the building. After this procedure, an aluminum jacket shall be applied.

3.2.5.1 Aluminum Jacket

The jacket shall overlap not less than 2 inches at longitudinal and circumferential joints and shall be secured with bands at not more than 12 inch centers. Longitudinal joints shall be overlapped down to shed water and located at 4 or 8 o'clock positions. Joints on piping 60 degrees F and below shall be sealed with caulking while overlapping to prevent moisture penetration. Where jacketing on piping 60 degrees F and below abuts an uninsulated surface, joints shall be caulked to prevent moisture penetration. Joints on piping above 60 degrees F shall be sealed with a moisture barrier.

3.2.5.2 Insulation for Fittings

Flanges, unions, valves, fittings, and accessories shall be insulated and finished as specified for the applicable service. Two coats of an emulsion type weatherproof mastic recommended by the insulation manufacturer shall be applied with glass tape embedded between coats. Tape overlaps shall be not less than 1 inch and the adjoining aluminum jacket not less than 2 inches. Factory preformed aluminum jackets may be used in lieu of the above. Molded PVC fitting covers shall be used with PVC lagging and adhesive welded moisture tight.

3.2.5.3 PVC Lagging

PVC lagging shall be ultraviolet resistant and adhesive welded vapor tight with manufacturer's recommended adhesive. Installation shall include provision for thermal expansion.

3.3 DUCT INSULATION INSTALLATION

Corner angles shall be installed on external corners of insulation on ductwork in exposed finished spaces before covering with jacket. Duct insulation shall be omitted on the following:

a. Factory fabricated double wall internally insulated duct.

b. Site-erected air conditioning casings and plenums constructed of factory-insulated sheet metal panels.

c. Ducts shown to be internally lined with insulation or sound absorbing material, unless indicated otherwise.

d. Return ducts in ceiling spaces. Ceiling spaces shall be defined as those spaces between the ceiling and bottom of floor deck or roof deck inside the air conditioned space insulated envelope.

e. Factory preinsulated flexible ducts.

f. Exhaust air ducts unless noted.

g. Duct portions inside walls or floor-ceiling space in which both sides of the space are exposed to conditioned air and the space is not vented or exposed to unconditioned air.

3.3.1 Insulation and Vapor Barrier for Conditioned (Warm and Cold) Air Duct

Insulation and Vapor Barrier for Cold Air Duct (Below 60 degrees F:) Ducts and associated equipment shall be insulated to a thickness of 2 inches except fresh air intake ducts which shall be insulated 1-1/2 inches. The following shall be insulated:

a. Supply air ducts.

b. Fresh air intake ducts.

Insulation for rectangular ducts shall be flexible type where concealed, minimum density 3/4 pcf and rigid type where exposed, minimum density 3 pcf. Insulation for round ducts shall be flexible type, minimum density 3/4 pcf with a factory Type I jacket. Fibrous and cellular glass insulation for exposed ducts shall be provided with either a white, paintable, factory-applied Type I jacket or a vapor barrier jacket coating finish as specified. Fibrous and cellular glass insulation on concealed duct shall be provided with a factory-applied Type I vapor barrier jacket. Vapor barrier coating finish where indicated to be used shall be accomplished by applying two coats of vapor barrier coating with a layer of glass cloth embedded between the coats. The total dry film thickness shall be approximately 1/16 inch. Duct insulation shall be continuous through sleeves and prepared openings except fire wall penetrations. Duct insulation terminating at fire dampers, shall be continuous over the damper collar and retaining angle of fire dampers, which are exposed to unconditioned air and which may be prone to condensate formation. Duct insulation and vapor barrier shall cover the collar, neck, and any uninsulated surfaces of diffusers, registers and grills. Vapor barrier materials shall be applied to form a complete unbroken vapor seal over the insulation.

3.3.1.1 Installation on Concealed Duct

a. For rectangular, oval or round ducts, insulation shall be attached by applying Class 2 adhesive around the entire perimeter of the duct in 6 inch wide strips on 12 inch centers.

b. For rectangular and oval ducts, 24 inches and larger insulation shall be additionally secured to bottom of ducts by the use of mechanical fasteners. Fasteners shall be spaced on 18 inch centers and not more than 18 inches from duct corners.

c. For rectangular, oval and round ducts, mechanical fasteners shall be provided on sides of duct risers for all duct sizes. Fasteners

shall be spaced on 18 inch centers and not more than 18 inches from duct corners.

d. Insulation shall be impaled on the mechanical fasteners where used and shall be pressed thoroughly into the adhesive. Care shall be taken to ensure vapor barrier jacket joints overlap 2 inches. The insulation shall not be compressed to a thickness less than that specified. Insulation shall be carried over standing seams and trapeze-type duct hanger.

e. Self-locking washers shall be installed where mechanical fasteners are used. The pin shall be trimmed back and bent over.

f. Jacket overlaps shall be secured under the overlap with Class 2 adhesive and stapled on 4 inch centers. Staples and seams shall be coated with a brush coat of vapor barrier coating.

g. Breaks in the jacket material shall be covered with patches of the same material as the vapor barrier. The patches shall extend not less than 2 inches beyond the break or penetration in all directions and shall be secured with Class 2 adhesive and staples. Staples and joints shall be sealed with a brush coat of vapor barrier coating.

h. At jacket penetrations such as hangers thermometers and damper operating rods, voids in the insulation shall be filled and the penetration sealed with a brush coat of vapor barrier coating.

i. Insulation terminations and pin punctures shall be sealed and flashed with a reinforced vapor barrier coating finish. The coating shall overlap the adjoining insulation and uninsulated surface 2 inches. Pin puncture coatings shall extend 2 inches from the puncture in all directions.

j. Where insulation standoff brackets occur, insulation shall be extended under the bracket and the jacket terminated at the bracket.

3.3.1.2 Installation on Exposed Duct Work

a. For rectangular ducts, rigid insulation shall be secured to the duct by mechanical fasteners on all four sides of the duct, spaced not more than 12 inches apart and not more than 3 inches from the edges of the insulation joints. A minimum of two rows of fasteners shall be provided for each side of duct 12 inches and larger. One row shall be provided for each side of duct less than 12 inches.

b. Duct insulation shall be formed with minimum jacket seams. Each piece of rigid insulation shall be fastened to the duct using mechanical fasteners. Insulation shall be brought up to standing seams, reinforcing, and other vertical projections and shall not be carried over. Vapor barrier jacket shall be continuous across seams, reinforcing, and projections. When height of projections is greater than the insulation thickness, insulation and jacket shall be carried over.

c. Insulation shall be impaled on the fasteners; self-locking washers shall be installed and the pin trimmed and bent over.

d. Joints in the insulation jacket shall be sealed with a 4 inch wide strip of the same material as the vapor barrier jacket. The strip shall be secured with Class 2 adhesive and stapled. Staples and seams shall be sealed with a brush coat of vapor barrier coating.

e. Breaks and ribs or standing seam penetrations in the jacket material shall be covered with a patch of the same material as the jacket. Patches shall extend not less than 2 inches beyond the break or penetration and shall be secured with Class 2 adhesive and stapled. Staples and joints shall be sealed with a brush coat of vapor barrier coating.

f. At jacket penetrations such as hangers, thermometers, and damper operating rods, the voids in the insulation shall be filled and the penetrations sealed with a brush coat of vapor barrier coating.

g. Insulation terminations and pin punctures shall be sealed and flashed with a reinforced vapor barrier coating finish. The coating shall overlap the adjoining insulation and uninsulated surface 2 inches. Pin puncture coatings shall extend 2 inches from the puncture in all directions.

h. Oval and round ducts, flexible type, shall be insulated with factory Type I jacket insulation with minimum density of 12 kg per cubic meter attached by applying Class 2 adhesive around the entire perimeter of the duct in 6 inches wide stripe on 12 inch centers.

3.3.2 Ducts Handling Air for Dual Purpose

For air handling ducts for dual purpose (below and above 60 degrees F), ducts shall be insulated as specified for cold air duct.

3.3.3 Duct Test Holes

After duct systems have been tested, adjusted, and balanced, breaks in the insulation and jacket shall be repaired in accordance with the applicable section of this specification for the type of duct insulation to be repaired.

3.4 EQUIPMENT INSULATION INSTALLATION

3.4.1 General

Removable insulation sections shall be provided to cover parts of equipment which must be opened periodically for maintenance including vessel covers, fasteners, flanges and accessories. Equipment insulation shall be omitted on the following:

a. Handholes.

b. Cleanouts.

c. ASME stamps.

d. Manufacturer's nameplates.

3.4.2 Insulation for Cold Equipment

Cold equipment below 60 degrees F: Insulation shall be furnished on equipment handling media below 60 degrees F including the following:

a. Drip pans under chilled equipment.

b. Chilled water pumps.

c. Air handling equipment parts that are not factory insulated.

d. Expansion and air separation tanks.

3.4.2.1 Insulation Type

Insulation shall be suitable for the temperature encountered. Thicknesses shall be as follows:

a. Equipment Handling Media Between 35 and 60 degrees F: 1-1/2 inch thick mineral fiber, 2 inch thick cellular glass, or 1-1/2 inch thick flexible cellular.

b. Equipment Handling Media Between 0 degrees F and 34 degrees F: 2-1/2 inch thick mineral fiber, 3-1/2 inch thick cellular glass, or 2-1/2 inch flexible cellular.

c. Equipment Handling Media Between Minus 30 degrees F and 0 degrees F: 3 inch thick mineral fiber, 4 inch thick cellular glass or 3 inch thick flexible cellular.

3.4.2.2 Pump Insulation

a. Pumps shall be insulated by forming a box around the pump housing. The box shall be constructed by forming the bottom and sides using joints which do not leave raw ends of insulation exposed. Joints between sides and between sides and bottom shall be joined by adhesive with lap strips for rigid mineral fiber and contact adhesive for flexible cellular insulation. The box shall conform to the requirements of MICA-01 plate No. 49 when using flexible cellular insulation. Joints between top cover and sides shall fit tightly forming a female shiplap joint on the side pieces and a male joint on the top cover, thus making the top cover removable.

b. Exposed insulation corners shall be protected with corner angles.

c. Upon completion of installation of the insulation, including removable sections, two coats of vapor barrier coating shall be applied with a layer of glass cloth embedded between the coats. The total dry thickness of the finish shall be 1/16 inch. A parting line shall be provided between the box and the removable sections allowing the removable sections to be removed without disturbing the insulation coating. Caulking shall be applied to parting line, between equipment and removable section insulation, and at all penetrations.

3.4.2.3 Other Equipment

a. Insulation shall be formed or fabricated to fit the equipment. To ensure a tight fit on round equipment, edges shall be beveled and joints shall be tightly butted and staggered.

b. Insulation shall be secured in place with bands or wires at intervals as recommended by the manufacturer but not more than 300 mm centers except flexible cellular which shall be adhered. Insulation corners shall be protected under wires and bands with suitable corner angles.

c. Cellular glass insulation shall be set in a coating of bedding compound, and joints shall be sealed with bedding compound as recommended by the manufacturer. Mineral fiber insulation joints shall be filled with finishing cement.

d. Insulation on heads of heat exchangers shall be removable. Removable section joints shall be fabricated using a male-female shiplap type joint. The entire surface of the removable section shall be finished by applying two coats of vapor barrier coating with a layer of glass cloth embedded between the coats. The total dry thickness of the finish shall be 1/16 inch.

e. Exposed insulation corners shall be protected with corner angles.

f. Insulation on equipment with ribs shall be applied over 6 x 6 inches by 12 gauge welded wire fabric which has been cinched in place, or if approved by the Contracting Officer, spot welded to the equipment over the ribs. Insulation shall be secured to the fabric with J-hooks and 2 x 2 inches washers or shall be securely banded or wired in place on 12 inch centers.

3.4.2.4 Vapor Barrier

Upon completion of installation of insulation, penetrations shall be caulked. Two coats of vapor barrier coating shall be applied over insulation, including removable sections, with a layer of glass cloth embedded between the coats. The total dry thickness of the finish shall be 1/16 inch. Caulking shall be applied to parting line between equipment and removable section insulation.

3.4.3 Insulation for Hot Equipment

Hot equipment above 60 degrees F: Insulation shall be furnished on equipment handling media above 60 degrees F including the following:

a. Pumps handling media above 130 degrees F.

b. Air separation and expansion tanks.

c. Unjacketed boilers or parts of boilers.

d. Boiler flue gas connection from boiler to stack (if inside).

3.4.3.1 Insulation

Insulation shall be suitable for the temperature encountered. Insulation thicknesses shall be 52 inches.

3.4.3.2 Insulation of Pumps

Pumps shall be insulated by forming a box around the pump housing. The box shall be constructed by forming the bottom and sides using joints which do not leave raw ends of insulation exposed. Bottom and sides shall be banded to form a rigid housing which does not rest on the pump. Joints between top cover and sides shall fit tightly. The top cover shall have a joint forming a female shiplap joint on the side pieces and a male joint on the top cover, thus making the top cover removable. Two coats of Class I adhesive shall be applied over insulation, including removable sections, with a layer of glass cloth embedded between the coats. A parting line shall be provided between the box and the removable sections allowing the removable sections to be removed without disturbing the insulation coating. The total dry thickness of the finish shall be 1/16 inch. Caulking shall be applied to parting line of the removable sections and penetrations.

3.4.3.3 Other Equipment

a. Insulation shall be formed or fabricated to fit the equipment. To ensure a tight fit on round equipment, edges shall be beveled and joints shall be tightly butted and staggered.

b. Insulation shall be secured in place with bands or wires at intervals as recommended by the manufacturer but not greater than 300 mm centers except flexible cellular which shall be adhered. Insulation corners shall be protected under wires and bands with suitable corner angles.

c. Cellular glass insulation shall be set in a coating of bedding compound as recommended by the manufacturer, and joints shall be sealed with bedding compound. Mineral fiber joints shall be filled with finishing cement.

d. Insulation on heads of heat exchangers shall be removable. The removable section joint shall be fabricated using a male-female shiplap type joint. Entire surface of the removable section shall be finished as specified.

e. Exposed insulation corners shall be protected with corner angles.

f. On equipment with ribs such as boiler flue gas connection, draft fans, and fly ash or soot collectors, insulation shall be applied over 6 x 6 inches by 12 gauge welded wire fabric which has been cinched in place, or if approved by the Contracting Officer, spot welded to the equipment over the ribs. Insulation shall be secured to the fabric with J-hooks and 2 x 2 inch washers or shall be securely banded or wired in place on 12 inch (maximum) centers.

g. On equipment handling media above 600 degrees F, insulation shall be applied in two or more layers with joints staggered.

h. Upon completion of installation of insulation, penetrations shall be caulked. Two coats of Class I adhesive shall be applied over insulation, including removable sections, with a layer of glass cloth embedded between the coats. The total dry thickness of the finish shall be 1/16 inch. Caulking shall be applied to parting line between equipment and removable section insulation.

END OF SECTION

SECTION 15330

WET PIPE SPRINKLER SYSTEM, FIRE PROTECTION

1 GENERAL

1.1 REFERENCES

The publications listed below form a part of this specification to the extent referenced. The publications are referred to in the text by basic designation only.

AMERICAN SOCIETY FOR TESTING AND MATERIALS (ASTM)

ASTM A 47	(1990) Ferritic Malleable Iron Castings
ASTM A 53	(1993a) Pipe, Steel, Black and Hot-Dipped, Zinc-Coated Welded and Seamless
ASTM A 135	(1993) Electric-Resistance-Welded Steel Pipe
ASTM A 183	(1983; R 1990) Carbon Steel Tract Bolts and Nuts
ASTM A 536	(1984; R 1993) Ductile Iron Castings
ASTM A 795	(1993) Black and Hot-Dipped Zinc-Coated (Galvanized) Welded and Seamless Steel Pipe for Fire Protection Use
ASTM B 88	(1993a) Seamless Copper Water Tube
ASTM D 3309	(1993) Polybutylene (PB) Plastic Hot- and Cold-Water Distribution Systems
ASTM F 442	(1993) Chlorinated Poly(Vinyl Chloride) (CPVC) Plastic Pipe (SDR-PR)

AMERICAN SOCIETY OF MECHANICAL ENGINEERS (ASME)

ASME B16.1	(1989) Cast Iron Pipe Flanges and Flanged Fittings
ASME B16.3	(1992) Malleable Iron Threaded Fittings
ASME B16.4	(1992) Cast Iron Threaded Fittings
ASME B16.9	(1993) Factory-Made Wrought Steel Buttwelding Fittings
ASME B16.11	(1991) Forged Fittings, Socket-Welding and Threaded
ASME B16.18	(1984) Cast Copper Alloy Solder Joint Pressure Fittings

ASME B16.21	(1992) Nonmetallic Flat Gaskets for Pipe Flanges
ASME B16.22	(1989) Wrought Copper and Copper Alloy Solder Joint Pressure Fittings
ASME B18.2.1	(1981; Supple 1991; R 1992) Square and Hex Bolts and Screws (Inch Series)
ASME B18.2.2	(1987; R 1993) Square and Hex Nuts (Inch Series)

AMERICAN SOCIETY OF SANITARY ENGINEERING (ASSE)

ASSE 1013	(1993) Reduced Pressure Principle Backflow Preventers
ASSE 1015	(1993) Double Check Backflow Prevention Assembly

AMERICAN WATER WORKS ASSOCIATION (AWWA)

AWWA-01	(1992) Standard Methods for the Examination of Water and Wastewater
AWWA B300	(1992) Hypochlorites
AWWA B301	(1992) Liquid Chlorine
AWWA C104	(1990) Cement-Mortar Lining for Ductile-Iron Pipe and Fittings for Water
AWWA C110	(1993) Ductile-Iron and Gray-Iron Fittings, 3 In. through 48 In. (75 mm through 1200 mm), for Water and Other Liquids
AWWA C111	(1990) Rubber-Gasket Joints for Ductile-Iron Pressure Pipe and Fittings
AWWA C151	(1991) Ductile-Iron Pipe, Centrifugally Cast, for Water or Other Liquids
AWWA C203	(1991) Coal-tar Protective Coatings and Linings for Steel Water Pipelines - Enamel and Tape - Hot-Applied
AWWA M20	(1973) Manual: Water Chlorination Principles and Practices

FACTORY MUTUAL ENGINEERING AND RESEARCH (FM)

FM P7825	(1994; Supple I, II & III) Approval Guide

MILITARY SPECIFICATIONS (MIL)

MIL-HDBK-1008B	(1994) Fire Protection for Facilities Engineering, Design and Construction

MANUFACTURERS STANDARDIZATION SOCIETY OF THE VALVE AND FITTINGS INDUSTRY (MSS)

MSS SP-71	(1990) Cast Iron Swing Check Valves, Flanges and Threaded Ends

NATIONAL FIRE PROTECTION ASSOCIATION (NFPA)

NFPA 13	(1994) Installation of Sprinkler Systems
NFPA 13R	(1994) Installation of Sprinkler Systems in Residential Occupancies Up to and Including Four Stories in Height
NFPA 24	(1992) Installation of Private Fire Service Mains and Their Appurtenances
NFPA 231C	(1991) Rack Storage of Materials
NFPA 1963	(1993) Fire Hose Connections

NATIONAL INSTITUE FOR CERTIFICATION IN ENGINEERING TECHNOLOGIES (NICET)

NICET 1014	(1992) Detail Manual for Certification in the Field of Fire Protection Engineering Technology (Field 003) Automatic Sprinkler System Layout

UNDERWRITERS LABORATORIES (UL)

UL-01	(1994; Supple) Building Materials Directory
UL-04	(1994; Supple) Fire Protection Equipment Directory
UL 668	(1989) Hose Valves For Fire Protection Service

1.2 GENERAL REQUIREMENTS

Wet pipe sprinkler system shall be provided in all areas of the building, including above suspended ceilings. The sprinkler system shall provide fire sprinkler protection for the entire area. Except as modified herein, the system shall be designed and installed in accordance with NFPA 13 and MIL-HDBK-1008B. In areas where MIL-HDBK-1008B and NFPA 13 provide conflicting information, MIL-HDBK-1008B shall govern. Pipe sizes which are not indicated on drawings shall be determined by hydraulic calculation.

1.2.1 Hydraulic Design

The system shall be hydraulically designed to discharge a minimum density of 0.010 gpm per square foot over the hydraulically most demanding 3000 square feet of floor area. The minimum pipe size for branch lines in gridded systems shall be 1-1/2 inch. Hydraulic calculations shall be in accordance with the Area/Density Method of NFPA 13.

1.2.1.1 Hose Demand

An allowance for exterior hose streams of 250 gpm shall be added to the sprinkler system demand at the fire hydrant shown on the drawings closest to the point where the water service enters the building.

1.2.1.2 Basis for Calculations

The design of the system shall be based upon a water supply with a static pressure of 60 psig, and a flow of 1400 gpm at a residual pressure of 32.5 psig measured at a point 5 feet from the building. Water supply shall be presumed available at 5 feet from the building. Hydraulic calculations shall be based upon the Hazen-Williams formula with a "C" value of 120 for steel piping and 100 for existing underground piping.

1.2.2 Sprinkler Spacing

Sprinklers shall be uniformly spaced on branch lines. Maximum spacing per sprinkler shall not exceed limits specified in NFPA 13 for light hazard occupancy.

1.3 SUBMITTALS

Government approval is required for submittals with a "GA" designation; submittals having an "FIO" designation are for information only. Submittals related to system configuration, hydraulic calculations, and equipment selection, including manufacturer's catalog data, working drawings, connection drawings, control diagrams and certificates shall be submitted concurrently as a complete package. The package will be reviewed by the U.S. Army Engineer District Fire Protection Engineer. The following shall be submitted in accordance with Section 01330 SUBMITTAL PROCEDURES:

SD-01 Data

Sprinkler System Equipment; FIO.

Manufacturer's Catalog Data for each separate piece of equipment proposed for use in the system. Data shall indicate the name of the manufacturer of each item of equipment, with data highlighted to indicate model, size, options, etc. proposed for installation. In addition, a complete equipment list which includes equipment description, model number and quantity shall be provided.

Hydraulic Calculations; GA.

Hydraulic calculations, including a drawing showing hydraulic reference points and pipe segments.

Spare Parts; FIO.

Spare parts data shall be included for each different item of material and equipment specified. The data shall include a complete list of parts and supplies, with current unit prices and source of supply, and a list of parts recommended by the manufacturer to be replaced after 1 year and 3 years of service. A list of special tools and test equipment required for

maintenance and testing of the products supplied by the Contractor shall be included.

SD-04 Drawings

Sprinkler System Shop Drawings; GA.

Detail drawings conforming to the requirements established for working plans as prescribed in NFPA 13. Drawings shall include plan and elevation views which establish that the equipment will fit the allotted spaces with clearance for installation and maintenance. Each set of drawings shall include the following:

a. Descriptive index of drawings in the submittal with drawings listed in sequence by drawing number. A legend identifying device symbols, nomenclature, and conventions used.

b. Floor plans drawn to a scale not less than 1:100 which clearly show locations of sprinklers, risers, pipe hangers, seismic separation assemblies, sway bracing, inspector's test connections, drains, and other applicable details necessary to clearly describe the proposed arrangement. Each type of fitting used and the locations of bushings, reducing couplings, and welded joints shall be indicated.

c. Actual center-to-center dimensions between sprinklers on branch lines and between branch lines; from end sprinklers to adjacent walls; from walls to branch lines; from sprinkler feed mains, cross-mains and branch lines to finished floor and roof or ceiling. A detail shall show the dimension from the sprinkler and sprinkler deflector to the ceiling in finished areas.

d. Longitudinal and transverse building sections showing typical branch line and cross-main pipe routing as well as elevation of each typical sprinkler above finished floor.

e. Details of each type of riser assembly; pipe hanger; sway bracing for earthquake protection, and restraint of underground water main at point-of-entry into the building, and electrical devices and interconnecting wiring.

As-Built Drawings; FIO.

As-built drawings, no later than 14 working days after completion of the Final Tests. The sprinkler system shop drawings shall be updated to reflect as-built conditions after work is completed and shall be on reproducible full-size mylar film.

SD-06 Instructions

Test Procedures; FIO.

Proposed test procedures for piping hydrostatic test, testing of alarms, at least 14 days prior to the start of related testing.

SD-07 Schedules

Preliminary Tests; FIO.

A schedule of preliminary tests, at least 14 days prior to the proposed start of the tests.

Final Test; FIO.

Upon successful completion of tests specified under PRELIMINARY TESTS, written notification shall be given to the Contracting Officer of the date for the final acceptance test. Notification shall be provided at least 14 days prior to the proposed start of the test. Notification shall include a copy of the Contractor's Material & Test Certificates.

SD-08 Statements

Installer Qualifications; FIO.

Qualifications of the sprinkler installer.

Submittal Preparer's Qualifications; FIO.

The name and documentation of certification of the individual who will prepare the submittals, prior to the submittal of the drawings and hydraulic calculations.

SD-13 Certificates

Contractor's Material & Test Certificates; FIO.

Certificates, as specified in NFPA 13, shall be completed and signed by the Contractor's Representative performing required tests for both underground and aboveground piping.

SD-19 Operation and Maintenance Manuals

Sprinkler System; FIO.

Manuals shall be in loose-leaf binder format and grouped by technical sections consisting of manufacturer's standard brochures, schematics, printed instructions, general operating procedures, and safety precautions. The manuals shall list routine maintenance procedures possible breakdowns, and repairs, and troubleshooting guide. This shall include procedures and instructions pertaining to frequency of preventive maintenance, inspection, adjustment, lubrication and cleaning necessary to minimize corrective maintenance and repair.

1.4 HYDRAULIC CALCULATIONS

Hydraulic calculations shall be as outlined in NFPA 13 except that calculations shall be performed by computer using software specifically designed for fire protection system design. Software which uses k-factors for typical branch lines is not acceptable. Calculations shall be taken back to the water supply source unless water supply data is otherwise indicated. Calculations shall substantiate that the design area indicated is the hydraulically most demanding. Water supply curves and system requirements shall be plotted on semi-logarithmic graph paper so as to present a summary of the complete hydraulic calculation. A summary sheet listing sprinklers in the design area and their respective hydraulic

reference points, elevations, actual discharge pressures and actual flows shall be provided. Elevations of hydraulic reference points (nodes) shall be indicated. Documentation shall identify each pipe individually and the nodes connected thereto. The diameter, length, flow, velocity, friction loss, number and type fittings, total friction loss in the pipe, equivalent pipe length and Hazen-Williams coefficient shall be indicated for each pipe. For gridded systems, calculations shall show peaking of demand area friction loss to verify that the hydraulically most demanding area is being used. Also for gridded systems, a flow diagram indicating the quantity and direction of flows shall be included. A drawing showing hydraulic reference points (nodes) and pipe designations used in the calculations shall be included and shall be independent of shop drawings.

1.5 SUBMITTAL PREPARER'S QUALIFICATIONS

The sprinkler system submittals, including as-built drawings, shall be prepared by an individual who is either a registered professional engineer or who is certified as a Level III Technician by National Institute for Certification in Engineering Technologies (NICET) in the Automatic Sprinkler System Layout subfield of Fire Protection Engineering Technology in accordance with NICET 1014.

1.6 INSTALLER QUALIFICATIONS

The installer shall be experienced and regularly engaged in the installation of the type and complexity of system included in this project. A statement prior to submittal of any other data or drawings, that the proposed sprinkler system installer is regularly engaged in the installation of the type and complexity of system included in this project shall be provided. In addition, data identifying the location of at least three systems recently installed by the proposed installer which are comparable to the system specified shall be submitted. Contractor shall certify that each system has performed satisfactorily, in the manner intended, for a period of not less than 6 months.

1.7 REGULATORY REQUIREMENTS

Compliance with referenced NFPA standards is mandatory. This includes advisory provisions listed in the appendices of such standards, as though the word "shall" had been substituted for the word "should" wherever it appears. Applicable material and installation standards referenced in Appendix A of NFPA 13 and NFPA 24 shall be considered mandatory the same as if such referenced standards were specifically listed in this specification. In the event of a conflict between specific provisions of this specification and applicable NFPA standards, this specification shall govern. All requirements that exceed the minimum requirements of NFPA 13 shall be incorporated into the design. Reference to "authority having jurisdiction" shall be interpreted to mean the Contracting Officer.

1.8 DELIVERY AND STORAGE

Equipment placed in storage shall be stored with protection from the weather, humidity and temperature variations, dirt and dust or other contaminants.

2 PRODUCTS

2.1 GENERAL EQUIPMENT REQUIREMENTS

2.1.1 Standard Products

Materials and equipment shall be standard products of a manufacturer regularly engaged in the manufacture of such products and shall essentially duplicate items that have been in satisfactory use for at least 2 years prior to bid opening.

2.1.2 Requirements for Fire Protection Service

Equipment and materials shall have been tested by Underwriters Laboratories, Inc. and listed in UL-04 or approved by Factory Mutual and listed in FM P7825. Where the terms "listed" or "approved" appear in this specification, such shall mean listed in UL-04 or FM P7825.

2.1.3 Nameplates

Major components of equipment shall have the manufacturer's name, address, type or style, model or serial number, and catalog number on a plate permanently affixed to the item of equipment.

2.2 UNDERGROUND PIPING SYSTEMS

2.2.1 Pipe

Piping from a point 6 inches above the floor to a point 5 feet outside the building wall shall be ductile iron with a rated working pressure of 150 psi conforming to AWWA C151, with cement mortar lining conforming to AWWA C104. Piping more than 5 feet outside the building walls shall comply with Section 02660 WATER LINES.

2.2.2 Fittings and Gaskets

Fittings shall be ductile iron conforming to AWWA C110. Gaskets shall be suitable in design and size for the pipe with which such gaskets are to be used. Gaskets for ductile iron pipe joints shall conform to AWWA C111.

2.3 ABOVEGROUND PIPING SYSTEMS

Aboveground piping shall be steel.

2.3.1 Steel Piping System

2.3.1.1 Steel Pipe

Except as modified herein, steel pipe shall be black as permitted by NFPA 13and shall conform to applicable provisions of ASTM A 795, ASTM A 53, or ASTM A 135. Pipe in which threads or grooves are cut shall be Schedule 40. Pipe shall be marked with the name of the manufacturer, kind of pipe, and ASTM designation.

2.3.1.2 Fittings for Non-Grooved Steel Pipe

Fittings shall be cast iron conforming to ASME B16.4, steel conforming to ASME B16.9 or ASME B16.11, or malleable iron conforming to ASME B16.3. Steel press fittings shall be approved for fire protection systems. Fittings into which sprinklers, drop nipples or riser nipples (sprigs) are screwed shall be threaded type. Plain-end fittings with mechanical couplings, fittings which use steel gripping devices to bite into the pipe and segmented welded fittings shall not be used.

2.3.1.3 Grooved Mechanical Joints and Fittings

Joints and fittings shall be designed for not less than 175 psi service and shall be the product of the same manufacturer. Fitting and coupling houses shall be malleable iron conforming to ASTM A 47, Grade 32510; ductile iron conforming to ASTM A 536, Grade 65-45-12. Gasket shall be the flush type that fills the entire cavity between the fitting and the pipe. Nuts and bolts shall be heat-treated steel conforming to ASTM A 183 and shall be cadmium plated or zinc electroplated.

2.3.1.4 Flanges

Flanges shall conform to NFPA 13 and ASME B16.1. Gaskets shall be non-asbestos compressed material in accordance with ASME B16.21, 1/16 inch thick, and full face or self-centering flat ring type. Bolts shall be squarehead conforming to ASME B18.2.1 and nuts shall be hexagon type conforming to ASME B18.2.2.

2.3.2 Pipe Hangers

Hangers shall be listed in UL-04 or FM P7825 and of the type suitable for the application, construction, and pipe type and sized involved.

2.3.3 Valves

2.3.3.1 Control Valve and Gate Valve

Manually operated sprinkler control valve and gate valve shall be outside stem and yoke (OS&Y) type and shall be listed in UL-01 or FM P7825.

2.3.3.2 Check Valve

Check valve 2 inches and larger shall be listed in UL-01 or FM P7825. Check valves 4 inches and larger shall be of the swing type with flanged cast iron body and flanged inspection plates, shall have a clear waterway and shall meet the requirements of MSS SP-71, for Type 3 or 4.

2.4 ALARM CHECK VALVE ASSEMBLY

Assembly shall include an alarm check valve, standard trim piping, pressure gauges, bypass, retarding chamber, testing valves, main drain, and other components as required for a fully operational system.

2.5 WATER MOTOR ALARM ASSEMBLY

Assembly shall include a body housing, impeller or pelton wheel, drive shaft, striker assembly, gong, wall plate and related components necessary

for complete operation. Minimum 3/4 inch galvanized piping shall be provided between the housing and the alarm check valve. Drain piping from the body housing shall be minimum 1 inch galvanized and shall be arranged to drain to the outside of the building. Piping shall be galvanized both on the inside and outside surfaces.

2.6 ALARM INITIATING AND SUPERVISORY DEVICES

2.6.1 Sprinkler Waterflow Indicator Switch, Vane Type

Switch shall be vane type with a pipe saddle and cast aluminum housing. The electro-mechanical device shall include a flexible, low-density polyethylene paddle conforming to the inside diameter of the fire protection pipe. The device shall sense water movements and be capable of detecting a sustained flow of 10 gpm or greater. The device shall contain a retard device adjustable from 0 to 90 seconds to reduce the possibility of false alarms caused by transient flow surges. The switch shall include two SPDT (Form C) contacts, and shall be equipped with a silicone rubber gasket to assure positive water seal and a dustproof cover and gasket to seal the mechanism from dirt and moisture.

2.6.2 Valve Supervisory (Tamper) Switch

Switch shall be suitable for mounting to the type of control valve to be supervised open. The switch shall be tamper resistant and contain one set of SPDT (Form C) contacts arranged to transfer upon removal of the housing cover or closure of the valve of more than two rotations of the valve stem.

2.6.3 Sprinkler Pressure (Waterflow) Alarm Switch

Pressure switch shall include a metal housing with a neoprene diaphragm, SPDT snap action switches and a 1/2 inch NPT male pipe thread. The switch shall have a maximum service pressure rating of 175 psi. There shall be two SPDT (Form C) contacts factory adjusted to operate at 4 to 8 psi. The switch shall be capable of being mounted in any position in the alarm line trim piping of the alarm check valve.

2.7 FIRE DEPARTMENT CONNECTION

Fire department connection shall be flush type with cast brass body, matching wall escutcheon lettered "Auto Spkr" with a chromium plated finish. The connection shall have two inlets with individual self-closing clappers, caps with drip drains and chains. Female inlets shall have 65 mm diameter American National Fire Hose Connection Screw Threads (NH) per NFPA 1963.

2.8 WALL INDICATOR VALVE

Two way adjustable with valve position indicator clearly visible from outside building.

2.9 SPRINKLERS

Sprinklers shall be used in accordance with their listed spacing limitations. Temperature classification shall be ordinary. Sprinklers in high heat areas including attic spaces or in close proximity to unit heaters shall have temperature classification in accordance with NFPA 13.

2.9.1 Upright Sprinkler

Upright sprinkler shall be white enamel and shall have a nominal 1/2 inch or 17/32 inch orifice.

2.9.2 Pendent Sprinkler

Pendent sprinkler shall be of the fusible strut or glass bulb type, semi-recessed type with nominal 1/2 inch to 17/32 inch orifice. Pendent sprinklers shall have a white enamel finish.

2.9.3 Sidewall Sprinkler

Sidewall sprinkler shall have a nominal 1/2 inch orifice. Sidewall sprinkler shall have a white enamel finish. Sidewall sprinkler shall be the quick-response type.

2.10 DISINFECTING MATERIALS

2.10.1 Liquid Chlorine

Liquid chlorine shall conform to AWWA B301.

2.10.2 Hypochlorites

Calcium hypochlorite and sodium hypochlorite shall conform to AWWA B300.

2.11 ACCESSORIES

2.11.1 Sprinkler Cabinet

Spare sprinklers shall be provided in accordance with NFPA 13 and shall be packed in a suitable metal or plastic cabinet. Spare sprinklers shall be representative of, and in proportion to, the number of each type and temperature rating of the sprinklers installed. At least one wrench of each type required shall be provided.

2.11.2 Pendent Sprinkler Escutcheon

Escutcheon shall be one-piece metallic type with a depth of less than 3/4 inch and suitable for installation on pendent sprinklers. The escutcheon shall have a factory finish that matches the pendent sprinkler heads.

2.11.3 Pipe Escutcheon

Escutcheon shall be polished chromium-plated zinc alloy, or polished chromium-plated copper alloy. Escutcheons shall be either one-piece or split-pattern, held in place by internal spring tension or set screw.

2.11.4 Sprinkler Guard

Guard shall be a steel wire cage designed to encase the sprinkler and protect it from mechanical damage. Guards shall be provided on sprinklers located within 7 feet of catwalk and in mechanical room.

2.11.5 Identification Sign

Valve identification sign shall be minimum 6 inches wide x 6 inches high with enamel baked finish on minimum 18 gauge steel or 0.024 inch aluminum with red letters on a white background or white letters on red background. Wording of sign shall include, but not be limited to "main drain," "auxiliary drain," "inspector's test," "alarm test," "alarm line," and similar wording as required to identify operational components.

2.12 REDUCED PRESSURE BACKFLOW PREVENTION ASSEMBLY

Reduce pressure backflow prevention assembly shall be UL listed for fire protection service. The assembly shall have a bronze, cast-iron or stainless steel body with flanged ends. The assembly shall include OS&Y shutoff valves on the inlet and outlet, 2-positive-seating check valve for continuous pressure application, and four test cocks. Assemblies shall be rated for working pressure of 175 psi. The maximum pressure loss shall be 6 psi at a flow rate equal to the sprinkler water demand, at the location of the assembly.

3 EXECUTION

3.1 INSTALLATION REQUIREMENTS

The installation shall be in accordance with the applicable provisions of NFPA 13, NFPA 24 and publications referenced therein. Installation of in-rack sprinklers shall comply with applicable provisions of NFPA 231C.

3.2 ABOVEGROUND PIPING INSTALLATION

Piping shall be run straight and bear evenly on hangers and supports.

3.2.1 Protection of Piping Against Earthquake Damage

The system piping shall be protected against damage from earthquakes. Seismic protection of the piping system shall be provided in accordance with NFPA 13 and Appendix A, with the exception that the "Earthquake Zones" map of Appendix A shall not apply to this project. Seismic protection shall include flexible couplings, sway bracing, seismic separation assemblies where piping crosses building seismic separation joints, and other features as required in NFPA 13 for protection of piping against damage from earthquakes. Branch lines shall be equipped with sway braces at the end sprinkler head and at intervals not exceeding 30 feet.

3.2.2 Piping in Exposed Areas

Exposed piping shall be installed so as not to diminish exit access widths, corridors or equipment access. Exposed horizontal piping, including drain piping, shall be installed to provide maximum headroom.

3.2.3 Piping in Finished Areas

In areas with suspended or dropped ceilings and in areas with concealed spaces above the ceiling, piping shall be concealed above ceilings. Piping shall be inspected, tested and approved before being concealed. Risers and similar vertical runs of piping in finished areas shall be concealed.

3.2.4 Pendent Sprinklers

Drop nipples to pendent sprinklers shall consist of minimum 1 inch pipe with a reducing coupling into which the sprinkler shall be threaded. Hangers shall be provided on arm-overs to drop nipples supplying pendent sprinklers when the arm-over exceeds 12 inches. Where sprinklers are installed below suspended or dropped ceilings, drop nipples shall be cut such that sprinkler ceiling plates or escutcheons are of a uniform depth throughout the finished space. The outlet of the reducing coupling shall not extend more than 1 inch below the underside of the ceiling. On pendent sprinklers installed below suspended or dropped ceilings, the distance from the sprinkler deflector to the underside of the ceiling shall not exceed 4 inches.

3.2.4.1 Pendent Sprinkler Locations

Pendent sprinklers in suspended ceilings shall be a minimum of 6 inches from ceiling grid.

3.2.5 Upright Sprinklers

Riser nipples or "sprigs" to upright sprinklers shall contain no fittings between the branch line tee and the reducing coupling at the sprinkler. Riser nipples exceeding 30 inches in length shall be individually supported.

3.2.6 Pipe Joints

Pipe joints shall conform to NFPA 13, except as modified herein. Not more than four threads shall show after joint is made up. Welded joints will be permitted, only if welding operations are performed as required by NFPA 13 at the Contractor's fabrication shop, not at the project construction site. Flanged joints shall be provided where indicated or required by NFPA 13. Grooved pipe and fittings shall be prepared in accordance with the manufacturer's latest published specification according to pipe material, wall thickness and size. Grooved couplings and fittings shall be from the same manufacturer.

3.2.7 Reducers

Reductions in pipe sizes shall be made with one-piece tapered reducing fittings. The use of grooved-end or rubber-gasketed reducing couplings will not be permitted. When standard fittings of the required size are not manufactured, single bushings of the face type will be permitted. Where used, face bushings shall be installed with the outer face flush with the face of the fitting opening being reduced. Bushings shall not be used in elbow fittings, in more than one outlet of a tee, in more than two outlets of a cross, or where the reduction in size is less than 1/2 inch.

3.2.8 Pipe Penetrations

Cutting structural members for passage of pipes or for pipe-hanger fastenings will not be permitted. Pipes that must penetrate concrete or masonry walls or concrete floors shall be core-drilled and provided with pipe sleeves. Each sleeve shall be Schedule 40 galvanized steel, ductile iron or cast iron pipe and shall extend through its respective wall or floor and be cut flush with each wall surface. Sleeves shall provide required clearance between the pipe and the sleeve per NFPA 13. The space between the sleeve and the pipe shall be firmly packed with mineral wool insulation.

Where pipes pass through fire walls, fire partitions, or floors, a fire seal shall be placed between the pipe and sleeve in accordance with Section 07270 FIRESTOPPING. In penetrations which are not fire-rated or not a floor penetration, the space between the sleeve and the pipe shall be sealed at both ends with plastic waterproof cement which will dry to a firm but pliable mass or with a mechanically adjustable segmented elastomer seal.

3.2.9 Escutcheons

Escutcheons shall be provided for pipe penetration of ceilings and walls. Escutcheons shall be securely fastened to the pipe at surfaces through which piping passes.

3.2.10 Inspector's Test Connection

Unless otherwise indicated, test connection shall consist of 1 inch pipe connected to the remote branch line; a test valve located approximately 7 feet above the floor; a smooth bore brass outlet equivalent to the smallest orifice sprinkler used in the system; and a painted metal identification sign affixed to the valve with the words "Inspector's Test." The discharge orifice shall be located outside the building wall directed so as not to cause damage to adjacent construction or landscaping during full flow discharge.

3.2.11 Drains

Main drain piping shall be provided to discharge at a safe point outside the building. Auxiliary drains shall be provided as required by NFPA 13 except that drain valves shall be used where drain plugs are otherwise permitted. Where branch lines terminate at low points and form trapped sections, such branch lines shall be manifolded to a common drain line.

3.2.12 Installation of Fire Department Connection

Connection shall be mounted on the exterior wall approximately 900 mm above finished grade. The piping between the connection and the check valve shall be provided with an automatic drip in accordance with NFPA 13 and arranged to drain to the outside.

3.2.13 Identification Signs

Signs shall be affixed to each control valve, inspector test valve, main drain, auxiliary drain, test valve, and similar valves as appropriate or as required by NFPA 13. Hydraulic design data nameplates shall be permanently affixed to each sprinkler riser as specified in NFPA 13.

3.3 UNDERGROUND PIPING INSTALLATION

The fire protection water main shall be laid, and joints anchored, in accordance with NFPA 24. Minimum depth of cover shall be 3 feet. The supply line shall terminate inside the building with a flanged piece, the bottom of which shall be set not less than 6 inches above the finished floor. A blind flange shall be installed temporarily on top of the flanged piece to prevent the entrance of foreign matter into the supply line. A concrete thrust block shall be provided at the elbow where the pipe turns up toward the floor. In addition, joints shall be anchored in accordance with NFPA 24 using pipe clamps and steel rods from the elbow to the flange above

the floor and from the elbow to a pipe clamp in the horizontal run of pipe. Buried steel components shall be provided with a corrosion protective coating in accordance with AWWA C203. Piping more than 5 feet outside the building walls shall meet the requirements of Section 02660 WATER LINES.

3.4 EARTHWORK

Earthwork shall be performed in accordance with applicable provisions of Section 02221 EXCAVATION, FILLING AND BACKFILLING FOR BUILDINGS.

3.5 ELECTRICAL WORK

Alarm signal wiring connected to the building fire alarm control system shall be in accordance with Section 16721 FIRE DETECTION AND ALARM SYSTEM. Wiring color code shall remain uniform throughout the system.

3.6 STERILIZATION

After system components have been installed and pressure tested, each portion of the completed system shall be sterilized. After pressure tests have been made, the portion to be sterilized shall be thoroughly flushed with water until all entrained dirt and other foreign materials have been removed before introducing chlorinating material. The chlorinating material shall be hypochlorites or liquid chlorine. Water chlorination procedure shall be in accordance with AWWA M20. The chlorinating material shall be fed into the sprinkler piping at a constant rate of 50 parts per million (ppm). A properly adjusted hypochlorite solution injected into the system with a hypochlorinator, or liquid chlorine injected into the system through a solution-fed chlorinator and booster pump, shall be used. Chlorination application shall continue until the entire system is filled. The water shall remain in the system for a minimum of 24 hours. Each valve in the system shall be opened and closed several times to ensure its proper disinfection. Following the 24-hour period, no less than 25 ppm chlorine residual shall remain in the system. The system shall be then flushed with clean water until the residual chlorine is reduced to less than one part per million. Samples of water in properly sterilized containers for bacterial examination will be taken from several system locations which are approved by the Contracting Officer. Samples shall be tested for total coliform organisms (coliform bacteria, fecal coliform, streptococcal, and other bacteria) in accordance with AWWA-01. The testing method shall be either the multiple-tube fermentation technique or the membrane-filter technique. The sterilization shall be repeated until tests indicate the absence of coliform organisms (zero mean coliform density per 100 milliliters) in the samples for at least 2 full days. The system will not be accepted until satisfactory bacteriological results have been obtained.

3.7 FIELD PAINTING AND FINISHING

Field painting and finishing are specified in Section 09900 PAINTING, GENERAL.

3.8 PRELIMINARY TESTS

The system, including the underground water mains, and the aboveground piping and system components, shall be tested to assure that equipment and components function as intended. The underground and aboveground interior piping systems and attached appurtenances subjected to system working

pressure shall be tested in accordance with NFPA 13 and NFPA 24. Upon completion of specified tests, the Contractor shall complete certificates as specified in paragraph SUBMITTALS.

3.8.1 Aboveground Piping

3.8.1.1 Hydrostatic Testing

Aboveground piping shall be hydrostatically tested in accordance with NFPA 13 at not less than 200 psi or 50 psi in excess of maximum system operating pressure and shall maintain that pressure without loss for 2 hours. There shall be no drop in gauge pressure or visible leakage when the system is subjected to the hydrostatic test. The test pressure shall be read from a gauge located at the low elevation point of the system or portion being tested.

3.8.2 Testing of Alarm Devices

Each alarm switch shall be tested by flowing water through the inspector's test connection. Each water-operated alarm devices shall be tested to verify proper operation.

3.8.3 Main Drain Flow Test

A main drain test shall be made to verify the adequacy of the water supply. Static and residual pressures shall be recorded on the certificate specified in paragraph SUBMITTALS. In addition, a main drain test shall be conducted each time after a main control valve is shut and opened.

3.9 FINAL ACCEPTANCE TEST

A technician employed by the installing Contractor shall be present for the final tests and shall provide a complete demonstration of the operation of the system. This shall include operation of control valves and flowing of inspector's test connections to verify operation of associated waterflow alarm switches. After operation of control valves has been completed, the main drain test shall be repeated to assure that control valves are in the open position. In addition, the representative shall have available copies of as-built drawings and certificates of tests previously conducted. The installation shall not be considered accepted until identified discrepancies have been corrected and test documentation is properly completed and received.

END OF SECTION

SECTION 15400

PLUMBING, GENERAL PURPOSE

1 GENERAL

1.1 REFERENCES

The publications listed below form a part of this specification to the extent referenced. The publications are referred to in the text by basic designation only.

AIR CONDITIONING AND REFRIGERATION INSTITUTE (ARI)

ARI 700	(1993) Specifications for Fluorocarbon and Other Refrigerants
ARI 1010	(1994) Drinking-Fountains and Self-Contained, Mechanically-Refrigerated Drinking-Water Coolers

AMERICAN NATIONAL STANDARDS INSTITUTE (ANSI)

ANSI Z21.10.1	(1993; Z21.10.1a) Gas Water Heaters Vol. I Storage Water Heaters with Input Ratings of 75,000 Btu Per Hour or Less
ANSI Z21.10.3	(1993; Z21.10.3a) Gas Water Heaters Vol. III Storage, With Input Ratings Above 75,000 Btu Per Hour, Circulating and Instantaneous Water Heaters
ANSI Z21.22	(1986; Z21.22a) Relief Valves and Automatic Gas Shutoff Devices for Hot Water Supply Systems
ANSI Z21.56	(1991; Z21.56a; Z21.56b) Gas-Fired Pool Heaters
ANSI Z124.1	(1987; Z124.1a; Z124.1b) Plastic Bathtub Units
ANSI Z124.3	(1987; Z124.3a) Plastic Lavatories

AMERICAN SOCIETY FOR TESTING AND MATERIALS (ASTM)

ASTM A 47	(1990) Ferritic Malleable Iron Castings
ASTM A 53	(1993a) Pipe, Steel, Black and Hot-Dipped, Zinc-Coated Welded and Seamless
ASTM A 74	(1994) Cast Iron Soil Pipe and Fittings
ASTM A 105	(1995) Forgings, Carbon Steel, for Piping Components

ASTM A 183	(1983; R 1990) Carbon Steel Track Bolts and Nuts
ASTM A 193	(1996) Alloy-Steel and Stainless Steel Bolting Materials for High-Temperature Service
ASTM A 515	(1992) Pressure Vessel Plates, Carbon Steel, for Intermediate- and Higher-Temperature Service
ASTM A 516	(1990) Pressure Vessel Plates, Carbon Steel, for Moderate- and Lower-Temperature Service
ASTM A 518	(1992) Corrosion-Resistant High-Silicon Iron Castings
ASTM A 536	(1984; R 1993) Ductile Iron Castings
ASTM A 733	(1993) Welded and Seamless Carbon Steel and Austenitic Stainless Steel Pipe Nipples
ASTM A 888	(1994) Hubless Cast Iron Soil Pipe and Fittings for Sanitary and Storm Drain, Waste, and Vent Piping Applications
ASTM B 32	(1995) Solder Metal
ASTM B 42	(1993) Seamless Copper Pipe, Standard Sizes
ASTM B 43	(1994) Seamless Red Brass Pipe, Standard Sizes
ASTM B 75	(1993) Seamless Copper Tube
ASTM B 88	(1993a) Seamless Copper Water Tube
ASTM B 111	(1993) Copper and Copper-Alloy Seamless Condenser Tubes and Ferule Stock
ASTM B 117	(1994) Operating Salt Spray (Fog) Testing Apparatus
ASTM B 152	(1994) Copper Sheet, Strip, Plate, and Rolled Bar
ASTM B 306	(1992) Copper Drainage Tube (DWV)
ASTM B 370	(1992) Copper Sheet and Strip for Building Construction
ASTM B 584	(1993b) Copper Alloy Sand Castings for General Applications
ASTM B 641	(1993) Seamless and Welded Copper Distribution Tube (Type D)

ASTM B 813	(1993) Liquid and Paste Fluxes for Soldering Applications of Copper and Copper Alloy Tube
ASTM B 828	(1992) Making Capillary Joints by Soldering of Copper and Copper-Alloy Tube & Fittings
ASTM C 564	(1994a) Rubber Gaskets for Cast Iron Soil Pipe and Fittings
ASTM C 920	(1987) Elastomeric Joint Sealants
ASTM C 1053	(1990) Borosilicate Glass Pipe and Fittings for Drain, Waste, and Vent (DWV) Applications
ASTM D 638	(1994b) Tensile Properties of Plastics
ASTM D 1004	(1994a) Initial Tear Resistance of Plastic Film and Sheeting
ASTM D 1248	(1984; R 1989) Polyethylene Plastics Molding and Extrusion Materials
ASTM D 1785	(1993) Poly(Vinyl Chloride) (PVC) Plastic Pipe, Schedules 40, 80, and 120
ASTM D 2000	(1990; R 1994) Rubber Products in Automotive Applications
ASTM D 2235	(1993a) Solvent Cement for Acrylonitrile-Butadiene-Styrene (ABS) Plastic Pipe and Fittings
ASTM D 2239	(1993) Polyethylene (PE) Plastic Pipe (SIDR-PR) Based on Controlled Inside Diameter
ASTM D 2241	(1993) Poly(Vinyl Chloride) (PVC) Pressure-Rated Pipe (SDR Series)
ASTM D 2447	(1993) Polyethylene (PE) Plastic Pipe, Schedules 40 and 80, Based on Outside Diameter
ASTM D 2464	(1993) Threaded Poly(Vinyl Chloride) (PVC) Plastic Pipe Fittings, Schedule 80
ASTM D 2466	(1993) Poly(Vinyl Chloride) (PVC) Plastic Pipe Fittings, Schedule 40
ASTM D 2467	(1993) Socket-Type Poly(Vinyl Chloride) (PVC) Plastic Pipe Fittings, Schedule 80
ASTM D 2485	(1991) Evaluating Coatings for High Temperature Service
ASTM D 2564	(1993) Solvent Cements for Poly(Vinyl Chloride) (PVC) Plastic Piping Systems

ASTM D 2657	(1990) Heat-Joining Polyolefin Pipe and Fittings
ASTM D 2661	(1994a) Acrylonitrile-Butadiene-Styrene (ABS) Schedule 40 Plastic Drain, Waste, and Vent Pipe and Fittings
ASTM D 2665	(1994) Poly(Vinyl Chloride) (PVC) Plastic Drain, Waste, and Vent Pipe and Fittings
ASTM D 2672	(1994) Joints for IPS PVC Pipe Using Solvent Cement
ASTM D 2683	(1993) Socket-Type Polyethylene Fittings for Outside Diameter-Controlled Polyethylene Pipe and Tubing
ASTM D 2737	(1993) Polyethylene (PE) Plastic Tubing
ASTM D 2822	(1991) Asphalt Roof Cement
ASTM D 2846	(1993) Chlorinated Poly(Vinyl Chloride) (CPVC) Plastic Hot- and Cold-Water Distribution Systems
ASTM D 2855	(1993) Making Solvent-Cemented Joints with Poly(Vinyl Chloride) (PVC) Pipe and Fittings
ASTM D 2996	(1995) Filament-Wound "Fiberglass" (Glass-Fiber-Reinforced Thermosetting-Resin) Pipe
ASTM D 3035	(1993) Polyethylene (PE) Plastic Pipe (DR-PR) Based on Controlled Outside Diameter
ASTM D 3122	(1993) Solvent Cements for Styrene-Rubber (SR) Plastic Pipe and Fittings
ASTM D 3138	(1993) Solvent Cements for Transition Joints Between Acrylonitrile-Butadiene-Styrene (ABS) and Poly(Vinyl Chloride) (PVC) Non-pressure Piping Components
ASTM D 3139	(1989; R 1995) Joints for Plastic Pressure Pipes Using Flexible Elastomeric Seals
ASTM D 3212	(1992) Joints for Drain and Sewer Plastic Pipes Using Flexible Elastomeric Seals
ASTM D 3261	(1993) Butt Heat Fusion Polyethylene (PE) Plastic Fittings for Polyethylene (PE) Plastic Pipe and Tubing
ASTM D 3308	(1991a) PTFE Resin Skived Tape
ASTM D 3311	(1992) Drain, Waste, and Vent (DWV) Plastic Fittings Patterns

ASTM D 4060	(1995) Abrasion Resistance of Organic Coatings by the Taber Abraser
ASTM D 4101	(1994) Propylene Plastic Injection and Extrusion Materials
ASTM D 4551	(1991) Poly(Vinyl Chloride) (PVC) Plastic Flexible Concealed Water-Containment Membrane
ASTM E 1	(1995) ASTM Thermometers
ASTM E 96	(1996) Water Vapor Transmission of Materials
ASTM F 409	(1993) Thermoplastic Accessible and Replaceable Plastic Tube and Tubular Fittings
ASTM F 437	(1993) Threaded Chlorinated Poly(Vinyl Chloride) (CPVC) Plastic Pipe Fittings, Schedule 80
ASTM F 438	(1993) Socket-Type Chlorinated Poly(Vinyl Chloride) (CPVC) Plastic Pipe Fittings, Schedule 40
ASTM F 439	(1993a) Socket-Type Chlorinated Poly(Vinyl Chloride) (CPVC) Plastic Pipe Fittings, Schedule 80
ASTM F 441	(1994) Chlorinated Poly(Vinyl Chloride) (CPVC) Plastic Pipe, Schedules 40 and 80
ASTM F 442	(1994) Chlorinated Poly(Vinyl Chloride) (CPVC) Plastic Pipe (SDR-PR)
ASTM F 477	(1993) Elastomeric Seals (Gaskets) for Joining Plastic Pipe
ASTM F 493	(1993a) Solvent Cements for Chlorinated Poly(Vinyl Chloride) (CPVC) Plastic Pipe and Fittings
ASTM F 628	(1993) Acrylonitrile-Butadiene-Styrene (ABS) Schedule 40 Plastic Drain, Waste, and Vent Pipe with a Cellular Core
ASTM F 891	(1993a) Coextruded Poly(Vinyl Chloride) (PVC) Plastic Pipe with a Cellular Core
ASTM F 1290	(1993) Electrofusion Joining Polyolefin Pipe and Fittings

AMERICAN SOCIETY OF HEATING, REFRIGERATING AND AIR-CONDITIONING ENGINEERS (ASHRAE)

ASHRAE 34	(1994) Designation and Safety Classification of Refrigerants
ASHRAE 90.1	(1989; 90.1b; 90.1c; 90.1d; 90.1e; 90.1g; 90.1i) Energy Efficient Design of New Buildings Except Low-Rise Residential Buildings

AMERICAN SOCIETY OF MECHANICAL ENGINEERS (ASME)

ASME A112.1.2	(1991) Air Gaps in Plumbing Systems
ASME A112.6.1M	(1988) Supports for Off-the-Floor Plumbing Fixtures for Public Use
ASME A112.14.1	(1975; R 1990) Backwater Valves
ASME A112.18.1M	(1994; Errata Feb 1995) Plumbing Fixture Fittings
ASME A112.19.1M	(1994) Enameled Cast Iron Plumbing Fixtures
ASME A112.19.2M	(1990) Vitreous China Plumbing Fixtures
ASME A112.19.3M	(1987) Stainless Steel Plumbing fixtures (Designed for Residential Use)
ASME A112.19.4M	(1994) Porcelain Enameled Formed Steel Plumbing Fixtures
ASME A112.21.1M	(1991) Floor Drains
ASME A112.21.2M	(1983) Roof Drains
ASME A112.36.2M	(1991) Cleanouts
ASME B1.20.1	(1983; R 1992) Pipe Threads, General Purpose (Inch)
ASME B16.3	(1992) Malleable Iron Threaded Fittings
ASME B16.4	(1992) Cast Iron Threaded Fittings
ASME B16.5	(1988; Errata Oct 88; B16.5a) Pipe Flanges and Flanged Fittings
ASME B16.12	(1991) Cast Iron Threaded Drainage Fittings
ASME B16.15	(1985; R 1994) Cast Bronze Threaded Fittings Classes 125 and 250
ASME B16.18	(1984; R 1994) Cast Copper Alloy Solder Joint Pressure Fittings

ASME B16.21	(1992) Nonmetallic Flat Gaskets for Pipe Flanges
ASME B16.22	(1989) Wrought Copper and Copper Alloy Solder Joint Pressure Fittings
ASME B16.23	(1992; Errata Jan 1994) Cast Copper Alloy Solder Joint Drainage Fittings - DWV
ASME B16.24	(1991; Errata Jun 91) Cast Copper Alloy Pipe Flanges, Class 150, 300, 400, 600, 900, 1500 and 2500, and Flanged Fittings, Class 150 and 300
ASME B16.29	(1994) Wrought Copper and Wrought Copper Alloy Solder Joint Drainage Fittings - DWV
ASME B16.39	(1986; R 1994) Malleable Iron Threaded Pipe Unions Classes 150, 250, and 300
ASME B31.1	(1995) Power Piping
ASME B31.5	(1992; B31.5a) Refrigeration Piping
ASME B40.1	(1991) Gauges - Pressure Indicating Dial Type - Elastic Element
ASME BPV VIII Div 1	(1995; Addenda Dec 1995) Boiler and Pressure Vessel Code; Section VIII, Pressure Vessels Division 1 - Basic Coverage
ASME BPV IX	(1995; Addenda Dec 1995) Boiler and Pressure Vessel Code; Section IX, Welding and Brazing Qualifications
ASME CSD-1	(1992; CSD-1a; CSD-1b) Controls and Safety Devices for Automatically Fired Boilers

AMERICAN SOCIETY OF SANITARY ENGINEERING (ASSE)

ASSE 1001	(1990) Pipe Applied Atmospheric Type Vacuum Breakers
ASSE 1002	(1992) Water Closet Flush Tank Ball Locks
ASSE 1003	(1981) Water Pressure Reducing Valves for Domestic Water Supply Systems
ASSE 1005	(1993) Water Heater Drain Valves - 3/4-Inch Iron Pipe Size
ASSE 1006	(1986) Residential Use (Household) Dishwashers
ASSE 1011	(1993) Hose Connection Vacuum Breakers

ASSE 1012	(1993) Backflow Preventers with Intermediate Atmospheric Vent
ASSE 1013	(1993) Reduced Pressure Principle Backflow Preventers
ASSE 1018	(1986) Trap Seal Primer Valves Water Supply Fed
ASSE 1037	(1990) Pressurized Flushing Devices (Flushometers) for Plumbing Fixtures/F

AMERICAN WATER WORKS ASSOCIATION (AWWA)

AWWA-10062J4	(1992) Standard Methods for the Examination of Water and Wastewater
AWWA B300	(1992) Hypochlorites
AWWA B301	(1992) Liquid Chlorine
AWWA C105	(1988) Polyethylene Encasement for Ductile-Iron Piping for Water and Other Liquids
AWWA C203	(1991) Coal-Tar Protective Coatings and Linings for Steel Water Pipelines - Enamel and Tape - Hot-Applied
AWWA C606	(1987) Grooved and Shouldered Joints
AWWA C700	(1990; C700a) Cold-Water Meters - Displacement Type, Bronze Main Case
AWWA M20	(1973) Manual: Water Chlorination Principles and Practices

AMERICAN WELDING SOCIETY (AWS)

AWS A5.8	(1992) Filler Metals for Brazing and Braze Welding
AWS B2.2	(1991) Brazing Procedure and Performance Qualification

CAST IRON SOIL PIPE INSTITUTE (CISPI)

CISPI 301	(1990) Hubless Cast Iron Soil Pipe and Fittings for Sanitary and Storm Drain, Waste, and Vent Piping Applications
CISPI HSN	(1985) Neoprene Rubber Gaskets for Hub and Spigot Cast Iron Soil Pipe and Fittings

CODE OF FEDERAL REGULATIONS (CFR)

10 CFR 430	Energy Conservation Program for Consumer Products

21 CFR 175	Indirect Food Additives: Adhesives and Components of Coatings

COMMERCIAL ITEM DESCRIPTIONS (CID)

CID A-A-238	(Rev B) Seat, Water Closet
CID A-A-240	(Basic) Shower Head, Ball Joint
CID A-A-50012	(Basic) Garbage Disposal Machine, Commercial

COPPER DEVELOPMENT ASSOCIATION (CDA)

CDA 404/O-RR	(1993) Copper Tube for Plumbing, Heating, Air Conditioning and Refrigeration

COUNCIL OF AMERICAN BUILDING OFFICIALS (CABO)

CABO A117.1	(1992; Errata Jun 1993) American National Standard for Accessible and Usable buildings and Facilities

FOUNDATION FOR CROSS-CONNECTION CONTROL AND HYDRAULIC RESEARCH (FCCHR)

FCCHR-01	(1993) Manual of Cross-Connection Control

HYDRAULIC INSTITUTE (HI)

HI-01	(1983) Standards for Centrifugal, Rotary & Reciprocating Pumps

MANUFACTURERS STANDARDIZATION SOCIETY OF THE VALVE AND FITTINGS INDUSTRY (MSS)

MSS SP-25	(1993) Standard Marking System for Valves, Fittings, Flanges and Unions
MSS SP-44	(1991) Steel Pipe Line Flanges
MSS SP-58	(1993) Pipe Hangers and Supports - Materials, Design and Manufacture
MSS SP-67	(1995) Butterfly Valves
MSS SP-69	(1991) Pipe Hangers and Supports - Selection and Application
MSS SP-70	(1990) Cast Iron Gate Valves, Flanged and Threaded Ends
MSS SP-71	(1990) Cast Iron Swing Check Valves, Flanges and Threaded Ends
MSS SP-72	(1992) Ball Valves with Flanged or Butt-welding Ends for General Service

MSS SP-73	(1991) Brazing Joints for Copper and Copper Alloy Pressure Fittings
MSS SP-78	(1987; R 1992) Cast Iron Plug Valves, Flanged and Threaded Ends
MSS SP-80	(1987) Bronze Gate, Globe, Angle and Check Valves
MSS SP-83	(1995) Class 3000 Steel Pipe Unions Socket-Welding and Threaded
MSS SP-84	(1990) Valves - Socket Welding and Threaded Ends
MSS SP-85	(1994) Cast Iron Globe & Angle Valves, Flanged and Threaded Ends
MSS SP-110	(1992) Ball Valves Threaded, Socket-Welding, Solder Joint, Grooved and Flared Ends

NATIONAL ASSOCIATION OF PLUMBING-HEATING-COOLING CONTRACTORS (NAPHCC)

NAPHCC-01	(1993; Supple 1994) National Standard Plumbing Code (Non-Illustrated Edition)
NAPHCC-02	(1993) National Standard Plumbing Code (Illustrated Edition)

NATIONAL ELECTRICAL MANUFACTURERS ASSOCIATION (NEMA)

NEMA 250	(1991) Enclosures for Electrical Equipment (1000 Volts Maximum)

NATIONAL FIRE PROTECTION ASSOCIATION (NFPA)

NFPA 31	(1992) Installation of Oil Burning Equipment
NFPA 54	(1992) National Fuel Gas Code
NFPA 90A	(1993) Installation of Air Conditioning and Ventilating Systems

NSF INTERNATIONAL (NSF)

NSF Std 3	(1982) Dishwashing Machines/Commercial Spray Type
NSF Std 5	(1992) Hot Water Generating Equipment
NSF Std 14	(1965; Rev Nov 1990) Plastics Piping Components and Related Materials

PLASTIC PIPE AND FITTINGS ASSOCIATION (PPFA)

PPFA-01	(1991) Plastic Pipe in Fire Resistive Construction

PLUMBING AND DRAINAGE INSTITUTE (PDI)

PDI G-101	(1985) Testing and Rating Procedures for Grease Interceptors
PDI WH 201	(1992) Water Hammer Arresters

SOCIETY OF AUTOMOTIVE ENGINEERS (SAE)

SAE J1508	(1993) Hose Clamps

STEEL STRUCTURES PAINTING COUNCIL (SSPC)

SSPC SP 5	(1991) White Metal Blast Cleaning

UNDERWRITERS LABORATORIES (UL)

UL 174	(1989; Rev thru Jan 1991) Household Electric Storage-Tank Water Heaters
UL 430	(1994; Rev Nov 95) Waste Disposers
UL 732	(1988) Oil-Fired Storage Tank Water Heaters
UL 749	(1995) Household Dishwashers
UL 921	(1992) Commercial Electric Dishwashers

1.2 STANDARD PRODUCTS

Specified materials and equipment shall be standard products of a manufacturer regularly engaged in the manufacture of such products. Specified equipment shall essentially duplicate equipment that has performed satisfactorily at least two years prior to bid opening.

1.3 PERFORMANCE REQUIREMENTS

1.4 ELECTRICAL WORK

Motors, motor controllers and motor efficiencies shall conform to the requirements of Section 16415 ELECTRICAL WORK, INTERIOR. Electrical motor-driven equipment specified herein shall be provided complete with motors. Equipment shall be rated at 60 Hz, single phase, ac unless otherwise indicated. Where a motor controller is not provided in a motor-control center on the electrical drawings, a motor controller shall be as indicated. Motor controllers shall be provided complete with properly sized thermal-overload protection in each ungrounded conductor, auxiliary contact, and other equipment, at the specified capacity, and including an allowable service factor.

1.5 SUBMITTALS

Government approval is required for submittals with a "GA" designation; submittals having an "FIO" designation are for information only. The following shall be submitted in accordance with Section 01330 SUBMITTAL PROCEDURES:

SD-01 Data

Product Data; FIO.

Detailed information on all material and equipment proposed. Include mounting hardware and dimensional requirements.

SD-06 Instructions

Plumbing System; FIO.

Diagrams, instructions, and other sheets proposed for posting. Manufacturer's recommendations for the installation of bell and spigot and hubless joints for cast iron soil pipe.

SD-09 Reports

Tests, Flushing and Sterilization; FIO.

Test reports in booklet form showing all field tests performed to adjust each component and all field tests performed to prove compliance with the specified performance criteria, completion and testing of the installed system. Each test report shall indicate the final position of controls.

SD-13 Certificates

Materials and Equipment; FIO.

Where materials or equipment are specified to comply with requirements of AGA, or ASME, proof of such compliance. The label or listing of the specified agency will be acceptable evidence. In lieu of the label or listing, a written certificate may be submitted from an approved, nationally recognized testing organization equipped to perform such services, stating that the items have been tested and conform to the requirements and testing methods of the specified agency. Where equipment is specified to conform to requirements of the ASME Boiler and Pressure Vessel Code, the design, fabrication, and installation shall conform to the code.

SD-19 Operation and Maintenance Manuals

Plumbing System; FIO.

Six copies of the operation manual outlining the step-by-step procedures required for system startup, operation and shutdown. The manual shall include the manufacturer's name, model number, service manual, parts list, and brief description of all equipment and their basic operating features. Six copies of the maintenance manual listing routine maintenance procedures, possible breakdowns and repairs. The manual shall include piping and equipment layout and simplified wiring and control diagrams of the system as installed.

1.6 REGULATORY REQUIREMENTS

1.6.1 Plumbing

Plumbing work shall be in accordance with NAPHCC-01, unless otherwise stated and installed in accordance with NAPHCC-02.

1.7 PROJECT/SITE CONDITIONS

The Contractor shall become familiar with details of the work, verify dimensions in the field, and advise the Contracting Officer of any discrepancy before performing any work.

2 PRODUCTS

2.1 MATERIALS

Materials for various services shall be in accordance with TABLES I and II. Pipe schedules shall be selected based on service requirements. Pipe fittings shall be compatible with the applicable pipe materials. Pipe threads (except dry seal) shall conform to ASME B1.20.1. Grooved pipe couplings and fittings shall be from the same manufacturer. Material or equipment containing lead shall not be used in any potable water system. Hubless cast-iron soil pipe shall not be installed under concrete floor slabs.

2.1.1 Pipe Joint Materials

Grooved pipe shall not be used under ground. Joints and gasket materials shall conform to the following:

a. Coupling for Cast-Iron Pipe: ASTM A 74, AWWA C606.

b. Coupling for Steel Pipe: AWWA C606.

c. Couplings for Grooved Pipe: Ductile Iron ASTM A 536 (Grade 65-45-12). Malleable Iron ASTM A 47, Grade 32510.

d. Flange Gaskets: Gaskets shall be made of non-asbestos material in accordance with ASME B16.21. Gaskets shall be flat, 1/16 inch thick, and contain Aramid fibers bonded with Styrene Butadiene Rubber (SBR) or Nitro Butadiene Rubber (NBR). Gaskets shall be the full face or self centering flat ring type. Gaskets used for hydrocarbon service shall be bonded with NBR.

e. Neoprene Gaskets for Hub and Cast-Iron Pipe and Fittings: CISPI HSN.

f. Brazing Material: Brazing material shall conform to AWS A5.8, BCuP-5.

g. Brazing Flux: Flux shall be in paste or liquid form appropriate for use with brazing material. Flux shall be as follows: lead-free; have a 100 percent flushable residue; contain slightly acidic reagents; contain potassium borides; and contain fluorides. Silver brazing materials shall be in accordance with AWS A5.8.

h. Solder Material: Solder metal shall conform to ASTM B 32 95-5 tin-antimony.

i. Solder Flux: Flux shall be liquid form, non-corrosive, and conform to ASTM B 813, Standard Test 1.

j. PTFE Tape: PTFE Tape, for use with Threaded Metal or Plastic Pipe, ASTM D 3308.

k. Rubber Gaskets for Cast-Iron Soil-Pipe and Fittings: ASTM C 564.

l. Rubber Gaskets for Grooved Pipe: ASTM D 2000, maximum temperature 230 degrees F.

m. Flexible Elastomeric Seals: ASTM D 3139, ASTM D 3212 or ASTM F 477.

n. Bolts and Nuts for Grooved Pipe Couplings: Heat-treated carbon steel, ASTM A 183.

o. Flanged fittings including flanges, bolts, nuts, bolt patterns, etc. shall be in accordance with ASME B16.5 class 150 and shall have the manufacturer's trademark affixed in accordance with MSS SP-25. Flange material shall conform to ASTM A 105. Blind flange material shall conform to ASTM A 516 cold service and ASTM A 515 for hot service. Bolts shall be high strength or intermediate strength with material conforming to ASTM A 193.

2.1.2 Miscellaneous Materials

Miscellaneous materials shall conform to the following:

a. Water Hammer Arrester: PDI WH 201.

b. Copper, Sheet and Strip for Building Construction: ASTM B 370.

c. Hose Clamps: SAE J1508.

d. Supports for Off-The-Floor Plumbing Fixtures: ASME A112.6.1M.

e. Metallic Cleanouts: ASME A112.36.2M.

f. Plumbing Fixture Setting Compound: A preformed flexible ring seal molded from hydrocarbon wax material. The seal material shall be nonvolatile nonasphaltic and contain germicide and provide watertight, gastight, odorproof and verminproof properties.

g. Coal-Tar Protective Coatings and Linings for Steel Water Pipelines: AWWA C203.

h. Hypochlorites: AWWA B300.

i. Liquid Chlorine: AWWA B301.

j. Polyethylene Encasement for Ductile-Iron Piping: AWWA C105.

k. Gauges - Pressure and Vacuum Indicating Dial Type - Elastic Element: ASME B40.1.

l. Thermometers: ASTM E 1.

2.1.3 Pipe Insulation Material

Insulation shall be as specified in Section 15250 THERMAL INSULATION FOR MECHANICAL SYSTEMS.

2.2 PIPE HANGERS, INSERTS, AND SUPPORTS

Pipe hangers, inserts, and supports shall conform to MSS SP-58 and MSS SP-69.

2.3 VALVES

Valves shall be provided on supplies to equipment and fixtures. Valves 65 mm and smaller shall be bronze with threaded bodies for pipe and solder-type connections for tubing. Valves 3 inches and larger shall have flanged iron bodies and bronze trim. Pressure ratings shall be based upon the application. Grooved end valves may be provided if the manufacturer certifies that the valves meet the performance requirements of applicable MSS standard. Valves shall conform to the following standards:

Description	Standard
Butterfly Valves	MSS SP-67
Cast-Iron Gate Valves, Flanged and Threaded Ends	MSS SP-70
Cast-Iron Swing Check Valves, Flanged and Threaded Ends	MSS SP-71
Ball Valves with Flanged Butt-Welding Ends for General Service	MSS SP-72
Ball Valves Threaded, Socket-Welding, Solder Joint, Grooved and Flared Ends	MSS SP-110
Cast-Iron Plug Valves, Flanged and Threaded Ends	MSS SP-78
Bronze Gate, Globe, Angle, and Check Valves	MSS SP-80
Steel Valves, Socket Welding and Threaded Ends	MSS SP-84
Cast-Iron Globe and Angle Valves, Flanged and Threaded Ends	MSS SP-85
Backwater Valves	ASME A112.14.1
Vacuum Relief Valves	ASSE 1001

Water Pressure Reducing Valves	ASSE 1003
Water Heater Drain Valves	ASSE 1005
Trap Seal Primer Valves	ASSE 1018
Temperature and Pressure Relief Valves for Hot Water Supply Systems	ANSI Z21.22
Temperature and Pressure Relief Valves for Automatically Fired Hot Water Boilers	ASME CSD-1 Safety Code No., Part CW, Article 5

2.3.1 Wall Hydrants

Wall hydrants with vacuum-breaker backflow preventer shall have a nickle-brass or nickel-bronze wall plate or flange with nozzle and detachable key handle. A brass or bronze operating rod shall be provided within a galvanized iron casing of sufficient length to extend through the wall so that the valve is inside the building, and the portion of the hydrant between the outlet and valve is self-draining. A brass or bronze valve with coupling and union elbow having metal-to-metal seat shall be provided. Valve rod and seat washer shall be removable through the face of the hydrant. The hydrant shall have 3/4 inch exposed hose thread on spout and 3/4 inch male pipe thread on inlet.

2.3.2 Relief Valves

Water heaters and hot water storage tanks shall have a combination pressure and temperature (P&T) relief valve. The pressure relief element of a P&T relief valve shall have adequate capacity to prevent excessive pressure buildup in the system when the system is operating at the maximum rate of heat input. The temperature element of a P&T relief valve shall have a relieving capacity which is at least equal to the total input of the heaters when operating at their maximum capacity. Relief valves shall be rated according to ANSI Z21.22. Relief valves for systems where the maximum rate of heat input is less than 200,000 Btuh shall have 3/4 inch minimum inlets, and 3/4 inch outlets. Relief valves for systems where the maximum rate of heat input is greater than 200,000 Btuh shall have 1 inch minimum inlets, and 1 inch outlets. The discharge pipe from the relief valve shall be the size of the valve outlet.

2.4 FIXTURES

Fixtures shall be water conservation type, in accordance with NAPHCC-01. Fixtures for use by the physically handicapped shall be in accordance with CABO A117.1. Vitreous china, nonabsorbent, hard-burned, and vitrified throughout the body shall be provided. Porcelain enameled ware shall have specially selected, clear white, acid-resisting enamel coating evenly applied on surfaces. No fixture will be accepted that shows cracks, crazes, blisters, thin spots, or other flaws. Fixtures shall be equipped with appurtenances such as traps, faucets, stop valves, and drain fittings. Each fixture and piece of equipment requiring connections to the drainage system, except grease interceptors, shall be equipped with a trap. Brass expansion or toggle bolts capped with acorn nuts shall be provided for supports, and polished chromium-plated pipe, valves, and fittings shall be provided where exposed to view. Fixtures with the supply discharge below the rim shall be

equipped with backflow preventers. Internal parts of flush and/or flushometer valves, shower mixing valves, shower head face plates, pop-up stoppers of lavatory waste drains, and pop-up stoppers and overflow tees and shoes of bathtub waste drains may contain acetal resin, fluorocarbon, nylon, acrylonitrile-butadiene-styrene (ABS) or other plastic material, if the material has provided satisfactory service under actual commercial or industrial operating conditions for not less than 2 years. Plastic in contact with hot water shall be suitable for 180 degrees F water temperature. Plumbing fixtures shall be as indicated in paragraph PLUMBING FIXTURE SCHEDULE.

2.4.1 Lavatories

Enameled cast-iron lavatories shall be provided with two cast-iron or steel brackets secured to the underside of the apron and drilled for bolting to the wall in a manner similar to the hanger plate. Exposed brackets shall be porcelain enameled.

2.5 BACKFLOW PREVENTERS

Backflow preventers shall be approved and listed by the Foundation For Cross-Connection Control & Hydraulic Research. Reduced pressure principle assemblies, double check valve assemblies, atmospheric (nonpressure) type vacuum breakers, and pressure type vacuum breakers shall be tested, approved, and listed in accordance with FCCHR-01. Backflow preventers with intermediate atmospheric vent shall conform to ASSE 1012. Reduced pressure principle backflow preventers shall conform to ASSE 1013. Hose connection vacuum breakers shall conform to ASSE 1011. Pipe applied atmospheric type vacuum breakers shall conform to ASSE 1001. Air gaps in plumbing systems shall conform to ASME A112.1.2.

2.6 DRAINS

2.6.1 Floor and Shower Drains (FD-1)

Floor and shower drains shall consist of a galvanized body, integral seepage pan, and adjustable perforated or slotted chromium-plated bronze, nickel-bronze, or nickel-brass strainer, consisting of grate and threaded collar. Floor drains shall be cast iron except where metallic waterproofing membrane is installed. Drains shall be of double drainage pattern for embedding in the floor construction. The seepage pan shall have weep holes or channels for drainage to the drainpipe. The strainer shall be adjustable to floor thickness. A clamping device for attaching flashing or waterproofing membrane to the seepage pan without damaging the flashing or waterproofing membrane shall be provided when required. Drains shall be provided with threaded or caulked connection and a trap primer connection where indicated. In lieu of a caulked joint between the drain outlet and waste pipe, a neoprene rubber gasket conforming to ASTM C 564 may be installed, provided that the drain is specifically designed for the rubber gasket compression type joint. Floor and shower drains shall conform to ASME A112.21.1M.

2.6.2 Mechanical Room Drains (FD-2)

Similar to FD-1, except provide round top antiflood rim flush with floor to recess drain grate for collection of condensate drains.

2.7 TRAP PRIMERS

Automatic trap primer with 1/2 inch inch connection, air gap type, with distribution unit where required.

2.8 WATER HAMMER ARRESTERS

In line factory-sealed shock arresters with direct action bellows and screwed connections.

2.9 TRAPS

Unless otherwise specified, traps shall be copper-alloy adjustable tube type with slip joint inlet and swivel. Traps shall be without a cleanout. Tubes shall be copper alloy with walls not less than 0.032 inch thick within commercial tolerances, except on the outside of bends where the thickness may be reduced slightly in manufacture by usual commercial methods. Inlets shall have rubber washer and copper alloy nuts for slip joints above the discharge level. Swivel joints shall be below the discharge level and shall be of metal-to-metal or metal-to-plastic type as required for the application. Nuts shall have flats for wrench grip. Outlets shall have internal pipe thread, except that when required for the application, the outlets shall have sockets for solder-joint connections. The depth of the water seal shall be not less than 2 inches. The interior diameter shall be not more than 1/8 inch over or under the nominal size, and interior surfaces shall be reasonably smooth throughout. A copper alloy "P" trap assembly consisting of an adjustable "P" trap and threaded trap wall nipple with cast brass wall flange shall be provided for lavatories. The assembly shall be a standard manufactured unit and may have a rubber-gasketed swivel joint.

2.10 WATER HEATER

Water heater types and capacities shall be as indicated. Each primary water heater shall have controls adjustable from 90 to 120 degrees F. The thermal efficiencies and stand by heat losses shall conform to TABLE III for each type of water heater specified. The only exception is that the storage capacity need not meet the standard loss requirement if the tank surface area is not insulated to R-12.5 and if a standing light is not used.

2.10.1 Gas-Fired Type

Gas-fired water heaters shall conform to ANSI Z21.10.1 when input is 75,000 Btu per hour or less or ANSI Z21.10.3 for heaters with input greater than 75,000 Btu per hour.

2.11 PUMPS

2.11.1 Circulating Pumps

Domestic hot water circulating pumps shall be electrically driven, single-stage, centrifugal, with mechanical seals, suitable for the intended service. Pump capacities, efficiencies, motor sizes, speeds, and impeller types shall be as shown. Pump and motor shall be supported by the piping on which it is installed. The shaft shall be one-piece, heat-treated, corrosion-resisting steel with impeller and smooth-surfaced housing of bronze. Motor shall be totally enclosed, fan-cooled and shall have sufficient wattage for the service required. Pump shall conform to HI-01.

Each pump motor shall be equipped with an across-the-line magnetic controller in a NEMA 250, Type 1 enclosure with "START-STOP" switch in cover. Pump motors smaller than 746 W shall have integral thermal overload protection in accordance with Section 16415 ELECTRICAL WORK, INTERIOR. Guards shall shield exposed moving parts.

2.12 COMPRESSED AIR

2.12.1 Air Compressors

Air compressor unit shall be a factory-packaged assembly, including 3 phase, 480 volt motor controls, switches, wiring, accessories, and motor controllers, in a NEMA 250, Type 1 enclosure. Tank-mounted air compressors shall be manufactured to comply with UL listing requirements. Air compressors shall have manufacturer's name and address, together with trade name, and catalog number on a nameplate securely attached to the equipment. Each compressor shall start and stop automatically at upper and lower pressure limits of the system. Guards shall shield exposed moving parts. Each duplex compresor system shall be provided with automatic alternation system. Each compressor motor shall be provided with an across-the-line-type magnetic controller, complete with low-voltage release. An intake air filter and silencer shall be provided with each compressor. Aftercooler and moisture separator shall be installed between compressors and air receiver to remove moisture and oil condensates before the air enters the receiver. Aftercoolers shall be air-cooled. The air shall pass through a sufficient number of tubes to affect cooling. Tubes shall be sized to give maximum heat transfer. Cooling capacity of the aftercooler shall be sized for the total capacity of the compressors. Means shall be provided for draining condensed moisture from the receiver by an automatic float type trap. Capacities of air compressors and receivers shall be as indicated.

2.12.2 Air Receivers

Receivers shall be designed for 200 psi working pressure. Receivers shall be factory air tested to 1-1/2 times the working pressure. Receivers shall be equipped with safety relief valves and accessories, including pressure gauges and automatic and manual drains. The outside of air receivers may be galvanized or supplied with commercial enamel finish. Receivers shall be designed and constructed in accordance with ASME BPV VIII Div 1 and shall have the design working pressures specified herein. A display of the ASME seal on the receiver or a certified test report from an approved independent testing laboratory indicating conformance to the ASME Code shall be provided.

2.12.3 Intake Air Supply Filter

Dry type air filter shall be provided having a collection efficiency of 99 percent of particles larger than 10 microns. Filter body and media shall withstand a maximum 125 psi, capacity as indicated.

2.12.4 Pressure Regulators

The air system shall be provided with the necessary regulator valves to maintain the desired pressure for the installed equipment. Regulators shall be designed for a maximum inlet pressure of 125 psi and a maximum temperature of 200 degrees F. Regulators shall be single-seated, pilot-operated with valve plug, bronze body and trim or equal, and threaded

connections. The regulator valve shall include a pressure gauge and shall be provided with an adjustment screw for adjusting the pressure differential from 0 to 125 psi. Regulator shall be sized as indicated.

2.12.5 Quick Disconnect Couplings

All brass and suitable for a working pressure of not less than 125 psig. Female side of coupling (fixed end) shall have male thread connection with automatic shutoff. Provide male side of coupling with hose stem and ball check to bleed pressure from hose and prevent hose whipping.

2.12.6 Single Cartridge Type Filters

125 psig operating pressure and filter housing of brass or bronze. Provide cellulose cartridge filters of graded density construction capable of removing liquids and solids of 5 microns and larger. Filter capacity shall be compatible with rated flow of equipment or pressure reducing valves provided.

2.12.7 Pressure Regulators

Diaphragm type, air loaded, tight closing single seat, brass body with integral filter and bowl. Pressure regulators used to deliver compressed air for cleaning shall be factory set at not more than 30 psig and shall be nonadjustable.

2.12.8 Needle Valves

One-piece bodies with integral or screwed bonnet, stems of hardened stainless steel with fine thread for metering and ease of adjusting, teflon packing; and shall be of the pressure balanced type. Needle valves shall be of the slow opening type.

2.12.9 Pressure Gages

ASME B40.1, Accuracy Grade A, for air, with steel or brass case, and nonshatterable safety glass, and a pressure blowout back to prevent glass from flying out in case of an explosion. Gages shall have a 3-1/2 inch minimum diameter dial and a dial range of approximately twice working pressure.

2.13 DOMESTIC WATER SERVICE METER

Cold water meter shall be of the positive displacement type conforming to AWWA C700. Meter register may be round or straight reading type, indicating gallons. Meter shall be provided with a pulse generator, remote readout register and all necessary wiring and accessories.

2.14 ROOF DRAIN

Cast iron drain body and dome, adjustable with integral clamping ring. Overflow provided with 2 inch dam.

3 EXECUTION

3.1 GENERAL INSTALLATION REQUIREMENTS

Hubless cast-iron pipe shall not be installed under concrete floor slabs. Piping located in air plenums shall conform to NFPA 90A requirements. Unprotected plastic pipe shall not be installed in air plenum. Installation of plastic pipe where in compliance with NFPA may be installed in accordance with PPFA-01. The plumbing system shall be installed complete with necessary fixtures, fittings, traps, valves, and accessories. Water and drainage piping shall be extended 5 feet outside the building, unless otherwise indicated. A gate valve shall be installed on the water service line inside the building approximately 6 inches mm above the floor from point of entry. Piping shall be connected to the building main water supply line. Sewer and water pipes shall be laid in separate trenches, except when otherwise shown. Exterior underground utilities shall be at least 12 inches below the average local frost depth or as indicated on the drawings. If trenches are closed or the pipes are otherwise covered before being connected to the service lines, the location of the end of each plumbing utility shall be marked with a stake or other acceptable means. Valves shall be installed with control no lower than the valve body.

3.1.1 Water Pipe, Fittings, and Connections

3.1.1.1 Utilities

The piping shall be extended to fixtures, outlets, and equipment. The hot-water and cold-water piping system shall be arranged and installed to permit draining. The supply line to each item of equipment or fixture, except faucets, flush valves, or other control valves which are supplied with integral stops, shall be equipped with a shutoff valve to enable isolation of the item for repair and maintenance without interfering with operation of other equipment or fixtures. Supply piping to fixtures, faucets, hydrants, shower heads, and flushing devices shall be anchored to prevent movement.

3.1.1.2 Cutting and Repairing

The work shall be carefully laid out in advance, and unnecessary cutting of construction shall be avoided. Damage to building, piping, wiring, or equipment as a result of cutting shall be repaired by mechanics skilled in the trade involved.

3.1.1.3 Protection of Fixtures, Materials, and Equipment

Pipe openings shall be closed with caps or plugs during installation. Fixtures and equipment shall be tightly covered and protected against dirt, water, chemicals, and mechanical injury. Upon completion of the work, the fixtures, materials, and equipment shall be thoroughly cleaned, adjusted, and operated. Safety guards shall be provided for exposed rotating equipment.

3.1.1.4 Mains, Branches, and Runouts

Piping shall be installed as indicated. Pipe shall be accurately cut and worked into place without springing or forcing. Structural portions of the building shall not be weakened. Aboveground piping shall run parallel with the lines of the building, unless otherwise indicated. Branch pipes from

service lines may be taken from top, bottom, or side of main, using crossover fittings required by structural or installation conditions. Supply pipes, valves, and fittings shall be kept a sufficient distance from other work and other services to permit not less than 1/2 inch between finished covering on the different services. Bare and insulated water lines shall not bear directly against building structural elements so as to transmit sound to the structure or to prevent flexible movement of the lines. Water pipe shall not be buried in or under floors. Changes in pipe sizes shall be made with reducing fittings. Use of bushings will not be permitted except for use in situations in which standard factory fabricated components are furnished to accommodate specific excepted installation practice. Change in direction shall be made with fittings, except that bending of pipe 4 inches and smaller will be permitted, provided a pipe bender is used and wide sweep bends are formed. The center-line radius of bends shall be not less than six diameters of the pipe. Bent pipe showing kinks, wrinkles, flattening, or other malformations will not be acceptable.

3.1.1.5 Pipe Drains

Pipe drains indicated shall consist of 3/4 inch hose bibb with renewable seat and ball valve ahead of hose bibb. At other low points, 3/4 inch brass plugs or caps shall be provided. Disconnection of the supply piping at the fixture is an acceptable drain.

3.1.1.6 Expansion and Contraction of Piping

Allowance shall be made throughout for expansion and contraction of water pipe. Each hot-water and hot-water circulation riser shall have expansion loops or other provisions such as offsets, changes in direction, etc., where indicated and/or required. Risers shall be securely anchored as required or where indicated to force expansion to loops. Branch connections from risers shall be made with ample swing or offset to avoid undue strain on fittings or short pipe lengths. Horizontal runs of pipe over 1/2 inch in length shall be anchored to the wall or the supporting construction about midway on the run to force expansion, evenly divided, toward the ends. Sufficient flexibility shall be provided on branch runouts from mains and risers to provide for expansion and contraction of piping. Flexibility shall be provided by installing one or more turns in the line so that piping will spring enough to allow for expansion without straining. If mechanical grooved pipe coupling systems are provided, the deviation from design requirements for expansion and contraction may be allowed pending approval of Contracting Officer.

3.1.1.7 Commercial-Type Water Hammer Arresters

Commercial-type water hammer arresters shall be provided on hot- and cold-water supplies and shall be located as generally indicated, with precise location and sizing to be in accordance with PDI WH 201 and as indicated. Water hammer arresters, where concealed, shall be accessible by means of access doors or removable panels. Commercial-type water hammer arresters shall conform to PDI WH 201. Vertical capped pipe columns will not be permitted.

3.1.2 Compressed Air Piping (Non-Oil Free)

Compressed air piping shall be installed as specified for water piping and suitable for 125 psig working pressure. Compressed air piping shall have

supply lines and discharge terminals legibly and permanently marked at both ends with the name of the system and the direction of flow.

3.1.3 Joints

Installation of pipe and fittings shall be made in accordance with the manufacturer's recommendations. Mitering of joints for elbows and notching of straight runs of pipe for tees will not be permitted. Joints shall be made up with fittings of compatible material and made for the specific purpose intended.

3.1.3.1 Threaded

Threaded joints shall have American Standard taper pipe threads conforming to ASME B1.20.1. Only male pipe threads shall be coated with graphite or with an approved graphite compound, or with an inert filler and oil, or shall have a polytetrafluoroethylene tape applied.

3.1.3.2 Mechanical Couplings

Grooved mechanical joints shall be prepared according to the coupling manufacturer's instructions. Pipe and groove dimensions shall comply with the tolerances specified by the coupling manufacturer. The diameter of grooves made in the field shall be measured using a "go/no-go" gauge, vernier or dial caliper, or narrow-land micrometer. Groove width and dimension of groove from end of the pipe shall be measured and recorded for each change in grooving tool setup to verify compliance with coupling manufacturer's tolerances. Grooved joints shall not be used in concealed locations.

3.1.3.3 Union and Flanged

Unions, flanges and mechanical couplings shall not be concealed in walls, ceilings, or partitions. Unions shall be used on pipe sizes 2-1/2 inches and smaller; flanges shall be used on pipe sizes 3 inches and larger.

3.1.3.4 Cast Iron Soil, Waste and Vent Pipe

Bell and spigot compression and hubless gasketed clamp joints for soil, waste and vent piping shall be installed per the manufacturer's recommendations.

3.1.3.5 Copper Tube and Pipe

The tube or fittings shall not be annealed when making connections. Connections shall be made with a multiflame torch.

a. Brazed. Brazed joints shall be made in conformance with AWS B2.2, MSS SP-73, and CDA 404/O-RR with flux and are acceptable for line sizes. Copper to copper joints shall include the use of copper-phosphorus or copper-phosphorus-silver brazing metal without flux. Brazing of dissimilar metals (copper to bronze or brass) shall include the use of flux with either a copper-phosphorus, copper-phosphorus-silver or a silver brazing filler metal.

b. Soldered. Soldered joints shall be made with flux and are only acceptable for lines 2 inches and smaller. Soldered joints shall conform to ASME B31.5 and CDA 404/O-RR.

c. Copper Tube Extracted Joint. An extracted mechanical joint may be made in copper tube. Joint shall be produced with an appropriate tool by drilling a pilot hole and drawing out the tube surface to form a collar having a minimum height of three times the thickness of the tube wall. To prevent the branch tube from being inserted beyond the depth of the extracted joint, dimpled depth stops shall be provided. Branch tube shall be notched for proper penetration into fitting to ensure a free flow joint. Extracted joints shall be brazed in accordance with NAPHCC-01 using B-Cup series filler metal in accordance with MSS SP-73. Soldered extracted joints will not be permitted.

3.1.3.6 Other Joint Methods

3.1.4 Dissimilar Pipe Materials

Connections between ferrous and non-ferrous copper pipe shall be made with dielectric unions or flange waterways. Connecting joints between plastic and metallic pipe shall be made with transition fitting for the specific purpose.

3.1.5 Corrosion Protection for Buried Pipe and Fittings

3.1.5.1 Cast Iron and Ductile Iron

Pressure pipe shall have protective coating, a cathodic protection system, and joint bonding. Pipe, fittings, and joints shall have a protective coating. Joints and fittings shall be cleaned, coated with primer, and wrapped with tape. The pipe shall be cleaned, coated, and wrapped prior to pipe tightness testing. Joints and fittings shall be cleaned, coated, and wrapped after pipe tightness testing. Tape shall conform to AWWA C203 and shall be applied with a 50 percent overlap. Primer shall be as recommended by the tape manufacturer.

3.1.5.2 Steel

Steel pipe, joints, and fittings shall be cleaned, coated with primer, and wrapped with tape. Pipe shall be cleaned, coated, and wrapped prior to pipe tightness testing. Joints and fittings shall be cleaned, coated, and wrapped after pipe tightness testing. Tape shall conform to AWWA C203 and shall be applied with a 50 percent overlap. Primer shall be as recommended by the tape manufacturer.

3.1.6 Pipe Sleeves and Flashing

Pipe sleeves shall be furnished and set in their proper and permanent location.

3.1.6.1 Sleeve Requirements

Pipes passing through concrete or masonry walls or concrete floors or roofs shall be provided with pipe sleeves fitted into place at the time of construction. Sleeves are not required for cast-iron soil pipe passing

through concrete slab on grade, except where penetrating a membrane waterproof floor. A modular mechanical type sealing assembly may be installed in lieu of a waterproofing clamping flange and caulking and sealing of annular space between pipe and sleeve. The seals shall consist of interlocking synthetic rubber links shaped to continuously fill the annular space between the pipe and sleeve with corrosion-protected carbon steel bolts, nuts, and pressure plates. The links shall be loosely assembled with bolts to form a continuous rubber belt around the pipe with a pressure plate under each bolt head and each nut. After the seal assembly is properly positioned in the sleeve, tightening of the bolt shall cause the rubber sealing elements to expand and provide a watertight seal between the pipe and the sleeve. Each seal assembly shall be sized as recommended by the manufacturer to fit the pipe and sleeve involved. Sleeves shall not be installed in structural members, except where indicated or approved. Rectangular and square openings shall be as detailed. Each sleeve shall extend through its respective floor, or roof, and shall be cut flush with each surface, except for special circumstances. Pipe sleeves passing through floors in wet areas such as mechanical equipment rooms, lavatories, and other plumbing fixture areas shall extend a minimum of 4 inches above the finished floor. Unless otherwise indicated, sleeves shall be of a size to provide a minimum of 1/4 inch clearance between bare pipe and inside of sleeve or between jacket over insulation and sleeves. Sleeves in bearing walls shall be steel pipe or cast-iron pipe. Sleeves for membrane waterproof floors shall be steel pipe, cast-iron pipe, or plastic pipe. Membrane clamping devices shall be provided on pipe sleeves for waterproof floors. Sleeves in nonbearing walls or ceilings may be steel pipe, cast-iron pipe, galvanized sheet metal with lock-type longitudinal seam, or moisture-resistant fiber or plastic. Plastic sleeves shall not be used in nonbearing fire walls, roofs, or floor/ceilings. Except as otherwise specified, the annular space between pipe and sleeve, or between jacket over insulation and sleeve, shall be sealed as indicated with sealants conforming to ASTM C 920 and with a primer, backstop material and surface preparation as specified in Section 07920 JOINT SEALING. Pipes passing through sleeves in concrete floors over crawl spaces shall be sealed as specified above. The annular space between pipe and sleeve or between jacket over insulation and sleeve shall not be sealed for interior walls which are not designated as fire rated. Sleeves through below-grade walls in contact with earth shall be recessed 1/2 inch from wall surfaces on both sides. Annular space between pipe and sleeve shall be filled with backing material and sealants in the joint between the pipe and concrete wall as specified above. Sealant selected for the earth side of the wall shall be compatible with dampproofing/waterproofing materials that are to be applied over the joint sealant.

3.1.6.2 Flashing Requirements

Pipes passing through roof or floor waterproofing membrane shall be installed through a 16 ounce copper flashing, each within an integral skirt or flange. Flashing shall be suitably formed, and the skirt or flange shall extend not less than 8 inches from the pipe and shall be set over the roof or floor membrane in a solid coating of bituminous cement. The flashing shall extend up the pipe a minimum of 10 inches. For cleanouts, the flashing shall be turned down into the hub and caulked after placing the ferrule. Pipes passing through pitched roofs shall be flashed, using lead or copper flashing, with an adjustable integral flange of adequate size to extend not less than 8 inches from the pipe in all directions and lapped into the roofing to provide a watertight seal. The annular space between

the flashing and the bare pipe or between the flashing and the metal-jacket-covered insulation shall be sealed as indicated. Flashing for dry vents shall be turned down into the pipe to form a waterproof joint. Pipes, up to and including 10 inches in diameter, passing through roof or floor waterproofing membrane may be installed through a cast-iron sleeve with caulking recess, anchor lugs, flashing-clamp device, and pressure ring with brass bolts. Flashing shield shall be fitted into the sleeve clamping device. Pipes passing through wall waterproofing membrane shall be sleeved as described above. A waterproofing clamping flange shall be installed.

3.1.6.3 Waterproofing

Waterproofing at floor-mounted water closets shall be accomplished by forming a flashing guard from soft-tempered sheet copper. The center of the sheet shall be perforated and turned down approximately 1-1/2 inches to fit between the outside diameter of the drainpipe and the inside diameter of the cast-iron or steel pipe sleeve. The turned-down portion of the flashing guard shall be embedded in sealant to a depth of approximately 1-1/2 inches; then the sealant shall be finished off flush to floor level between the flashing guard and drainpipe. The flashing guard of sheet copper shall extend not less than 8 inches from the drainpipe and shall be lapped between the floor membrane in a solid coating of bituminous cement. If cast-iron water closet floor flanges are used, the space between the pipe sleeve and drainpipe shall be sealed with sealant and the flashing guard shall be upturned approximately 1-1/2 inches to fit the outside diameter of the drainpipe and the inside diameter of the water closet floor flange. The upturned portion of the sheet fitted into the floor flange shall be sealed.

3.1.6.4 Optional Counterflashing

Instead of turning the flashing down into a dry vent pipe, or caulking and sealing the annular space between the pipe and flashing or metal-jacket-covered insulation and flashing, counterflashing may be accomplished by utilizing the following:

a. A standard roof coupling for threaded pipe up to 6 inches in diameter.

b. A tack-welded or banded-metal rain shield around the pipe.

3.1.6.5 Pipe Penetrations of Slab on Grade Floors

Where pipes, fixture drains, floor drains, cleanouts or similar items penetrate slab on grade floors, except at penetrations of floors with waterproofing membrane as specified in paragraphs Flashing Requirements and Waterproofing, a groove 1/4 to 1/2 inches wide by 1/4 to 3/8 inches deep shall be formed around the pipe, fitting or drain. The groove shall be filled with a sealant as specified in Section 07920 JOINT SEALING.

3.1.7 Fire Seal

Where pipes pass through fire walls, fire-partitions, fire-rated pipe chase walls or floors above grade, a fire seal shall be provided as specified in Section 07270 FIRESTOPPING.

3.1.8 Supports

3.1.8.1 General

Hangers used to support piping 50 mm and larger shall be fabricated to permit adequate adjustment after erection while still supporting the load. Pipe guides and anchors shall be installed to keep pipes in accurate alignment, to direct the expansion movement, and to prevent buckling, swaying, and undue strain. Piping subjected to vertical movement when operating temperatures exceed ambient temperatures shall be supported by variable spring hangers and supports or by constant support hangers. In the support of multiple pipe runs on a common base member, a clip or clamp shall be used where each pipe crosses the base support member. Spacing of the base support members shall not exceed the hanger and support spacing required for an individual pipe in the multiple pipe run.

3.1.8.2 Pipe Supports and Structural Bracing, Seismic Requirements

Piping and attached valves shall be supported and braced to resist seismic loads as shown. Structural steel required for reinforcement to properly support piping, headers, and equipment, but not shown, shall be provided. Material used for supports shall be as specified in Section 05120 STRUCTURAL STEEL.

3.1.8.3 Pipe Hangers, Inserts, and Supports

Installation of pipe hangers, inserts and supports shall conform to MSS SP-58 and MSS SP-69, except as modified herein.

a. Types 5, 12, and 26 shall not be used.

b. Type 3 shall not be used on insulated pipe.

c. Type 18 inserts shall be secured to concrete forms before concrete is placed. Continuous inserts which allow more adjustment may be used if they otherwise meet the requirements for type 18 inserts.

d. Type 19 and 23 C-clamps shall be torqued per MSS SP-69 and shall have both locknuts and retaining devices furnished by the manufacturer. Field-fabricated C-clamp bodies or retaining devices are not acceptable.

e. Type 20 attachments used on angles and channels shall be furnished with an added malleable-iron heel plate or adapter.

f. Type 24 may be used only on trapeze hanger systems or on fabricated frames.

g. Type 40 shields shall:

(1) Be used on insulated pipe less than 4 inches.

(2) Be used on insulated pipe 4 inches and larger when the temperature of the medium is 60 degrees F or less.

(3) Have a high density insert for pipe 2 inches and larger and for smaller pipe sizes when the insulation is suspected of being

visibly compressed, or distorted at or near the shield/insulation interface. High density inserts shall have a density of 8 pcf or greater.

h. Horizontal pipe supports shall be spaced as specified in MSS SP-69 and a support shall be installed not over 1 foot from the pipe fitting joint at each change in direction of the piping. Pipe supports shall be spaced not over 5 feet apart at valves. Operating temperatures in determining hanger spacing for PVC or CPVC pipe shall be 120 degrees F for PVC and 180 degrees F for CPVC. Horizontal pipe runs shall include allowances for expansion and contraction.

i. Vertical pipe shall be supported at each floor, except at slab-on-grade, at intervals of not more than 15 feet nor more than 8 feet from end of risers, and at vent terminations. Vertical pipe risers shall include allowances for expansion and contraction.

j. Type 40 shields used on insulated pipe shall have high density inserts with a density of 8 pcf or greater.

k. Type 35 guides using steel, reinforced polytetrafluoroethylene (PTFE) or graphite slides shall be provided to allow longitudinal pipe movement. Slide materials shall be suitable for the system operating temperatures, atmospheric conditions, and bearing loads encountered. Lateral restraints shall be provided as needed. Where steel slides do not require provisions for lateral restraint the following may be used:

(1) On pipe 4 inches and larger when the temperature of the medium is 60 degrees F or higher, a Type 39 saddle, welded to the pipe, may freely rest on a steel plate.

(2) On pipe less than 4 inches a Type 40 shield, attached to the pipe or insulation, may freely rest on a steel plate.

(3) On pipe 4 inches and larger carrying medium less that 60 degrees F a Type 40 shield, attached to the pipe or insulation, may freely rest on a steel plate.

l. Pipe hangers on horizontal insulated pipe shall be the size of the outside diameter of the insulation. The insulation shall be continuous through the hanger on all pipe sizes and applications.

m. Where there are high system temperatures and welding to piping is not desirable, the Type 35 guide shall include a pipe cradle, welded to the guide structure and strapped securely to the pipe. The pipe shall be separated from the slide material by at least 4 inches or by an amount adequate for the insulation, whichever is greater.

n. Hangers and supports for plastic pipe shall not compress, distort, cut or abrade the piping, and shall allow free movement of pipe except where otherwise required in the control of expansion/contraction.

3.1.9 Pipe Cleanouts

Pipe cleanouts shall be the same size as the pipe except that cleanout plugs larger than 4 inches will not be required. A cleanout installed in connection with cast-iron soil pipe shall consist of a long-sweep 1/4 bend or one or two 1/8 bends extended to the place shown. An extra-heavy cast-brass or cast-iron ferrule with countersunk cast-brass head screw plug shall be caulked into the hub of the fitting and shall be flush with the floor. Cleanouts in connection with other pipe, where indicated, shall be T-pattern, 90-degree branch drainage fittings with cast-brass screw plugs. Plugs shall be the same size as the pipe up to and including 4 inches. Cleanout tee branches with screw plug shall be installed at the foot of soil and waste stacks, at the foot of interior downspouts, on each connection to building storm drain where interior downspouts are indicated, and on each building drain outside the building. Cleanout tee branches may be omitted on stacks in single story buildings with slab-on-grade construction or where less than 18 inches of crawl space is provided under the floor. Cleanouts on pipe concealed in partitions shall be provided with chromium plated bronze, nickel bronze, nickel brass or stainless steel flush type access cover plates. Round access covers shall be provided and secured to plugs with securing screw. Square access covers may be provided with matching frames, anchoring lugs and cover screws. Cleanouts in finished walls shall have access covers and frames installed flush with the finished wall. Cleanouts installed in finished floors subject to foot traffic shall be provided with a chrome-plated cast brass, nickel brass, or nickel bronze cover secured to the plug or cover frame and set flush with the finished floor. Heads of fastening screws shall not project above the cover surface. Where cleanouts are provided with adjustable heads, the heads shall be cast iron.

3.2 WATER HEATERS AND HOT WATER STORAGE TANKS

3.2.1 Relief Valves

No valves shall be installed between a relief valve and its water heater or storage tank. The P&T relief valve shall be installed where the valve actuator comes in contact with the hottest water in the heater. Whenever possible, the relief valve shall be installed directly in a tapping in the tank or heater; otherwise, the P&T valve shall be installed in the hot-water outlet piping. A vacuum relief valve shall be provided on the cold water supply line to the hot-water storage tank or water heater and mounted above and within 6 inches above the top of the tank or water heater.

3.2.2 Installation of Gas-Fired Water Heaters

Installation shall conform to NFPA 54 for gas fired and NFPA 31 for oil fired. Storage water heaters that are not equipped with integral heat traps and having vertical pipe risers shall be installed with heat traps directly on both the inlet and outlet. Circulating systems need not have heat traps installed. An acceptable heat trap may be a piping arrangement such as elbows connected so that the inlet and outlet piping make vertically upward runs of not less than 24 inches just before turning downward or directly horizontal into the water heater's inlet and outlet fittings. Commercially available heat traps, specifically designed by the manufacturer for the purpose of effectively restricting the natural tendency of hot water to rise through vertical inlet and outlet piping during standby periods may also be approved.

3.2.3 Connections to Water Heaters

Connections of metallic pipe to water heaters shall be made with dielectric unions or flanges.

3.3 FIXTURES AND FIXTURE TRIMMINGS

Angle stops, straight stops, stops integral with the faucets, or concealed type of lock-shield, and loose-key pattern stops for supplies with threaded, sweat or solvent weld inlets shall be furnished and installed with fixtures. Where connections between copper tubing and faucets are made by rubber compression fittings, a beading tool shall be used to mechanically deform the tubing above the compression fitting. Exposed traps and supply pipes for fixtures and equipment shall be connected to the rough piping systems at the wall, unless otherwise specified under the item. Floor and wall escutcheons shall be as specified. Drain lines and hot water lines of fixtures for handicapped personnel shall be insulated and do not require polished chrome finish. Plumbing fixtures and accessories shall be installed within the space shown.

3.3.1 Fixture Connections

Where space limitations prohibit standard fittings in conjunction with the cast-iron floor flange, special short-radius fittings shall be provided. Connections between earthenware fixtures and flanges on soil pipe shall be made gastight and watertight with a closet-setting compound or neoprene gasket and seal. Use of natural rubber gaskets or putty will not be permitted. Fixtures with outlet flanges shall be set the proper distance from floor or wall to make a first-class joint with the closet-setting compound or gasket and fixture used.

3.3.2 Flushometer Valves

Flushometer valves shall be secured to prevent movement by anchoring the long finished top spud connecting tube to wall adjacent to valve with approved metal bracket. Flushometer valves for water closets shall be installed 39 inches above the floor.

3.3.3 Height of Fixture Rims Above Floor

Lavatories shall be mounted with rim 30-1/2 inches inches above finished floor. Wall-hung drinking fountains and water coolers shall be installed with rim 42 inches above floor. Installation of fixtures for use by the physically handicapped shall be in accordance with CABO A117.1.

3.3.4 Shower Bath Outfits

The area around the water supply piping to the mixing valves and behind the escutcheon plate shall be made watertight by caulking or gasketing.

3.3.5 Fixture Supports

Fixture supports for off-the-floor lavatories, urinals, water closets, and other fixtures of similar size, design, and use, shall be of the chair-carrier type. The carrier shall provide the necessary means of mounting the fixture, with a foot or feet to anchor the assembly to the floor slab.

Adjustability shall be provided to locate the fixture at the desired height and in proper relation to the wall. Support plates, in lieu of chair carrier, shall be fastened to the wall structure only where it is not possible to anchor a floor-mounted chair carrier to the floor slab.

3.3.5.1 Support for Steel Stud Frame Partitions

Chair carrier shall be used. The anchor feet and tubular uprights shall be of the heavy duty design; and feet (bases) shall be steel and welded to a square or rectangular steel tube upright. Wall plates, in lieu of floor-anchored chair carriers, shall be used only if adjoining steel partition studs are suitably reinforced to support a wall plate bolted to these studs.

3.3.5.2 Wall-Mounted Water Closet Gaskets

Where wall-mounted water closets are provided, reinforced wax, treated felt, or neoprene gaskets shall be provided. The type of gasket furnished shall be as recommended by the chair-carrier manufacturer.

3.3.6 Backflow Prevention Devices

Plumbing fixtures, equipment, and pipe connections shall not cross connect or interconnect between a potable water supply and any source of nonpotable water. Backflow preventers shall be installed where indicated and in accordance with NAPHCC-01 at all other locations necessary to preclude a cross-connect or interconnect between a potable water supply and any nonpotable substance. In addition backflow preventers shall be installed at all locations where the potable water outlet is below the flood level of the equipment, or where the potable water outlet will be located below the level of the nonpotable substance. Backflow preventers shall be located so that no part of the device will be submerged. Backflow preventers shall be of sufficient size to allow unrestricted flow of water to the equipment, and preclude the backflow of any nonpotable substance into the potable water system. Access shall be provided for maintenance and testing. Each device shall be a standard commercial unit.

3.3.7 Access Panels

Access panels shall be provided for concealed valves and controls, or any item requiring inspection or maintenance. Access panels shall be of sufficient size and located so that the concealed items may be serviced, maintained, or replaced. Access panels shall be as specified in Section 05500 MISCELLANEOUS METAL.

3.3.8 Sight Drains

Sight drains shall be installed so that the indirect waste will terminate 2 inches above the flood rim of the funnel to provide an acceptable air gap.

3.3.9 Traps

Each trap shall be placed as near the fixture as possible, and no fixture shall be double-trapped. Traps installed on cast-iron soil pipe shall be cast iron. Traps installed on steel pipe or copper tubing shall be recess-drainage pattern, or brass-tube type. Traps installed on plastic pipe may be plastic conforming to ASTM D 3311. Traps for acid-resisting waste shall be of the same material as the pipe.

3.3.10 Shower Pans

Before installing shower pan, subfloor shall be free of projections such as nail heads or rough edges of aggregate. Drain shall be a bolt-down, clamping-ring type with weepholes, installed so the lip of the subdrain is flush with subfloor.

3.3.10.1 General

The floor of each individual shower, the shower-area portion of combination shower and drying room, and the entire shower and drying room where the two are not separated by curb or partition, shall be made watertight with a shower pan fabricated in place. The shower pan material shall be cut to size and shape of the area indicated, in one piece to the maximum extent practicable, allowing a minimum of 6 inches for turnup on walls or partitions, and shall be folded over the curb with an approximate return of 1/4 of curb height. The upstands shall be placed behind any wall or partition finish. Subflooring shall be smooth and clean, with nailheads driven flush with surface, and shall be sloped to drain. Shower pans shall be clamped to drains with the drain clamping ring.

3.3.10.2 Metal Shower Pans

When a shower pan of required size cannot be furnished in one piece, metal pieces shall be joined with a flatlock seam and soldered or burned. The corners shall be folded, not cut, and the corner seam shall be soldered or burned. Pans, including upstands, shall be coated on all surfaces with one brush coat of asphalt. Asphalt shall be applied evenly at not less than 1 gallon per 50 square feet. A layer of felt covered with building paper shall be placed between shower pans and wood floors. The joining surfaces of metal pan and drain shall be given a brush coat of asphalt after the pan is connected to the drain.

3.3.10.3 Nonplasticized Chlorinated Polyethylene Shower Pans

Corners of nonplasticized chlorinated polyethylene shower pans shall be folded against the upstand by making a pig-ear fold. Hot-air gun or heat lamp shall be used in making corner folds. Each pig-ear corner fold shall be nailed or stapled 1/2 inch from the upper edge to hold it in place. Nails shall be galvanized large-head roofing nails. On metal framing or studs, approved duct tape shall be used to secure pig-ear fold and membrane. Where no backing is provided between the studs, the membrane slack shall be taken up by pleating and stapling or nailing to studding 1/2 inch from upper edge. To adhere the membrane to vertical surfaces, the back of the membrane and the surface to which it will be applied shall be coated with adhesive that becomes dry to the touch in 5 to 10 minutes, after which the membrane shall be pressed into place. Surfaces to be solvent-welded shall be clean. Surfaces to be joined with xylene shall be initially sprayed and vigorously cleaned with a cotton cloth, followed by final coating of xylene and the joining of the surfaces by roller or equivalent means. If ambient or membrane temperatures are below 39 degrees F the membrane and the joint shall be heated prior to application of xylene. Heat may be applied with hot-air gun or heat lamp, taking precautions not to scorch the membrane. Adequate ventilation and wearing of gloves are required when working with xylene. Membrane shall be pressed into position on the drain body, and shall be cut and fit to match so that membrane can be properly clamped and

an effective gasket-type seal provided. On wood subflooring, two layers of .15 pound per square foot dry felt shall be installed prior to installation of shower pan to ensure a smooth surface for installation.

3.4 IDENTIFICATION SYSTEMS

3.4.1 Identification Tags

Identification tags made of brass, engraved laminated plastic, or engraved anodized aluminum, indicating service and valve number shall be installed on valves, except those valves installed on supplies at plumbing fixtures. Tags shall be 1-3/8 inch minimum diameter, and marking shall be stamped or engraved. Indentations shall be black, for reading clarity. Tags shall be attached to valves with No. 12 AWG, copper wire, chrome-plated beaded chain, or plastic straps designed for that purpose.

3.4.2 Color Coding

Color coding for piping identification shall be as specified in Section 09900 PAINTING, GENERAL.

3.5 ESCUTCHEONS

Escutcheons shall be provided at finished surfaces where bare or insulated piping, exposed to view, passes through floors, walls, or ceilings, except in boiler, utility, or equipment rooms. Escutcheons shall be fastened securely to pipe or pipe covering and shall be satin-finish, corrosion-resisting steel, polished chromium-plated zinc alloy, or polished chromium-plated copper alloy. Escutcheons shall be either one-piece or split-pattern, held in place by internal spring tension or setscrew.

3.6 PAINTING

Painting of pipes, hangers, supports, and other iron work, either in concealed spaces or exposed spaces, is specified in Section 09900 PAINTING, GENERAL.

3.7 TESTS, FLUSHING, AND STERILIZATION

3.7.1 Plumbing System

The plumbing system shall be tested in accordance with NAPHCC-01.

3.7.1.1 Shower Pans

After installation of the pan and finished floor, the drain shall be temporarily plugged below the weep holes. The floor area shall be flooded with water to a minimum depth of 1 inch for a period of 24 hours. Any drop in the water level during test, except for evaporation, will be reason for rejection, repair, and retest.

3.7.2 Defective Work

If inspection or test shows defects, such defective work or material shall be replaced or repaired as necessary and inspection and tests shall be repeated. Repairs to piping shall be made with new materials. Caulking of screwed joints or holes will not be permitted.

3.7.3 System Flushing

After tests are completed, potable water piping shall be flushed. In general, sufficient water shall be used to produce a minimum water velocity of 2.5 feet per second through piping being flushed. Flushing shall be continued until discharge water shows no discoloration. System shall be drained at low points. Strainer screens shall be removed, cleaned, and replaced in line. After flushing and cleaning, systems shall be prepared for service by immediately filling water piping with clean, fresh potable water. Any stoppage, discoloration, or other damage to the finish, furnishings, or parts of the building due to the Contractor's failure to properly clean the piping system shall be repaired by the Contractor. When the work is complete, the hot-water system shall be adjusted for uniform circulation. Flushing devices and automatic control systems shall be adjusted for proper operation.

3.7.4 Sterilization

After pressure tests have been made, the entire domestic hot- and cold-water distribution system shall be sterilized. System shall be thoroughly flushed with water of sufficient velocity until all entrained dirt and other foreign material have been removed, before introducing chlorinating material. The chlorinating material shall be hypochlorites or liquid chlorine. Water chlorination procedure shall be in accordance with AWWA M20. The chlorinating material shall be fed into the water piping system at a constant rate at a concentration of at least 50 parts per million (ppm). A properly adjusted hypochlorite solution injected into the main with a hypochlorinator, or liquid chlorine injected into the main through a solution-feed chlorinator and booster pump, shall be used. The chlorine residual shall be checked at intervals to ensure that the proper level is maintained. Chlorine application shall continue until the entire main is filled. The water shall remain in the system for a minimum of 24 hours. Each valve in the system being sterilized shall be opened and closed several times during the contact period to ensure its proper disinfection. Following the 24-hour period, no less than 25 ppm chlorine residual shall remain in the system. Water tanks shall be disinfected by the addition of chlorine directly to the filling water. Following a 6 hour period, no less than 50 ppm chlorine residual shall remain in the tank. The system including the tanks shall then be flushed with clean water until the residual chlorine is reduced to less than one part per million. During the flushing period each valve and faucet shall be opened and closed several times. From several points in the system the Contracting Officer will take samples of water in properly sterilized containers for bacterial examination. The samples of water shall be tested for total coliform organisms (coliform bacteria, fecal coliform, streptococcal, and other bacteria) in accordance with AWWA-10062J4. The testing method used shall be either the multiple-tube fermentation technique or the membrane-filter technique. The sterilizing shall be repeated until tests indicate the absence of coliform organisms (zero mean coliform density per 100 milliliters) in the samples for at least 2 full days. The system will not be accepted until satisfactory bacteriological results have been obtained.

3.8 PLUMBING FIXTURE SCHEDULE

P-1 WATER CLOSET:

Siphon-jet, elongated bowl, top supply spud, ASME A112.19.2M, wall mounted. Floor flange shall be copper alloy, cast iron, or plastic.

Gasket shall be wax type.

Seat - CID A-A-238, Type A, white plastic, elongated, open front.

Flushometer Valve - ASSE 1037, large diaphragm type with non-hold-open feature, backcheck angle control stop, and vacuum breaker. Minimum upper chamber inside diameter of not less than 2-5/8 inches at the point where the diaphragm is sealed between the upper and lower chambers. The maximum water use shall be 1.6 gallons per flush. Provide trap primer connection fitting where indicated.

P-1A WATER CLOSET HANDICAPPED:

Top rim of bowl shall be 18 inches above the floor; other features are the same as WC-1.

P-2 URINAL:

Wall hanging, with integral trap and extended shields, ASME A112.19.2M washout. Top supply connection, back outlet.

Flushometer Valve - Similar to Flushometer Valve for P-1. The maximum water use shall be 1 gallon per flush.

P-2A URINAL HANDICAPPED:

Rim shall be mounted at 18 inches above the floor; other features are the same as UR-1.

P-3 LAVATORY:

Manufacturer's standard sink depth, enameled cast iron ASME A112.19.1M, countertop.

Faucet - Faucets shall be single center set control, mixing type. Faucets shall have metal replaceable cartridge control unit or metal cartridge units with diaphragm which can be replaced without special tools. Valves and handles shall be copper alloy. Connection between valve and spout for center-set faucet shall be of rigid metal tubing. Spout shall be gooseneck. The flow shall be limited to 2.5 gpm at a flowing pressure of 80 psi.

Handles - Lever type. Cast, formed, or drop forged copper alloy.

Drain - Strainer shall be copper alloy or stainless steel.

P-4 COUNTER SINK:

Ledge back with holes for faucet and spout double bowl 24 by 21 inches by 7 inches deep stainless steel ASME A112.19.3M with sound deadening treatment.

Faucet and Spout - Cast or wrought copper alloy. Aerator shall have internal threads. The flow shall be limited to 2.5 gpm at a flowing water pressure of 80 psi.

Handle - Cast copper alloy, wrought copper alloy, or stainless steel. Single lever type.

Drain Assembly - Plug, cup strainer, crossbars, jam nuts, washers, couplings, stopper, etc. shall be copper alloy or stainless steel.

P-5 SERVICE SINK:

Enameled cast iron ASME A112.19.1M, copper alloy or stainless steel ASME A112.19.3M corner, floor mounted 28 inches square, 6-3/4 inches deep.

Faucet and Spout - Cast or wrought copper alloy, with top or bottom brace, with backflow preventer. Faucets shall have replaceable seat and the washer shall rotate onto the seat. Handles shall be lever type. Strainers shall have internal threads.

Drain Assembly - Plug, cup strainer, crossbars, jam nuts, washers, couplings, stopper, etc. shall be copper alloy or stainless steel.

Trap - Cast iron.

P-6 SHOWER FITTING:

Single handle pressure and temperature balancing thermostatic mixing valve, with liquid filled thermostatic motor. Valve shall be equipped with an adjustable limit stop factory set at 115 degrees F. Cast-brass body with stainless steel face plate. Provide chrome plated brass 2.5 gpm shower head with adjustable pattern.

P-8 ELECTRIC WATER COOLER:

Water cooler drinking fountains shall be self contained, conform to ARI 1010, use one of the fluorocarbon gases conforming to ARI 700 and ASHRAE 34 which has an Ozone Depletion Potential of less than or equal to 0.05, have a capacity to deliver 8 gph of water at 50 degrees F with an inlet water temperature of 80 degrees F while residing in a room environment of 90 degrees F, and have self-closing valves. Self-closing valves shall have automatic stream regulators, have a flow control capability, have a push button actuation or have a cross-shaped index metal turn handle without a hood. Exposed surfaces of stainless steel shall have No. 4 general polish finish. Spouts shall provide a flow of water at least 4 inches high so as to allow the insertion of a cup or glass under the flow of water.

Handicapped - All units shall be surface wall-mounted. The dimensions shall be 15 inches wide, 20 inches deep, with a back height of 6 to 8 inches. The unit shall clear the floor or ground by at least 8 inches. A clear knee space shall exist between the bottom of the bowl and the floor or ground of at least 27 inches and between the front edge of the bowl and the body of the unit of at least 8 inches. An 8 inch wide clear space shall exist on both sides of the unit. The spout height shall be no more than 1 m above the floor or ground to the outlet. The spout shall be at the front of the unit and direct the water flow in a trajectory that is parallel or nearly parallel to the front of the unit. The bowl shall be 6-1/2 inches high, made of corrosion resisting steel and be for interior installation.

P-9 WASH SINK:

Semicircular 35-1/4 inch by 24-3/4 inch by 9 inch deep 14 gauge stainless steel wash fountain with Type 304 stainless steel pedestal, all stainless steel polished to a #4 finish. Provide foot control valve, metal soap dispenser, and stainless steel shroud to conceal piping drops.

3.9 PERFORMANCE OF WATER HEATING EQUIPMENT

Standard rating condition terms are as follows:

EF = Energy factor, overall efficiency.

ET = Thermal efficiency with 70 degrees F delta T.

EC = Combustion efficiency, 100 percent - flue loss when smoke = o (trace is permitted).

SL = Standby loss in W/sq. ft. based on 80 degrees F delta T, or in percent per hour based on nominal 90 degrees F delta T.

HL = Heat loss of tank surface area.

V = Storage volume in liters

3.9.1 Storage Water Heaters

3.9.1.1 Gas

a. Storage capacity of 100 gallons or less, and input rating of 75,000 Btu/h or less: minimum EF shall be 0.62-0.0019V per 10 CFR 430.

b. Storage capacity of more than 100 gallons or input rating more than 75,000 Btu/h: ET shall be 77 percent; maximum SL shall be 1.3+38V, per ANSI Z21.10.3.

TABLE I
PIPE AND FITTING MATERIALS FOR
DRAINAGE, WASTE, AND VENT PIPING SYSTEMS

		SERVICE			
Item No.	Pipe and Fitting Materials	A	B	C	D
1	Cast iron soil pipe and fittings, hub and spigot, ASTM A 74 with compression gaskets	X	X	X	X
2	Cast iron pipe and fittings hubless, CISPI 301 and ASTM A 888	X	X	X	X
3	Cast iron drainage fittings, threaded, ASME B16.12 for use with Item 10	X		X	X
4	Cast iron screwed fittings (threaded) ASME B16.4 for use with Item 10				X
5	Malleable-iron threaded fittings, galvanized ASME B16.3 for use with Item 10				X
6	Steel pipe, seamless galvanized, ASTM A 53, Type S, Grade B	X			X
7	Cast copper alloy solder joint pressure fittings, ASME B16.18 for use with Item 14				X
8	Seamless copper pipe, ASTM B 42				
9	Cast bronze threaded fittings, ASME B16.15				X
10	Copper drainage tube, (DWV), ASTM B 306	X*	X	X*	X
11	Wrought copper and wrought alloy solder-joint drainage fittings. ASME B16.29	X	X	X	X
12	Cast copper alloy solder joint drainage fittings, DWV, ASME B16.23	X	X	X	X

SERVICE:

A - Underground Building Soil, Waste and Storm Drain
B - Aboveground Soil, Waste, Drain In Buildings
C - Underground Vent
D - Aboveground Vent
* - Hard Temper

TABLE II
PIPE AND FITTING MATERIALS FOR PRESSURE PIPING SYSTEMS

Item No.	Pipe and Fitting Materials	SERVICE A	SERVICE B	SERVICE C
1	Seamless copper pipe, ASTM B 42	X	X	X
2	Seamless copper water tube, ASTM B 88	X**	X**	X***
3	Cast bronze threaded fittings, ASME B16.15 for use with Items 1 and 2	X	X	X
4	Wrought copper and bronze solder-joint pressure fittings, ASME B16.22 for use with Items 1 and 2	X	X	X
5	Cast copper alloy solder-joint pressure fittings, ASME B16.18 for use with Items 1 and 2	X	X	X

A - Cold Water Aboveground

B - Hot Water 180 degrees F Maximum Aboveground

C - Cold Water Service Belowground

Indicated types are minimum wall thicknesses.

** - Type L - Hard

*** - Type K - Hard temper with brazed joints only or type K-soft temper without joints in or under floors

**** - In or under slab floors only brazed joints

TABLE III
STANDARD RATING CONDITIONS AND MINIMUM PERFORMANCE RATINGS FOR WATER HEATING EQUIPMENT

A. STORAGE WATER HEATERS

FUEL	STORAGE CAPACITY LITERS	INPUT RATING	TEST PROCEDURE	REQUIRED PERFORMANCE
Elect.	454 max.	12 kW max.	10 CFR 430	EF = 0.95-0.00132V minimum

TERMS:

EF = Energy factor, overall efficiency.
V = Storage volume in gallons

END OF SECTION

SECTION 15488

GAS PIPING SYSTEMS

1 GENERAL

1.1 REFERENCES

The publications listed below form a part of this specification to the extent referenced. The publications are referred to in the text by basic designation only.

AMERICAN GAS ASSOCIATION (AGA)

AGA-01	(1989) A.G.A. Plastic Pipe Manual for Gas Service

AMERICAN NATIONAL STANDARDS INSTITUTE

ANSI Z21.45	(1992; Z21.4a; Z21.4b) Flexible Connectors of Other Than All-Metal Construction for Gas Appliances
ANSI Z21.69	(1992; Z21.69a) Connectors for Movable Gas Appliances

AMERICAN PETROLEUM INSTITUTE (API)

API Spec 6D	(1994) Specification for Pipeline Valves (Gate, Plug, Ball, and Check Valves)

AMERICAN SOCIETY FOR TESTING AND MATERIALS (ASTM)

ASTM A 539	(1990a) Electric-Resistance-Welded Coiled Steel Tubing for Gas and Fuel Oil Lines
ASTM B 88	(1993a) Seamless Copper Water Tube
ASTM B 210	(1995) Aluminum and Aluminum-Alloy Drawn Seamless Tubes
ASTM B 241	(1995a) Aluminum and Aluminum-Alloy Seamless Pipe and Seamless Extruded Tube
ASTM B 280	(1993a) Seamless Copper Tube for Air Conditioning and Refrigeration Field Service
ASTM D 2513	(1993) Thermoplastic Gas Pressure Pipe, Tubing, and Fittings
ASTM D 2517	(1981; R 1987) Reinforced Epoxy Resin Gas Pressure Pipe and Fittings

AMERICAN SOCIETY OF MECHANICAL ENGINEERS (ASME)

ASME B1.20.1	(1983; R 1992) Pipe Threads, General Purpose (Inch)
ASME B16.3	(1992) Malleable Iron Threaded Fittings
ASME B16.5	(1988; Errata Oct 88; B16.5a) Pipe Flanges and Flanged Fittings
ASME B16.9	(1993) Factory-Made Wrought Steel Buttwelding Fittings
ASME B16.11	(1991) Forged Fittings, Socket-Welding and Threaded
ASME B16.21	(1992) Nonmetallic Flat Gaskets for Pipe Flanges
ASME B16.33	(1990) Manually Operated Metallic Gas Valves for Use in Gas Piping Systems Up to 125 psig (Sizes 1/2 through 2)
ASME B31.1	(1995) Power Piping
ASME B31.2	(1968) Fuel Gas Piping
ASME B36.10M	(1985; R 1994) Welded and Seamless Wrought Steel Pipe
ASME BPV IX	(1995; Addenda Dec 1995) Boiler and Pressure Vessel Code; Section IX, Welding and Brazing Qualifications

MANUFACTURERS STANDARDIZATION SOCIETY OF THE VALVE AND FITTINGS INDUSTRY (MSS)

MSS SP-25	(1993) Standard Marking System for Valves, Fittings, Flanges and Unions
MSS SP-58	(1993) Pipe Hangers and Supports - Materials, Design and Manufacture
MSS SP-69	(1991) Pipe Hangers and Supports - Selection and Application

NATIONAL FIRE PROTECTION ASSOCIATION (NFPA)

NFPA 54	(1992) National Fuel Gas Code
NFPA 70	(1993) National Electrical Code

STEEL STRUCTURES PAINTING COUNCIL (SSPC)

SSPC SP 6	(1991) Commercial Blast Cleaning

UNDERWRITERS LABORATORIES (UL)

UL-06	(1994; Supple) Gas and Oil Equipment Directory

1.2 GENERAL REQUIREMENTS

1.2.1 Welding

Piping shall be welded in accordance with qualified procedures using performance qualified welders and welding operators. Procedures and welders shall be qualified in accordance with ASME BPV IX. Welding procedures qualified by others, and welders and welding operators qualified by another employer may be accepted as permitted by ASME B31.1. The Contracting Officer shall be notified at least 24 hours in advance of tests and the tests shall be performed at the work site if practicable. The Contracting Officer shall be furnished with a copy of qualified procedures and a list of names and identification symbols of qualified welders and welding operators. The welder or welding operator shall apply his assigned symbol near each weld he makes as a permanent record. Structural members shall be welded in accordance with Section 05055 WELDING, STRUCTURAL.

1.2.2 Standard Products

Materials and equipment shall be the standard products of a manufacturer regularly engaged in the manufacture of the products and shall essentially duplicate items that have been in satisfactory use for at least 2 years prior to bid opening. Asbestos or products containing asbestos shall not be used. Manufacturer's descriptive data and installation instructions shall be submitted for approval for compression-type mechanical joints used in joining dissimilar materials and for insulating joints. Valves, flanges and fittings shall be marked in accordance with MSS SP-25.

1.2.3 Verification of Dimensions

The Contractor shall become familiar with all details of the work, verify all dimensions in the field, and shall advise the Contracting Officer of any discrepancy before performing the work.

1.3 SUBMITTALS

Government approval is required for submittals with a "GA" designation; submittals having an "FIO" designation are for information only. The following shall be submitted in accordance with Section 01330 SUBMITTAL PROCEDURES:

SD-01 Data

Qualifications; FIO

Qualified procedures and a list of names and identification symbols of qualified welders and welding operators.

SD-04 Drawings

Gas Piping System; FIO.

Drawings showing location, size and all branches of pipeline; location of all required shutoff valves; and instructions necessary for the installation of connectors and supports.

2 PRODUCTS

2.1 PIPE AND FITTINGS

2.1.1 Steel Pipe, Joints, and Fittings

Steel pipe shall conform to ASME B36.10M. Malleable-iron threaded fittings shall conform to ASME B16.3. Steel pipe flanges and flanged fittings including bolts, nuts, and bolt pattern shall be in accordance with ASME B16.5. Wrought steel buttwelding fittings shall conform to ASME B16.9. Socket welding and threaded forged steel fittings shall conform to ASME B16.11.

2.1.2 Sealants for Steel Pipe Threaded Joints

Joint sealing compound shall be listed in UL-06, Class 20 or less. Tetrafluoroethylene tape shall conform to UL-06.

2.1.3 Identification

Pipe flow markings and metal tags shall be provided as required.

2.1.4 Flange Gaskets

Gaskets shall be nonasbestos compressed material in accordance with ASME B16.21, 1/16 inch thickness, full face or self-centering flat ring type. The gaskets shall contain aramid fibers bonded with styrene butadiene rubber (SBR) or nitrile butadiene rubber (NBR) suitable for a maximum 600 degrees F service. NBR binder shall be used for hydrocarbon service.

2.1.5 Pipe Threads

Pipe threads shall conform to ASME B1.20.1.

2.1.6 Escutcheons

Escutcheons shall be chromium-plated steel or chromium-plated brass, either one piece or split pattern, held in place by internal spring tension or set screw.

2.1.7 Gas Transition Fittings

Gas transition fittings shall be manufactured steel fittings approved for jointing metallic pipe. Approved transition fittings are those that conform to AGA-01 requirements for transitions fittings.

2.1.8 Insulating Pipe Joints

2.1.8.1 Insulating Joint Material

Insulating joint material shall be provided between flanged or threaded metallic pipe systems where shown to control galvanic or electrical action.

2.1.8.2 Threaded Pipe Joints

Joints for threaded pipe shall be steel body nut type dielectric unions with insulating gaskets.

2.1.8.3 Flanged Pipe Joints

Joints for flanged pipe shall consist of full face sandwich-type flange insulating gasket of the dielectric type, insulating sleeves for flange bolts, and insulating washers for flange nuts.

2.2 VALVES

Valves shall be suitable for shutoff or isolation service and shall conform to the following:

2.2.1 Valves 2 inches and Smaller

Valves 2 inches and smaller shall conform to ASME B16.33 and shall be of materials and manufacture compatible with system materials used.

2.2.2 Valves 2-1/2 inches and Larger

Valves 2-1/2 inches and larger shall be carbon steel conforming to API Spec 6D, Class 150.

2.3 PIPE HANGERS AND SUPPORTS

Pipe hangers and supports shall conform to MSS SP-58 and MSS SP-69.

2.4 SEISMIC SHUTOFF VALVE

UL listed seismic shutoff valve designed to completely stop the flow of gas in the event of an earthquake. The sensing means of the valve shall actuate the shutoff means within 5 seconds, when subjected to a horizontal sinnsoidal oscillation having a peak acceleration of 9.65 ft/s2 and a period of 0.4 seconds. Valve shall be capable of resetting by hand.

3 EXECUTION

3.1 GAS PIPING SYSTEM

Gas piping system shall be from the point of delivery, defined as the outlet of the meter set assembly, to the connections to each gas utilization device.

3.1.1 Protection of Materials and Components

Pipe and tube openings shall be closed with caps or plugs during installation. Equipment shall be protected from dirt, water, and chemical or mechanical damage. At the completion of all work, the entire system shall be thoroughly cleaned.

3.1.2 Workmanship and Defects

Piping, tubing and fittings shall be clear and free of cutting burrs and defects in structure or threading and shall be thoroughly brushed and chip-

and scale-blown. Defects in piping, tubing or fittings shall not be repaired. When defective piping, tubing, or fittings are located in a system, the defective material shall be replaced.

3.2 PROTECTIVE COVERING

3.2.1 Aboveground Metallic Piping Systems

3.2.1.1 Ferrous Surfaces

Shop primed surfaces shall be touched up with ferrous metal primer. Surfaces that have not been shop primed shall be solvent cleaned. Surfaces that contain loose rust, loose mill scale and other foreign substances shall be mechanically cleaned by power wire brushing and primed with ferrous metal primer. Primed surface shall be finished with two coats of exterior oil paint.

3.3 INSTALLATION

Installation of the gas system shall be in conformance with the manufacturer's recommendations and applicable provisions of NFPA 54, AGA-01, and as indicated. Pipe cutting shall be done without damage to the pipe. Unless otherwise authorized, cutting shall be done by an approved type of mechanical cutter. Wheel cutters shall be used where practicable.

3.3.1 Metallic Piping Installation

Changes in direction of piping shall be made with fittings only; mitering or notching pipe to form elbows and tees or other similar type construction will not be permitted. Branch connection may be made with either tees or forged branch outlet fittings. Branch outlet fittings shall be forged, flared for improvement of flow where attached to the run, and reinforced against external strains.

3.3.2 Concealed Piping in Buildings

When installing piping which is to be concealed, unions, tubing fittings, running threads, right- and left-hand couplings, bushings, and swing joints made by combinations of fittings shall not be used.

3.3.2.1 Piping in Partitions

Concealed piping shall be located in hollow rather than solid partitions. Tubing passing through walls or partitions shall be protected against physical damage.

3.3.3 Aboveground Piping

Aboveground piping shall be run as straight as practicable along the alignment indicated and with a minimum of joints. Piping shall be separately supported.

3.3.4 Final Gas Connections

Unless otherwise specified herein, final connections shall be made with rigid metallic pipe and fittings. Provide accessible gas shutoff valve and coupling for each gas equipment item.

3.4 PIPE JOINTS

Pipe joints shall be designed and installed to effectively sustain the longitudinal pull-out forces caused by contraction of the piping or superimposed loads.

3.4.1 Threaded Metallic Joints

Threaded joints in metallic pipe shall have tapered threads evenly cut and shall be made with UL approved graphite joint sealing compound for gas service or tetrafluoroethylene tape applied to the male threads only. Threaded joints up to 1-1/2 inches in diameter may be made with approved tetrafluoroethylene tape. Threaded joints up to 2 inches in diameter may be made with approved joint sealing compound. After cutting and before threading, pipe shall be reamed and burrs shall be removed. Caulking of threaded joints to stop or prevent leaks shall not be permitted.

3.4.2 Welded Metallic Joints

Beveling, alignment, heat treatment, and inspection of welds shall conform to ASME B31.2. Weld defects shall be removed and repairs made to the weld, or the weld joints shall be entirely removed and rewelded. After filler metal has been removed from its original package, it shall be protected or stored so that its characteristics or welding properties are not affected adversely. Electrodes that have been wetted or have lost any of their coating shall not be used.

3.5 PIPE SLEEVES

Pipes passing through concrete or masonry walls or concrete floors or roofs shall be provided with pipe sleeves fitted into place at the time of construction. Sleeves shall not be installed in structural members except where indicated or approved. All rectangular and square openings shall be as detailed. Each sleeve shall extend through its respective wall, floor or roof, and shall be cut flush with each surface, except in mechanical room floors not located on grade where clamping flanges or riser pipe clamps are used. Sleeves in mechanical room floors above grade shall extend at least 4 inches above finish floor. Unless otherwise indicated, sleeves shall be large enough to provide a minimum clearance of 1/4 inch all around the pipe. Sleeves in bearing walls, waterproofing membrane floors, and wet areas shall be steel pipe. Sleeves in nonbearing walls, floors, or ceilings may be steel pipe, galvanized sheet metal with lock-type longitudinal seam, or moisture-resistant fiber or plastic. For penetrations of fire walls, fire partitions and floors which are not on grade, the annular space between the pipe and sleeve shall be sealed with firestopping material and sealant that meet the requirement of Section 07270FIRESTOPPING.

3.6 PIPES PENETRATING WATERPROOFING MEMBRANES

Pipes penetrating waterproofing membranes shall be installed as specified in Section 15400 PLUMBING, GENERAL PURPOSE.

3.7 FIRE SEAL

Penetrations of fire rated partitions, walls and floors shall be in accordance with Section 07270 FIRESTOPPING.

3.8 ESCUTCHEONS

Escutcheons shall be provided for all finished surfaces where gas piping passes through floors, walls, or ceilings except in boiler, utility, or equipment rooms.

3.9 SPECIAL REQUIREMENTS

Drips, grading of the lines, freeze protection, and branch outlet locations shall be as shown and shall conform to the requirements of NFPA 54.

3.10 BUILDING STRUCTURE

Building structure shall not be weakened by the installation of any gas piping. Beams or joists shall not be cut or notched.

3.11 PIPING SYSTEM SUPPORTS

Gas piping systems in buildings shall be supported with pipe hooks, metal pipe straps, bands or hangers suitable for the size of piping or tubing. Gas piping system shall not be supported by other piping. Spacing of supports in gas piping and tubing installations shall conform to the requirements of NFPA 54. The selection and application of supports in gas piping and tubing installations shall conform to the requirements of MSS SP-69. In the support of multiple pipe runs on a common base member, a clip or clamp shall be used where each pipe crosses the base support member. Spacing of the base support members shall not exceed the hanger and support spacing required for any of the individual pipes in the multiple pipe run. The clips or clamps shall be rigidly connected to the common base member. A clearance of 1/8 inch shall be provided between the pipe and clip or clamp for all piping which may be subjected to thermal expansion.

3.12 ELECTRICAL BONDING AND GROUNDING

A gas piping system within a building shall be electrically continuous and bonded to a grounding electrode as required by NFPA 70.

3.13 SHUTOFF VALVE

Main gas shutoff valve controlling the gas piping system shall be easily accessible for operation and shall be installed as indicated, protected from physical damage, and marked with a metal tag to clearly identify the piping system controlled.

3.14 TESTING

Before any section of a gas piping system is put into service, it shall be carefully tested to assure that it is gastight. Prior to testing, the system shall be blown out, cleaned and cleared of all foreign material. Each joint shall be tested by means of an approved gas detector, soap and water, or an equivalent nonflammable solution. Testing shall be completed before any work is covered, enclosed, or concealed. All testing of piping systems shall be done with due regard for the safety of employees and the public during the test. Bulkheads, anchorage and bracing suitably designed to resist test pressures shall be installed if necessary. Oxygen shall not be used as a testing medium.

3.14.1 Pressure Tests

Before appliances are connected, piping systems shall be filled with air or an inert gas and shall withstand a minimum pressure of 3 psi gauge for a period of not less than 10 minutes as specified in NFPA 54 without showing any drop in pressure. Oxygen shall not be used. Pressure shall be measured with a mercury manometer, slope gauge, or an equivalent device so calibrated as to be read in increments of not greater than .5 psi. The source of pressure shall be isolated before the pressure tests are made.

3.14.2 Pressure Tests for Liquified Petroleum Gas

Systems shall withstand the pressure test described above. When appliances are connected to the piping system, fuel gas shall be used for testing and appliances shall withstand a pressure of not less than 10.0 inches nor more than 14.0 inches water column (8.0 ounces per square inch) for a period of not less than 10 minutes without showing any drop in pressure. Pressure shall be measured with a water manometer or an equivalent device calibrated to be read in increments of not greater than 0.1 inch water column. The source of pressure shall be isolated before the pressure tests are made.

3.14.3 Test With Gas

Before turning gas under pressure into any piping, all openings from which gas can escape shall be closed. Immediately after turning on the gas, the piping system shall be checked for leakage by using a laboratory-certified gas meter, an appliance orifice, a manometer, or equivalent device. All testing shall conform to the requirements of NFPA 54. If leakage is recorded, the gas supply shall be shut off, the leak shall be repaired, and the tests repeated until all leaks have been stopped.

3.14.4 Purging

After testing is completed, and before connecting any appliances, all gas piping shall be fully purged. LPG piping tested using fuel gas with appliances connected does not require purging. Piping shall not be purged into the combustion chamber of an appliance. The open end of piping systems being purged shall not discharge into confined spaces or areas where there are ignition sources unless the safety precautions recommended in NFPA 54 are followed.

3.14.5 Labor, Materials and Equipment

All labor, materials and equipment necessary for conducting the testing and purging shall be furnished by the Contractor.

END OF SECTION

SECTION 15556

HOT WATER HEATING AND CHILLED WATER SYSTEMS

1 GENERAL

1.1 REFERENCES

The publications listed below form a part of this specification to the extent referenced. The publications are referred to in the text by basic designations only.

AMERICAN SOCIETY FOR TESTING AND MATERIALS (ASTM)

ASTM A 47	(1990) Ferritic Malleable Iron Castings
ASTM A 53	(1990b) Pipe, Steel, Black and Hot-Dipped, Zinc-Coated Welded and Seamless
ASTM A 105	(1992) Forgings, Carbon Steel, for Piping Components
ASTM A 106	(1991) Seamless Carbon Steel Pipe for High-Temperature Service
ASTM A 183	(1983; R 1990) Carbon Steel Track Bolts and Nuts
ASTM A 193	(1992) Alloy-Steel and Stainless Steel Bolting Materials for High-Temperature Service
ASTM A 234	(1992a) Piping Fittings of Wrought Carbon Steel and Alloy Steel for Moderate and Elevated Temperatures
ASTM A 366	(1991) Steel, Sheet, Carbon, Cold-Rolled, Commercial Quality
ASTM A 515	(1990) Pressure Vessel Plates, Carbon Steel, for Intermediate- and Higher-Temperature Service
ASTM A 516	(1990) Pressure Vessel Plates, Carbon Steel, for Moderate- and Lower-Temperature Service
ASTM A 525	(1991b) General Requirement for Steel Sheet, Zinc-Coated (Galvanized) by the Hot-Dip Process
ASTM A 527	(1990) Steel Sheet, Zinc-Coated (Galvanized) by the Hot-Dip Process, Lock-Forming Quality
ASTM A 528	(1990) Steel Sheet, Zinc-Coated (Galvanized) by the Hot-Dip Process, Drawing Quality
ASTM A 536	(1984) Ductile Iron Castings

ASTM A 569	(1991a) Steel, Carbon (0.15 Maximum, Percent), Hot-Rolled Sheet and Strip Commercial Quality
ASTM A 642	(1990) Steel Sheet, Zinc-Coated (Galvanized) by the Hot-Dip Process, Drawing Quality, Special Killed
ASTM A 733	(1989) Welded and Seamless Carbon Steel and Austenitic Stainless Steel Pipe Nipples
ASTM B 32	(1993) Solder Metal
ASTM B 62	(1993) Composition Bronze or Ounce Metal Castings
ASTM B 75	(1992a) Seamless Copper Tube
ASTM B 88	(1993) Seamless Copper Water Tube
ASTM B 251	(1993) Wrought Seamless Copper and Copper-Alloy Tube
ASTM B 265	(1993) Titanium and Titanium Alloy Strip, Sheet, and Plate
ASTM B 333	(1992) Nickel-Molybdenum Alloy Plate, Sheet, and Strip
ASTM B 395	(1993) U-Bend Seamless Copper and Copper Alloy Heat Exchanger and Condenser Tubes
ASTM B 424	(1993) Ni-Fe-Cr-Mo-Cu Alloy (UNS N08825 and UNS N08221) Plate, Sheet, and Strip
ASTM B 650	(1985) Electrodeposited Engineering Chromium Coatings of Ferrous Substrates
ASTM B 687	(1988) Brass, Copper, and Chromium-Plated Pipe Nipples
ASTM B 828	(1992) Making Capillary Joints by Soldering of Copper and Copper Alloy Tube and Fittings
ASTM D 596	(1991) Reporting Results of Analysis of Water
ASTM D 1248	(1984, R 1989) Polyethylene Plastics Molding and Extrusion Materials
ASTM D 1384	(1987) Corrosion Test for Engine Coolants in Glassware
ASTM D 2000	(1990) Rubber Products in Automotive Applications
ASTM D 3308	(1991a) PTFE Resin Skived Tape

AMERICAN SOCIETY OF MECHANICAL ENGINEERS (ASME)

ASME B1.20.1	(1983; R 1992) Pipe Threads, General Purpose (Inch)
ASME B16.1	(1989) Cast Iron Pipe Flanges and Flanged Fittings
ASME B16.3	(1992) Malleable Iron Threaded Fittings, Classes 150 and 300
ASME B16.4	(1992) Cast Iron Threaded Fittings Classes 125 and 250
ASME B16.5	(1988; Errata; B16.5a) Pipe Flanges and Flanged Fittings
ASME B16.9	(1993) Factory-Made Wrought Steel Buttwelding Fittings
ASME B16.11	(1991) Forged Fittings, Socket-Welding and Threaded
ASME B16.15	(1985; R 1994) Cast Bronze Threaded Fittings Classes 125 and 250
ASME B16.18	(1984) Cast Copper Alloy Solder Joint Pressure Fittings
ASME B16.21	(1992) Nonmetallic Flat Gaskets for Pipe Flanges
ASME B16.22	(1989) Wrought Copper and Copper Alloy Solder Joint Pressure Fittings
ASME B16.26	(1988) Cast Copper Alloy Fittings for Flared Copper Tubes
ASME B16.39	(1986; R 1994) Malleable Iron Threaded Pipe Unions Classes 150, 250, and 300
ASME B16.34	(1988) Valves - Flanged, Threaded, and Welding End
ASME B31.1	(1992; B31.1a; B31.1b) Power Piping
ASME B40.1	(1991) Gauges - Pressure Indicating Dial Type - Elastic Element
ASME BPV VIII Div 1	(1992; Addenda Dec 1992, Dec 1993) Boiler and Pressure Vessel Code; Section VIII, Pressure Vessels Division 1 - Basic Coverage
ASME BPV IX	(1992; Addenda Dec 1992, Dec 1993) Boiler and Pressure Vessel Code; Section IX, Welding and Brazing Qualifications

AMERICAN WATER WORKS ASSOCIATION (AWWA)

AWWA C606	(1987) Grooved and Shouldered Joints

AMERICAN WELDING SOCIETY (AWS)

AWS A5.8	(1992) Filler Metals for Brazing and Braze Welding

EXPANSION JOINT MANUFACTURERS ASSOCIATION (EJMA)

EJMA-01	(1980; Addenda 1985) EJMA Standards

HYDRONICS INSTITUTE (HYI)

HYI-01	(1992; Addenda Jan 1992) I=B=R Ratings for Boilers, Baseboard Radiation and Finned Tube (Commercial) Radiation

MANUFACTURERS STANDARDIZATION SOCIETY OF THE VALVE AND FITTINGS INDUSTRY (MSS)

MSS SP-25	(1993) Standard Marking System for Valves, Fittings, Flanges and Unions
MSS SP-58	(1988) Pipe Hangers and Supports - Materials, Design and Manufacture
MSS SP-69	(1991) Pipe Hangers and Supports - Selection and Application
MSS SP-70	(1990) Cast Iron Gate Valves, Flanged and Threaded Ends
MSS SP-71	(1990) Cast Iron Swing Check Valves, Flanges and Threaded Ends
MSS SP-80	(1987) Bronze Gate, Globe, Angle and Check Valves
MSS SP-85	(1985) Cast Iron Globe & Angle Valves Flanged and Threaded Ends

NATIONAL ASSOCIATION OF PLUMBING-HEATING-COOLING CONTRACTORS (NAPHCC)

NAPHCC-01	(1993) National Standard Plumbing Code (Non-Illustrated Edition

NATIONAL ELECTRICAL MANUFACTURERS ASSOCIATION (NEMA)

NEMA 250	(1991) Enclosures for Electrical Equipment (1000 Volts Maximum)

1.2 SUBMITTALS

Government approval is required for submittals with a "GA" designation; submittals having an "FIO" designation are for information only. The following shall be submitted in accordance with Section 01330 SUBMITTAL PROCEDURES:

SD-01 Data

Spare Parts; FIO.

Spare parts data for each different item of material and equipment specified , after approval of the related submittals and not later than 2 months prior to the date of beneficial occupancy. The data shall include a complete list of parts and supplies, with current unit prices and source of supply.

Welding Procedures

Welding Procedures and Qualifications; FIO.

Six copies of qualified procedures and list of names and identification symbols of qualified welders and welding operators, prior to welding operations.

SD-04 Drawings

Piping System; FIO.

Detail drawings consisting of a complete list of equipment and material, including manufacturer's descriptive and technical literature, performance charts and curves, catalog cuts, and installation instructions. Drawings shall also contain complete wiring and schematic diagrams and any other details required to demonstrate that the system has been coordinated and will properly function as a unit. Drawings shall show proposed layout and anchorage of equipment and appurtenances and equipment relationship to other parts of the work including clearances for maintenance and operation.

SD-06 Instructions

Framed Instructions; FIO.

Proposed diagrams, instructions, and other sheets, prior to posting. The instructions shall show wiring and control diagrams and complete layout of the entire system. The instructions shall include, in typed form, condensed operating instructions explaining preventive maintenance procedures, methods of checking the system for normal safe operation and procedures for safely starting and stopping the system.

SD-09 Reports

Performance Tests; FIO.

Performance test reports in booklet form showing all field tests performed to adjust each component and all field tests performed to prove compliance with the specified performance criteria, upon completion and testing of the installed system. Each test report shall indicate the final position of controls.

Water Treatment Tests; FIO.

The water quality test report shall identify the chemical composition of the heating water. The report shall include a comparison of the condition of the water with the chemical company's recommended conditions. Any required corrective action shall be documented within the report.

SD-13 Certificates

Bolts; FIO.

Written certification that the bolts furnished comply with the requirements of this specification, provided by the bolt manufacturer. The certification shall include illustrations of product-required markings, the date of manufacture, and the number of each type of bolt to be furnished based on this certification.

SD-19 Operation and Maintenance Manuals

Heating and Chilled Water System; FIO.

Six copies of operation and six copies of maintenance manuals for the equipment furnished. One complete set, prior to performance testing and the remainder upon acceptance. Operating manuals shall detail the step-by-step procedures required for system startup, operation, and shutdown. Operating manuals shall include the manufacturer's name, model number, parts list, and brief description of all equipment and their basic operating features. Maintenance manuals shall list routine maintenance procedures, water treatment procedures, possible breakdowns and repairs, and troubleshooting guides. Maintenance manuals shall include piping and equipment layout and simplified wiring and control diagrams of the system as installed. Manuals shall be provided prior to the field training course.

1.3 QUALIFICATIONS

Procedures and welders shall be qualified in accordance with the code under which the welding is specified to be accomplished.

1.4 DELIVERY AND STORAGE

All equipment delivered and placed in storage shall be stored with protection from the weather, excessive humidity and excessive temperature variation; and dirt, dust, or other contaminants.

1.5 FIELD MEASUREMENTS

The Contractor shall become familiar with all details of the work, verify all dimensions in the field, and shall advise the Contracting Officer of any discrepancy before performing the work.

2 PRODUCTS

2.1 GENERAL MATERIAL AND EQUIPMENT REQUIREMENTS

2.1.1 Standard Products

Materials and equipment shall be the standard products of a manufacturer regularly engaged in the manufacture of such products and shall essentially duplicate items that have been in satisfactory use for at least 2 years prior to bid opening. Equipment shall be supported by a service organization that is, in the opinion of the Contracting Officer, reasonably convenient to the site.

2.1.2 Nameplates

Each major item of equipment shall have the manufacturer's name, address, type or style, model or serial number, and catalog number on a plate secured to the item of equipment.

2.1.3 Equipment Guards and Access

Belts, pulleys, chains, gears, couplings, projecting setscrews, keys, and other rotating parts exposed to personnel contact shall be fully enclosed or guarded in accordance with OSHA requirements. High temperature equipment and piping exposed to contact by personnel or where it creates a potential fire hazard shall be properly guarded or covered with insulation of a type specified. Catwalks, operating platforms, ladders, and guardrails shall be provided where shown and shall be constructed in accordance with Section 05500 MISCELLANEOUS METAL.

2.1.4 Asbestos Prohibition

Asbestos and asbestos-containing products shall not be used.

2.1.5 Electrical Work

Electrical motor driven equipment specified shall be provided complete with motors, motor starters, and controls. Electric equipment (including motor efficiencies), and wiring shall be in accordance with Section 16415 ELECTRICAL WORK, INTERIOR. High efficiency motors shall be used. Electrical characteristics shall be as specified or indicated. Motor starters shall be provided complete with thermal overload protection and other appurtenances necessary for the motor control specified. Each motor shall be of sufficient size to drive the equipment at the specified capacity without exceeding the nameplate rating of the motor. Manual or automatic control and protective or signal devices required for the operation specified, and any control wiring, conduit, and connection to power required for controls and devices but not shown shall be provided.

2.2 PIPING, TUBING, AND FITTINGS

2.2.1 General

Piping, tubing, and fittings shall be as follows:

a. Heating water and chilled water piping shall be black steel or copper tubing with cast iron, malleable iron or steel, solder-joint, flared-tube or grooved mechanical joint fittings.

2.2.2 Steel Pipe

Pipe shall conform to ASTM A 53 or ASTM A 106, Grade A or B, black steel, Schedule 40, unless otherwise specified. Steel pipe to be bent shall be ASTM A 53, Grade A, standard, or Grade B, extra strong weight. Steam pipe shall be ASTM A 53 Grade A.

2.2.3 Gauge Piping

Piping shall be copper tubing for low temperature water.

2.2.4 Copper Tubing

Tubing shall conform to ASTM B 88, Type K or L.

2.2.5 Steel Pipe Fittings

Fittings shall have the manufacturer's trademark affixed in accordance with MSS SP-25 so as to permanently identify the manufacturer.

2.2.5.1 Welded Fittings

Welded fittings shall conform to ASTM A 234 with WPA marking. Butt welded fittings shall conform to ASME B16.9, and socket welded fittings shall conform to ASME B16.11.

2.2.5.2 Grooved Mechanical Fittings

Standard fittings shall be of malleable iron conforming to ASTM A 47, Grade 32510, or ductile iron conforming to ASTM A 536, Grade 65-45-12. Fittings may also be constructed of steel, conforming to ASTM A 106, Grade B or ASTM A 53.

2.2.5.3 Grooved Mechanical Pipe Joints

Pipe joints shall conform to AWWA C606. Grooved mechanical joint fittings shall be full flow factory manufactured forged steel fittings. Fittings, couplings, gaskets, and pipe grooving tool or grooved end pipe shall be products of the same manufacturer. Mechanical pipe couplings shall be of the bolted type and shall consist of a housing fabricated in two or more parts, a synthetic rubber gasket, and nuts and bolts to secure unit together. Housings shall be of malleable iron conforming to ASTM A 47, Grade 32510 or ductile iron conforming to ASTM A 536, Grade 65-45-12. Coupling nuts and bolts shall be of steel and conform to ASTM A 183. Gaskets shall be of molded synthetic rubber, Type EPDM with central cavity, pressure responsive configuration and shall conform to ASTM D 2000.

2.2.6 Fittings for Copper Tubing

Wrought copper and bronze fittings shall conform to ASME B16.22 and ASTM B 75. Cast copper alloy fittings shall conform to ASME B16.18 and ASTM B 828. Flared fittings shall conform to ASME B16.26 and ASTM B 62. Adaptors may be used for connecting tubing to flanges and threaded ends of valves and

equipment. Extracted brazed tee joints produced with an acceptable tool and installed as recommended by the manufacturer may be used. Cast bronze threaded fittings shall conform to ASME B16.15.

2.2.7 Steel Flanges

Flanged fittings including flanges, bolts, nuts, bolt patterns., etc. shall be in accordance with ASME B16.5 class 150 and shall have the manufacturers trademark affixed in accordance with MSS SP-25. Flange material shall conform to ASTM A 105. Flanges for high temperature water systems shall be serrated or raised-face type. Blind flange material shall conform to ASTM A 516 cold service and ASTM A 515 for hot service. Bolts shall be high strength or intermediate strength with material conforming to ASTM A 193.

2.2.8 Pipe Threads

Pipe threads shall conform to ASME B1.20.1.

2.2.9 Nipples

Nipples shall conform to ASTM A 733 or ASTM B 687, standard weight.

2.2.10 Unions

Unions shall conform to ASME B16.39, type to match adjacent piping.

2.2.11 Adapters

Adapters for copper tubing shall be brass or bronze for soldered fittings.

2.2.12 Dielectric Unions

Unions shall conform to the tensile strength and dimensional requirements specified in ASME B16.39. Unions shall have metal connections on both ends to match adjacent piping. Metal parts of dielectric unions shall be separated so that the electrical current is below 1 percent of the galvanic current which would exist upon metal-to-metal contact.

2.2.13 Grooved Mechanical Joints

Rigid grooved pipe joints may be provided in lieu of unions, welded, flanges or screwed piping connections at chilled water pumps and allied equipment, and on aboveground pipelines in serviceable locations, if the temperature of the circulating medium does not exceed 110 degrees C. Flexible grooved joints will not be permitted, except as vibration isolators adjacent to mechanical equipment. Rigid grooved joints shall incorporate an angle bolt pad design which maintains metal-to-metal contact with equal amount of pad offset of housings upon installation to insure positive rigid clamping of the pipe. Designs which can only clamp on the bottom of the groove or which utilize gripping teeth or jaws, or which use misaligned housing bolt holes, or which require a torque wrench or torque specifications, will not be permitted. Rigid grooved pipe couplings shall be used with grooved end pipes, fittings, valves and strainers. Rigid couplings shall be designed for not less than 862 kPa service and appropriate for static head plus the pumping head, and shall provide a water-tight joint. Grooved fittings and couplings, and grooving tools shall be provided from the same manufacturer. Segmentally welded elbows shall not be used. Grooves shall be prepared in

accordance with the coupling manufacturer's latest published standards. Grooving shall be performed by qualified grooving operators having demonstrated proper grooving procedures in accordance with the tool manufacturer's recommendations. The Contracting Officer shall be notified 24 hours in advance of test to demonstrate operator's capability, and the test shall be performed at the work site, if practical, or at a site agreed upon. The operator shall demonstrate the ability to properly adjust the grooving tool, groove the pipe, and verify the groove dimensions in accordance with the coupling manufacturer's specifications.

2.2.14 Flexible Pipe Connectors

Flexible pipe connectors shall be designed for 1.034 MPa or 1.034 MPa service as appropriate for the static head plus the system head, and 121 degrees C. Connectors shall be installed where indicated. The flexible section shall be constructed of rubber, tetrafluoroethylene resin, or corrosion-resisting steel, bronze, monel, or galvanized steel. Materials used and the configuration shall be suitable for the pressure, vacuum, temperature, and circulating medium. The flexible section may have threaded, welded, soldered, flanged, grooved, or socket ends. Flanged assemblies shall be equipped with limit bolts to restrict maximum travel to the manufacturer's standard limits. Unless otherwise indicated, the length of the flexible connectors shall be as recommended by the manufacturer for the service intended. Internal sleeves or liners, compatible with circulating medium, shall be provided when recommended by the manufacturer. Covers to protect the bellows shall be provided where indicated.

2.3 MATERIALS AND ACCESSORIES

2.3.1 Iron and Steel Sheets

2.3.1.1 Galvanized Iron and Steel

Galvanized iron and steel shall conform to ASTM A 527, ASTM A 528, or ASTM A 642, with general requirements conforming to ASTM A 525. Gauge numbers specified are Manufacturer's Standard Gauge.

2.3.1.2 Uncoated (Black) Steel

Uncoated (black) steel shall conform to ASTM A 366 or ASTM A 569, composition, condition, and finish best suited to the intended use. Gauge numbers specified refer to Manufacturer's Standard Gauge.

2.3.2 Solder

Solder shall conform to ASTM B 32. Solder and flux shall be lead free.

2.3.3 Solder, Silver

Silver solder shall conform to AWS A5.8.

2.3.4 Thermometers

Thermometers shall have brass, malleable iron, or aluminum alloy case and frame, clear protective face, permanently stabilized glass tube with indicating-fluid column, white face, black numbers, and a 225 mm scale, and

thermometers shall have rigid stems with straight, angular, or inclined pattern.

2.3.5 Gauges

Gauges shall conform to ASME B40.1.

2.3.6 Gaskets for Flanges

Composition gaskets shall conform to ASME B16.21. Gaskets shall be nonasbestos compressed material in accordance with ASME B16.21, 6.6 mm thickness, full face or self-centering flat ring type. Gaskets shall contain aramid fibers bonded with styrene butadiene rubber (SBR) or nitrile butadiene rubber (NBR). NBR binder shall be used for hydrocarbon service. Gaskets shall be suitable for pressure and temperatures of piping system.

2.3.7 Pipe Hangers, Inserts, and Supports

Pipe hangers, inserts, and supports shall conform to MSS SP-58 and MSS SP-69.

2.4 VALVES FOR LOW TEMPERATURE WATER HEATING AND CHILLED WATER SYSTEMS

2.4.1 Check Valves

Sizes 65 mm and less, bronze shall conform to MSS SP-80, Type 3 or 4, Class 125. Sizes 80 mm through 300 mm, cast iron shall conform to MSS SP-71, Type III or IV, Class 125.

2.4.2 Globe Valves

Sizes 65 mm and less, bronze shall conform to MSS SP-80, Type 1, 2 or 3, Class 125. Sizes 80 mm through 300 mm, cast iron shall conform to MSS SP-85, Type III, Class 125.

2.4.3 Angle Valves

Sizes 65 mm and less, bronze shall conform to MSS SP-80, Type 1, 2 or 3, Class 125. Sizes 80 mm through 300 mm, cast iron shall conform to MSS SP-85, Type III, Class 125.

2.4.4 Gate Valves

Sizes 60 mm and less, bronze shall conform to MSS SP-80, Type 1 or 2, Class 125.

2.4.5 Butterfly Valves

Sizes 65 mm and larger, Class 150 wafer type, cast iron body, ductile iron disc, stainless steel stem, Buna N seat and seals, field replaceable seat; rated by test bubble tight at 1140 kPa; notched plate handle operator.

2.4.6 Air Vents

Air vents shall be provided at all piping high points in water systems, with block valve in inlet and internal check valve to allow air vent to be isolated for cleaning and inspection. Outlet connection shall be piped to

nearest open site or suitable drain, or terminated 300 mm above finished grade. Pressure rating of air vent shall match pressure rating of piping system. Body and cover shall be cast iron or semi-steel with stainless steel or copper float and stainless steel or bronze internal parts. Air vents installed in piping in chase walls or other inaccessible places shall be provided with an access panel.

2.4.7 Balancing Valves

Balancing valves shall have meter connections with positive shutoff valves. An integral pointer shall register degree of valve opening. Valves shall be calibrated so that flow in liters per minute can be determined when valve opening in degrees and pressure differential across valve is known. Each balancing valve shall be constructed with internal seals to prevent leakage and shall be supplied with preformed insulation. Valves shall be suitable for 121 degrees C temperature and working pressure of the pipe in which installed. Valve bodies shall be provided with tapped openings and pipe extensions with shutoff valves outside of pipe insulation. The pipe extensions shall be provided with quick connecting hose fittings for a portable meter to measure the pressure differential. One portable differential meter shall be furnished. The meter suitable for the operating pressure specified shall be complete with hoses, vent, and shutoff valves and carrying case. Valves shall provide flow measurement, flow balancing and drip tight shut-off. Valve shall provide multi-turn 360 degree adjustment of flow. Valves utilizing 90 degree turn adjustment are not acceptable. Valve shall have a memory feature to provide a means of locking valve position after the system is balanced.

2.5 COLD WATER CONNECTIONS

Connections shall be provided which include consecutively in line a strainer, backflow prevention device, and water pressure regulator. The backflow prevention device shall be provided as indicated and in compliance with Section 15400 PLUMBING, GENERAL PURPOSE.

2.5.1 Strainers

Basket or Y-type strainers shall be the same size as the pipelines in which they are installed. Strainer bodies shall be rated for 862 kPa service, with bottoms drilled and plugged. Bodies shall have arrows cast on the sides to indicate the direction of flow. Each strainer shall be equipped with a removable cover and sediment basket. Basket shall not be less than 0.795 mm and shall have perforations to provide a net free area through the basket of at least four times that of the entering pipe.

2.5.2 Pressure Regulating Valve

Valve shall be a type that will not stick nor allow pressure to build up on the low side. Valve shall be set to maintain a terminal pressure approximately 35 kPa in excess of the static head on the system and shall operate within a 138 kPa variation regardless of initial pressure and without objectionable noise under any condition of operation.

2.6 EXPANSION TANK

Pressurization system shall include a replaceable diaphragm-type captive air expansion tank which will accommodate the expanded water of the system

generated within the normal operating temperature range, limiting this pressure increase at all components in the system to the maximum allowable pressure at those components. The only air in the system shall be the permanent sealed-in air cushion contained in the diaphragm-type tank. Sizes shall be as indicated. Expansion tank shall be welded steel, constructed, tested and stamped in accordance with ASME BPV VIII Div 1 for a working pressure of 862 kPa and precharged to the minimum operating pressure. Tank air chamber shall be fitted with an air charging valve. Tank shall be supported by steel legs or bases for vertical installation or steel saddles for horizontal installations.

2.7 AIR SEPARATOR

External air separation tank shall be tangential inlet and outlet steel, constructed, tested, and stamped in accordance with ASME BPV VIII Div 1 for a working pressure of 862 kPa.

2.8 SYSTEM EQUIPMENT AND ACCESSORIES

2.8.1 Base Mounted Circulating Pumps

Pumps for hot water and chilled water shall be of the single-stage centrifugal type, base mounted end suction, electrically driven. Pumps shall be supported on a concrete foundation and as indicated. Pumps shall be direct-connected by means of a flexible-shaft coupling on a cast iron, or steel sub-base. Pump housing shall be of close grained cast iron. Shaft shall be carbon or alloy steel, turned and ground. Shaft seal shall be mechanical-seal or stuffing-box type. Impeller, impeller wearing rings, glands, casing wear rings, and shaft sleeve shall be bronze. Bearings shall be ball-, roller-, or oil-lubricated, bronze-sleeve type, and shall be sealed or isolated to prevent loss of oil or entrance of dirt or water. Motor shall be premium efficiency open dripproof, of a type approved by the manufacturer of the pump.

2.8.2 Pressure Gauges and Thermometers

Gauges shall be provided for each device and piping as indicated. A thermometer and pressure gauge shall be provided on the heating and chilled water supply and return mains. Thermometers shall be separable socket type.

2.8.3 Drains

A drain connection with 20 mm hose bib shall be installed at the lowest point in the low temperature water return main near the heat exchanger. In addition, threaded drain connections with threaded cap or plug shall be installed wherever required for thorough draining of the low temperature water system.

2.8.4 Strainers

Basket or Y-type strainer-body connections shall be the same size as the pipe lines in which the connections are installed. The bodies shall have arrows clearly cast on the sides to indicate the direction of flow. Each strainer shall be equipped with an easily removable cover and sediment basket. The body or bottom opening shall be equipped with nipple and gate valve for blowdown. The basket for steam systems shall be of not less than 0.635 mm thick stainless steel, or monel with small perforations of

sufficient number to provide a net free area through the basket of at least 2.5 times that of the entering pipe. The flow shall be into the basket and out through the perforations.

2.9 INSULATION

Shop and field applied insulation shall be as specified in Section 15250 THERMAL INSULATION FOR MECHANICAL SYSTEMS.

2.10 FACTORY PAINTED EXPOSED SPACE HEATING EQUIPMENT

Finned tube unit enclosures shall be coated with the manufacturer's standard rust inhibiting primer for painting in the field as specified in Section 09900 PAINTING, GENERAL. All other exposed heating equipment shall be painted at the factory with the manufacturer's standard primer and enamel finish.

2.11 FINNED TUBE UNITS (FTU)

The FTU shall be the type and size indicated. The supply and return connections shall be the same size.

2.11.1 Finned Tube Radiators

Radiators shall consist of metal fins permanently bonded to steel or nonferrous pipe cores, with threaded or sweat fittings at each end for connecting to external piping. Radiators shall have capacities not less than those indicated, determined in accordance with HYI-01. Radiators shall be equipped with extruded aluminum horizontal-top cover grilles, secured either directly to the radiators or to independent brackets.

2.11.2 Radiator Control

Controls shall be provided as specified in Section 15951 DIRECT DIGITAL CONTROL FOR HVAC.

2.12 UNIT HEATERS (UH)

Heaters shall be as specified below, and shall have a heating capacity not in excess of 110 percent of the capacity indicated.

2.12.1 Propeller Fan Heaters

Heaters shall be designed for suspension and arranged for horizontal discharge of air as indicated. Casings shall be not less than 0.912 mm black steel and finished with lacquer or enamel. Suitable stationary deflectors shall be provided to assure proper air and heat penetration capacity at floor level based on established design temperature. Suspension from heating pipes will not be permitted. Horizontal discharge type unit heaters shall have discharge or face velocities not in excess of the following:

Unit Capacity, Liters per Second	Face Velocity, Meters per Second
Up to 472	4.06

473	4.57
1417	5.08

2.12.2 Heating Elements

Heating coils shall be as specified in Section 15895 AIR SUPPLY, DISTRIBUTION, VENTILATION, AND EXHAUST SYSTEM for types indicated. Coils shall be suitable for use with water up to 121 degrees C.

2.12.3 Motors

Motors shall be provided with NEMA 250 general purpose enclosure. Motors and motor controls shall otherwise be as specified in Section 16415 ELECTRICAL WORK, INTERIOR.

2.12.4 Motor Switches

Motors shall be provided with manual selection switches with "Off," and "Automatic" positions and shall be equipped with thermal overload protection.

2.12.5 Controls

Controls shall be provided as specified in Section 15951 DIRECT DIGITAL CONTROL FOR HVAC.

2.13 WATER TREATMENT SYSTEM

The water treatment system shall be capable of manually feeding chemicals into the heating system to prevent corrosion and scale within the heat exchanger and piping system. All water treatment equipment and chemicals shall be furnished and installed by a water treatment company regularly engaged in the installation of water treatment equipment and the provision of water treatment chemicals based upon water condition analyses. The water treatment company shall provide a water sample analysis taken from the building site, each month for one year.

2.13.1 Chemical Pot Feeder

A pot feeder shall be provided as indicated. Size and capacity of feeder shall be based upon local requirements and water analysis. The feeder shall be furnished with an air vent, gauge glass, funnel, valves, fittings, and piping. All materials of construction shall be compatible with the chemicals being used.

2.13.2 Chemicals

The chemical company shall provide pretreatment chemicals that will remove and permit flushing of mill scale, oil, grease, and other foreign matter from the water heating system. The chemical company shall also provide all treatment chemicals required for the initial fill of the system and for a period of one year of operation. The chemical company shall determine the correct chemicals and concentrations required for the water treatment. The chemicals shall not be proprietary and shall meet required federal, state, and local environmental regulations for the treatment of heating water

systems and discharge to the sanitary sewer. The chemicals shall remain stable throughout the operating temperature range of the system, and shall be compatible with pump seals and other elements of the system.

3 EXECUTION

3.1 INSTALLATION

All work shall be installed as indicated and in accordance with the manufacturer's diagrams and recommendations.

3.2 FIELD PAINTING

Field painting of exposed pipe shall be as specified in Section 09900 PAINTING, GENERAL. Field painting of factory primed equipment shall be as specified in Section 09900 PAINTING, GENERAL.

3.3 PIPING

Unless otherwise specified, pipe and fittings installation shall conform to the requirements of ASME B31.1. Pipe shall be cut accurately to measurements established at the job site and worked into place without springing or forcing, completely clearing all windows, doors, and other openings. Cuttings or other weakening of the building structure to facilitate piping installation will not be permitted without written approval. Pipe or tubing shall be cut square, shall have burrs removed by reaming, and shall be so installed as to permit free expansion and contraction without causing damage to building structure, pipe, joints, or hangers. Changes in direction shall be made with factory made fittings, except that bending of pipe up to 100 mm will be permitted, provided a pipe bender is used and wide sweep bends are formed. The center line radius of bends shall not be less than six diameters of the pipe. Bent pipe showing kinks, wrinkles, flattening, or other malformations will not be accepted. Vent pipes shall be installed through the roof as indicated and shall be flashed as specified. Horizontal mains shall pitch up or down in the direction of flow as indicated. The grade shall be not less than 25 mm in 12 m. Reducing fittings shall be used for changes in pipe sizes. Open ends of pipelines and equipment shall be capped or plugged during installation to keep dirt or other foreign materials out of the systems. Pipe not otherwise specified shall be uncoated. Unions and other components for copper pipe or tubing shall be brass or bronze. Connections between ferrous and copper piping shall be electrically isolated using dielectric unions.

3.3.1 Joints

Except as otherwise specified, joints used on steel pipe shall be threaded for fittings 25 mm and smaller; threaded or welded for 32 mm up through 65 mm; and flanged or welded for 80 mm and larger. Joints between sections of copper tubing or copper pipe shall be flared or sweated. Pipe and fittings 32 mm and larger installed in inaccessible conduits or trenches beneath concrete floor slabs shall be welded. Unless otherwise specified, connections to equipment shall be made with black malleable iron unions for pipe 65 mm or smaller in diameter, and with flanges for pipe 80 mm or larger in diameter.

3.3.2 Low Temperature Systems

Piping may have threaded, welded, flanged or flared, sweated, or grooved mechanical joints as applicable and as specified. Reducing fittings shall be used for changes in pipe sizes. In horizontal lines, reducing fittings shall be the eccentric type to maintain the top of the adjoining pipes at the same level.

3.3.3 Threaded Joints

Threaded joints shall be made with tapered threads properly cut, and shall be made tight with PTFE tape complying with ASTM D 3308, or equivalent thread joint compound applied to the male threads only, and in no case to the fittings.

3.3.4 Welded Joints

Joints shall be fusion-welded unless otherwise required. Changes in direction of piping shall be made with welding fittings only. Branch connection may be made with either welding tees or branch outlet fittings. Branch outlet fittings shall be forged, flared for improvement of flow where attached to the run, and reinforced against external strains.

3.3.5 Flanged Joints or Unions

Flanged joints or unions shall be provided in each line immediately preceding the connection to each piece of equipment or material requiring maintenance such as coils, pumps, control valves, and similar items. Flanged joints shall be faced true, provided with gaskets, and made square and tight. Full-faced gaskets shall be used with cast iron flanges.

3.3.6 Flared and Sweated Pipe and Tubing

Pipe and tubing shall be cut square and burrs shall be removed. Both inside of fittings and outside of tubing shall be cleaned with an abrasive before sweating. Care shall be taken to prevent annealing of fittings and hard drawn tubing when making connection. Installation shall be made in accordance with the manufacturer's recommendations. Changes in direction of piping shall be made with flared or soldered fittings only. Solder and flux shall be lead free. Joints for soldered fittings shall be made with silver solder or 95:5 tin-antimony solder. Cored solder shall not be used. Joints for flared fittings shall be of the compression pattern. Swing joints or offsets shall be provided on all branch connections, mains, and risers to provide for expansion and contraction forces without undue stress to the fittings or to short lengths of pipe or tubing.

3.3.7 Mechanical Tee Joint

An extracted mechanical tee joint may be made in copper tube. Joint shall be produced with an appropriate tool by drilling a pilot hole and drawing out the tube surface to form a collar having a minimum height of three times the thickness of the tube wall. To prevent the branch tube from being inserted beyond the depth of the extracted joint, dimpled depth stops shall be provided. The branch tube shall be notched for proper penetration into fitting to assure a free flow joint. Joints shall be brazed in accordance with NAPHCC-01. Soldered joints will not be permitted.

3.4 CONNECTIONS TO EQUIPMENT

Supply and return connections shall be provided by the Contractor unless otherwise indicated. Valves shall be installed in accordance with the manufacturer's recommendations. Unless otherwise indicated, the size of the supply and return pipes to each piece of equipment shall be not smaller than the connections on the equipment. No bushed connections shall be permitted. Change in sizes shall be made with reducers or increasers only.

3.4.1 Low Temperature Water Connections

Connections, unless otherwise indicated, shall be made with malleable iron unions for piping 65 mm or less in diameter and with flanges for pipe 80 mm or more in diameter.

3.5 BRANCH CONNECTIONS

Branches shall pitch up or down as indicated, unless otherwise specified. Connection shall be made to insure unrestricted circulation, eliminate air pockets, and permit drainage of the system.

3.5.1 Low Temperature Water Branches

Branches taken from mains shall pitch with a grade of not less than 25 mm in 3 m.

3.6 RISERS

The location of risers is approximate. Exact locations of the risers shall be as approved.

3.7 SUPPORTS

3.7.1 General

Hangers used to support piping 50 mm and larger shall be fabricated to permit adequate adjustment after erection while supporting the load. Pipe guides and anchors shall be installed to keep pipes in accurate alignment, to direct the expansion movement, and to prevent buckling, swaying, and undue strain. All piping subjected to vertical movement when operating temperatures exceed ambient temperatures, shall be supported by variable spring hangers and supports or by constant support hangers.

3.7.1.1 Seismic Requirements for Pipe Supports, Standard Bracing

All piping and attached valves shall be supported and braced to resist seismic loads as shown on the drawings. Structural steel required for reinforcement to properly support piping, headers, and equipment but not shown shall be provided under this section. Material used for supports shall be as specified under Section 05120 STRUCTURAL STEEL.

3.7.1.2 Structural Attachments

Structural steel brackets required to support piping, headers, and equipment, but not shown, shall be provided under this section. Material and installation shall be as specified under Section 05120 STRUCTURAL STEEL.

3.7.1.3 Multiple Pipe Runs

In the support of multiple pipe runs on a common base member, a clip or clamp shall be used where each pipe crosses the base support member. Spacing of the base support members shall not exceed the hanger and support spacing required for any individual pipe in the multiple pipe run.

3.7.2 Pipe Hangers, Inserts, and Supports

Pipe hangers, inserts and supports shall conform to MSS SP-58 and MSS SP-69, except as specified as follows:

a. Types 5, 12, and 26 shall not be used.

b. Type 3 shall not be used on insulated pipe which has a vapor barrier. Type 3 may be used on insulated pipe that does not have a vapor barrier if clamped directly to the pipe and if the clamp bottom does not extend through the insulation and the top clamp attachment does not contact the insulation during pipe movement.

c. Type 18 inserts shall be secured to concrete forms before concrete is placed. Continuous inserts which allow more adjustment may be used if they otherwise meet the requirements for Type 18 inserts.

d. Type 19 and 23 C-clamps shall be torqued per MSS SP-69 and have both locknuts and retaining devices, furnished by the manufacturer. Field-fabricated C-clamp bodies or retaining devices are not acceptable.

e. Type 20 attachments used on angles and channels shall be furnished with an added malleable iron heel plate or adapter.

f. Type 24 may be used only on trapeze hanger systems or on fabricated frames.

g. Where Type 39 saddle or Type 40 shield are permitted for a particular pipe attachment application, the Type 39 saddle shall be used on all pipe 100 mm and larger.

h. Horizontal pipe supports shall be spaced as specified in MSS SP-69 and a support shall be installed not over 300 mm from the pipe fitting joint at each change in direction of the piping. Pipe supports shall be spaced not over 1.5 m apart at valves.

i. Vertical pipe shall be supported at each floor, except at slab-on-grade, and at intervals of not more than 4.5 m, except that pipe shall be supported not more than 2.4 m from end of risers, and at vent terminations.

j. Type 35 guides using steel, reinforced PTFE or graphite slides shall be provided where required to allow longitudinal pipe movement. Lateral restraints shall be provided as required. Slide materials shall be suitable for the system operating temperatures, atmospheric conditions and bearing loads encountered. Where steel slides do not require provision for restraint or lateral movement, an alternate guide method may be used. On piping 100 mm and larger, a Type 39 saddle may be welded to the pipe and freely rest

on a steel plate. On piping under 100 mm, a Type 40 protection shield may be attached to the pipe or insulation and freely rest on a steel slide plate. Where there are high system temperatures and welding to piping is not desirable, then the Type 35 guide shall include a pipe cradle, welded to the guide structure and strapped securely to the pipe. The pipe shall be separated from the slide material by at least 100 mm, or by an amount adequate for the insulation, which ever is greater.

k. Except for Type 3, pipe hangers on horizontal insulated pipe shall be the size of the outside diameter of the insulation.

3.8 PIPE SLEEVES

3.8.1 Pipe Passing Through Concrete or Masonry

Pipe passing through concrete or masonry walls or concrete floors or roofs shall be provided with pipe sleeves fitted into place at the time of construction. Sleeves shall not be installed in structural members except where indicated or approved. Rectangular and square openings shall be as detailed. Each sleeve shall extend through its respective wall, floor, or roof, and shall be cut flush with each surface. Unless otherwise indicated, sleeves shall provide a minimum of 6 mm annular space between bare pipe or insulation surface and sleeves. Sleeves in bearing walls, waterproofing membrane floors, and wet areas shall be steel pipe or cast iron pipe. Sleeves in nonbearing walls, floors, or ceilings may be steel pipe, cast iron pipe, or galvanized sheet metal with lock-type longitudinal seam and of the metal thickness indicated. Except in pipe chases or interior walls, the annular space between pipe and sleeve or between jacket over insulation and sleeve in nonfire rated walls and floors shall be sealed as indicated and specified in Section 07920 JOINT SEALING. Penetrations in fire walls and floors shall be sealed in accordance with Section 07270 FIRESTOPPING.

3.8.2 Pipes Passing Through Waterproofing Membranes

Pipes passing through waterproofing membranes shall be installed through a 19.5 kg/square meter lead-flashing sleeve, a 4.9 kg/square meter copper sleeve, or a 0.813 mm thick aluminum sleeve, each having an integral skirt or flange. Flashing sleeve shall be suitably formed, and the skirt or flange shall extend 200 mm or more from the pipe and shall be set over the roof or floor membrane in a troweled coating of bituminous cement. The flashing sleeve shall extend up the pipe a minimum of 50 mm above the highest flood level of the roof or a minimum of 250 mm above the roof, whichever is greater, or 250 mm above the floor. The annular space between the flashing sleeve and the bare pipe or between the flashing sleeve and the metal-jacket-covered insulation shall be sealed as indicated. At the Contractor's option, pipes up to and including 250 mm in diameter passing through roof or floor waterproofing membrane may be installed through a cast iron sleeve with caulking recess, anchor lugs, flashing clamp device, and pressure ring with brass bolts. Waterproofing membrane shall be clamped into place and sealant shall be placed in the caulking recess.

3.8.3 Mechanical Seal Assembly

In lieu of a waterproofing clamping flange and caulking and sealing of annular space between pipe and sleeve or conduit and sleeve, a modular mechanical type sealing assembly may be installed. The seals shall consist

of interlocking synthetic rubber links shaped to continuously fill the annular space between the pipe/conduit and sleeve with corrosion protected carbon steel bolts, nuts, and pressure plates. The links shall be loosely assembled with bolts to form a continuous rubber belt around the pipe with a pressure plate under each bolt head and each nut. After the seal assembly is properly positioned in the sleeve, tightening of the bolts shall cause the rubber sealing elements to expand and provide a watertight seal between the pipe/conduit and the sleeve. Each seal assembly shall be sized as recommended by the manufacturer to fit the pipe/conduit and sleeve involved. The Contractor electing to use the modular mechanical type seals shall provide sleeves of the proper diameters.

3.8.4 Counterflashing Alternate

As an alternate to caulking and sealing the annular space between the pipe and flashing sleeve or metal-jacket-covered insulation and flashing sleeve, counterflashing may be by standard roof coupling for threaded pipe up to 150 mm in diameter; lead-flashing sleeve for dry vents and turning the sleeve down into the pipe to form a waterproof joint; or tack-welded or banded-metal rain shield round the pipe and sealing as indicated.

3.8.5 Waterproofing Clamping Flange

Pipe passing through wall waterproofing membrane shall be sleeved as specified. In addition, a waterproofing clamping flange shall be installed as indicated.

3.8.6 Fire Seal

Where pipes pass through fire walls, fire partitions, fire rated pipe chase walls or floors above grade, a fire seal shall be provided as specified in Section 07270 FIRESTOPPING.

3.8.7 Escutcheons

Escutcheons shall be provided at all finished surfaces where exposed piping, bare or covered, passes through floors, walls, or ceilings, except in boiler, utility, or equipment rooms. Escutcheons shall be fastened securely to pipe sleeves or to extensions of sleeves without any part of sleeves being visible. Where sleeves project slightly from floors, special deep-type escutcheons shall be used. Escutcheons shall be chromium-plated iron or chromium-plated brass, either one-piece or split pattern, held in place by internal spring tension or setscrew.

3.9 ANCHORS

Anchors shall be provided where necessary or indicated to localize expansion or prevent undue strain on piping. Anchors shall consist of heavy steel collars with lugs and bolts for clamping and attaching anchor braces, unless otherwise indicated. Anchor braces shall be installed using turnbuckles where required. Supports, anchors, or stays shall not be attached in places where construction will be damaged by installation operations or by the weight or expansion of the pipeline.

3.10 PIPE EXPANSION

The expansion of supply and return pipes shall be provided for by changes in the direction of the run of pipe, by expansion loops, or by expansion joints as indicated. Low temperature water joints may be one of the types specified.

3.10.1 Expansion Loops

Expansion loops shall provide adequate expansion of the main straight runs of the system within the stress limits specified in ASME B31.1. The loops shall be cold-sprung and installed where indicated. Pipe guides shall be provided as indicated.

3.11 VALVES AND EQUIPMENT ACCESSORIES

3.11.1 Valves and Equipment

Valves shall be installed at the locations shown or specified, and where required for the proper functioning of the system as directed. Gate valves shall be used unless otherwise indicated, specified, or directed. Valves shall be installed with their stems horizontal to or above the main body of the valve. Valves used with ferrous piping shall have threaded or flanged ends and sweat-type connections for copper tubing.

3.11.2 Thermometer Socket

A thermometer well shall be provided in each return line for each circuit in multicircuit systems.

3.11.3 Air Vents

Vents shall be installed where indicated, and on all high points and piping offsets where air can collect or pocket.

3.12 UNIT HEATERS

Unit heaters shall be installed as indicated and in accordance with the manufacturer's instructions.

3.13 INSULATION

Thickness of insulation materials for piping and equipment and application shall be in accordance with Section 15250 THERMAL INSULATION FOR MECHANICAL SYSTEMS.

3.14 PUMPS - BASE MOUNTED

Provide 6 mm neoprene waffle pad between pump base and housekeeping pad.

3.15 TESTING AND CLEANING

3.15.1 Pressure Testing

The Contractor shall notify the Contracting Officer 14 days before the tests are to be conducted. The tests shall be performed in the presence of the Contracting Officer. The Contractor shall furnish all instruments and

personnel required for the tests. Electricity, steam, and water will be furnished by the Government. All test results shall be accepted before thermal insulation is installed. The entire low temperature heating system, including heat exchanger, radiators and fittings, shall be hydrostatically tested and proved tight under a pressure of 310 kPa for a period of four hours.

3.15.2 Cleaning

After the hydrostatic tests have been made and prior to the operating tests, the heat exchanger and piping shall be thoroughly cleaned by filling the system with a solution of 0.5 kg of caustic soda or 0.5 kg of trisodium phosphate per 200 L of water. Observe the proper safety precautions in the handling and use of these chemicals. The water shall be heated to approximately 66 degrees C, and the solution circulated in the system for a period of 48 hours, then drained and the system thoroughly flushed out with fresh water. Equipment shall be wiped clean, with all traces of oil, dust, dirt, or paint spots removed. The Contractor shall be responsible for maintaining the system in a clean condition until final acceptance. Bearings shall be lubricated with oil or grease as recommended by the manufacturer.

3.15.3 Water Treatment Testing

3.15.3.1 Water Quality Test

The heating water shall be analyzed prior to the acceptance of the facility and a minimum of once a month for a period of one year by the water treatment company. The analysis shall include the following information recorded in accordance with ASTM D 596.

Date of Sample	_____	
Temperature	_____	degrees C
Silica (SiO2)	_____	ppm (mg/1)
Insoluble	_____	ppm (mg/1)
Iron and Aluminum Oxides	_____	ppm (mg/1)
Calcium (Ca)	_____	ppm (mg/1)
Magnesium (Mg)	_____	ppm (mg/1)
Sodium and Potassium (Na and K)	_____	ppm (mg/1)
Carbonate (HCO3)	_____	ppm (mg/1)
Sulfate (SO4)	_____	ppm (mg/1)
Chloride (C1)	_____	ppm (mg/1)
Nitrate (NO3)	_____	ppm (mg/1)
Turbidity	_____	unit
pH	_____	
Residual Chlorine	_____	ppm (mg/1)
Total Alkalinity	_____	ppm (meq/1)
Noncarbonate Hardness	_____	epm (meq/1
Total Hardness	_____	epm (meq/1)
Dissolved Solids	_____	ppm (mg/1)
Fluorine	_____	ppm (mg/1)
Conductivity	_____	microsiemens/cm

3.16 TESTING, ADJUSTING AND BALANCING

Except as specified herein, testing, adjusting, and balancing shall be in accordance with Section 15990 TESTING, ADJUSTING, AND BALANCING OF HVAC SYSTEMS.

3.17 MANUFACTURER'S SERVICES

Services of a manufacturer's representative who is experienced in the installation, adjustment, and operation of the equipment specified shall be provided. The representative shall supervise the installation, adjustment, and testing of the equipment.

3.18 FRAMED INSTRUCTIONS

Framed instructions containing wiring and control diagrams under glass or in laminated plastic shall be posted where directed. Condensed operating instructions, prepared in typed form, shall be framed as specified above and posted beside the diagrams. The framed instructions shall be posted before acceptance testing of the system.

3.19 FIELD TRAINING

A field training course shall be provided for designated operating and maintenance staff members. Training shall be provided for a total period of 4 hours of normal working time and shall start after the system is functionally complete but prior to final acceptance tests. Field training shall cover all of the items contained in the operating and maintenance manuals.

END OF SECTION

SECTION 15569

WATER HEATING; GAS; UP TO 20 MBTUH

1 GENERAL

1.1 REFERENCES

The publications listed below form a part of this specification to the extent referenced. The publications are referred to in the text by basic designation only.

AIR MOVEMENT AND CONTROL ASSOCIATION (AMCA)

AMCA Pub-801	(1992) Industrial Process/Power Generation Fans

AMERICAN NATIONAL STANDARDS INSTITUTE (ANSI)

ANSI Z21.13	(1991; Z21.13a; Z21.13b) Gas-Fired Low-Pressure Steam and Hot Water Boilers

AMERICAN SOCIETY FOR TESTING AND MATERIALS (ASTM)

ASTM A 47	(1990) Ferritic Malleable Iron Castings
ASTM A 53	(1993a) Pipe, Steel, Black and Hot-Dipped, Zinc-Coated Welded and Seamless
ASTM A 105	(1996) Forgings, Carbon Steel, for Piping Components
ASTM A 106	(1994) Seamless Carbon Steel Pipe for High-Temperature Service
ASTM A 167	(1993) Stainless and Heat-Resisting Chromium-Nickel Steel Plate, Sheet, and Strip
ASTM A 183	(1983, R 1990) Carbon Steel Track Bolts and Nuts
ASTM A 193	(1996) Alloy-Steel and Stainless Steel Bolting Materials for High-Temperature Service
ASTM A 234	(1996) Piping Fittings of Wrought Carbon Steel and Alloy Steel for Moderate and Elevated Temperatures
ASTM A 366	(1991; R 1993) Steel, Sheet, Carbon, Cold-Rolled, Commercial Quality
ASTM A 515	(1992) Pressure Vessel Plates, Carbon Steel, for Intermediate- and Higher-Temperature Service
ASTM A 516	(1990) Pressure Vessel Plates, Carbon Steel, for Moderate- and Lower-Temperature Service

ASTM A 526	(1990) Steel Sheet, Zinc-Coated (Galvanized) by the Hot-Dip Process, Commercial Quality
ASTM A 536	(1984; R 1993) Ductile Iron Castings
ASTM B 32	(1995) Solder Metal
ASTM B 62	(1993) Composition Bronze or Ounce Metal Castings
ASTM B 75	(1993) Seamless Copper Tube
ASTM B 88	(1993a) Seamless Copper Water Tube
ASTM B 813	(1993) Liquid and Paste Fluxes for Soldering Applications of Copper and Copper Alloy Tube
ASTM B 828	(1992) Making Capillary Joints by Soldering of Copper and Copper-Alloy Tube and Fittings
ASTM C 27	(1993) Fireclay and High-Alumina Refractory Brick
ASTM C 34	(1993) Structural Clay Load-Bearing Wall Tile
ASTM C 155	(1988; R 1992) Classification of Insulating Firebrick
ASTM C 401	(1991) Alumina and Alumina Silicate Castable Refractories
ASTM D 596	(1991) Reporting Results of Analysis of Water
ASTM D 1784	(1992) Rigid Poly(Vinyl Chloride) (PVC) Compounds and Chlorinated Poly(Vinyl Chloride) (CPVC) Compounds
ASTM D 2000	(1990; R 1994) Rubber Products in Automotive Applications
ASTM F 872	(1984; R 1990) Filter Units, Air Conditioning: Viscous-Impingement Type, Cleanable
ASTM F 1097	(1991) Mortar, Refractory (High-Temperature, Air-Setting)
ASTM F 1139	(1988; R 1993) Standard Specification for Steam Traps and Drains

AMERICAN SOCIETY OF MECHANICAL ENGINEERS (ASME)

ASME B1.20.1	(1983; R 1992) Pipe Threads, General Purpose (Inch)
ASME B16.3	(1992) Malleable Iron Threaded Fittings

ASME B16.4	(1992) Cast Iron Threaded Fittings
ASME B16.5	(1988; Errata Oct 88; B16.5a) Pipe Flanges and Flanged Fittings
ASME B16.9	(1993) Factory-Made Wrought Steel Buttwelding Fittings
ASME B16.11	(1991) Forged Fittings, Socket-Welding and Threaded
ASME B16.15	(1985; R 1994) Cast Bronze Threaded Fittings Classes 125 and 250
ASME B16.18	(1984; R 1994) Cast Copper Alloy Solder Joint Pressure Fittings
ASME B16.21	(1992) Nonmetallic Flat Gaskets for Pipe Flanges
ASME B16.22	(1989) Wrought Copper and Copper Alloy Solder Joint Pressure Fittings
ASME B16.26	(1988) Cast Copper Alloy Fittings for Flared Copper Tubes
ASME B16.34	(1988) Valves - Flanged, Threaded and Welding End
ASME B16.39	(1986; R 1994) Malleable Iron Threaded Pipe Unions Classes 150, 250, and 300
ASME B19.3	(1991; B19.3a) Safety Standard for Compressors for Process Industries
ASME B31.1	(1995) Power Piping
ASME B31.5	(1992; B31.5a) Refrigeration Piping
ASME B40.1	(1991) Gauges - Pressure Indicating Dial Type - Elastic Element
ASME BPV IV	(1995; Addenda Dec 1995) Boiler and Pressure Vessel Code; Section IV, Heating Boilers
ASME BPV VIII Div 1	(1995; Addenda Dec 1995) Boiler and Pressure Vessel Code; Section VIII, Pressure Vessels Division 1 - Basic Coverage
ASME BPV IX	(1995; Addenda Dec 1995) Boiler and Pressure Vessel Code; Section IX, Welding and Brazing Qualifications
ASME CSD-1	(1992; CSD-1a; CSD1b) Controls and Safety Devices for Automatically Fired Boilers

ASME PTC 10	(1965; R 1992) Compressors and Exhausters

AMERICAN WATER WORKS ASSOCIATION (AWWA)

AWWA C606	(1987) Grooved and Shouldered Joints

AMERICAN WELDING SOCIETY (AWS)

AWS A5.8	(1992) Filler Metals for Brazing and Braze Welding
AWS B2.2	(1991) Brazing Procedure and Performance Qualification

COMMERCIAL ITEM DESCRIPTIONS (CID)

CID A-A-1419	(Rev D) Filter Element, Air Conditioning (Viscous-Impingement and Dry Types, Replaceable)

COPPER DEVELOPMENT ASSOCIATION (CDA)

CDA 404/0-RR	(1993) Copper Tube for Plumbing, Heating, Air Conditioning and Refrigeration

EXPASION JOINT MANUFACTURERS ASSOCIATION (EJMA)

EJMA-01	(1993) EJMA Standards

HYDRONICS INSTITUTE (HYI)

HYI-IBR Ratings	(1994) I=B=R Ratings for Boilers, Baseboard Radiation and Finned Tube (Commercial) Radiation

MANUFACTURERS STANDARDIZATION SOCIETY OF THE VALVE AND FITTINGS INDUSTRY (MSS)

MSS SP-25	(1993) Standard Marking System for Valves, Fittings, Flanges and Unions
MSS SP-58	(1993) Pipe Hangers and Supports - Materials, Design and Manufacture
MSS SP-69	(1991) Pipe Hangers and Supports - Selection and Application
MSS SP-70	(1990) Cast Iron Gate Valves, Flanged and Threaded Ends
MSS SP-71	(1990) Cast Iron Swing Check Valves, Flanges and Threaded Ends
MSS SP-72	(1992) Ball Valves with Flanged or Buttwelding Ends for General Service

MSS SP-73	(1991) Brazing Joints for Copper and Copper Alloy Pressure Fittings
MSS SP-78	(1987; R 1992) Cast Iron Plug Valves, Flanged and Threaded Ends
MSS SP-80	(1987) Bronze Gate, Globe, Angle and Check Valves
MSS SP-85	(1994) Cast Iron Globe & Angle Valves, Flanged and Threaded Ends
MSS SP-110	(1992) Ball Valves Threaded, Socket Welding, Solder Joint, Grooved and Flared Ends

NATIONAL ELECTRICAL MANUFACTURERS ASSOCIATION (NEMA)

NEMA 250	(1991) Enclosures for Electrical Equipment (1000 Volts Maximum)

NATIONAL FIRE PROTECTION ASSOCIATION (NFPA)

NFPA 31	(1992) Installation of Oil Burning Equipment
NFPA 54	(1992) National Fuel Gas Code
NFPA 70	(1993) National Electrical Code
NFPA 85C	(1991) Prevention of Furnace Explosions/Implosions in Multiple Burner Boiler-Furnaces
NFPA 211	(1992) Chimneys, Fireplaces, Vents and Solid Fuel-Burning Appliances
NFPA 8501	(1992) Single Burner Boiler Operations

UNDERWRITERS LABORATORIES (UL)

UL-06	(1994; Supple) Gas and Oil Equipment Directory
UL 296	(1994; Rev Aug 1995) Oil Burners
UL 726	(1995) Oil-Fired Boiler Assemblies
UL 795	(1994) Commercial-Industrial Gas Heating Equipment
UL 1738	(1993) Venting Systems for Gas-Burning Appliances, Categories II, III and IV

1.2 GENERAL REQUIREMENTS

1.2.1 Standard Products

Materials and equipment shall be the standard products of a manufacturer regularly engaged in the manufacture of the products and shall essentially duplicate items that have been in satisfactory use for at least 2 years prior to bid opening. Equipment shall be supported by a service organization that is, in the opinion of the Contracting Officer, reasonably convenient to the site.

1.2.2 Asbestos Prohibition

Asbestos and asbestos-containing products shall not be used.

1.2.3 Nameplates

Each major component of equipment shall have the manufacturer's name, address, type or style, model or serial number, and catalog number on a plate secured to the equipment. Each pressure vessel shall have an approved ASME stamp.

1.2.4 Equipment Guards

Belts, pulleys, chains, gears, couplings, projecting setscrews, keys, and other rotating parts exposed to personnel contact shall be fully enclosed or guarded in accordance with OSHA requirements. High temperature equipment and piping exposed to contact by personnel or where it creates a potential fire hazard shall be properly guarded or covered with insulation of a type specified. Catwalks, operating platforms, ladders, and guardrails shall be provided where shown and shall be constructed in accordance with Section 05500 MISCELLANEOUS METAL.

1.2.5 Verification of Dimensions

The Contractor shall become familiar with details of the work, verify dimensions in the field, and shall advise the Contracting Officer of any discrepancy before performing any work or ordering any materials.

1.2.6 Welding

Boilers and piping shall be welded and brazed in accordance with qualified procedures using performance-qualified welders and welding operators. Procedures and welders shall be qualified in accordance with ASME BPV IX. Welding procedures qualified by others, and welders and welding operators qualified by another employer may be accepted as permitted by ASME B31.1. The Contracting Officer shall be notified 24 hours in advance of tests, and the tests shall be performed at the work site if practical. The welder or welding operator shall apply his assigned symbol near each weld he makes as a permanent record. Structural members shall be welded in accordance with Section 05055 WELDING, STRUCTURAL.

1.3 SUBMITTALS

Government approval is required for submittals with a "GA" designation; submittals having an "FIO" designation are for information only. The

following shall be submitted in accordance with Section 01330 SUBMITTAL PROCEDURES:

SD-01 Data

Manufacturer's Catalog Data; FIO.

Manufacturer's catalog data shall be included with the detail drawings for the following items:

Boilers
Fuel Burning Equipment
Combustion Control Equipment
Pumps
Fittings and Accessories

The data shall show model, size, options, etc., that are intended for consideration. Data submitted shall be adequate to demonstrate compliance with contract requirements.

Spare Parts Data; FIO.

Spare parts data for each different item of material and equipment, after approval of the detail drawings and no later than 2 months prior to the date of beneficial occupancy. The data shall include a complete list of parts and supplies, with current unit prices and source of supply, and a list of the parts recommended by the manufacturer to be replaced after 1 and 3 years of service.

Heating and Fuel Systems Test Procedures; FIO.

Proposed test procedures for the heating system tests and fuel system tests, at least 2 weeks prior to the start of related testing.

Welding Procedures; FIO.

A copy of qualified welding procedures, at least 2 weeks prior to the start of welding operations.

Qualification; FIO.

A statement from the firms proposed to prepare submittals and perform installation and testing, demonstrating successful completion of similar services of at least five projects of similar size or scope, at least 2 weeks prior to the submittal of any other item required by this section.

Welding Qualification; FIO.

A list of names and identification symbols of qualified welders and welding operators, at least 2 weeks prior to the start of welding operations.

SD-04 Drawings

Heating System; FIO.

Detail drawings consisting of boiler room equipment layout including installation details and electrical connection diagrams; combustion and

safety control diagrams. Drawings shall include any information required to demonstrate that the system has been coordinated and will properly function as a unit and shall show equipment relationship to other parts of the work, including clearances required for operation and maintenance.

SD-06 Instructions

Posted Instructions; FIO.

System layout diagrams that show the layout of equipment, piping, and ductwork and typed condensed operation manuals explaining preventative maintenance procedures, methods of checking the system for normal, safe operation, and procedures for safely starting and stopping the system, framed under glass or laminated plastic, at least 2 weeks prior to the start of related testing. After approval, these items shall be posted where directed.

SD-07 Schedules

Tests; FIO.

Proposed test schedules for the heating system and fuel system tests, at least 2 weeks prior to the start of related testing.

SD-09 Reports

Heating System and Fuel System Tests; FIO.

Test reports for the heating system tests and the fuel system test, upon completion of testing complete with results.

SD-13 Certificates

Bolts; FIO.

Written certification by the bolt manufacturer that the bolts furnished comply with the requirements of this specification. The certification shall include illustrations of product markings, the date of manufacture, and the number of each type of bolt to be furnished based on this certification.

Boiler Emissions; FIO.

Written certification by the boiler manufacturer that each boiler furnished complies with Federal, state, and local regulations for emissions. The certification shall also include a description of applicable emission regulations. If any boiler is exempt from the emission regulations, the certification shall indicate the reason for the exemption.

SD-19 Operation and Maintenance Manuals

Heating System; FIO.

Six complete manuals listing step-by-step procedures required for system startup, operation, shutdown, and routine maintenance, at least 2 weeks prior to field training. The manuals shall include the manufacturer's name, model number, parts list, simplified wiring and control diagrams, troubleshooting guide, and recommended service organization (including

address and telephone number) for each item of equipment. Each service organization shall be capable of providing 4 hour onsite response to a service call on an emergency basis.

1.4 MANUFACTURER'S SERVICES

Services of a manufacturer's representative who is experienced in the installation, adjustment, and operation of the equipment specified shall be provided. The representative shall supervise the installing, adjusting, and testing of the equipment.

1.5 DELIVERY AND STORAGE

Equipment delivered and placed in storage shall be protected from the weather, humidity and temperature variations, dirt and dust, and other contaminants.

2 PRODUCTS

2.1 BOILERS

Natural gas fired, forced draft, copper fin tube type boiler. The boiler shall be furnished complete with the gas burning equipment, boiler fittings and trim, boiler circulation pump, automatic controls, forced draft fan, wall flue cap and fan, boiler control panel, electrical wiring, insulation, piping connections, and factory painted protective jacket. The boiler shall be completely assembled and tested at the manufacturer's plant. Boiler auxiliaries including fans, motors, drives, and similar equipment shall be provided with at least 10 percent excess capacity to allow for field variations in settings and to compensate for any unforeseen increases in pressure losses in appurtenant piping and ductwork. However, the boiler safety devices shall not be sized for a 10 percent excess capacity. The boiler and its accessories shall be designed and installed to permit ready accessibility for operation, maintenance, and service. Boilers shall be designed, constructed, and equipped in accordance with ASME BPV IV. Each boiler shall be of the watertube type and designed for water service as specified herein. The boiler capacity shall be based on the ratings shown in HYI-IBR Ratings or as certified by the American Boiler Manufacturers Association, or American Gas Association.

2.1.1 Combustion Chamber

Horizontal grid finned tube exchanger assembled within combustion chamber tested for maximum working pressure of 160 psig. Copper tube exchanger with extruded copper fins and cast iron header. Combustion chamber lined with interlocking refractory insulating panels of vermiculite, high temperature cements, asbestos fiber and refractory clay for service temperatures to 2100 degrees F. The heat input rate shall not be greater than 12,000 Btu/hr per square ft. based on internal heater area.

2.1.2 Fuel Burning Equipment

Boiler shall be designed to burn natural gas. Each boiler shall comply with Federal, state, and local emission regulations. As a minimum, the following emission requirements shall be met:

NOx - 10 parts per million (ppm) corrected to 3% 02

2.1.2.1 Gas Burners and Controls

UL approved stainless steel burners for modulating firing of natural gas fuel with proportional combustion air supply, gas pressure regulator capable of reducing 2 psig gas down to boiler operating pressure, diaphragm gas valves, manual shut-off, hot surface ignition, thermistor flame sensing device, and automatic 100 percent safety gas shut-off. Galvanized steel enclosure with factory applied baked enamel, insulated with foil faced fiberglass insulation.

Provide mechanical draft burners with all air necessary for combustion supplied by a blower where the operation is coordinated with the burner. Burner shall be provided complete with fuel supply system in conformance with UL 795 and local safety codes.

2.1.2.2 Burner Safety Controls

Energize ignition, limit time for establishment of flame, prevent opening of gas valve until pilot flame is proven, stop gas flow on ignition failure, energize blower motor, and after air flow is proven allow gas valve to open.

2.1.3 Draft Fans

Fans conforming to AMCA Pub-801 forced-draft shall be furnished as an integral part of boiler design. Fans shall be centrifugal with backward-curved blades or axial flow type. Each fan shall be sized for output volume and static pressure rating sufficient for pressure losses, excess air requirements at the burner, leakages, temperature, and elevation corrections for worst ambient conditions, all at full combustion to meet net-rated output at normal firing conditions, plus an overall excess air volume of 10 percent against a 20 percent static overpressure. Fans shall be designed for direct intake of combustion air and direct vent of products of combustion. Noise levels for fans shall not exceed 85 decibels in any octave band at a 3 foot station. Forced draft fan bearings shall be air cooled.

2.1.3.1 Draft Fan Control

Forced-draft centrifugal fans shall have inlet vane controls or shall have variable speed control where indicated. Inlet vanes shall be suitable for use with combustion control equipment.

2.1.3.2 Draft Fan Drives

Fans shall be driven by electric motors. Electric motor shall be drip proof. Motor starter shall be magnetic across-the-line type with general purpose enclosure and shall be furnished with four auxiliary interlock contacts.

2.1.3.3 Draft Damper

Boilers shall be provided with manual dampers, draft hoods, or barometric dampers as recommended by the boiler manufacturer to maintain proper draft in the boiler. Draft damper shall be provided in a convenient and accessible location in the flue gas outlet from the boiler.

2.1.4 Individual Boiler Control Panel

Provide integral control panel for each boiler. Combustion safety controls and equipment shall be UL listed, microprocessor-based distributed process controller. The controller shall be composed of an EPROM type chip. The controller shall be mounted completely wired, programmed, debugged, and tested to perform all of its functions. The controller shall process the signals for complete control and monitoring of the boiler. This shall include maintaining boiler status, starting and stopping all control functions, sequencing control functions and signaling alarm conditions. The program shall be documented and include cross references in description of coils and contacts. Microprocessor shall be able to perform self diagnostics and contain a message center to provide operator with status and failure mode information. Controllers for each boiler shall be integral to the boiler. Control systems and safety devices for automatically fired boilers shall conform to ASME CSD-1. Electrical combustion and safety controls shall be rated at 120 volts, single phase, 60 Hz and shall be connected as specified in Section 16415 ELECTRICAL WORK, INTERIOR.

2.1.5 Boiler Safety Devices

Provide the following devices wired to shut down boiler and initiate an alarm signal. (Manual reset required.)

a. High temperature cut-out.

b. Low water.

c. Powered vent cap proving switch.

d. Water flow switch.

2.1.5.1 Temperature Pressure Relief Valve

Provide ASME temperature/pressure relief valve rated for 50 psig. Pipe discharge to floor drain.

2.1.5.2 Alarm Bell

A 4 inch alarm bell shall be provided and shall be located as directed. The alarm bell shall ring when the boiler is shut down by any safety control or interlock. An alarm silence button shall be provided on the master boiler control panel.

2.2 MASTER BOILER CONTROL PANEL

Factory fabricated boiler control panel designed to sequence and monitor multiple boilers in response to external enable signal from building DDC system. Panel shall perform the following functions:

a. Sequence boiler firing to maintain boiler loop temperature setpoint.

b. Start and stop individual boiler circulation pumps.

c. Monitor individual boiler control panels for alarm conditions.

d. Rotate designation of lead/lag boiler based on boiler run time.

e. Communicate with the building DDC system as indicated.

f. Visually indicate boiler status.

g. Automatically switch to lag boiler upon failure of lead.

h. Activate boiler alarm bell on any safety shut-down.

Panel shall be equipped with face mounted indicator lights to display each boiler's operating status including:

a. Lead boiler

b. Burner status

c. Alarm status

d. Panel enable/disable

2.3 PUMPS

2.3.1 Boiler Circulating Pumps (BCP-1, BCP-2)

Circulating pumps for hot water shall be electrically driven single-stage centrifugal type and have a capacity not less than indicated. Boiler circulating pumps shall be supported by the piping on which installed and shall be closed-coupled shaft or flexible-coupled shaft. The pump shaft shall be constructed of corrosion-resistant alloy steel, sleeve bearings and glands of bronze designed to accommodate a mechanical seal, and the housing of close-grained cast iron. Pump seals shall be capable of withstanding 240 degrees F temperature without external cooling. The motor shall have sufficient power for the service required, shall be of a type approved by the manufacturer of the pump, shall be suitable for the available electric service, and shall conform to the requirements of paragraph ELECTRICAL EQUIPMENT. Each pump suction and discharge connection shall be provided with a pressure gauge as specified. The boiler circulating pump discharge pipe shall be provided with a flow switch. Flow switch unit shall be a self-contained swinging vane type to indicate fluid flow. Switch shall be a SPDT with 120-volt, 15-ampere rating.

2.4 FITTINGS AND ACCESSORIES

Boiler fittings and accessories shall be installed with each boiler in accordance with ASME BPV IV, unless otherwise specified.

2.4.1 Flue Venting

Type "B" vent. Inner flue diameter shall not be smaller than boiler flue outlet size. Provide barometric damper near the connection point to boiler.

2.4.2 Sidewall Vent Cap

Fan powered sidewall venting system provided by boiler manufacturer and matched to the boiler performance. A fan proving switch shall be

interlocked with the boiler control panel to prevent boiler operation until flow is proven.

2.5 STEEL PIPE AND FITTINGS

Pipe and fittings shall be as specified in Section 15556 HOT WATER HEATING AND CHILLED WATER SYSTEMS.

2.6 ELECTRICAL EQUIPMENT

Electric motor-driven equipment shall be provided complete with motors, motor starters, and necessary control devices. Electrical equipment, motor control devices, motor efficiencies and wiring shall be as specified in Section 16415 ELECTRICAL WORK, INTERIOR. Motors which are not an integral part of a packaged boiler shall be rated for standard efficiency service. Motors which are an integral part of the packaged boiler shall be the highest efficiency available by the manufacturer of the packaged boiler. Motor starters shall be provided complete with properly sized thermal overload protections and other appurtenances necessary for the motor control specified. Starters shall be furnished in general purpose enclosures. Manual or automatic control and protective or signal devices required for the operation specified and any control wiring required for controls and devices but not shown shall be provided.

2.6.1 Motor Ratings

Motors shall be suitable for the voltage and frequency provided. Motors 375 W and larger shall be three-phase, unless otherwise indicated. Motors shall be of sufficient capacity to drive the equipment at the specified capacity without exceeding the nameplate rating on the motor.

2.6.2 Motor Controls

Motor controllers shall be provided complete with properly sized thermal overload protection. Manual or automatic control and protective or signal devices required for the operation specified and any wiring required to such devices shall be provided. Where two-speed or variable-speed motors are indicated, solid-state variable-speed controllers may be provided to accomplish the same function. Solid state variable speed controllers shall be utilized for fractional through 7.46 kW ratings. Adjustable frequency drives shall be used for larger motors.

2.7 INSULATION

Shop and field-applied insulation shall be as specified in Section 15250 THERMAL INSULATION FOR MECHANICAL SYSTEMS.

2.8 TOOLS

Special tools shall be furnished. Special tools shall include uncommon tools necessary for the operation and maintenance of boilers, burners, pumps, fans, controls, meters, special piping systems, and other equipment. Small hand tools shall be furnished within a suitable cabinet, mounted where directed.

2.9 START UP AND WARRANTY

Complete heat exchanger assembly shall carry a five year warranty. Boiler manufacturer's representative shall provide an on-site factory authorized technician for initial start up and final commissioning of boilers.

3 EXECUTION

3.1 ERECTION OF BOILER AND AUXILIARY EQUIPMENT

Boiler and auxiliary equipment shall be installed in accordance with manufacturer's written instructions. Proper provision shall be made for expansion and contraction between boiler foundation and floor. This joint shall be packed with suitable nonasbestos rope and filled with suitable compound that will not become soft at a temperature of 104 degrees F. Boilers and firing equipment shall be supported from the foundations by structural steel completely independent of all brickwork. Boiler supports shall permit free expansion and contraction of each portion of the boiler without placing undue stress on any part of the boiler or setting. Boiler breeching shall be as indicated with full provision for expansion and contraction between all interconnected components.

3.2 PIPING INSTALLATION

As specified in Section 15556 HOT WATER HEATING SYSTEMS.

3.3 GAS FUEL SYSTEM

Gas piping, fittings, valves, regulators, tests, cleaning, and adjustments shall be in accordance with the Section 15488 GAS PIPING SYSTEMS. NFPA 54 shall be complied with unless otherwise specified. Burners, pilots, and all accessories shall be listed in UL-06. The fuel system shall be provided with a gas tight, manually operated, UL listed stop valve at the gas-supply connections, a gas strainer, a pressure regulator, pressure gauges, a burner-control valve, a safety shutoff valve suitable for size of burner and sequence of operation, and other components required for safe, efficient, and reliable operation as specified. Approved permanent and ready facilities to permit periodic valve leakage tests on the safety shutoff valve or valves shall be provided.

3.4 FIELD PAINTING

Ferrous metal not specified to be coated at the factory shall be cleaned, prepared, and painted as specified in Section 09900 PAINTING, GENERAL. Exposed pipe covering shall be painted as specified in Section 09900 PAINTING, GENERAL. Aluminum sheath over insulation shall not be painted.

3.5 HEATING SYSTEM TESTS

Before any covering is installed on pipe or heating equipment, the entire heating system's piping, fittings, and terminal heating units shall be hydrostatically tested and proved tight at a pressure of 1-1/2 times the design working pressure. Before pressurizing system for test, items or equipment (e.g., vessels, pumps, instruments, controls, relief valves) rated for pressures below the test pressure shall be blanked off or replaced with spool pieces. Before balancing and final operating test, test blanks and spool pieces shall be removed; and protected instruments and equipment shall

be reconnected. With equipment items protected, the system shall be pressurized to test pressure. Pressure shall be held for a period of time sufficient to inspect all welds, joints, and connections for leaks, but not less than 2 hours. No loss of pressure will be allowed. Leaks shall be repaired and repaired joints shall be retested. Caulking of joints shall not be permitted. System shall be drained and after instruments and equipment are reconnected, the system shall be refilled with service medium and maximum operating pressure applied. The pressure shall be held while inspecting these joints and connections for leaks. The leaks shall be repaired and the repaired joints retested. Upon completion of hydrostatic tests and before acceptance of the installation, the Contractor shall balance the heating system in accordance with Section 15990TESTING, ADJUSTING AND BALANCING OF HVAC SYSTEMS; and operating tests required to demonstrate satisfactory functional and operational efficiency shall be performed. The operating test shall cover a period of at least 24 hours for each system, and shall include, as a minimum, the following specific information in a report, together with conclusions as to the adequacy of the system:

a. Certification of balancing.

b. Time, date, and duration of test.

c. Outside and inside dry bulb temperatures.

d. Temperature of hot water supply leaving boiler loop.

e. Temperature of heating return water from system.

f. Boiler inlet and outlet temperatures.

g. Boiler make, type, serial number, design pressure, and rated capacity.

h. Fuel burner make, model, and rated capacity; ammeter and voltmeter readings for burner motor.

i. Circulating pump make, model, and rated capacity, and ammeter and voltmeter readings for pump motor during operation.

j. Flue-gas temperature at boiler outlet.

k. Percent carbon dioxide in flue-gas.

l. Grade or type and calorific value of fuel.

m. Draft at boiler flue-gas exit.

n. Draft or pressure in furnace.

o. Quantity of water circulated.

p. Quantity of fuel consumed.

q. Stack emission pollutants concentration.

Indicating instruments shall be read at half-hour intervals unless otherwise directed. The Contractor shall furnish all instruments, equipment, and personnel required for the tests and balancing. Fuels, water, and electricity shall be obtained as specified in the SPECIAL CLAUSES. Operating tests shall demonstrate that fuel burners and combustion and safety controls meet the requirements of NFPA 8501.

3.5.1.1 Boiler/Piping Test

At the conclusion of the 1 year period, the boiler piping shall be inspected for problems due to corrosion and scale. If the boiler is found not to conform to the manufacturer's recommendations, and the water treatment company recommendations have been followed, the water treatment company shall provide all chemicals and labor for cleaning or repairing the equipment as required by the manufacturer's recommendations. If corrosion is found within the condensate piping, proper repairs shall be made by the water treatment company.

3.6 CLEANING

3.6.1 Boilers and Piping

After the hydrostatic tests have been made and before the system is balanced and operating tests are performed, the boilers and feed water piping shall be thoroughly cleaned by filling the system with a solution consisting of either 1 pound of caustic soda or 1 pound of trisodium phosphate per 50 gallons of water. The proper safety precautions shall be observed in the handling and use of these chemicals. The water shall be heated to approximately 150 degrees F and the solution circulated in the system for a period of 48 hours. The system shall then be drained and thoroughly flushed out with fresh water. Strainers and valves shall be thoroughly cleaned. Prior to operating tests, air shall be removed from all water systems by operating the air vents.

3.7 FUEL SYSTEM TESTS

3.7.1 Gas System Test

The gas fuel system shall be tested in accordance with the test procedures outlined in NFPA 54.

3.8 FIELD TRAINING

The Contractor shall conduct a training course for the operating staff as designated by the Contracting Officer. The training period shall consist of a total of 8 hours of normal working time and shall start after the system is functionally completed but prior to final acceptance tests. The field instructions shall cover all of the items contained in the operating and maintenance instructions, as well as demonstrations of routine maintenance operations and boiler safety devices. The Contracting Officer shall be notified at least 14 days prior to date of proposed conduction of the training course.

END OF SECTION

SECTION 15650

CENTRAL REFRIGERATED AIR-CONDITIONING SYSTEM

1 GENERAL

1.1 REFERENCES

The publications listed below form a part of this specification to the extent referenced. The publications are referred to in the text by basic designation only.

AIR CONDITIONING AND REFRIGERATION INSTITUTE (ARI)

ARI 210/240	(1989) Unitary Air-Conditioning and Air-Source Heat Pump Equipment
ARI 365	(1987) Commercial and Industrial Unitary Air-Conditioning Condensing Units
ARI 450	(1987) Water-Cooled Refrigerant Condensers, Remote Type
ARI 460	(1994) Remote Mechanical-Draft Air-Cooled Refrigerant Condensers
ARI 495	(1993) Refrigerant Liquid Receivers
ARI 520	(1990) Positive Displacement Refrigerant Compressors, Compressor Units and Condensing Units
ARI 550	(1992) Centrifugal or Rotary Screw Water-Chilling Packages
ARI 560	(1992) Absorption Water-Chilling Packages
ARI 575	(1987) Method of Measuring Machinery Sound Within an Equipment Space
ARI 590	(1992) Reciprocating Water-Chilling Packages
ARI 700	(1993) Specifications for Fluorocarbon and Other Refrigerants
ARI 710	(1986) Liquid-Line Driers
ARI 720	(1988) Refrigerant Access Valves and Hose Connectors
ARI 750	(1987) Thermostatic Refrigerant Expansion Valves
ARI 760	(1987) Solenoid Valves for Use with Volatile Refrigerants

AMERICAN BEARING MANUFACTURERS ASSOCIATION (ABEMA)

ABEMA 9	(1990) Load Ratings and Fatigue Life for Ball Bearings
ABEMA 11	(1990) Load Ratings and Fatigue Life for Roller Bearings

AMERICAN NATIONAL STANDARDS INSTITUTE (ANSI)

ANSI S1.13	(1971; R 1986) Methods for the Measurement of Sound Pressure Levels

AMERICAN SOCIETY FOR TESTING AND MATERIALS (ASTM)

ASTM A 47	(1990) Ferritic Malleable Iron Castings
ASTM A 48	(1994a) Gray Iron Castings
ASTM A 53	(1993a) Pipe, Steel, Black and Hot-Dipped, Zinc-Coated Welded and Seamless
ASTM A 106	(1994) Seamless Carbon Steel Pipe for High-Temperature Service
ASTM A 123	(1989a) Zinc (Hot-Dip Galvanized) Coatings on Iron and Steel Products
ASTM A 153	(1996) Zinc Coating (Hot-Dip) on Iron and Steel Hardware
ASTM A 181	(1994) Forgings, Carbon Steel, for General-Purpose Piping
ASTM A 183	(1983; R 1990) Carbon Steel Track Bolts and Nuts
ASTM A 193	(1996) Alloy-Steel and Stainless Steel Bolting Materials for High-Temperature Service
ASTM A 234	(1996) Piping Fittings of Wrought Carbon Steel and Alloy Steel for Moderate and Elevated Temperatures
ASTM A 307	(1994) Carbon Steel Bolts and Studs, 60 000 PSI Tensile Strength
ASTM A 334	(1991) Seamless and Welded Carbon and Alloy-Steel Tubes for Low-Temperature Service
ASTM A 536	(1984; R 1993) Ductile Iron Castings
ASTM A 733	(1993) Welded and Seamless Carbon Steel and Austenitic Stainless Steel Pipe Nipples
ASTM B 32	(1995) Solder Metal

ASTM B 62	(1993) Composition Bronze or Ounce Metal Castings
ASTM B 75	(1993) Seamless Copper Tube
ASTM B 88	(1993a) Seamless Copper Water Tube
ASTM B 117	(1994) Operating Salt Spray (Fog) Testing Apparatus
ASTM B 209	(1995) Aluminum and Aluminum-Alloy Sheet and Plate
ASTM B 210	(1995) Aluminum and Aluminum-Alloy Drawn Seamless Tubes
ASTM B 280	(1993a) Seamless Copper Tube for Air Conditioning and Refrigeration Field Service
ASTM B 395	(1993) U-Bend Seamless Copper and Copper Alloy Heat Exchanger and Condenser Tubes
ASTM B 650	(1993) Electrodeposited Engineering Chromium Coatings of Ferrous Substrates
ASTM C 67	(1994) Sampling and Testing Brick and Structural Clay Tile
ASTM C 534	(1994) Preformed Flexible Elastomeric Cellular Thermal Insulation in Sheet and Tubular Form
ASTM D 520	(1984; R 1989) Zinc Dust Pigment
ASTM D 596	(1991) Reporting Results of Analysis of Water
ASTM D 1384	(1993) Corrosion Test for Engine Coolants in Glassware
ASTM D 1784	(1992) Rigid Poly(Vinyl Chloride) (PVC) Compounds and Chlorinated Poly(Vinyl Chloride) (CPVC) Compounds
ASTM D 2000	(1990; R 1994) Rubber Products in Automotive Applications
ASTM D 3308	(1991a) PTFE Resin Skived Tape
ASTM E 84	(1995) Surface Burning Characteristics of Building Materials
ASTM F 104	(1993) Nonmetallic Gasket Materials
ASTM F 1199	(1988, R 1993) Cast (All Temperature and Pressures) and Welded Pipe Line Strainers (150 psig and 150 degrees F Maximum)

ASTM F 1200	(1988, R 1993) Fabricated (Welded) Pipe Line Strainers (Above 150 psig and 150 degrees F)

AMERICAN SOCIETY OF HEATING, REFRIGERATING AND AIR-CONDITIONING ENGINEERS (ASHRAE)

ASHRAE 15	(1994) Safety Code for Mechanical Refrigeration
ASHRAE 34	(1994) Number Designation and Safety Classification of Refrigerants
ASHRAE 64	(1995) Methods of Testing Remote Mechanical-Draft Evaporative Refrigerant Condensers

AMERICAN SOCIETY OF MECHANICAL ENGINEERS (ASME)

ASME B1.20.1	(1983; R 1992) Pipe Threads, General Purpose (Inch)
ASME B16.5	(1988; Errata Oct 88; B16.5a) Pipe Flanges and Flanged Fittings
ASME B16.9	(1993) Factory-Made Wrought Steel Buttwelding Fittings
ASME B16.11	(1991) Forged Fittings, Socket-Welding and Threaded
ASME B16.18	(1984; R 1994) Cast Copper Alloy Solder Joint Pressure Fittings
ASME B16.21	(1992) Nonmetallic Flat Gaskets for Pipe Flanges
ASME B16.22	(1989) Wrought Copper and Copper Alloy Solder Joint Pressure Fittings
ASME B16.26	(1988) Cast Copper Alloy Fittings for Flared Copper Tubes
ASME B16.39	(1986; R 1994) Malleable Iron Threaded Pipe Unions Classes 150, 250, and 300
ASME B31.1	(1995) Power Piping
ASME B31.5	(1992; B31.5a) Refrigeration Piping
ASME B40.1	(1991) Gauges - Pressure Indicating Dial Type - Elastic Element
ASME BPV VIII Div 1	(1995) Boiler and Pressure Vessel Code; Section VIII, Pressure Vessels Division 1 - Basic Coverage

ASME BPV IX	(1995) Boiler and Pressure Vessel Code; Section IX, Welding and Brazing Qualifications
ASME PTC 23	(1986; Addenda 1992; R 1992) Atmospheric Water Cooling Equipment

AMERICAN WATER WORKS ASSOCIATION (AWWA)

AWWA C606	(1987) Grooved and Shouldered Joints

AMERICAN WELDING SOCIETY (AWS)

AWS A5.8	(1992) Filler Metals for Brazing and Braze Welding
AWS D1.1	(1994) Structural Welding Code - Steel

CALIFORNIA REDWOOD ASSOCIATION (CRA)

CRA-RIS-01-SS	(1995) Standard Specifications for Grades of California Redwood Lumber

COOLING TOWER INSTITUTE (CTI)

CTI ACT 105	(1990) Acceptance Test Code for Water Cooling Towers
CTI Std-103	(1986) Standard Specifications for the Design of Cooling Towers with Redwood Lumber
CTI Std-111	(1986) Gear Speed Reducers
CTI Std-114	(1986) Specifications for the Design of Cooling Towers with Douglas Fir Lumber
CTI Std-134	(1985) Plywood for Use in Cooling Towers
CTI Std-137	(1988) Fiberglass Pultruded Structural Products for Use in Cooling Towers
CTI WMS-112	(1986) Pressure Preservative Treatment of Lumber for Industrial Water-Cooling Towers

EXPANSION JOINT MANUFACTURERS ASSOCIATION (EJMA)

EJMA-01	(1993) EJMA Standards

HYDRAULIC INSTITUTE (HI)

HI-01	(1983) Standards for Centrifugal, Rotary, & Reciprocating Pumps

MANUFACTURERS STANDARDIZATION SOCIETY OF THE VALVE AND FITTINGS INDUSTRY (MSS)

MSS SP-25	(1993) Standard Marking System for Valves, Fittings, Flanges and Unions
MSS SP-58	(1993) Pipe Hangers and Supports - Materials, Design and Manufacture
MSS SP-67	(1995) Butterfly Valves
MSS SP-69	(1991) Pipe Hangers and Supports - Selection and Application
MSS SP-70	(1990) Cast Iron Gate Valves, Flanged and Threaded Ends
MSS SP-71	(1990) Cast Iron Swing Check Valves, Flanges and Threaded Ends
MSS SP-72	(1992) Ball Valves with Flanged or Butt-Welding Ends for General Service
MSS SP-78	(1987; R 1992) Cast Iron Plug Valves, Flanged and Threaded Ends
MSS SP-80	(1987) Bronze Gate, Globe, Angle and Check Valves
MSS SP-85	(1994) Cast Iron Globe & Angle Valves, Flanged and Threaded Ends
MSS SP-110	(1992) Ball Valves Threaded, Socket Welding, Solder Joint, Grooved and Flared Ends

NATIONAL ELECTRICAL MANUFACTURERS ASSOCIATION (NEMA)

NEMA 250	(1991) Enclosures for Electrical Equipment (1000 Volts Maximum)
NEMA MG 1	(1993; Rev 1-1993; Rev 2-1995) Motors and Generators
NEMA SM 23	(1991) Steam Turbines for Mechanical Drive Service

NATIONAL FIRE PROTECTION ASSOCIATION (NFPA)

NFPA 70	(1993) National Electrical Code
NFPA 90A	(1993) Installation of Air Conditioning and Ventilating Systems
NFPA 214	(1992) Water-Cooling Towers
NFPA 255	(1990) Method of Test of Surface Burning Characteristics of Building Materials

UNDERWRITERS LABORATORIES (UL)

UL 1995	(1990) Heating and Cooling Equipment

WESTERN WOOD PRODUCTS ASSOCIATION (WWPA)

WWPA-01	(1991; Supple No. 3) Western Lumber Grading Rules 91

1.2 SYSTEM DESCRIPTION

This specification section covers the provisions and installation procedures necessary for a complete and totally functional refrigerant system. The system shall be provided and installed with all necessary System Components, Accessories, Piping Components, and Supplemental Components\Services.

1.3 SUBMITTALS

Government approval is required for submittals with a "GA" designation; submittals having an "FIO" designation are for information only. The following shall be submitted in accordance with Section 01330 SUBMITTAL PROCEDURES:

SD-01 Data

Central Refrigerated Air-Conditioning System; FIO.

Manufacturer's catalog data, at least 3 weeks prior to beginning construction, shall be highlighted to show model #, size, options, performance charts and curves, etc. in adequate detail to demonstrate compliance with contract requirements. Data shall include manufacturer's recommended installation instructions and procedures. Data shall be adequate to demonstrate compliance with contract requirements as specified within the paragraphs:

a. Refrigeration System

b. System Components

c. Accessories

d. Piping Components

Spare Parts; FIO.

Spare parts data for each different item of material and equipment specified, after approval of the detail drawings and not later than 2 months prior to the date of beneficial occupancy. The data shall include a complete list of parts and supplies, with source of supply.

SD-06 Instructions

Posted Instructions; FIO.

Posted instructions, at least 2 weeks prior to construction completion, shall include equipment layout, wiring and control diagrams, piping, valves

and control sequences, and typed condensed operation instructions. The condensed operation instructions shall include preventative maintenance procedures, methods of checking the system for normal and safe operation, and procedures for safely starting and stopping the system. The posted instructions shall be framed under glass or laminated plastic and be posted where indicated by the Contracting Officer.

SD-07 Schedules

Tests; FIO.

Test schedules, at least 2 weeks prior to the start of related testing, for each of the field tests, the system performance tests, and the condenser water quality tests. The schedules shall identify the date, time, and location for each test.

Demonstrations; FIO.

A schedule, at least 2 weeks prior to the date of the proposed training course, which identifies the date, time, and location for the training.

SD-13 Certificates

Central Refrigerated Air-Conditioning System; FIO.

Where the system, components, or equipment are specified to comply with requirements of ARI, ASHRAE, ASME, or UL, proof of such compliance shall be provided. The label or listing of the specified agency shall be acceptable evidence. In lieu of the label or listing, a written certificate from an approved, nationally recognized testing organization equipped to perform such services, stating that the items have been tested and conform to the requirements and testing methods of the specified agency may be submitted. When performance requirements of this project's drawings and specifications vary from standard ARI rating conditions, computer printouts, catalog, or other application data certified by ARI or a nationally recognized laboratory as described above shall be included. If ARI does not have a current certification program that encompasses such application data, the manufacturer may self certify that his application data complies with project performance requirements in accordance with the specified test standards.

SD-19 Operation and Maintenance Manuals

Operation Manual; FIO.

Six complete copies of an operation manual in bound 8/12 by 11 inch booklets listing step-by-step procedures required for system startup, operation, and shutdown. The booklets shall include the manufacturer's name, model number, and parts list. The manuals shall include the manufacturer's name, model number, service manual, and a brief description of all equipment and their basic operating features.

Maintenance Manual; FIO.

Six complete copies of maintenance manual in bound 216 by 279 mm booklets listing routine maintenance procedures, possible breakdowns and repairs, and a trouble shooting guide. The manuals shall include piping and equipment

layouts and simplified wiring and control diagrams of the system as installed.

1.4 SAFETY REQUIREMENTS

Exposed moving parts, parts that produce high operating temperature, parts which may be electrically energized, and parts that may be a hazard to operating personnel shall be insulated, fully enclosed, guarded, or fitted with other types of safety devices. Safety devices shall be installed so that proper operation of equipment is not impaired.

1.5 DELIVERY, STORAGE, AND HANDLING

All equipment delivered and placed in storage shall be stored with protection from the weather, humidity and temperature variations, dirt and dust, or other contaminants.

1.6 PROJECT/SITE CONDITIONS

1.6.1 Verification of Dimensions

The Contractor shall become familiar with all details of the work, verify all dimensions in the field, and shall advise the Contracting Officer of any discrepancy before performing any work.

1.6.2 Drawings

Because of the small scale of the drawings, it is not possible to indicate all offsets, fittings, and accessories that may be required. The Contractor shall carefully investigate the plumbing, fire protection, electrical, structural and finish conditions that would affect the work to be performed and shall arrange such work accordingly, furnishing required offsets, fittings, and accessories to meet such conditions.

2 PRODUCTS

2.1 STANDARD PRODUCTS

Materials and equipment shall be standard products of a manufacturer regularly engaged in the manufacturing of such products, which are of a similar material, design and workmanship. The standard products shall have been in satisfactory commercial or industrial use for two years prior to bid opening. The two-year use shall include applications of equipment and materials under similar circumstances and of similar size. The two years experience shall be satisfactorily completed by a product which has been sold or is offered for sale on the commercial market through advertisements, manufacturer's catalogs, or brochures. Products having less than a two-year field service record shall be acceptable if a certified record of satisfactory field operation, for not less than 6000 hours exclusive of the manufacturer's factory tests, can be shown. All products shall be supported by a service organization. The Contractor shall submit a certified list of qualified permanent service organizations for support of the equipment which includes their addresses and qualifications. These service organizations shall be reasonably convenient to the equipment installation and shall be able to render satisfactory service to the equipment on a regular and emergency basis during the warranty period of the contract.

2.2 NAMEPLATES

Each major component of equipment shall have the manufacturer's name, address, type or style, and catalog or serial number on a plate securely attached to the item of equipment. Nameplates shall be provided for:

a. Liquid-Chilling Package(s)

b. Pump(s)

c. Pump Motor(s)

2.3 ELECTRICAL WORK

Electrical equipment, motors, motor efficiencies, and wiring shall be in accordance with Section 16415 ELECTRICAL WORK, INTERIOR. Electrical motor driven equipment specified shall be provided complete with motors, motor starters, and controls. Electrical characteristics and enclosure type shall be as shown, and unless otherwise indicated, all motors of 1 horsepower and above with open, dripproof, or totally enclosed fan cooled enclosures, shall be high efficiency type. Field wiring shall be in accordance with manufacturer's instructions. Each motor shall conform to NEMA MG 1 and be of sufficient size to drive the equipment at the specified capacity without exceeding the nameplate rating of the motor. All motors shall be continuous duty with the enclosure specified. Motor starters shall be provided complete with thermal overload protection and other appurtenances necessary for the motor control indicated. Motors shall be furnished with a magnetic across-the-line or reduced voltage type starter as required by the manufacturer. Motor starter shall be provided as part of the factory control package. Manual or automatic control and protective or signal devices required for the operation specified and any control wiring required for controls and devices specified, but not shown, shall be provided.

2.4 MATERIALS

2.4.1 Gaskets

Gaskets shall conform to ASTM F 104 - classification for compressed sheet with nitrile binder and acrylic fibers for maximum 700 degrees F service.

2.4.2 Bolts and Nuts

Bolts and nuts, except as required for piping applications, shall be in accordance with ASTM A 307. The bolt head shall be marked to identify the manufacturer and the standard with which the bolt complies in accordance with ASTM A 307.

2.4.3 Escutcheons

Escutcheons shall be chromium-plated iron or chromium-plated brass, either one piece or split pattern, held in place by internal spring tension or set screws.

2.4.4 Pipe Hangers, Inserts, and Supports

Pipe hangers, inserts, and supports shall conform to MSS SP-58 and MSS SP-69.

2.4.5 Gauges

Gauges shall conform to ASME B40.1, Class 1, 2, or 3, Style X, Type I or III as required, 115 mm in diameter with phenolic or metal case.

2.5 REFRIGERATION SYSTEM

2.5.1 Liquid-Chilling Package; Reciprocating or Scroll

Reciprocating or scroll unit shall be designed, fitted, tested, and rated in accordance with ARI 590 and shall meet all the requirements of ASHRAE 15. Entire unit shall be factory assembled, completely piped and wired except for units with remote condensers. Single packaged units shall be charged with refrigerant and oil ready for operation after connection to utilities. The unit shall include the following components as defined in paragraph SYSTEM COMPONENTS:

a. Refrigerant and Oil

b. Reciprocating or Scroll Compressor

c. Compressor Driver, Electric Motor

d. Compressor Driver Connections

e. Liquid Cooler

f. Integral Air-Cooled Condenser

g. Tools

h. All customary auxiliaries deemed necessary by the manufacturer for safe, controlled, automatic operation of the equipment

2.5.1.1 Capacity Criteria

Unit shall have a minimum Coefficient of Performance (COP) of 9.4 at full load rating in accordance with ARI 590. Unit shall have a minimum Integrated Part Load Value (IPLV) of 11.3 in accordance with ARI 590.

2.5.1.2 Controls Package

Each water-chilling unit shall be provided with operating and safety controls of the electronic type. The Contractor shall properly coordinate the chiller control system with the temperature-control system specified in Section 15951 DIRECT DIGITAL CONTROL FOR HVAC. Temperature sensing elements shall be located as recommended by the manufacturer or as shown on the drawings. Capacity reduction may be provided by cylinder unloading, by sequence operation of two or more, but shall not exceed four compressors per circuit, or by a combination of both methods. Each unit shall be provided with a factory-piped and -wired control panel fitted with:

a. A refrigerant discharge pressure and suction pressure gauge

b. A separate high-pressure cut-out with manual reset

c. A low-temperature cutout

d. Compressor operating control

e. Entering and leaving chilled water cutout

f. Operating pilot light

g. Any other relays or appurtenances necessary for safe, controlled chiller operation

h. Manual on-off switch

i. Oil pressure gauge and low oil pressure cutout shall be provided on compressors which utilize positive displacement type oil pumps.

j. System capacity control, pressure or temperature actuated, on systems over 3.5 kW to adjust the unit capacity in accordance with the system load, and to automatically re-cycle the system on power interruption.

k. DDC System Interface: Chiller control panel shall be equipped to provide the following DDC system interface points:
(1) Summary alarm.
(2) Chiller status.
(3) Chilled water leaving temperature reset.
(4) Chiller enable/disable.
Chiller manufacturer shall coordinate points with the DDC system installer.

2.5.1.3 Base

Unit shall be mounted on a structural steel or cast iron base. Compressors shall be mounted on vibration isolators.

2.5.1.4 Refrigerant Circuit

Each circuit shall include combination filter and drier, combination sight glass and moisture indicator, liquid-line solenoid valve, thermostatic expansion valve with external equalizer, and superheat adjustment.

2.6 SYSTEM COMPONENTS

2.6.1 Refrigerant and Oil

Refrigerants shall be one of the fluorocarbon gases. Refrigerants shall have number designations and safety classifications in accordance with ASHRAE 34. Refrigerants shall meet the requirements of ARI 700 as a minimum. Refrigerants shall have an Ozone Depletion Potential (ODP) of less than or equal to 0.05. The unit shall be factory leak tested and dehydrated. Where factory does not precharge the system, Contractor shall provide and install a complete charge of refrigerant and oil required for the installed system as recommended by the manufacturer.

2.6.2 Compressor(s)

2.6.2.1 Reciprocating Compressor(s)

All rotating parts shall be statically and dynamically balanced at the factory to minimize vibration. Compressors shall be capable of operating at partial-load conditions without increased vibration over the normal vibration at full load operation and shall be capable of continuous operation down to the lowest step of unloading as specified. Compressors of size 10 horsepower and above shall have an oil lubrication system of the reversible, forced-feed type with oil strainer. Shaft seal in open-type units shall be mechanical type. Piston speed for open-type compressors shall not exceed the manufacturer's recommendation or 1200 fpm, whichever is less. Compressors shall include:

a. Vertical, V, W, or radial cylinder design

b. Oil lubrication

c. Integrally cast block of close-grained iron or cast aluminum block with hardened steel cylinder sleeves

d. Oil-level bull's eye

e. Cast cylinder heads

f. Cast-aluminum or forged-steel connecting rods

g. Cast iron or forged-steel crankshaft

h. Main bearings of the sleeve-insert type

i. Crankcase oil heaters controlled as recommended by the manufacturer

j. Suction and discharge refrigerant service valves that are flange connected, wrench operated, with cap

k. A strainer on the suction side of the compressor

l. A hot-gas muffler to reduce vibration and noise from pulsations

2.6.2.2 Scroll Compressor(s)

Compressors shall be of the compliant, hermetically sealed design. Compressors shall be mounted on vibration isolators to minimize vibration and noise. Rotating parts shall be statically and dynamically balanced at the factory to eliminate vibration. Lubrication system shall be centrifugal pump type equipped with an oil level bull's eye sight glass and an oil charging valve. Crankcase oil heater shall be provided if standard or if available as an option. If provided, the crankcase oil heater shall be controlled as recommended by the manufacturer.

2.6.3 Compressor Driver, Electric Motor

Motor starter shall be unit mounted. The compressor(s) shall be driven by an electric motor that has a maximum speed of 3,600 rpm. Motor shall be of the constant-speed, squirrel-cage induction, open enclosure, or hermetically

sealed, normal- or high-torque type as required by the compressor manufacturer to adequately bring the compressor up to full operating speed without damaging the equipment. Motor starter shall be provided with NEMA 3R enclosures with an integral circuit breaker which trips the breaker when the starter door is opened. Hermetically sealed motors shall be refrigerant-gas cooled. Wiring shall be as recommended by the compressor manufacturer to provide completely automatic operation of the system. Motors shall be protected against running overload and motor-winding temperature overloads. All compressors shall be protected from rapid on-off cycling by a 20-minute time-delay switch initiated by unit shutdown with an adjustable time delay. Motor controller shall be suitable for starting compressor motor intermittently at 20 minute intervals continuously without damage to controller.

2.6.4 Compressor Driver Connections

Each machine driven through speed-increasing gears shall be so designed as to assure self-alignment, interchangeable parts, proper lubrication, and minimum of unbalanced forces. Bearings shall be of the sleeve or roller type. Pressure lubrication with pump and cooler shall be provided. Gear cases shall be oil tight. Shaft extensions shall be provided with seals to retain oil and exclude all dust.

2.6.5 Liquid Cooler

Liquid coolers shall be designed, fitted, and rated in accordance with ARI 590 for reciprocating and scroll compressors. Coolers shall be designed, constructed, tested, and certified in accordance with ASME BPV VIII Div 1 as applicable, and shall comply with the provisions of ASHRAE 15. Liquid coolers shall be designed for waterside working pressures not less than 150 psig. On direct-expansion-type units, refrigerant circuit shall be complete with liquid solenoid valve and expansion device capable of modulating to the minimum step of capacity unloading. Liquid coolers shall be of the removable or fixed-tube bundle type except that units less than 20 tons may be coaxial-tube type. Tubes shall be seamless copper, plain, integrally finned with smooth bore or integrally finned with enhanced bore. Nominal tube thickness shall be no less than 0.028 inches. Each tube shall be individually replaceable, excluding the coaxial-tube type. Tubes shall be installed into carbon mild steel tube sheets by rolling. Tube baffles shall be carbon mild steel properly spaced to provide adequate tube support, and cross flow liquid cooler feed control shall be complete and designed to feed the cooler at all levels of capacity from 100 percent down to minimum required operating level. Performance shall be based on a water velocity not less than 3 fps nor more than 12 fps and fouling factor of 0.00025 sq. ft.-hour-degree F btu.

2.6.6 Air-Cooled Condenser Section

2.6.6.1 Sizing

Sizing of the condenser for full capacity at design conditions shall be based on the temperature difference between the entering outside air and the condensing refrigerant for systems with stand-alone condensers that are not part of a manufacturer matched combination and cataloged system. Sizing of all other condensers for full capacity at design conditions shall be based on a maximum of 30 degrees F temperature difference between the entering outside air and condensing refrigerant.

2.6.6.2 Construction

Air-Cooled condenser shall be designed, fitted, tested, and rated in accordance with ARI 210/240, ARI 365, ARI 460, or ARI 590 as applicable and shall meet the requirements of ASHRAE 15. Condenser shall be an integral part of the liquid-chilling package unit. Air-cooled condenser shall be a complete factory-fabricated and assembled unit, consisting of coils, fans, and electric-motor drive. Unless the condenser coil is completely protected through inherent design, screens shall be provided by the manufacturer to prevent physical damage to the coil.

2.6.6.3 Operation

Saturated refrigerant condensing temperature shall not be over 55 degrees C unless the system can meet the unit efficiency specified on the drawings at the provided condensing temperature, in which case the manufacturer shall certify that the condenser and associated equipment are designed for the submitted condensing temperature. The saturated condensing temperature shall not exceed 145 degrees F in either case. Entering dry bulb outside design air temperature shall be as indicated. For those periods when the refrigeration system will operate over design conditions, the equipment shall be capable of operating continuously at 10 degrees F above stated outside design air temperature without damage or shutdown of the compressor motor or shutdown of the refrigeration system by safety devices.

2.6.6.4 Condenser Coil

Condenser coil shall be of the extended-surface fin-and-tube type and shall be constructed of seamless copper tubes with compatible copper fins. Fins shall be soldered or mechanically bonded to the tubes and installed in a metal casing. Coil shall be tested after assembly at pressure specified in ASHRAE 15 for the refrigerant employed in the system.

2.6.6.5 Fans

Fans shall be centrifugal or propeller type as best suited for the application. Fans shall be direct or V-belt driven. Belt drives shall be completely enclosed within the unit casing or equipped with a guard. When belt drive is provided, an adjustable sheave to furnish not less than 20 percent fan-speed adjustment shall be provided. Sheaves shall be selected to provide the capacity indicated at the approximate midpoint of the adjustment. Fans shall be statically and dynamically balanced.

2.6.6.6 Condenser Casing

Condenser casing shall be hot-dip galvanized steel not lighter than 18 gauge. Condensers having horizontal air discharge shall be provided with discharge baffle to direct air upward, constructed of the same material and thickness as the casing.

2.6.6.7 Refrigerant Storage

Air-cooled condenser may be used for refrigerant storage in lieu of a separate receiver, if the condenser storage capacity is 5 percent in excess of the fully charged system for packaged air-cooled chillers.

2.6.6.8 Condenser Controls

If the equipment or system served by the condenser requires control of head pressure either air volume head pressure control or condenser flooding head pressure control shall be provided which meets the following requirements:

a. Air Volume Control: On a decrease in refrigerant discharge pressure, volume-control dampers shall modulate to control the airflow over the condenser coil. Solid-state variable-speed fan motor controller may be provided in lieu of volume dampers to control the air flow over the coil. Condensers with multiple fans may be provided with fan cycling control to cycle fans in response to outdoor ambient temperature. Control shall be set for minimum of 95 degrees F saturated refrigerant condensing temperature.

b. Condenser Flooding: On a decrease in refrigerant discharge pressure, a head pressure sensitive valve shall throttle condenser outflow to increase the amount of liquid in the condenser. A differential pressure hot-gas bypass valve shall be provided to maintain receiver pressure which opens as the receiver pressure falls. Control shall be set for minimum of 95 degrees F saturated refrigerant condensing temperature.

2.6.7 Tools

One complete set of special tools as recommended by the manufacturer for field maintenance of the system shall be provided. Tools shall be mounted on a tool board in the equipment room or contained in a toolbox as directed by the Contracting Officer.

2.7 ACCESSORIES

2.7.1 Pumps

Pumps shall be in accordance with Section 15556 HOT WATER HEATING AND CHILLED WATER SYSTEMS.

2.7.2 Expansion Tanks

Expansion tanks shall be in accordance with Section 15556 HOT WATER HEATING AND CHILLED WATER SYSTEMS.

2.7.3 Insulation

2.7.3.1 Field Installed Insulation

Field installed insulation shall be as specified in Section 15250 THERMAL INSULATION FOR MECHANICAL SYSTEM, except for header and waterbox insulation which shall be flexible cellular insulation in accordance with ASTM C 534, Type I.

2.7.3.2 Factory Installed Insulation

For Liquid-Chilling Packages (Reciprocating or Scroll), insulation shall be provided on all suction piping from the evaporator to the compressor and on the liquid cooler including chilled water boxes or headers.

2.8 WATER TREATMENT SYSTEMS

2.8.1 Chilled and Condenser Water

Water to be used in the chilled and condenser water systems shall be treated to maintain the conditions recommended by this specification as well as the recommendations from the manufacturers of the condenser and evaporator coils. Chemicals shall meet all required federal, state, and local environmental regulations for the treatment of evaporator coils and direct discharge to the sanitary sewer.

2.8.2 Glycol Solution

A 30 percent concentration by volume of industrial grade propylene glycol shall be provided for the system. The glycol shall be tested in accordance with ASTM D 1384 with less than 0.5 mils penetration per year for all system metals. The glycol shall contain corrosion inhibitors. Silicate based inhibitors shall not be used. The solution shall be compatible with pump seals, other elements of the system, and water treatment chemicals used within the system.

2.8.3 Chilled Water System

A pot feeder shall be provided on the chilled water piping as indicated. Size and capacity of feeder shall be based on local requirements and water analysis. The feeder shall be furnished with an air vent, gauge glass, funnel, valves, fittings, and piping.

2.9 PIPING COMPONENTS

2.9.1 Chilled Water Supply and Return Piping and Fittings

Chilled water supply and return piping and fittings shall be in accordance with Section 15556 HOT WATER HEATING AND CHILLED WATER SYSTEMS.

2.10 FABRICATION

2.10.1 Factory Coating

Unless otherwise specified, equipment and component items, when fabricated from ferrous metal, shall be factory finished with the manufacturer's standard finish, except that items located outside of buildings shall have weather resistant finishes that will withstand 500 hours exposure to the salt spray test specified in ASTM B 117 using a 5 percent sodium chloride solution. Immediately after completion of the test, the specimen shall show no signs of blistering, wrinkling, cracking, or loss of adhesion and no sign of rust creepage beyond 3 mm on either side of the scratch mark. Cut edges of galvanized surfaces where hot-dip galvanized sheet steel is used shall be coated with a zinc-rich coating conforming to ASTM D 520, Type I.

2.10.2 Field Painting

Painting required for surfaces not otherwise specified, and finish painting of items only primed at the factory are specified in Section 09900 PAINTING, GENERAL.

2.10.2.1 Color Coding

Color coding for piping identification is specified in Section 09900 PAINTING, GENERAL.

2.10.2.2 Color Coding Scheme

A color coding scheme for locating hidden piping shall be in accordance with Section 15400 PLUMBING, GENERAL PURPOSE.

2.11 SUPPLEMENTAL COMPONENTS\SERVICES

2.11.1 Drain and Makeup Water Piping

Piping shall comply with the requirements of Section 15400 PLUMBING, GENERAL PURPOSE. Drains which connect to sanitary sewer system shall be connected by means of an indirect waste.

3 EXECUTION

3.1 INSTALLATION

All work shall be performed in accordance with the manufacturer's published diagrams, recommendations, and equipment warranty requirements. Where equipment is specified to conform to the requirements of ASME BPV VIII Div 1and ASME BPV IX, the design, fabrication, and installation of the system shall conform to ASME BPV VIII Div 1 and ASME BPV IX.

3.1.1 Refrigeration System

3.1.1.1 Equipment

Necessary supports shall be provided for all equipment, appurtenances, and pipe as required, including frames or supports for compressors, pumps, liquid coolers, and similar items. Other floor-mounted equipment shall be set on not less than a 6 inch concrete pad doweled in place. Concrete foundations for floor mounted pumps shall have a mass equivalent to three times the weight of the components, pump, base plate, and motor to be supported. In lieu of concrete pad foundation, concrete pedestal block with isolators placed between the pedestal block and the floor may be provided. Concrete pedestal block shall be of mass not less than three times the combined pump, motor, and base weights. Lines connected to pumps mounted on pedestal blocks shall be provided with flexible connectors.

3.1.2 General Piping Installation

General piping installation shall be in accordance with Section 15556 HOT WATER HEATING AND CHILLED WATER SYSTEMS.

3.1.3 Factory Applied Insulation

3.1.3.1 Refrigerant Suction Lines

Refrigerant suction lines between the cooler and each compressor and cold gas inlet connections to gas cooled motors shall be insulated with not less than 3/4 inch thick unicellular plastic foam.

3.1.3.2 Liquid Coolers

Liquid coolers (including chilled water headers or boxes), which may have factory or field applied insulation, shall be insulated with unicellular plastic foam. Insulation shall be not less than 3/4 inch thick or have a maximum thermal conductivity of 0.28 Btu/((hr.)(sq. ft.)(degree F.)). In lieu of the above insulation, a 2 inch thickness of urethane foam may be used. Urethane foam shall be completely covered and sealed with a sheet metal jacket not lighter than 20 gauge. Insulation on heads of coolers shall be constructed to provide easy removal and replacement of heads without damage to the insulation.

3.2 MANUFACTURER'S FIELD SERVICE

The services of a factory-trained representative shall be provided for 2 days. The representative shall advise on the following:

a. Semi-Hermetic Machines:

(1) Testing semi-hermetic water-chilling unit under pressure for refrigerant leaks; evacuation and dehydration of machine to an absolute pressure of not over 300 microns.

(2) Charging the machine with refrigerant.

(3) Starting the machine.

3.3 DEMONSTRATIONS

Contractor shall conduct a training course for the operating staff as designated by the Contracting Officer. The training period shall consist of a total 8 hours of normal working time and start after the system is functionally completed but prior to final acceptance tests. The field instructions shall cover all of the items contained in the Operation and Maintenance Manuals as well as demonstrations of routine maintenance operations.

END OF SECTION

SECTION 15895

AIR SUPPLY, DISTRIBUTION, VENTILATION, AND EXHAUST SYSTEM

1 GENERAL

1.1 REFERENCES

The publications listed below form a part of this specification to the extent referenced. The publications are referred to in the text by basic designation only.

AIR CONDITIONING AND REFRIGERATION INSTITUTE (ARI)

ARI 350	(1986) Sound Rating of Non-Ducted Indoor Air-Conditioning Equipment
ARI 410	(1991) Forced-Circulation Air-Cooling and Air-Heating Coils
ARI 430	(1989) Central-Station Air-Handling Units
ARI 440	(1989) Room Fan-Coil Air-Conditioners
ARI 445	(1987) Room Air-Induction Units
ARI 880	(1990) Air Terminals
ARI Guideline D	(1987) Application and Installation of Central Station Air-Handling Units

AIR CONDITIONING CONTRACTORS OF AMERICA (ACCA)

ACCA Manual 4	(1990) Installation Techniques for Perimeter Heating & Cooling

AIR MOVEMENT AND CONTROL ASSOCIATION (AMCA)

AMCA 210	(1985) Laboratory Methods of Testing Fans for Rating
AMCA 300	(1994) Reverberant Room Method for Sound Testing of Fans

AMERICAN BEARING MANUFACTURERS ASSOCIATION (ABEMA)

ABEMA 9	(1990) Load Ratings and Fatigue Life for Ball Bearings
ABEMA 11	(1990) Load Ratings and Fatigue Life for Roller Bearings

AMERICAN NATIONAL STANDARDS INSTITUTE (ANSI)

ANSI S12.32	(1990) Precision Methods for the Determination of Sound Power Levels of Discrete Frequency and Narrow-Band Noise Sources in Reverberation Rooms

AMERICAN SOCIETY FOR TESTING AND MATERIALS (ASTM)

ASTM A 47	(1990) Ferritic Malleable Iron Castings
ASTM A 53	(1993a) Pipe, Steel, Black and Hot-Dipped, Zinc-Coated Welded and Seamless
ASTM A 106	(1994) Seamless Carbon Steel Pipe for High-Temperature Service
ASTM A 123	(1989a) Zinc (Hot-Dip Galvanized) Coatings on Iron and Steel Products
ASTM A 167	(1993) Stainless and Heat-Resisting Chromium-Nickel Steel Plate, Sheet, and Strip
ASTM A 181	(1994) Forgings, Carbon Steel, for General-Purpose Piping
ASTM A 183	(1983; R 1990) Carbon Steel Track Bolts and Nuts
ASTM A 193	(1996) Alloy-Steel and Stainless Steel Bolting Materials for High-Temperature Service
ASTM A 234	(1996) Piping Fittings of Wrought Carbon Steel and Alloy Steel for Moderate and Elevated Temperatures
ASTM A 536	(1984; R 1993) Ductile Iron Castings
ASTM A 733	(1993) Welded and Seamless Carbon Steel and Austenitic Stainless Steel Pipe Nipples
ASTM A 924	(1994) General Requirements for Steel Sheet, Metallic-Coated by the Hot-Dip Process
ASTM B 62	(1993) Composition Bronze or Ounce Metal Castings
ASTM B 75	(1993) Seamless Copper Tube
ASTM B 88	(1993a) Seamless Copper Water Tube
ASTM B 117	(1994) Operating Salt Spray (Fog) Testing Apparatus
ASTM B 650	(1993) Electrodeposited Engineering Chromium Coatings of Ferrous Substrates

ASTM C 916	(1985; Rev 1990) Adhesives for Duct Thermal Insulation
ASTM C 1071	(1991) Thermal and Acoustical Insulation (Glass Fiber, Duct Lining Material)
ASTM D 520	(1984; R 1989) Zinc Dust Pigment
ASTM D 1384	(1993) Corrosion Test for Engine Coolants in Glassware
ASTM D 1654	(1992) Evaluation of Painted or Coated Specimens Subjected to Corrosive Environments
ASTM D 1785	(1993) Poly(Vinyl Chloride) (PVC) Plastic Pipe, Schedules 40, 80, and 120
ASTM D 2000	(1990; R 1994) Rubber Products in Automotive Applications
ASTM D 2466	(1993) Poly(Vinyl Chloride) (PVC) Plastic Pipe Fittings, Schedule 40
ASTM D 2564	(1993) Solvent Cements for Poly(Vinyl Chloride) (PVC) Plastic Piping Systems
ASTM D 2855	(1993) Making Solvent-Cemented Joints with Poly(Vinyl Chloride) (PVC) Pipe and Fittings
ASTM D 3359	(1995) Measuring Adhesion by Tape Test
ASTM E 84	(1994) Surface Burning Characteristics of Building Materials
ASTM E 437	(1992) Industrial Wire Cloth and Screens (Square Opening Series)
ASTM F 872	(1984; R 1990) Filter Units, Air-Conditioning: Viscous-Impingement Type, Cleanable
ASTM F 1199	(1988; R 1993) Cast (All Temperature and Pressures) and Welded Pipe Line Strainers (150 psig and 150 degrees F Maximum)
ASTM F 1200	(1988; R 1993) Fabricated (Welded) Pipe Line Strainers (Above 150 psig and 150 degrees F)

AMERICAN SOCIETY OF HEATING, REFRIGERATING AND AIR-CONDITIONING ENGINEERS (ASHRAE)

ASHRAE 15	(1994) Safety Code for Mechanical Refrigeration

ASHRAE 52.1	(1992) Gravimetric and Dust-Spot Procedures for Testing Air-Cleaning Devices Used in General Ventilation for Removing Particulate Matter
ASHRAE 68	(1986) Laboratory Method of Testing In-Duct Sound Power Measurement Procedures for Fans
ASHRAE 70	(1991) Method of Testing Rating the Performance of Air Outlets and Inlets
ASHRAE 84	(1991) Method of Testing Air-to-Air Heat Exchangers

AMERICAN SOCIETY OF MECHANICAL ENGINEERS (ASME)

ASME B1.20.1	(1983; R 1992) Pipe Threads, General Purpose (Inch)
ASME B16.3	(1992) Malleable Iron Threaded Fittings
ASME B16.5	(1988; Errata Oct 88; B16.5a) Pipe Flanges and Flanged Fittings
ASME B16.9	(1993) Factory-Made Wrought Steel Buttwelding Fittings
ASME B16.11	(1991) Forged Fittings, Socket-Welding and Threaded
ASME B16.18	(1984; R 1994) Cast Copper Alloy Solder Joint Pressure Fittings
ASME B16.21	(1992) Nonmetallic Flat Gaskets for Pipe Flanges
ASME B16.22	(1989) Wrought Copper and Copper Alloy Solder Joint Pressure Fittings
ASME B16.26	(1988) Cast Copper Alloy Fittings for Flared Copper Tubes
ASME B16.39	(1986; R 1994) Malleable Iron Threaded Pipe Unions Classes 150, 250, and 300
ASME B31.1	(1995) Power Piping
ASME B40.1	(1991) Gauges - Pressure Indicating Dial Type - Elastic Element
ASME BPV IX	(1995; Addenda Dec 1995) Boiler and Pressure Vessel Code; Section IX, Welding and Brazing Qualifications

AMERICAN WATER WORKS ASSOCIATION (AWWA)

AWWA C606	(1987) Grooved and Shouldered Joints

AMERICAN WELDING SOCIETY (AWS)

AWS D1.1	(1994) Structural Welding Code - Steel

COMMERCIAL ITEM DESCRIPTIONS (CID)

CID A-A-1419	(Rev D) Filter Element, Air Conditioning (Viscous-Impingement and Dry Types, Replaceable)

EXPANSION JOINT MANUFACTURERS ASSOCIATION (EJMA)

EJMA-01	(1993) EJMA Standards

INSTITUTE OF ENVIRONMENTAL SCIENCES (IES)

IES RP-CC-001.3	(1993) HEPA and ULPA Filters

MANUFACTURERS STANDARDIZATION SOCIETY OF THE VALVE AND FITTINGS INDUSTRY (MSS)

MSS SP-25	(1993) Standard Marking System for Valves, Fittings, Flanges and Unions
MSS SP-58	(1993) Pipe Hangers and Supports - Materials, Design and Manufacture
MSS SP-69	(1991) Pipe Hangers and Supports - Selection and Application
MSS SP-70	(1990) Cast Iron Gate Valves, Flanged and Threaded Ends
MSS SP-71	(1990) Cast Iron Swing Check Valves, Flanged and Threaded Ends
MSS SP-72	(1992) Ball Valves with Flanged or Butt-Welding Ends for General Service
MSS SP-80	(1987) Bronze Gate, Globe, Angle and Check Valves
MSS SP-85	(1994) Cast Iron Globe & Angle Valves, Flanged and Threaded Ends
MSS SP-110	(1992) Ball Valves Threaded, Socket-Welding, Solder Joint, Grooved and Flared Ends

NATIONAL ELECTRICAL MANUFACTURERS ASSOCIATION (NEMA)

NEMA MG 1	(1993; Rev 1-1993; Rev 2-1995) Motors and Generators

NATIONAL FIRE PROTECTION ASSOCIATION (NFPA)

NFPA 70	(1993) National Electrical Code

NFPA 90A	(1993) Installation of Air Conditioning and Ventilating Systems
NFPA 96	(1994) Installation of Equipment for the Removal of Smoke and Grease-Laden Vapors from Commercial Cooking Equipment

NORTH AMERICAN INSULATION MANUFACTURERS ASSOCIATION (NAIMA)

NAIMA-AH116	(1993) Fibrous Glass Duct Construction Standards

SHEET METAL AND AIR CONDITIONING CONTRACTORS' NATIONAL ASSOCIATION (SMACNA)

SMACNA-01	(1975) Accepted Industry Practice for Industrial Duct Construction
SMACNA-05	(1992) Fire, Smoke and Radiation Damper Installation Guide for HVAC Systems
SMACNA-06	(1985) HVAC Duct Construction Standards - Metal and Flexible
SMACNA-10	(1985) HVAC Air Duct Leakage Test Manual

UNDERWRITERS LABORATORIES (UL)

UL-01	(1995; Supple) Building Materials Directory
UL-03	(1995) Electrical Construction Materials Directory
UL-05	(1995; Supple) Fire Resistance Directory
UL 94	(1991; Rev thru Apr 1995) Tests for Flammability of Plastic Materials for Parts in Devices and Appliances
UL 181	(1994; Rev Sep 95) Factory-Made Air Ducts and Air Connectors
UL 214	(1993) Tests for Flame-Propagation of Fabrics and Films
UL 555	(1995) Fire Dampers
UL 586	(1990; Rev Apr 1995) High-Efficiency, Particulate, Air Filter Units
UL 705	(1994; Rev thru Apr 1995) Power Ventilators
UL 723	(1993; Rev Apr 1994) Test for Surface Burning Characteristics of Building Materials
UL 900	(1994) Test Performance of Air Filter Units

UL 1995 (1990) Heating and Cooling Equipment

1.2 COORDINATION OF TRADES

Ductwork, piping offsets, fittings, and accessories shall be furnished as required to provide a complete installation and to eliminate interference with other construction.

1.3 DELIVERY AND STORAGE

Equipment delivered and placed in storage shall be stored with protection from the weather, humidity and temperature variations, dirt and dust, or other contaminants.

1.4 SUBMITTALS

Government approval is required for submittals with a "GA" designation; submittals having an "FIO" designation are for information only. The following shall be submitted in accordance with Section 01330 SUBMITTAL PROCEDURES:

SD-01 Data

Components and Equipment Data; FIO.

Manufacturer's catalog data shall be included with the detail drawings for the following items. The data shall be highlighted to show model, size, options, etc., that are intended for consideration. Data shall be adequate to demonstrate compliance with contract requirements for the following:

a. Ductwork Components

b. Air Systems Equipment

c. Air Handling Units

d. Terminal Units

e. Motors

SD-04 Drawings

Air Supply, Distribution, Ventilation, and Exhaust Equipment; FIO.

Drawings shall consist of equipment layout including assembly and installation details and electrical connection diagrams; ductwork layout showing the location of all supports and hangers, typical hanger details, gauge reinforcement, reinforcement spacing rigidity classification, and static pressure and seal classifications; and piping layout showing the location of all guides and anchors, the load imposed on each support or anchor, and typical support details. Drawings shall include any information required to demonstrate that the system has been coordinated and will properly function as a unit and shall show equipment relationship to other parts of the work, including clearances required for operation and maintenance.

SD-06 Instructions

Test Procedures; FIO.

Proposed test procedures for piping hydrostatic test, ductwork leak test, and performance tests of systems, at least 2 weeks prior to the start of related testing.

System Diagrams; FIO.

Proposed diagrams, at least 2 weeks prior to start of related testing. System diagrams that show the layout of equipment, piping, and ductwork, and typed condensed operation manuals explaining preventative maintenance procedures, methods of checking the system for normal, safe operation, and procedures for safely starting and stopping the system shall be framed under glass or laminated plastic. After approval, these items shall be posted where directed.

SD-07 Schedules

Test Schedules; FIO.

Proposed test schedules for hydrostatic test of piping, ductwork leak test, and performance tests, at least 2 weeks prior to the start of related testing.

Field Training Schedule; FIO.

Proposed schedule for field training, at least 2 weeks prior to the start of related training.

SD-08 Statements

Similar Services; FIO.

Statement demonstrating successful completion of similar services on at least 5 projects of similar size and scope, at least 2 weeks prior to submittal of other items required by this section.

SD-09 Reports

Test Reports; FIO.

Test reports for ductwork leak test, and performance tests in booklet form, upon completion of testing. Reports shall document phases of tests performed including initial test summary, repairs/adjustments made, and final test results.

SD-19 Operation and Maintenance Manuals

Air Supply, Distribution, Ventilation, and Exhaust Manuals; FIO.

Six manuals listing step-by-step procedures required for system startup, operation, shutdown, and routine maintenance, at least 2 weeks prior to field training. The manuals shall include the manufacturer's name, model number, parts list, list of parts and tools that should be kept in stock by the owner for routine maintenance including the name of a local supplier,

simplified wiring and controls diagrams, troubleshooting guide, and recommended service organization (including address and telephone number) for each item of equipment. Each service organization submitted shall be capable of providing 4 hour onsite response to a service call on an emergency basis.

2 PRODUCTS

2.1 STANDARD PRODUCTS

Components and equipment shall be standard products of a manufacturer regularly engaged in the manufacturing of products that are of a similar material, design and workmanship. The standard products shall have been in satisfactory commercial or industrial use for 2 years before bid opening. The 2-year experience shall include applications of components and equipment under similar circumstances and of similar size. The 2 years must be satisfactorily completed by a product which has been sold or is offered for sale on the commercial market through advertisements, manufacturers' catalogs, or brochures. Products having less than a 2-year field service record will be acceptable if a certified record of satisfactory field operation, for not less than 6000 hours exclusive of the manufacturer's factory tests, can be shown. The equipment items shall be supported by a service organization.

2.2 ASBESTOS PROHIBITION

Asbestos and asbestos-containing products shall not be used.

2.3 NAMEPLATES

Equipment shall have a nameplate that identifies the manufacturer's name, address, type or style, model or serial number, and catalog number.

2.4 EQUIPMENT GUARDS AND ACCESS

Belts, pulleys, chains, gears, couplings, projecting setscrews, keys, and other rotating parts exposed to personnel contact shall be fully enclosed or guarded according to OSHA requirements. High temperature equipment and piping exposed to contact by personnel or where it creates a potential fire hazard shall be properly guarded or covered with insulation of a type specified.

2.5 ELECTRICAL WORK

Electrical motor-driven equipment specified shall be provided complete with motor, motor starter, and controls. Unless otherwise specified, electric equipment, including wiring and motor efficiencies, shall be according to Section 16415 ELECTRICAL WORK, INTERIOR. Electrical characteristics and enclosure type shall be as shown. Unless otherwise indicated, motors of 1 hp and above shall be high efficiency type. Motor starters shall be provided complete with thermal overload protection and other appurtenances necessary. Each motor shall be according to NEMA MG 1 and shall be of sufficient size to drive the equipment at the specified capacity without exceeding the nameplate rating of the motor. Manual or automatic control and protective or signal devices required for the operation specified, and any control wiring required for controls and devices, but not shown, shall be provided. Where two-speed or variable-speed motors are indicated, solid-

state variable-speed controller may be provided to accomplish the same function. Solid-state variable-speed controllers shall be utilized for motors rated 10 hp or less. Adjustable frequency drives shall be used for larger motors.

2.6 CONTROLS

Controls shall be provided as specified in Section 15951 DIRECT DIGITAL CONTROL FOR HVAC.

2.7 DUCTWORK COMPONENTS

2.7.1 Ductwork

All aspects of metal ductwork construction, including all fittings and components, shall comply with SMACNA-06 unless otherwise specified. All components shall be constructed of galvanized sheet metal unless otherwise noted. Ductwork pressure and seal classes shall be as indicated. Elbows shall be radius type with a centerline radius of 1-1/2 times the width or diameter of the duct where space permits. Otherwise, elbows having a minimum radius equal to the width or diameter of the duct or square elbows with factory fabricated turning vanes may be used. Sealants shall conform to fire hazard classification specified in Section 15250 THERMAL INSULATION FOR MECHANICAL SYSTEMS. Pressure sensitive tape shall not be used as a sealant. Spiral lock seam duct, and flat oval shall be made with duct sealant and locked with not less than 3 equally spaced drive screws or other approved methods indicated in SMACNA-06. The sealant shall be applied to the exposed male part of the fitting collar so that the sealer will be on the inside of the joint and fully protected by the metal of the duct fitting. One brush coat of the sealant shall be applied over the outside of the joint to at least 2 inch band width covering all screw heads and joint gap. Dents in the male portion of the slip fitting collar will not be acceptable.

2.7.1.1 Transitions

Diverging air flow transitions shall be made with each side pitched out a maximum of 15 degrees, for an included angle of 30 degrees. Transitions for converging air flow shall be made with each side pitched in a maximum of 30 degrees, for an included angle of 60 degrees, or shall be as indicated. Factory-fabricated reducing fittings for systems using round duct sections when formed to the shape of the ASME short flow nozzle, need not comply with the maximum angles specified.

2.7.1.2 Insulated Nonmetallic Flexible Duct Runouts

Flexible duct runouts shall be used only where indicated. Runout length shall be as shown on the drawings, but shall in no case exceed 6 feet. Runouts shall be preinsulated, factory fabricated, and shall comply with NFPA 90A and UL 181. Either field or factory applied vapor barrier shall be provided. Where coil induction or high velocity units are supplied with vertical air inlets, a streamlined and vaned and mitered elbow transition piece shall be provided for connection to the flexible duct or hose. The last elbow to these units, other than the vertical air inlet type, shall be a die-stamped elbow and not a flexible connector. Insulated flexible connectors may be used as runouts. The insulated material and vapor barrier shall conform to the requirements of Section 15250 THERMAL INSULATION FOR

MECHANICAL SYSTEMS. The insulation material surface shall not be exposed to the air stream.

2.7.1.3 General Service Duct Connectors

A flexible duct connector approximately 6 inches in width shall be provided where sheet metal connections are made to fans or where ducts of dissimilar metals are connected. For round/oval ducts, the flexible material shall be secured by stainless steel or zinc-coated, iron clinch-type draw bands. For rectangular ducts, the flexible material locked to metal collars shall be installed using normal duct construction methods. The composite connector system shall comply with UL 214 and be classified as "flame-retarded fabrics" in UL-01.

2.7.2 Ductwork Accessories

2.7.2.1 Duct Access Doors

Access doors shall be provided in ductwork and plenums where indicated and at all air flow measuring primaries, automatic dampers, fire dampers, coils, thermostats, and other apparatus requiring service and inspection in the duct system, and unless otherwise shown, shall conform to SMACNA-06. Access doors shall be provided upstream and downstream of air flow measuring primaries and heating and cooling coils. Doors shall be minimum 15 x 18 inches, unless otherwise shown. Where duct size will not accommodate this size door, the doors shall be made as large as practicable. Doors 24 x 24 inches or larger shall be provided with fasteners operable from both sides. Doors in insulated ducts shall be the insulated type.

2.7.2.2 Fire Dampers

Fire dampers shall be 1-1/2 hour fire rated unless otherwise indicated. Fire dampers shall conform to the requirements of NFPA 90A and UL 555. Fire dampers shall be automatic operating type and shall have a dynamic rating suitable for the maximum air velocity and pressure differential to which it will be subjected. Fire dampers shall be approved for the specific application, and shall be installed according to their listing. Fire dampers shall be equipped with a steel sleeve or adequately sized frame installed in such a manner that disruption of the attached ductwork, if any, will not impair the operation of the damper. Sleeves or frames shall be equipped with perimeter mounting angles attached on both sides of the wall or floor opening. Fire dampers shall be curtain type with damper blades out of the air stream. Dampers shall not reduce the duct or the air transfer opening cross-sectional area. Dampers shall be installed so that the centerline of the damper depth or thickness is located in the centerline of the wall, partition or floor slab depth or thickness. Unless otherwise indicated, the installation details given in SMACNA-05 and in manufacturer's instructions for fire dampers shall be followed.

2.7.2.3 Manual Balancing Dampers

Manual balancing dampers shall be furnished with accessible operating mechanisms. Where operators occur in finished portions of the building, operators shall be chromium plated with all exposed edges rounded. Manual volume control dampers shall be operated by locking-type quadrant operators. Dampers shall be 2 gauges heavier than the duct in which installed. Unless otherwise indicated, multileaf dampers shall be opposed blade type with

maximum blade width of 12 inches. Access doors or panels shall be provided for all concealed damper operators and locking setscrews. Unless otherwise indicated, the locking-type quadrant operators for dampers, when installed on ducts to be thermally insulated, shall be provided with stand-off mounting brackets, bases, or adapters to provide clearance between the duct surface and the operator not less than the thickness of the insulation. Stand-off mounting items shall be integral with the operator or standard accessory of the damper manufacturer. Volume dampers shall be provided where indicated.

2.7.2.4 Branch Connections

All branch connections shall be constructed to SMACMA Standards. Use the following connections unless otherwise indicated:

a. Medium Pressure Duct: Factory fabricated 45 degree tapered low loss boot tee.

b. Low Pressure Duct:

(1) Rectangular duct with round branch, use factory fabricated conical spin-in fitting complete with balancing damper, quadrant operator, and insulation guard.

(2) Rectangular duct with rectangular branch, use tapered 45 degree entry.

2.7.2.5 Turning Vanes

Airfoil design, smoothly-rounded entry nose, extending trailing edge, continuous internal tubes for stiffening and rigidity of the section, adaptable to all duct sizes, maximum generated sound power level 54 decibels in Octave Band Four at 2,000 feet per minute velocity in 24 x 24 duct size. Side rails by same manufacturer as turning vanes, vanes installed on 2.4 inch centers across the full diagonal dimension of the elbow. In unequal elbows, adjust to set all the vanes in the assembly at the correct angle of attack, resulting in the leading and trailing edges in a parallel relationship.

2.7.3 Duct Sleeves, Framed Prepared Openings, Closure Collars

2.7.3.1 Duct Sleeves

Duct sleeves shall be provided for round ducts 15 inches in diameter or less passing through floors, walls, ceilings, or roof, and installed during construction of the floor, wall, ceiling, or roof. Round ducts larger than 15 inches in diameter and square, rectangular, and oval ducts passing through floors, walls, ceilings, or roof shall be installed through framed prepared openings. The Contractor shall be responsible for the proper size and location of sleeves and prepared openings. Sleeves and framed openings are also required where grilles, registers, and diffusers are installed at the openings. Framed prepared openings shall be fabricated from 20 gauge galvanized steel, unless otherwise indicated. Where sleeves are installed in bearing walls or partitions, black steel pipe, ASTM A 53, Schedule 20 shall be used. Sleeve shall provide 1 inch clearance between the duct and the sleeve or 1 inch clearance between the insulation and the sleeve for insulated ducts.

2.7.3.2 Framed Prepared Openings

Openings shall have 1 inch clearance between the duct and the opening or 1 inch clearance between the insulation and the opening for insulated ducts.

2.7.3.3 Closure Collars

Collars shall be fabricated of galvanized sheet metal not less than 4 inches wide, unless otherwise indicated, and shall be installed on exposed ducts on each side of walls or floors where sleeves or prepared openings are provided. Collars shall be installed tight against surfaces. Collars shall fit snugly around the duct or insulation. Sharp edges of the collar around insulated duct shall be ground smooth to preclude tearing or puncturing the insulation covering or vapor barrier. Collars for round ducts 15 inches in diameter or less shall be fabricated from 20 gauge galvanized steel. Collars for round ducts larger than 15 inches and square, and rectangular ducts shall be fabricated from 18 gauge galvanized steel. Collars shall be installed with fasteners on maximum 6 inch centers, except that not less than 4 fasteners shall be used.

2.7.4 Outside Air Intake Plenum

Outside air plenum shall be constructed of factory fabricated double wall plenums field cut to required dimensions. Plenum to include floor, ceiling, walls, and access doors. Plenum floor and wall shall be anchored to the catwalk. All connections to the catwalk and building structure shall be sealed airtight.

2.7.4.1 Walls, Ceiling and Floor

Panels shall consist of 18 gauge solid outer wall, and 22 gauge solid inner wall. Panels to be 2 inches thick, with 1.5 lb cubic foot density insulation. Insulation shall be non-combustible, moisture and mildew resistant and vermin proof. Internal panel reinforcement shall be minimum of 18 gauge galvanized steel and spaced so that span does not exceed 24 inches. Perimeter and internal reinforcement and panel sheets shall be welded and riveted to form a rugged metal-sheathed acoustical panel. Spot welds shall not exceed three inch on centers. Roof channels, aprons and corner joiners shall be make of 16 gauge galvanized steel formed to prevent a direct path for sound and/or air leakage. Floor channels shall be made of #18 gauge galvanized steel. Floor panels shall be designed for foot traffic. Panel joiners shall be made of #20 gauge galvanized steel and shall be roll formed to be greater in strength than standard 16 ga. joiners. Where these roll formed joiner sections are not utilized 16 ga. shall be provided. All panel accessories shall be furnished in standard lengths to be field cut to required dimensions. All panel joiners and connectors requiring felted surfaces shall have the felt field applied. The plenum structure shall be normally self-supporting. Where roof or floor spans and wall loadings require additional structure strength, it shall be furnished either by heavier roof and wall joiners, or, additional structural members and/or pipe columns. Plenums shall be designed to withstand a negative internal static of 2 inches w.c.

2.7.4.2 Access Door Panels

Door panels shall be constructed of solid 18 gauge galvanized metal sides. Doors shall be supplied as indicated. The doors shall be 2 inches thick of the overlapping seal type. Each door shall be supplied with single continuous air/acoustic seals around the sill, jambs and head. Doors shall have a minimum of two brass hinges and two brass single wedge lever tension latches operable from both sides. Each door shall be assembled with hinge hardware attached and adjusted, and latches to be installed in field. Doors shall be installed to open against the air pressure.

2.7.5 Sound Attenuation Equipment

a. Acoustical Duct Liner: Acoustical duct lining shall be fibrous glass designed exclusively for lining ductwork and shall conform to the requirements of ASTM C 1071, Type I and II. Liner composition may be uniform density, graduated density, or dual density, as standard with the manufacturer. Lining shall be coated, not less than 1 inch thick. Where acoustical duct liner is used, liner or combination of liner and insulation applied to the exterior of the ductwork shall be the thermal equivalent of the insulation specified in Section 15250 THERMAL INSULATION FOR MECHANICAL SYSTEMS. Duct sizes shown shall be increased to compensate for the thickness of the lining used. Net insertion loss value, static pressure drop, and air flow velocity capacity data shall be certified by a nationally recognized independent acoustical laboratory.

2.7.6 Diffusers, Registers, and Grilles

Units shall be factory-fabricated of steel, corrosion-resistant steel, or aluminum and shall distribute the specified quantity of air evenly over space intended without causing noticeable drafts, air movement faster than 50 fpm in occupied zone, or dead spots anywhere in the conditioned area. Outlets for diffusion, spread, throw, and noise level shall be as required for specified performance. Performance shall be certified according to ASHRAE 70. Inlets and outlets shall be sound rated and certified according to ASHRAE 70. Sound power level shall be as indicated. Diffusers and registers shall be provided with volume damper with accessible operator, unless otherwise indicated; or if standard with the manufacturer, an automatically controlled device will be acceptable. Volume dampers shall be opposed blade type for all diffusers and registers, except linear slot diffusers. Linear slot diffusers shall be provided with round or elliptical balancing dampers.

2.7.6.1 Diffusers

Diffuser types shall be as indicated. Ceiling mounted units shall be furnished with anti-smudge devices, unless the diffuser unit minimizes ceiling smudging through design features. Diffusers shall be provided with air deflectors of the type indicated. Ceiling mounted units shall be installed with rims tight against ceiling. Sponge rubber gaskets shall be provided between ceiling and surface mounted diffusers for air leakage control. Suitable trim shall be provided for flush mounted diffusers. Duct collar connecting the duct to diffuser shall be airtight and shall not interfere with volume controller. Return or exhaust units shall be similar to supply diffusers.

a. Linear Diffusers (LD): Unit shall be slot-type, constructed of 24 gauge galvanized steel. Each slot shall be provided with a two element pattern controller capable of a 180 degree air pattern adjustment. All adjustments shall be accessible from the face of the diffuser. Air pattern shall be factory set for two-way horizontal throw. Diffuser plenums shall be constructed of 24 gauge galvanized sheet metal and internally lined with 15 mm thick internal duct lining. Sizes as indicated.

2.7.6.2 Grilles

Units shall be fixed horizontal or vertical louver type. Supply grilles shall be provided with sponge-rubber gasket between flanges and wall. Wall supply grilles shall be installed at least 6 inches below the ceiling unless otherwise indicated. Return and exhaust grilles shall be located at least 6 inches above the floor unless otherwise indicated. Finish shall be white baked acrylic paint. Provide borders to suit mounting configuration and ceilng or wall type.

a. Wall Supply and Return Grille (SG, WG): Linear bar grille, bar size, 6.35 mm bars, 6.35 mm spacing, 15 degree deflection, extruded aluminum. Deflection bars shall be permanently fixed by crimping or welding and parallel to the long dimension. Horizontal bars shall be supported at a minimum of 230 mm centers. Bars shall be parallel to the floor and installed to deflect air toward floor.

b. Return Transfer Grille (RG, TG): Extruded aluminum or steel grilles with 32 mm border on all sides. Deflection blades shall be held firmly in place by mullions from behind and fixed in place by crimping or welding. Blade spacing shall be 1/2 inch and deflection shall be between 35 and 45 degrees. Blades shall be parallel to the long dimension or parallel to the floor. Provide with integral fire damper where indicated.

2.7.7 Louvers

Louvers for installation in exterior walls which are associated with the air supply and distribution system shall be as specified in Section 07600 SHEET METALWORK, GENERAL.

2.8 AIR SYSTEMS EQUIPMENT

2.8.1 Fans

Fans shall be tested and rated according to AMCA 210. Fans shall be direct driven or belt connected as indicated. V-belt drives shall be designed for not less than 150 percent of the connected driving capacity. Motor sheaves shall be variable pitch for 15 hp and below and fixed pitch as defined by ARI Guideline D. Variable pitch sheaves shall be selected to drive the fan at a speed which will produce the specified capacity when set at the approximate midpoint of the sheave adjustment. When fixed pitch sheaves are furnished, a replaceable sheave shall be provided when needed to achieve system air balance. Motors for V-belt drives shall be provided with adjustable rails or bases. Removable metal guards shall be provided for all exposed V-belt drives, and speed-test openings shall be provided at the center of all rotating shafts. Fans shall be provided with personnel screens

or guards on both suction and supply ends, except that the screens need not be provided, unless otherwise indicated, where ducts are connected to the fan. Fan and motor assemblies shall be provided with vibration-isolation supports or mountings as indicated. Vibration-isolation units shall be standard products with published loading ratings. Each fan shall be selected to produce the capacity required at the fan static pressure indicated. Sound power level shall be as indicated. The sound power level values shall be obtained according to AMCA 300. Standard AMCA arrangement, rotation, and discharge shall be as indicated.

2.8.1.1 Roof Mounted Fans

Spun aluminum roof mounted centrifugal fan with aluminum wheel and galvanized steel frame. Provide with motorized backdraft damper, disconnect switch and factory roof curb.

2.8.1.2 Panel Type Power Wall Ventilators

Fans shall be propeller type, assembled on a reinforced metal panel with venturi opening spun into panel. Provide direct or V-belt driven fan as indicated. Fans shall be furnished with wall mounting collar. Lubricated bearings shall be provided. Fans shall be fitted with wheel and motor side metal or wire guards which have a corrosion-resistant finish. Motor enclosure shall be dripproof type. Backdraft dampers shall be provided where indicated.

2.8.2 Coils

Coils shall be fin-and-tube type constructed of seamless copper tubes and aluminum fins mechanically bonded or soldered to the tubes. Copper tube wall thickness shall be a minimum of 0.020 inches. Aluminum fins shall be 0.0075 inch minimum thickness. Casing and tube support sheets shall be not lighter than 16 gauge galvanized steel, formed to provide structural strength. When required, multiple tube supports shall be provided to prevent tube sag. Each coil shall be tested at the factory under water at not less than 400 psi air pressure and shall be suitable for 200 psi working pressure. Coils shall be mounted for counterflow service. Coils shall be rated and certified according to ARI 410.

2.8.2.1 Water Coils

Water coils shall be installed with a pitch of not less than 1/8 inch per foot of the tube length toward the drain end. Headers shall be constructed of cast iron, welded steel or copper. Each coil shall be provided with a plugged vent and drain connection extending through the unit casing.

2.8.3 Air Filters

Air filters shall be listed according to requirements of UL 900.

2.8.3.1 Extended Surface Pleated Panel Filters

Filters shall be sectional, disposable type of the size and depth indicated and shall have an average efficiency of 25 to 30 percent when tested according to ASHRAE 52.1. Initial resistance shall be as indicated. Filters shall be UL Class 2. Media shall be nonwoven cotton and synthetic fiber mat. A wire support grid bonded to the media shall be attached to a

moisture resistant fiberboard frame. All four edges of the filter media shall be bonded to the inside of the frame to prevent air bypass and increase rigidity.

2.8.3.2 Extended Surface Nonsupported Pocket Filters

Filters shall be sectional, replaceable dry media type of the size and depth indicated and shall have an average efficiency of 60 to 65 percent when tested according to ASHRAE 52.1. Initial resistance shall be as indicated. Filters shall be UL Class 1. Media shall be fibrous glass, supported in the air stream by a wire or non-woven synthetic backing and secured to a galvanized steel metal header. Pockets shall not sag or flap at anticipated air flows. Each filter shall be installed with an extended surface pleated panel filter as a prefilter in a factory preassembled, side access housing or a factory-made sectional frame bank, as indicated.

2.8.3.3 Holding Frames

Frames shall be fabricated from not lighter than 16 gauge sheet steel with rust-inhibitor coating. Each holding frame shall be equipped with suitable filter holding devices. Holding frame seats shall be gasketed. All joints shall be airtight.

2.8.3.4 Filter Gauges

Filter gauges shall be dial type, diaphragm actuated draft and shall be provided for all filter stations, including those filters which are furnished as integral parts of factory fabricated air handling units. Gauges shall be at least 3-7/8 inches in diameter, shall have white dials with black figures, and shall be graduated in 0.01 inch, and shall have a minimum range of 1 inch beyond the specified final resistance for the filter bank on which each gauge is applied. Each gauge shall incorporate a screw operated zero adjustment and shall be furnished complete with two static pressure tips with integral compression fittings, two molded plastic vent valves, two 5 foot minimum lengths of 1/4 inch diameter aluminum tubing, and all hardware and accessories for gauge mounting.

2.9 AIR HANDLING UNITS

Custom built double wall air handling unit on structural steel channel base. Units shall include fans, coils, prefilters, secondary filters, dampers, mixing box, internal vibration isolators, access sections, fully wired service lighting and outlets, and appurtenances required for specified operation. Each air handling unit shall have dimensions suitable to fit space allocated and to provide the performance indicated. Air handling units and major components shall be products of manufacturing firms regularly engaged in manufacture of this material whose products have been in satisfactory use in similar service for not less than 10 years.

2.9.1 Casing

Casing sections shall be 2 inch double wall type constructed of 16 gauge factory painted outer wall and roof. Inner walls and roof shall be 20 gauge solid liner except fan sections shall be provided with perforated liner. Unit shall be constructed with a minimum 8 inch inch structural steel channel around the entire perimeter with intermediate channel and angle iron supports. Floor shall be a minimum of 12 gauge sheets tack welded to steel

channel base with all seams continuously welded. Base shall be capable of acting as a secondary drain pan capable of holding 1-1/2 inches of water. Base shall be provided with a minimum of four lifting lugs and shall be insulated as specified and lined with 22 gauge liner. Stiffeners of angle steel shall be provided to maintain a maximum casing deflection of 0.4 inches at 1.5 times the system working pressure.

2.9.2 Access Doors

Hinged 16 gauge double wall door with insulation and inner liner to match casing. Corners of doors shall be continuously welded to match casing and provided with heavy duty hinges and latches. Latches to be operable from both inside and outside the unit. Minimum door opening size shall be 6 feet high by 2 feet wide (where unit height permits). Locate to provide access to all internal equipment and as indicated. Door shall swing against the air pressure. Provide a minimum 8 inch by 8 inch double glazed laminated glass window in all access doors.

2.9.3 Internal Lining

In all sections except fan casing provide 2 inch thick, 1.5 lb/ft density fiberglass insulation. In fan sections provide 4 inch thick, 2.0 lb/ft density insulation with mylar sheet between liner and insulation.

2.9.4 Fans

Fans shall be single width, single-inlet, plug type with backward inclined airfoil blades. Fans and shafts shall be dynamically balanced prior to installation into air handling unit, then the entire fan assembly shall be statically and dynamically balanced at the factory after it has been installed in the air handling unit. Fans shall be mounted on steel shafts accurately ground and finished. Fan bearings shall be sealed against dust and dirt and shall be precision self-aligning ball or roller type. Bearing life shall be L50 rated at not less than 200,000 hours as defined by ABEMA 9and ABEMA 11. Bearings shall be permanently lubricated or lubricated type with lubrication fittings readily accessible at the drive side of the unit. Bearings shall be supported by structural shapes, or die formed sheet structural members, or support plates securely attached to the unit casing. Bearings may not be fastened directly to the unit sheet metal casing. Fans shall be furnished with a screened enclosure for fan and drive. Fans shall be driven by a unit-mounted motor connected to fans by V-belt drive. Belt drives shall be designed for not less than a 1.5 service factor based on motor nameplate rating. Motor sheaves shall be variable pitch for 10 hp and below and fixed pitch above 10 hp as defined by ARI Guideline D. Where fixed sheaves are required, variable pitch sheaves may be used during air balance, but shall be replaced with an appropriate fixed sheave after air balance is completed. Variable pitch sheaves shall be selected to drive the fan at a speed that will produce the specified capacity when set at the approximate midpoint of the sheave adjustment. Motors for V-belt drives shall be provided with adjustable bases. Fan motors shall have open dripproof enclosures. Fan and motor shall be mounted on a spring isolated structual steel base, type and deflection as indicated. Assembly shall be completely isolated from casing and base floor. Connections to casing shall be made with flexible fabric specifically designed for use in air handling units.

Unit fan or fans shall be selected to produce the required capacity at the fan static pressure. Sound power level shall be as indicated. The sound power level values shall be obtained according to AMCA 300 or ASHRAE 68.

2.9.5 Drain Pan

Provide for chilled water cooling coil. Drain pan shall be double-bottom type constructed of 16 gauge stainless steel, pitched to the drain connection. Drain pans shall be constructed water tight, treated to prevent corrosion, and designed for positive condensate drainage. When 2 or more cooling coils are used, with one stacked above the other, condensate from the upper coils shall not flow across the face of lower coils. Intermediate drain pans or condensate collection channels and downspouts shall be provided, as required to carry condensate to the unit drain pan out of the air stream and without moisture carryover.

2.9.6 Heating and Cooling Coils

Coils shall be provided as specified in paragraph AIR SYSTEMS EQUIPMENT for types indicated.

2.9.7 Air Filters

Air filters shall be as specified in paragraph AIR SYSTEMS EQUIPMENT for types and thickness indicated.

2.9.8 Access Sections and Mixing Boxes

Access sections shall be provided where indicated and shall be furnished with access doors as shown. Access sections and filter/mixing boxes shall be constructed in a manner identical to the remainder of the unit casing and shall be equipped with access doors. Mixing boxes shall be designed to minimize air stratification and to promote thorough mixing of the air streams.

2.9.9 Dampers

Extruded aluminum airfoil blades with extruded vinyl or rubber edge seals. Blade ends sealed with stainless steel "arc seals." The external frame shall be of 14 gauge welded steel with 1/4 inch plate bearing bars and bronze insert bearings. Linkage externally arranged for opposed blade action; multiple sections of each damper linked together with welded or cotter-pin connections. Damper leakage rate not to exceed 2 cfm per square foot at 1 inch water column pressure.

2.9.10 Electrical

Unit shall be factory wired for two 120 volt field power connections. One circuit shall be dedicated to unit service outlets and one circuit shall be dedicated to unit service lights. All wiring shall be run in metal conduit and shall conform to all applicable specification sections of Division 16. Terminate service outlet conduit in external junction box for connection to building power systems. Wiring required to be removed for shipping shall be neatly coiled in shipping section and be reinstalled in field by electrical contractor. Provide pull strings as necessary.

a. Service Outlets: Provide duplex ground fault interrupt circuits in each air handling unit section and as indicated. Cover plates to be stainless steel.

b. Services Lights: Provide 100 watt vapor tight light fixtures with cast aluminum guards as in each fan section and as required to service all unit components. Provide separate switching for supply fan section and return fan section. Switches to be located on the outside of the unit adjacent to access doors.

2.10 TERMINAL UNITS

2.10.1 Variable Air Volume (VAV) Terminal Units

VAV terminal units shall be the type, size, and capacity shown and shall be mounted in the ceiling and shall be suitable for single duct system applications. Actuators and controls shall be as specified in Section 15951DIRECT DIGITAL CONTROL FOR HVAC. Unit enclosures shall be constructed of galvanized steel not lighter than 22 gauge or aluminum sheet not lighter than 18 gauge. Casings shall be provided with 1/2 inch internal lining. All exposed insulation edges shall be coated with NFPA 90A approved sealant to prevent entrainment of fibers. Units with flow limiters are not acceptable. Unit air volume shall be factory preset and readily field adjustable without special tools. Reheat coils shall be provided as indicated. A flow chart shall be attached to each unit. Acoustic performance of the terminal units shall be based upon units tested according to ARI 880. Sound power level shall be as indicated. Acoustical lining shall be according to NFPA 90A.

2.10.1.1 Constant Volume, Single Duct

Constant volume, single duct, terminal units shall be provided with a calibrated air volume sensing device, air valve or damper, actuator, and accessory relays. Units shall control air volume to within plus or minus 5 percent of each air set point volume as determined by the temperature sensor with variations in inlet pressures from 3/4 to 6 inch water gauge. Internal resistance of units shall not exceed values indicated at the maximum flow range. External differential pressure taps separate from the control pressure taps shall be provided for air flow measurement with a 0 to 1 inch water gauge.

2.10.1.2 Variable Volume, Single Duct

Variable volume, single duct, terminal units shall be provided with a calibrated air volume sensing device, air valve or damper, actuator, and accessory relays. Units shall control air volume to within plus or minus 5 percent of each air set point volume as determined by the temperature sensor with variations in inlet pressures from 3/4 to 6 inch water gage. Internal resistance of units shall not exceed values indicated at the maximum flow range. External differential pressure taps separate from the control pressure taps shall be provided for air flow measurement with 0 to 1 inch water gauge range.

2.10.1.3 Variable Volume, Single Duct, Fan-Powered

Variable volume, single duct, series fan-powered terminal units shall be provided with a calibrated air volume sensing device utilizing integral

multipoint averaging flow sensor ring, air valve or damper, fan and motor, and accessory relays. Units shall control primary air volume to within plus or minus 5 percent of each air set point as determined by the temperature sensor with variations in inlet pressure from 3/4 to 6 inch water gauge. Unit fan shall be centrifugal, direct-driven, double-inlet type with forward curved blades. Fan motor shall be either single speed with speed controller or three-speed, permanently lubricated, permanent split-capacitor type. Fan/motor assembly shall be isolated from the casing to minimize vibration transmission.

2.10.1.4 Terminal Unit Heating Coils

Hot-water coils shall be fin-and-tube type constructed of seamless copper tubes and copper or aluminum fins mechanically bonded or soldered to the tubes. Headers shall be constructed of cast iron, welded steel or copper. Casing and tube support sheets shall be 16 gauge galvanized steel, formed to provide structural strength. Tubes shall be correctly circuited for proper water velocity without excessive pressure drop and they shall be drainable where required or indicated. At the factory, each coil shall be tested at not less than 250 psi air pressure and shall be suitable for 200 psi working pressure. Drainable coils shall be installed with a pitch of not less than 10 mm per m of tube length toward the drain end. Coils shall conform to the provisions of ARI 410.

2.11 FACTORY PAINTING

Units which are not of galvanized construction according to ASTM A 123 or ASTM A 924 shall be factory painted with a corrosion resisting paint finish. Internal and external ferrous metal surfaces shall be cleaned, phosphatised and coated with a paint finish which has been tested according to ASTM B 117, ASTM D 1654, and ASTM D 3359. Evidence of satisfactory paint performance for a minimum of 125 hours for units to be installed indoors and 500 hours for units to be installed outdoors shall be submitted. Rating of failure at the scribe mark shall be not less than 6, average creepage not greater than 1/8 inch. Rating of the inscribed area shall not be less than 10, no failure. On units constructed of galvanized steel which have been welded, exterior surfaces of welds or welds that have burned through from the interior shall receive a final shop docket of zinc-rich protective paint according to ASTM D 520 Type I.

2.12 VIBRATION ISOLATION

Provide vibration isolation mountings for all fans, terminal units and air handling units as specified.

2.12.1 Computations

Following selection of equipment mounted or suspended on isolation mountings, the manufacturer shall prepare computations with vibration isolation unit selections showing how vibration isolation efficiency and seismic restraint will be produced; submit for review prior to ordering materials.

2.12.2 Neoprene Pad

Pad of waffle type bridge bearing neoprene between the mount and the bearing surface.

2.12.3 Spring Hangers

Spring hangers shall be double deflection type with bridge bearing neoprene snubbers.

2.12.4 Neoprene Hangers

Neoprene hangers shall utilize bridge bearing neoprene and be suitable for threaded rod hangers or eyebolt connections.

2.12.5 Air Handling Units

Internal restrained spring isolators with seismic snubbers.

2.12.6 Vibration Isolation Schedule

Provide vibration isolation mountings in accordance with the following schedule:

Equipment	Isolator Type
Terminal Units	Neoprene hangers
Transfer Fans	Neoprene pad
Air Handling Units	2 inch deflection spring
Exhaust Fans	1 inch spring hanger
Unit Heaters	1 inch spring hanger

3 EXECUTION

3.1 INSTALLATION

Work shall be installed as shown and according to the manufacturer's diagrams and recommendations.

3.1.1 Access Panels

Access panels shall be provided for concealed valves, vents, controls, dampers, and items requiring inspection or maintenance. Access panels shall be of sufficient size and located so that the concealed items may be serviced and maintained or completely removed and replaced. Access panels shall be as specified in Section 05500 MISCELLANEOUS METALS.

3.1.2 Flexible Connectors

Pre-insulated flexible connectors and flexible duct shall be attached to other components in accordance with the latest printed instructions of the manufacturer to ensure a vapor tight joint. Hangers, when required to suspend the connectors, shall be of the type recommended by the connector or duct manufacturer and shall be provided at the intervals recommended.

3.1.3 Sleeved and Framed Openings

Space between the sleeved or framed opening and the duct or the duct insulation shall be packed as specified in Section 07270 FIRESTOPPING for fire rated penetrations. For non-fire rated penetrations, the space shall be packed as specified in Section 07920 JOINT SEALING.

3.1.4 Ductwork

Installation shall be according to SMACNA-06 unless otherwise indicated. Duct supports for sheet metal ductwork shall be according to SMACNA-06, unless otherwise specified. Friction beam clamps indicated in SMACNA-06 shall not be used. Risers on high velocity ducts shall be anchored in the center of the vertical run to allow ends of riser to move due to thermal expansion. Supports on the risers shall allow free vertical movement of the duct. Supports shall be attached only to structural framing members and concrete slabs. Supports shall not be anchored to metal decking unless a means is provided and approved for preventing the anchor from puncturing the metal decking. Where supports are required between structural framing members, suitable intermediate metal framing shall be provided. Where C-clamps are used, retainer clips shall be provided.

3.1.5 Acoustical Duct Lining

Lining shall be applied in cut-to-size pieces attached to the interior of the duct with nonflammable fire resistant adhesive conforming to ASTM C 916, Type I, NFPA 90A, UL 723, and ASTM E 84. Top and bottom pieces shall lap the side pieces and shall be secured with welded pins, adhered clips of metal, nylon, or high impact plastic, and speed washers or welding cup-head pins installed according to SMACNA-06. Welded pins, cup-head pins, or adhered clips shall not distort the duct, burn through, nor mar the finish or the surface of the duct. Pins and washers shall be flush with the surfaces of the duct liner and all breaks and punctures of the duct liner coating shall be sealed with the nonflammable, fire resistant adhesive. Exposed edges of the liner at the duct ends and at other joints where the lining will be subject to erosion shall be coated with a heavy brush coat of the nonflammable, fire resistant adhesive, to prevent delamination of glass fibers. Duct liner may be applied to flat sheet metal prior to forming duct through the sheet metal brake. Lining at the top and bottom surfaces of the duct shall be additionally secured by welded pins or adhered clips as specified for cut-to-size pieces. Other methods indicated in SMACNA-06 to obtain proper installation of duct liners in sheet metal ducts, including adhesives and fasteners, will be acceptable.

3.1.6 Dust Control

To prevent the accumulation of dust, debris and foreign material during construction, temporary dust control protection shall be provided. The distribution system (supply and return) shall be protected with temporary seal-offs at all inlets and outlets at the end of each day's work. Temporary protection shall remain in place until system is ready for startup.

3.1.7 Insulation

Thickness and application of insulation materials for ductwork, piping, and equipment shall be according to Section 15250 THERMAL INSULATION FOR

MECHANICAL SYSTEMS. Outdoor air intake ducts and plenums shall be externally insulated up to the point where the outdoor air reaches the conditioning unit.

3.1.8 Duct Test Holes

Holes with closures or threaded holes with plugs shall be provided in ducts and plenums as indicated or where necessary for the use of pitot tube in balancing the air system. Extensions, complete with cap or plug, shall be provided where the ducts are insulated.

3.2 DUCTWORK LEAK TEST

Ductwork leak test shall be performed for all medium pressure air distribution between the air handling units and the terminal units and a representative section of each of the low pressure supply, return and exhaust ductwork. Section to be selected by the Contracting Officer. Test procedure, apparatus, and report shall conform to SMACNA-10. The maximum allowable leakage rate is 12.2 cfm per 100 square feet at 3.0 inches static pressure. Ductwork leak test shall be completed with satisfactory results prior to applying insulation to ductwork exterior.

3.3 CLEANING AND ADJUSTING

Pipes shall be cleaned free of scale and thoroughly flushed of foreign matter. A temporary bypass shall be provided for water coils to prevent flushing water from passing through coils. Strainers and valves shall be thoroughly cleaned. Prior to testing and balancing, air shall be removed from water systems by operating the air vents. Temporary measures, such as piping the overflow from vents to a collecting vessel shall be taken to avoid water damage during the venting process. Air vents shall be plugged or capped after the system has been vented. Inside of air terminal units, ducts, plenums, and casing shall be thoroughly cleaned of debris and blown free of small particles of rubbish and dust and then shall be vacuum cleaned before installing outlet faces. Equipment shall be wiped clean, with traces of oil, dust, dirt, or paint spots removed. Temporary filters shall be provided prior to startup of all fans that are operated during construction, and new filters shall be installed after all construction dirt has been removed from the building, and the ducts, plenums, casings, and other items specified have been vacuum cleaned. System shall be maintained in this clean condition until final acceptance. Bearings shall be properly lubricated with oil or grease as recommended by the manufacturer. Belts shall be tightened to proper tension. Control valves and other miscellaneous equipment requiring adjustment shall be adjusted to setting indicated or directed. Fans shall be adjusted to the speed indicated by the manufacturer to meet specified conditions.

3.4 TESTING, ADJUSTING, AND BALANCING

Testing, adjusting, and balancing shall be as specified in Section 15990 TESTING, ADJUSTING AND BALANCING OF HVAC SYSTEMS. Testing, adjusting, and balancing shall begin only when the air supply and distribution, including controls, has been completed, with the exception of performance tests. Provide fan drive changes as required.

3.5 PERFORMANCE TESTS

After testing, adjusting, and balancing has been completed as specified, each system shall be tested as a whole to see that all items perform as integral parts of the system and temperatures and conditions are evenly controlled throughout the building. Corrections and adjustments shall be made as necessary to produce the conditions indicated or specified. Capacity tests and general operating tests shall be conducted by an experienced engineer. Tests shall cover a period of not less than 2 days for each system and shall demonstrate that the entire system is functioning according to the specifications. Coincidental chart recordings shall be made at points indicated on the drawings for the duration of the time period and shall record the temperature at space thermostats or space sensors, the humidity at space humidistats or space sensors and the ambient temperature and humidity in a shaded and weather protected area.

3.6 FIELD TRAINING

The Contractor shall conduct a training course for operating and maintenance personnel as designated by the Contracting Officer. Training shall be provided for a period of 6 hours of normal working time and shall start after the system is functionally complete but prior to the performance tests. The field instruction shall cover all of the items contained in the approved Operating and Maintenance Instructions.

END OF SECTION

SECTION 15951

DIRECT DIGITAL CONTROL FOR HVAC

1 GENERAL

1.1 REFERENCES

The publications listed below form a part of this specification to the extent referenced. The publications are referred to in the text by basic designation only.

AIR MOVEMENT AND CONTROL ASSOCIATION (AMCA)

AMCA 500	(1989) Test Methods for Louvers, Dampers and Shutters

AMERICAN NATIONAL STANDARDS INSTITUTE (ANSI)

ANSI 135	(1995) BACnet Standards

AMERICAN SOCIETY FOR TESTING AND MATERIALS (ASTM)

ASTM A 269	(1994a) Seamless and Welded Austenitic Stainless Steel Tubing for General Service
ASTM B 88	(1993a) Seamless Copper Water Tube
ASTM D 635	(1991) Rate of Burning and/or Extent and Time of Burning of Self-Supporting Plastics in a Horizontal Position
ASTM D 1693	(1970; R 1988) Environmental Stress-Cracking of Ethylene Plastics

AMERICAN SOCIETY OF HEATING, REFRIGERATING AND AIR-CONDITIONING ENGINEERS (ASHRAE)

ASHRAE-03	(1993; Errata) Handbook, Fundamentals I-P Edition
ASHRAE-135	(1995) BACnet Standards

AMERICAN SOCIETY OF MECHANICAL ENGINEERS (ASME)

ASME B16.34	(1988) Valves - Flanged, Threaded, and Welding End
ASME B40.1	(1991) Gauges - Pressure Indicating Dial Type - Elastic Element
ASME BPV VIII Div 1	(1992; Addenda Dec 1992, Dec 1993) Boiler and Pressure Vessel Code; Section VIII, Pressure Vessels Division 1 - Basic Coverage

ASME PTC 19.3	(1974; R 1986) Instruments and Apparatus: Part 3 Temperature Measurement

CODE OF FEDERAL REGULATIONS (CFR)

47 CFR 15	Radio Frequency Devices
47 CFR 68	Connection of Terminal Equipment to the Telephone Network

INSTITUTE OF ELECTRICAL AND ELECTRONICS ENGINEERS (IEEE)

IEEE C62.41	(1991) Surge Voltages in Low-Voltage AC Power Circuits
IEEE Std 142	(1991) IEEE Recommended Practice for Grounding of Industrial and Commercial Power Systems

INSTRUMENT SOCIETY OF AMERICA (ISA)

ISA S7.3	(1975; R 1981) Quality Standard for Instrument Air

NATIONAL ELECTRICAL MANUFACTURERS ASSOCIATION (NEMA)

NEMA 250	(1991) Enclosures for Electrical Equipment (1000 Volts Maximum)
NEMA ICS 1	(1993) Industrial Controls and Systems

NATIONAL FIRE PROTECTION ASSOCIATION (NFPA)

NFPA 90A	(1993) Installation of Air Conditioning and Ventilating Systems

SHEET METAL & AIR CONDITIONING CONTRACTORS' NATIONAL ASSOCIATION (SMACNA)

SMACNA-07	(1993) HVAC Systems - Testing, Adjusting and Balancing

UNDERWRITERS LABORATORIES (UL)

UL 94	(1991; Rev thru May 1994) Tests for Flammability of Plastic Materials for Parts in Devices and Appliances
UL 555S	(1993; Rev Sep 1994) Leakage Rated Dampers for Use in Smoke-Control Systems
UL 916	(1994; Rev Apr 1994) Energy Management Equipment

1.2 GENERAL REQUIREMENTS

The Direct Digital Control (DDC) shall be a complete system suitable for the heating, ventilating and air-conditioning (HVAC) system, the collection and processing of utility meter readings, and providing interface, through the base Wide Area Network (WAN) to the Energy Management Central System in Building 555 and client workstations at various locations on the network. The Contractor shall provide all services, materials, and equipment necessary for a complete Direct Digital Control (DDC) system for the project building. The DDC system shall be compatible with the existing base Energy Management Central Station. The existing Energy Management Central Station is a configuration of servers and client workstations running Windows NT operating system. The Contractor shall expand the existing Energy Management Central Station as a distributed processing network as described and shown. The Contractor shall integrate all expansion hardware and software with the existing system and provide a complete and fully function system. The integrated expanded system shall provide operator interaction and dynamic process manipulation, including overall total system supervision, coordination, and control. Sensed data shall be obtained from standalone DDC panels and controllers which are located within their particular data environments (DE). The standalone DDC panels shall manage all control functions within their DE as specified. The standalone DDC panels shall communicate with the central station located in Building 555 through a maintenance terminal located in the project building. Where they are referred to in this specification, every connected analog output (AO), analog input (AI), digital output (DO), and digitla input (DI) represents a point.

1.2.1 Nameplates, Lens Caps, and Tags

Nameplates and lens caps bearing legends as shown and tags bearing device-unique identifiers as shown shall have engraved or stamped characters. Nameplates shall be mechanically attached to Direct Digital Control (DDC) panel interior doors. A plastic or metal tag shall be mechanically attached directly to each device or attached by a metal chain or wire. Each airflow measurement station shall have a tag showing flow rate range for signal output range, duct size, and identifier as shown.

1.2.2 Verification of Dimensions

The Contractor shall become familiar with all details of the work, shall verify all dimensions in the field, and shall advise the Contracting Officer of any discrepancy before performing any work.

1.2.3 Drawings

Because of the small scale of the drawings, it is not possible to indicate all offsets, fittings, and accessories that may be required. The Contractor shall investigate the mechanical, electrical, and finish conditions that could affect the work to be performed, shall arrange such work accordingly, and shall furnish all work necessary to meet such conditions.

1.2.4 Power-Line Surge Protection

Equipment connected to ac circuits shall be protected from power-line surges. Equipment protection shall meet the requirements of IEEE C62.41. Fuses shall not be used for surge protection.

1.2.5 System Overall Reliability Requirement

The system shall be configured and installed to yield a mean time between failure (MTBF) of at least 40,000 hours. Each DDC panel shall be designed, configured, installed and programmed to provide for stand alone operation with minimal performance degradation on failure of other system components to which it is connected or with which it communicates.

1.2.6 Multiple DDC Panel Requirement

Where the HVAC or unitary system to be controlled by the DDC system is located in multiple mechanical rooms, each mechanical room shall have access to the primary controller to make adjustments to the controllers assigned to that system. DDC controllers shall not control equipment located in a different mechanical room. DDC controllers shall be located in the same room as the equipment being controlled or in an adjacent space which has direct access to the equipment room.

1.2.6.1 Unitary DDC Controllers

Unitary controls and/or "smart" devices are acceptable. However operator and maintenance access through the maintenance computers and each building occupant interface shall be provided.

1.3 SUBMITTALS

Government approval is required for submittals with a "GA" designation; submittals having an "FIO" designation are for information only. The following shall be submitted in accordance with Section 01330 SUBMITTALS:

SD-01 Data

Training Data; GA.

Training Course: The supplier shall submit a training course in the maintenance and operation of the systems, approved 30 days prior to the start of training and with training complete 10 days prior to the Performance Verification/Acceptance test. The Training Course material shall consist of:

Training Material Core

Draft O&M Manuals

Audiovisual Materials

The training course shall be conducted for a number of operating staff members, total number of personnel to be designated by the Contracting Officer, in the maintenance and operation of the systems including specified hardware and software. A training day is defined as 8 hours of classroom instruction, including breaks and lunchtime, Monday through Friday, during the daytime shift in effect at the training facility. The course shall be taught at the project site for a time period mutually agreed upon by the Contracting Officer and Contractor based upon training manuals, draft O&M manuals, project content and size, and previous installed systems of the same manufacture. For guidance in planning the required instruction, the

Contractor shall assume that the attendees will have a high school education or equivalent, and are familiar with HVAC, communication, and computer systems. No training shall be scheduled until training manuals and draft O&M manuals have been approved by the Government.

The training course shall include lesson plans and training manuals, including type of training to be provided, with a list of reference material. The training shall be oriented to the specific systems being installed, the layout and location of each HVAC control panel, the layout of one of each type of unitary equipment and the locations of each, the location of each system control device and attached components, the associated software functions, features, and application, preventive maintenance, troubleshooting, diagnostics, calibration, adjustment, commissioning, tuning, and repair procedures. Typical systems and similar systems may be treated as a group, with instruction on the physical layout of one such system. One training manual shall be furnished for each trainee, plus two additional copies for archival storage at the project site. The manuals shall include the agenda, the defined objectives for each lesson, and a detailed description of the subject matter for each lesson. Two (2) copies of audiovisual materials shall be included, for archival storage at the project site, either as a part of the printed training manuals or on the same media as that to be used during the training session.

Preliminary Data; GA.

The system supplier shall submit preliminary equipment data in booklet form, indexed to the to the specification paragraphs and shall consist of data sheets that document compliance with the specification. Included shall be a list of service organizations that are in reasonably convenient location to service the equipment on a regular and emergency basis during the warranty period. The preliminary data shall provide sufficient information for the installation of the system including descriptions, analyses, calculations used in sizing equipment, sequence of operation to show how the equipment will operate to meet the specified performance, and provide capabilities for future expansion. The data package shall include the following:

a. Catalog cut sheets of the DDC controller(s) to be utilized including: memory size, automatic start up operations, database update procedure, expansion capability and method of implementation and operation.

b. Catalog cut sheets of the building’s primary controller/maintenance computer with communication access, including statement that the desk top PC and associated software is listed in Microsoft's "Hardware Compatibility List," modular and of proven reliability, and will be provided in a lockable cabinet at the location noted on the plans.

c. Provide a list of the supervisory specialists and technicians assigned to the job site to assist and/or accomplish system installation, startup, and commissioning. Include with the list a statement that these assigned personnel are trained and experienced for their assigned duties.

d. Database entry forms or data listings: The completed data entry forms or data summaries, if data entry is done through interactive computer interfacing, utilizing data required by the contract

documents and other pertinent information required for complete installation of the database. Additional data to provide a complete and operational control system shall be identified and requested from the Government.

e. Drawings: The contract drawings are available in AutoCAD 14 to be utilized for incorporation of as-built information. The drawing series shall include a drawing index, list of symbols, each component location with unique identifier, each control system including block diagrams, wiring diagrams, and sequence of operation. The sequence of operation for each HVAC control system shall be in the language and format of this specification. No operational deviations from specified sequences will be permitted without prior written approval of the Contracting Officer. The wiring diagram shall show the interconnection of wires and cables from the identified terminals of starters and packaged equipment, input/output devices to DDC controller terminal blocks, to the building’s primary controller/maintenance terminal, to the remote EMS equipment in Building 555, including all necessary jumpers and ground connections. The wiring diagram shall show the labels of all conductors. All sources of power required for HVAC control systems and for packaged equipment control systems shall be identified back to the panelboard circuit breaker number, system component, magnetic starter, or packaged control equipment circuit. Each power supply and transformer not integral to a starter or packaged equipment shall be shown. The connected volt ampere load and the power supply volt ampere rating shall be shown.

f. Details of surge protection device installations.

g. Valve schedules: The valve schedule shall include each valve's unique identifier, size, flow coefficient (Cv), pressure drop at specified flow rate, spring range, and actuator size, supported by close off pressure data, dimensions, operation rate, and access and clearance requirements data.

h. Damper schedules: The damper schedule shall contain each damper's and each actuator's identifier, nominal and actual sizes, orientation of axis and frame, direction of blade rotation, spring ranges, operation rate, locations of actuators and damper end switches, arrangement of sections in multisection dampers, and methods of connecting dampers, actuators, and linkages. The damper schedule shall include the maximum expected velocity through the damper at the intended location and the maximum leakage rate at the operating static pressure differential. The damper schedule shall contain actuator selection data, supported by calculations of the torque required to move and seal the dampers; and access and clearance requirements.

i. Compressed-air station schematic on 34 by 22 inch sheets. The compressed-air station schematic diagram shall show all equipment, including compressor with motor horsepower and voltage; starter; isolators; manual bypasses; tubing sizes; drain piping and drain traps; reducing valves; dryer; and data on manufacturers' names and model numbers, mounting, access, and clearance requirements. Air compressor and air dryer data shall include calculations of the air consumption of current-to-pneumatic transducers (EPs) and of any

other control system devices to be connected to the compressed-air station, the number of starts per hour and the running time for the unit selected, and the compressed air supply dewpoint temperature at 20 psig.

j. ASME air storage tank certificate.

SD-08 Statements

Performanfance Verification Testing and Acceptance Testing; FIO.

Three (3) copies of the Performance Verification/Acceptance Test procedures shall be due 15 days prior to Performance Verification/Acceptance Test. Using Commissioning Procedures previously approved, physical and functional requirements of the project, including devices, controller’s, computer’s, communication’s hardware and software, compliance of the installed system with the contract documents shall be demonstrated. The performance verification/acceptance test procedures shall explain, step by step, the actions and expected results that will demonstrate that the systems perform in accordance with the sequences of operation from field devices to central monitoring stations. The performance verification/acceptance test shall not be started until after receipt of written permission by the Government, based on the approved Commissioning Procedures, delivery of the Draft M&O Manuals, Completion of the Training Course by Government Personnel, and the Contractor's written certification of successful completion of site testing and training. The three (3) copies of the Performance Verification/Acceptance Test are to be routed through the Contracting Officer to:

a. One copy to 62 CES/CEOEI.

b. One copy to 62 CES/CEOF.

c. One copy to 62 CES/CECC.

Commissioning Procedures; FIO.

The system supplier shall develop and submit Commissioning Procedures for the system 35 days prior to the Performance Verification/Acceptance Test. The Commissioning Procedures shall be in accordance with specification section 15951M2, “Commissioning Requirements,” and shall demonstrate commissioning procedures for each HVAC control system, for each type of terminal unit control system, and in coordination with other aspects and systems within the facility. The commissioning procedures shall refer to the devices by their unique identifiers as shown and shall include step by step configuration procedures for each system. The configuration procedures shall include a configuration check sheet showing all configuration parameters.

System’s Calibration, Adjustments, and Commissioning

Personnel, equipment, instrumentation, and supplies shall be provided by the Contractor as necessary to perform site testing, adjusting, calibration and commissioning. The tests shall not be conducted during scheduled seasonal off periods of base heating and cooling systems. Wiring shall be tested for continuity and for ground, open, and short circuits. Ground rods installed by the Contractor shall be tested as specified in IEEE Std 142. Written

Government approval of the specific testing procedures documentation and coordination, as noted, shall be obtained prior to the Performance Verification/Acceptance Test. Commissioning shall be in accordance with Specification Section 15951M2, “Commissioning Requirements,” and shall demonstrate commissioning procedures for each HVAC control system, for each type of terminal unit control system, and in coordination with other aspects and related systems within/without the facility. Instrumentation and controls shall be calibrated and the specified accuracy shall be verified using test equipment with calibration traceable to NIST standards. Mechanical control devices shall be adjusted to operate as specified. Control parameters and logic (virtual) points including control loop setpoints, VAV Cfm, gain constants, and integral constraints, shall be incorporated and/or adjusted before the system is placed on line. Communications requirements shall be as indicated. Control system commissioning shall be performed for each HVAC system’s components, unitary system’s components, primary controller, communications, and central station.

SD-09 Reports

Test Reports; FIO.

Six copies of the site testing data. Original copies of all data produced during site testing, including results of each test procedure, after approval of the site tests.

Performance Verification and Acceptance Report; FIO.

Six copies of the performance verification and acceptance test report after completion of a successful test. Documentation of test results for the entire HVAC control system complete, in booklet form and indexed, within 30 days after each test.

SD-13 Certificates

Certificate of Compliance; GA.

A Certificate of Compliance, signed by the Designing Firm and Installing Contractor, shall be provided that includes results of functional tests, diagnostics, and calibrations, including written certification, shall state that the installed complete system has been calibrated, tested, meets energy conservation requirements, and is ready to begin performance verification testing. The Certificate shall have attached a copy of the approved performance verification test procedure.

SD-19 Operation and Maintenance Manuals

Operation and Maintenance Manuals; GA.

The Technical Data Package consisting of the operation, maintenance data (including As-Built Drawings), and software application shall be in manual format. The final copies of the O&M manuals shall be provided within 30 days after completing the Performance Verification/Acceptance Test. Three (3) copies of the final manuals shall be provided in hard copy. The final hard copies shall include a table of contents and tab sheets (with tab sheets placed at the beginning of each chapter or section and at the beginning of each appendix), bound in hardback, and placed in loose leaf

binders. Each manual's contents shall be identified on the cover. The manuals shall include the names, addresses, and telephone numbers of each subcontractor installing equipment and systems, and of the nearest service representatives for each item of equipment and each system.

One (1) copy of the final Operation, Maintenance (including As-Builts) shall be placed on CD-ROM. Text shall be in Microsoft Word. Drawings shall be Computer Aided Design/Drafting (CADD) in AutoCAD for Windows and on a single 5-1/4″ compact disk (CD). All disks are to be factory formatted ANSI/ISO for use in ISO CCS standard systems. Each disk shall be provided a label which indicates the Building Number, the Project Number (PQWY), and the date created. All contract CADD drawing files shall be included in the drawing database including associated ‘x-ref’ files, unique text font files e.g. ‘fractions’ etc. The loading of the CADD drawing files onto the Base master server/hard drive will be accomplished without the need for additional references to other drawing files which are not on the provided CD. The Contractor shall be available to answer questions concerning interpretation of the database and related matters of this nature. The Contractor shall provide a written narrative explaining the CADD drawing components, a complete listing of all drawing files on the disk, attributes libraries, and layering schedule as developed for the design. Layering of drawings shall conform to the AIA document titled: "CADD Layer Guidelines" as established by the American Institute of Architects (AIA) unless otherwise directed.

Software Manuals; GA.

The software manual shall be segmented with tab sheets placed at the beginning of each level of computer application in the system. The manual shall describe the functions of all software, and shall include all other information necessary to enable proper loading, testing and operation. Manual shall include, but not be limited to the following:

a. Definitions of terms and functions.

b. Operator commands.

c. System access requirements.

d. Data entry requirements.

e. Descriptions of application software.

f. Description of database structure and interface with programs.

g. Alarms.

Operator's Manuals; GA.

The Operation Manuals shall include for each HVAC control system, step-by-step procedures required for each HVAC control system's startup, operation, and shutdown. The manuals shall include all detail drawings, equipment data, and manufacturer supplied operation manuals for all equipment. Should include, but not limited to, the following:

a. General description and specifications.

b. Installation and checkout procedures.

c. Equipment electrical schematics and layout drawings.

d. System schematics and I/O device wiring lists.

e. Alignment and calibration procedures.

f. Manufacturer's repair parts list indicating sources of supply.

Maintenance Manual and As-Built Drawings; GA.

The maintenance manuals shall include a maintenance check list for each HVAC control system. Maintenance manuals shall include spare parts data and recommended maintenance tool kits for all control devices. Maintenance instructions shall include recommended repair methods, either field repair, factory repair, or whole-item replacement. The manual shall contain a list of service organizations qualified to service the HVAC control system, including the service organization name and telephone number. If operation, maintenance and software manuals are provided in a common volume, they shall be clearly differentiated and separately indexed. Included in the Maintenance Manuals shall be the as-built drawings.

1.4 DELIVERY AND STORAGE

Products shall be stored with protection from the weather, humidity and temperature variations, dirt and dust, and other contaminants, within the storage-condition limits published by the equipment manufacturer. Dampers shall be stored so that seal integrity, blade alignment and frame alignment are maintained.

1.5 MAINTENANCE AND SERVICE

1.5.1 General Requirements

Services, materials and equipment shall be provided as necessary to maintain the entire system in an operational state as specified for a period of 1 year after successful completion and acceptance of the Performance Verification Test. Impacts on facility operations shall be minimized.

1.5.2 Description of Work

The adjustment and repair of the system shall include the manufacturer's required adjustments of computer equipment, software updates, transmission equipment and instrumentation and control devices.

1.5.3 Personnel

Service personnel shall be qualified to accomplish work promptly and satisfactorily. The Government shall be advised in writing of the name of the designated service representative, and of any changes in personnel.

1.5.4 Scheduled Inspections

Two inspections shall be performed at 6 month intervals and all work required shall be performed. Inspections shall be scheduled in June/July/August and December/January/February time frames to establish commissioning verification of system operation during seasonal changes

effecting heating and cooling systems and to provide bench marks for operating personnel. Coordination with and assistance from Government Maintenance Personnel will be required during inspections. These inspections shall include:

a. Visual checks and operational tests of all equipment.

b. Fan checks and filter changes for all control system equipment.

c. Clean all control system equipment including interior and exterior surfaces.

d. Check and calibrate each field device. Check and calibrate 50 percent of the total analog points during the first inspection. Check and calibrate the remaining 50 percent of the analog points during the second major inspection. Certify analog test instrumentation accuracy to be twice that of the device being calibrated. Randomly check at least 25 percent of all digital points for proper operation during the first inspection. Randomly check at least 25 percent of the remaining digital points during the second inspection.

e. Run all system software diagnostics and correct all diagnosed problems.

f. Resolve any previous outstanding problems.

1.5.5 Scheduled Work

This work shall be performed during regular working hours, Monday through Friday, excluding legal holidays.

1.5.6 Emergency Service

The Government will initiate service calls when the system is not functioning properly. Qualified personnel shall be available to provide service to the system. A telephone number where the service supervisor can be reached at all times shall be provided. Service personnel shall be at the site within 24 hours after receiving a request for service. The control system shall be restored to proper operating condition within 3 calendar days after receiving a request for service.

1.5.7 Operation, Records and Logs

Operational adjustments and repairs shall include verification of the control system operation as demonstrated by the applicable tests of the performance verification test by Government personnel. Government personnel will establish dated records and logs to be kept of each maintenance task, with cumulative records for each major component, and for the complete system chronologically. A continuous log shall be maintained for all devices. The log shall contain all initial analog span and zero calibration values and all digital points provided by the Contractor. Complete logs shall be kept and shall be available for inspection onsite, demonstrating that planned and systematic adjustments and repairs have been accomplished for the control system by both the Contractor and the government.

1.5.8 Work Requests

Each service call request shall be recorded as received and shall include the serial number identifying the component involved, its location, date and time the call was received, nature of trouble, names of the service personnel assigned to the task, instructions describing what has to be done, the amount and nature of the materials to be used, the time and date work started, and the time and date of completion.

1.5.9 System Modifications

Recommendations for system modification shall be submitted in writing. System modifications, including operating parameters and control settings, shall not be made without prior approval of the Government. Any modifications made to the system shall be incorporated into the operations and maintenance manuals, and other documentation affected.

1.5.10 Software

Updates to the software shall be provided for system; operating and application software shall be updated and operation in the system shall be verified. Updates shall be incorporated into operations and maintenance manuals, and software documentation. There shall be at least one scheduled update near the end of the first year's warranty period, at which time the latest released version of the Contractor's software shall be installed and validated.

2 PRODUCTS

2.1 GENERAL EQUIPMENT REQUIREMENTS

Units of the same type of equipment shall be products of a single manufacturer. Each major component of equipment shall have the manufacturer's name and address, and the model and serial number in a conspicuous place. Materials and equipment shall be standard products of a manufacturer regularly engaged in the manufacturing of such products, which are of a similar material, design and workmanship. The standard products shall have been in a satisfactory commercial or industrial use for 2 years prior to use on this project. The 2 years use shall include applications of equipment and materials under similar circumstances and of similar size. The 2 years experience shall be satisfactorily completed by a product which has been sold or is offered for sale on the commercial market through advertisements, manufacturers' catalogs, or brochures. Products having less than a 2 year field service record will be acceptable if a certified record of satisfactory field operation, for not less than 6,000 hours exclusive of the manufacturer's factory tests, can be shown. The equipment items shall be supported by a service organization. Items of the same type and purpose shall be identical, including equipment, assemblies, parts and components. Automatic temperature controls shall be direct digital controls that will provide the required sequence of operation. No pneumatics will be allowed except for valve or damper actuators.

2.1.1 Electrical and Electronic Devices

Electrical, electronic, and electropneumatic devices not located within an HVAC control panel shall have a NEMA ICS 1 enclosure in accordance with NEMA 250 unless otherwise shown. DDC controllers shall be mounted in NEMA,

ventilated, Type 2 enclosures equipped with a hinged cover for easy access. Enclosures shall be sized to provide sufficient maintenance access to installed equipment.

2.1.2 Standard Signals

The signal shall originate from current-sourcing devices and shall be received by current-sinking devices.

2.1.3 Ambient Temperature Limits

DDC panels shall have ambient condition ratings of plus 35 to 120 degrees F and 10 to 95 percent relative humidity, noncondensing. Devices installed outdoors shall operate within limit ratings of minus 35 to 150 degrees F. Instrumentation and control elements shall be rated for continuous operation under the ambient environmental temperature, pressure, humidity, and vibration conditions specified or normally encountered for the installed location.

2.1.4 Surge Protection for Transmitter and Control Wiring

DDC system control-panel equipment shall be protected against surges induced on control and tranmitter wiring installed outside and as shown. The equipment protection shall be tested in the normal mode and in the common mode, using the following two waveforms:

a. A 10 microsecond by 1,000 microsecond waveform with a peak voltage of 1,500 volts and a peak current of 60 amperes.

b. An 8 microsecond by 20 microsecond waveform with a peak voltage of 1,000 volts and a peak current of 500 amperes.

2.1.5 Power-Line Conditioners (PLC)

PLCs shall be furnished for each DDC panel. The PLCs shall provide both voltage regulation and noise rejection. The PLCs shall be of the ferro-resonant design, with no moving parts and no tap switching while electrically isolating the secondary from the power-line side. The PLCs shall be sized for 125 percent of the actual connected kVA load. Characteristics of the PLC shall be as follows:

a. At 85 percent load, the output voltage shall not deviate by more than plus or minus 13 percent of nominal when the input voltage fluctuates between minus 20 percent to plus 10 percent of nominal.

b. During load changes of zero to full load, the output voltage shall not deviate by more than plus or minus 3 percent of nominal. Full correction of load switching disturbances shall be accomplished within 5 cycles, and 95 percent correction shall be accomplished within two cycles of the onset of the disturbance.

c. Total harmonic distortion shall not exceed 3-1/2 percent at full load.

2.1.6 System Accuracy and Display

The system shall maintain an end-to-end accuracy for 1 year from sensor to operator's console display for the applications specified and shall display the value as specified. Each temperature shall be displayed and printed to nearest 0.1 degree F.

2.1.6.1 Space Temperature

Space temperature with a range of 50 to 85 degrees F plus or minus 0.75 degree F for conditioned space; 30 to 130 degrees F plus or minus 1 degree F for unconditioned space.

2.1.6.2 Duct Temperature

Duct temperature with a range of 40 to 140 degrees F plus or minus 2 degrees F.

2.1.6.3 Outside Air Temperature

Outside air (OA) temperature with a range of minus 30 to plus 130 degrees F plus or minus 2 degrees F; with a subrange of 30 to 100 degrees F plus or minus 1 degree F.

2.1.6.4 Water Temperature

Water temperature with a range of 30 to 100 degrees F plus or minus 0.75 degree F; the range of 100 to 250 degrees F plus or minus 2 degrees F; and water temperatures for the purpose of performing Btu calculations using differential temperatures to plus or minus 0.5 degrees F using matched sensors.

2.1.6.5 High Temperature

High temperature with a range of 200 to 500 degrees F plus or minus 2.0 degrees F.

2.1.6.6 Relative Humidity

Relative humidity with a range of 20 to 80 percent plus or minus 6.0 percent of range (display and print to nearest 1.0 percent).

2.1.6.7 Pressure

Pressure with a range for the specific application plus or minus 2.0 percent of range (display and print to nearest psi).

2.1.6.8 Flow

Flow with a range for the specific application plus or minus 3.0 percent of range, and flows for the purpose of thermal calculations to plus or minus 2.0 percent of actual flow (display and print to nearest unit, such as gallons per minute).

2.1.6.9 KWh and kW Demand

KWh and kW demand with a range for the specific application plus or minus 1.0 percent of reading (display and print to nearest kWh or kW).

2.1.6.10 Analog Value Input

An analog value input to the system's equipment via an AI with a maximum error of 0.50 percent of range, not including the sensor or transmitter error. This accuracy shall be maintained over the specified environmental conditions.

2.1.7 Year 2000 Compliance

All microprocessor based equipment and software shall be Year 2000 compliant.

2.2 TUBING

2.2.1 Copper

Copper tubing shall conform to ASTM B 88 and shall have sweat fittings and valves.

2.2.2 Stainless Steel

Stainless steel tubing shall conform to ASTM A 269 and shall have stainless steel compression fittings.

2.2.3 Plastic

Plastic tubing shall have barbed fittings and valves. Plastic tubing shall have the burning characteristics of linear low-density polyethylene tubing, shall be self-extinguishing when tested in accordance with ASTM D 635, shall have UL 94 V-2 flammability classification, and shall withstand stress cracking when tested in accordance with ASTM D 1693. Plastic-tubing bundles shall be provided with Mylar barrier and flame-retardant polyethylene jacket.

2.3 WIRING

2.3.1 Terminal Blocks

Terminal blocks shall be insulated, modular, feed-through, clamp style with recessed captive screw-type clamping mechanism, shall be suitable for rail mounting, and shall have end plates and partition plates for separation or shall have enclosed sides.

2.3.2 Control Wiring for 24-Volt Circuits

Control wiring for 24-volt circuits shall be 18 AWG minimum and shall be rated for 300-volt service.

2.3.3 Wiring for 120-Volt Circuits

Wiring for 120-volt circuits shall be 14 AWG minimum and shall be rated for 600-volt service.

2.3.4 Instrumentation Cable

Instrumentation cable shall be 18 AWG, stranded copper, single- or multiple-twisted, minimum 2 inch lay of twist, 100 percent shielded pairs, and shall have a 300-volt insulation. Each pair shall have a 20 AWG tinned-copper drain wire and individual overall pair insulation. Cables shall have an overall aluminum-polyester or tinned-copper cable-shield tape, overall 20 AWG tinned-copper cable drain wire, and overall cable insulation.

2.4 ACTUATORS

2.4.1 General Requirements

Actuators shall be pneumatic, electric or electronic as shown. Actuators shall fail to their spring-return positions on signal or power failure and shall have a visible position indicator. Actuators shall open or close the devices to which they are applied within 120 seconds after a full scale input signal change. Electric or electronic actuators operating in parallel or in sequence shall have an auxiliary actuator driver. Pneumatic actuators shall be rated for 25 psig operating pressure except for high pressure cylinder type actuators. Actuators shall operate from 24-volt power from the control panel. Modulating valves shall be positive positioning, responding to a 2-10VDC or 4-20mA signal. The actuator shall have the capability of adding auxiliary switches or feedback potentiometer as specified. The actuator shall provide minimum torque required for proper valve or damper close-off. The actuator shall be designed with a current limiting motor protection. A release button-clutch or handle on the actuator shall be provided to allow for manual override (except when actuator is spring return type).

2.4.2 Damper Actuators

The actuators shall be provided with mounting and connecting hardware. Actuators shall smoothly operate the devices to which they are applied. Actuators shall fully open and close the devices to which they are applied and shall have a full stroke response time of 120 seconds or less. The actuator stroke shall be limited by an adjustable stop in the direction of power stroke.

2.4.3 Valve Actuators

Valve actuators shall be selected to provide a minimum of 125 percent of the motive power necessary to operate the valve over its full range of operation.

2.4.4 Positive Positioners

Positive positioners are required for pneumatic actuators. Each positive positioner shall be a pneumatic relay with a mechanical feedback mechanism and an adjustable operating range and starting point.Text

2.5 AUTOMATIC CONTROL VALVES

Valves shall have stainless-steel stems and stuffing boxes with extended necks to clear the piping insulation. Valve bodies shall be designed for not less than 125 psig working pressure or 150 percent of the system

operating pressure, whichever is greater. Valve leakage rating shall be 0.01 percent of rated Cv. Unless otherwise specified, bodies for valves 1-1/2 inch and smaller shall be brass or bronze, with threaded or union ends; bodies for 2 inch valves shall have threaded ends; and bodies for valves 2 inches to 3 inches shall be of brass, bronze or iron. Bodies for valves 2-1/2 inches and larger shall be provided with flanged-end connections. Valve Cv shall be within 100 to 125 percent of the Cv shown.

2.5.1 Butterfly-Valve Assembly

Butterfly valves shall be threaded lug type suitable for dead-end service and modulation to the fully-closed position, with carbon-steel bodies and noncorrosive discs, stainless steel shafts supported by bearings, and EPDM seats suitable for temperatures from 20 to 250 degrees F. Valves shall have a manual means of operation independent of the actuator.

2.5.2 Two-Way Valves

Two-way modulating valves shall have equal-percentage characteristics.

2.5.3 Three-Way Valves

Three-way valves shall provide linear flow control with constant total flow throughout full plug travel.

2.5.4 Duct Coil and Terminal-Unit Coil Valves

Control valves with either flare-type or solder-type ends shall be provided for duct or terminal-unit coils. Flare nuts shall be furnished for each flare-type end valve.

2.5.5 Valves for Chilled Water Service

Internal valve trim shall be bronze except that valve stems may be type 316 stainless steel. Valve Cv shall be within 100 to 125 percent of the Cv shown. Valves 4 inches and larger shall be butterfly.

2.5.6 Valves for Hot Water Service

For hot water service below 250 degrees F and Dual Temperature Service, internal trim (including seats, seat rings, modulating plugs, and springs) of valves controlling water hotter than 210 degrees F shall be Type 316 stainless steel. Internal trim for valves controlling water 210 degrees F or less shall be brass or bronze. Nonmetallic parts of hot-water control valves shall be suitable for a minimum continuous operating temperature shall be suitable for a minimum continuous operating temperature of 250 degrees F or 50 degrees F above the system design temperature, whichever is higher. Valves 4 inches and larger shall be butterfly valves.

2.6 DAMPERS

2.6.1 Damper Assembly

A single damper section shall have blades no longer than 48 inches and shall be no higher than 72 inches. Maximum damper blade width shall be 8 inches. Larger sizes shall be made from a combination of sections. Dampers shall be steel, or other materials where shown. Flat blades shall be made rigid by

folding the edges. Blade-operating linkages shall be within the frame so that blade-connecting devices within the same damper section shall not be located directly in the air stream. Damper axles shall be 0.5 inch minimum, plated steel rods supported in the damper frame by stainless steel or bronze bearings. Blades mounted vertically shall be supported by thrust bearings. Pressure drop through dampers shall not exceed 0.04 inch water gauge at 1,000 feet per minute in the wide-open position. Frames shall not be less than 2 inches in width. Dampers shall be tested in accordance with AMCA 500.

2.6.2 Operating Links

Operating links external to dampers, such as crankarms, connecting rods, and line shafting for transmitting motion from damper actuators to dampers, shall withstand a load equal to at least twice the maximum required damper-operating force. Rod lengths shall be adjustable. Links shall be brass, bronze, zinc-coated steel, or stainless steel. Working parts of joints and clevises shall be brass, bronze, or stainless steel. Adjustments of crankarms shall control the open and closed positions of dampers.

2.6.3 Damper Types

Dampers shall be parallel blade type, unless otherwise indicated.

2.6.3.1 Outside Air, Return Air, and Relief Air Dampers

Outside air, return air and relief air dampers shall be provided where shown. Blades shall have interlocking edges and shall be provided with compressible seals at points of contact. The channel frames of the dampers shall be provided with jamb seals to minimize air leakage. Dampers shall not leak in excess of 20 cfm per square foot at 4 inches water gauge static pressure when closed. Seals shall be suitable for an operating temperature range of minus 40 degrees F to 200 degrees F. Dampers shall be rated at not less than 2,000 feet per minute air velocity.

2.6.3.2 Mechanical and Electrical Space Ventilation Dampers

Mechanical and electrical space ventilation dampers shall be as shown. Dampers shall not leak in excess of 80 cfm per square foot at 4 inches water gauge static pressure when closed. Dampers shall be rated at not less than 1,500 feet per minute air velocity.

2.6.4 Damper End Switches

Each end switch shall be a hermetically sealed switch with a trip lever and over-travel mechanism. The switch enclosure shall be suitable for mounting on the duct exterior and shall permit setting the position of the trip lever that actuates the switch. The trip lever shall be aligned with the damper blade.

2.7 SMOKE DETECTORS

Smoke detectors shall be provided by the Fire Alarm Contractor as specified in Section 16721 FIRE DETECTION AND ALARM SYSTEM.

2.8 INSTRUMENTATION

2.8.1 Measurements

Each transmitter shall have offset and span adjustments. Transmitters shall be calibrated to provide the following measurements, over the indicated ranges:

a. Conditioned space temperature, from 50 to 85 degrees F.

b. Duct temperature, from 40 to 140 degrees F except that return air temperature for economizer operation shall be minus 30 to plus 130 degrees F.

c. Chilled water temperature, from 30 to 100 degrees F.

d. Heating hot water temperature, from 40 to 240 degrees F.

e. Outside air temperature, from minus 30 to plus 130 degrees F.

f. Relative humidity, 0 to 100 percent for high limit applications; from 20 to 80 percent for space applications.

g. Differential pressure for VAV supply duct static pressure from 0 to 2.0 inches water gauge.

h. Pitot tube air flow measurement station and transmitter, from 0 to 0.1 inch water gauge for flow velocities of 500 to 1,200 fpm; 0 to 0.25 inch water gauge for velocities of 500 to 1,800 fpm; or 0 to 0.5 inch water gauge for velocities of 500 to 2,500 fpm.

i. Electronic air flow measurement station and transmitter, from 125 to 2,500 fpm.

2.8.2 Temperature Instruments

2.8.2.1 Thermistors

Precision thermistors shall be used in room or space temperature sensing applications. Sensor accuracy over the application range shall be 0.36 degree F or less between the range of 32 to 150 degrees F. Sensor manufacturer shall utilize 100 percent screening to verify accuracy. Thermistors shall be pre-aged, and inherently stable. Stability error of the thermistor over five years shall not exceed 0.25 degree F cumulative. Sensor element and leads shall be encapsulated. Bead thermistors are not allowed. A/D conversion resolution error shall be kept to 0.1 degree F. Total error for a thermistor circuit shall not exceed 0.5 degree F, which includes sensor error and digital controller A/D conversion resolution error. Provide thermistor and digital controller manufacturer documention and the Contractor's engineering calculations that support the proposed thermistor input circuit will have a total error of 0.5 degree F or less. Provide 18 gage twisted and shield cable for thermistors. Conceal element behind protective cover matched to the room interior.

2.8.2.2 Resistance Temperature Detectors (RTD)

Each RTD shall be platinum with a tolerance of plus or minus 0.1 percent at 32 degrees F, and shall be encapsulated in epoxy, series 300 stainless steel, anodized aluminum, or copper. Each RTD shall be furnished with an RTD transmitter as specified, integrally mounted unless otherwise shown.

2.8.2.3 Continuous Averaging RTD

Continuous averaging RTDs shall have a tolerance of plus or minus 1.0 degree F at the reference temperature, and shall be of sufficient length to ensure that the resistance represents an average over the cross section in which it is installed. The sensing element shall have a bendable copper sheath. Each averaging RTD shall be furnished with an RTD transmitter to match the resistance range of the averaging RTD.

2.8.2.4 RTD Transmitter

The RTD transmitter shall match the resistance range of the RTD. The transmitter shall be a 2-wire, loop powered device. The transmitter shall produce a linear 4-to-20 mAdc output corresponding to the required temperature measurement. The output error shall not exceed 0.1 percent of the calibrated measurement.

2.8.3 Relative Humidity Instruments

Relative humidity sensing element shall have a relative humidity sensing range from 0-100 percent (condensing). The sensor shall be capable of, sensing a condensing air stream (100 percent RH) without affect to the sensors calibration or harm to the sensor. The sensor shall be wall mount type or duct mount type as appropriate and shall be provided with the required accessories. Duct sensors shall be provided with duct probe designed to protect the sensing element from dust accumulation and mechanical damage. Sensing elements shall have an accuracy of plus or minus 5 percent of full scale within the range of 20 to 80 percent relative humidity. A 2-wire, loop powered transmitter located at the sensing element shall be provided to convert the sensing element output to a linear 4-to-20 mAdc output corresponding to the required humidity measurement. The output error shall not exceed 0.1 percent of calibrated measurement.

2.8.4 Electronic Airflow Measurement Stations and Transmitters

2.8.4.1 Stations

Each station shall contain an array of velocity sensing elements and straightening vanes inside a flanged sheet metal casing. The velocity sensing elements shall be of the RTD or thermistor type, with linearizing means. The sensing elements shall be distributed across the duct cross section in the quantity and pattern set forth for measurements and instruments of ASHRAE-03 and SMACNA-07 for the traversing of ducted air flows. The resistance to air flow through the airflow measurement station shall not exceed 0.08 inch water gauge at an airflow of 2,000 fpm. Station construction shall be suitable for operation at airflows of up to 5,000 fpm over a temperature range of 0 to 120 degrees F, and accuracy shall be plus or minus 3 percent over a range of 50 to 2,500 fpm scaled to air volume.

2.8.4.2 Transmitters

Each transmitter shall produce a linear, temperature compensated 4-to-20 mAdc, output corresponding to the required velocity pressure measurement. The transmitter shall be a 2-wire, loop powered device. The output error of the transmitter shall not exceed 0.5 percent of the calibrated measurement.

2.8.5 Differential Pressure Instruments

The instrument shall be a pressure transmitter with an integral sensing element. The instrument over pressure rating shall be 300 percent of the operating pressure. The sensor/transmitter assembly accuracy shall be plus or minus 2 percent of full scale. The transmitter shall be a 2-wire, loop powered device. The transmitter shall produce a linear 4-to-20 mAdc output corresponding to the required pressure measurement.

2.8.6 Thermowells

Thermowells shall be Series 300 stainless steel with threaded brass plug and chain, 2 inch lagging neck and extension type well. Inside diameter and insertion length shall be as required for the application.

2.8.7 Sunshields

Sunshields for outside air temperature sensing elements shall prevent the sun from directly striking the temperature sensing elements. The sunshields shall be provided with adequate ventilation so that the sensing element responds to the ambient temperature of the surroundings. The top of each sunshield shall have a galvanized metal rainshield projecting over the face of the sunshield. The sunshields shall be painted white.

2.8.8 Potential Transformers

Potential transformers shall be in accordance with IEEE C57.13.

2.8.9 Current Transformers

Current transformers shall be in accordance with IEEE C57.13.

2.9 THERMOSTATS

2.9.1 General

Thermostat ranges shall be selected so that the setpoint is adjustable without tools between plus or minus 10 degrees F of the setpoint shown. Thermostats shall be electric or low-voltage electronic.

2.9.2 Freezestats

Freezestats shall be manual reset, low temperature safety thermostats, with NO and NC contacts and a 20 foot element which shall respond to the coldest 18 inch segment. Temperature sensors to provide analog inputs to the DDC systems and function as freeze protection shall be acceptable as freezestats.

2.10 PRESSURE SWITCHES

2.10.1 Pressure Switches

Each switch shall have an adjustable setpoint with visible setpoint scale. Range shall be as shown. Differential adjustment shall span 20 to 40 percent of the range of the device.

2.10.2 Differential Pressure Switches

Each switch shall be an adjustable diaphragm-operated device with two SPDT contacts, with taps for sensing lines to be connected to duct pressure fittings designed to sense air pressure. These fittings shall be of the angled-tip type with tips pointing into the air stream. Range shall be 5.0 to 6.0 inches water gauge. Differential shall be a maximum of 0.15 inch water gauge at the low end of the range and 0.35 inch water gauge at the high end of the range.

2.11 INDICATING DEVICES

2.11.1 Insertion Thermometers

Thermometers for insertion in ductwork and piping systems shall have brass, malleable iron, or aluminum alloy case and frame, clear protective face, permanently stabilized glass tube with indicating-fluid column, white face, black numbers, and a 9 inch length. Thermometers for piping systems shall have rigid stems with straight, angular, or inclined pattern, and shall conform to ASME PTC 19.3.

2.11.2 Thermometer Stems

Thermometer stems shall have expansion heads as required to prevent breakage at extreme temperatures. On rigid-stem thermometers, the space between bulb and stem shall be filled with a heat-transfer medium.

2.11.3 Air Duct Thermometers

Air duct thermometers shall have perforated stem guards and 45 degree adjustable duct flanges with locking mechanism.

2.11.4 Averaging Thermometers

Averaging thermometers shall have 3-1/2 inch (nominal) dial, with black legend on white background, and pointer traveling through a 270 degree arc.

2.11.5 Accuracy

Thermometers shall have an accuracy of plus or minus 1 percent of scale range. Thermometers shall have the following ranges:

a. Mixed air, return air, cooling-coil discharge, chilled water, condenser water, and glycol cooling temperatures: 0 to 100 degrees F in 1 degree graduations.

b. Heating-coil discharge temperature: 30 to 180 degrees F in 2 degree graduations.

c. Hydronic heating systems below 220 degrees F: 40 to 240 degrees F in 2 degree graduations.

d. Glycol heatin service temperature: 40 to 240 degrees F in 2 degree graduations.

e. High temperature hot water: 100 to 550 degrees F in 5 degree graduations.

2.11.6 Pressure Gauges

Gauges shall be 2 inch (nominal) size, back connected, suitable for field or panel mounting as required, shall have black legend on white background, and shall have a pointer traveling through a 270 degree arc. Accuracy shall be plus or minus 3 percent of scale range. Gauges shall meet requirements of ASME B40.1.

2.11.6.1 Pneumatic Actuator Gauges

Gauges for indicating signal output to pneumatic actuators shall have an outer scale of 3 to 15 psig in 1 psi graduations.

2.11.6.2 Air Storage Tank and Filter and Dryer Gauge

Gauges for air storage tanks, and gauge for use before and after dirt and oil filters or dryers, shall have a scale of 0 to 160 psig with 2 psi graduations.

2.11.6.3 Hydronic System Gauges

Gauges for hydronic system applications shall have ranges and graduations as shown.

2.11.6.4 Low-Differential Pressure Gauges

Gauges for low-differential pressure measurements shall be a minimum of 3-1/2 inch (nominal) size with two sets of pressure taps, and shall have a diaphragm-actuated pointer, white dial with black figures, and pointer zero adjustment. Gauges shall have ranges and graduations as shown. Accuracy shall be plus or minus 2 percent of scale range.

2.12 RELAYS

2.12.1 Control Relays

Control relay contacts shall have utilization category and ratings selected for the application, with a minimum of two sets of contacts (two normally open, two normally closed) enclosed in a dustproof enclosure. Relays shall be rated for a minimum life of one million operations. Operating time shall be 20 milliseconds or less. Relays shall be equipped with coil transient suppression devices to limit transients to 150 percent of rated coil voltage. Time delay relays shall be 2 PDT with 8-pin connectors, dust cover, and a matching rail mounted socket. Adjustable timing range shall be 0 to 3 minutes. Power consumption shall not be greater than 3 watts.

2.12.2 Current Sensing Relays

Current sensing relays shall be of a design that provides a normally-open (NO) single-pole, single-throw (SPST) contact rated at a minimum of 50 volts peak and one-half amp or 25 VA, noninductive. Current sensing relays shall be single unit construction with provisions for firm mounting. They shall have a single hole for passage of current carrying conductors and sized for operation at a nominal 50 percent of current rating of sensed device. The Contractor shall use multiple turns of sensed leads for higher rated loads, voltage isolation shall be for a minimum of 600 volts.

2.13 UTILITY METERS

2.13.1 Electrical Watthour Meters

Watthour meters shall be as specified in Section 16415 ELECTRICAL WORK, INTERIOR.

2.13.2 Water Meters

Water meters shall be as specified in Section 15400 PLUMBING, GENERAL PURPOSE and shall be connected for remote monitoring through the Energy Management Central Station.

2.13.3 Gas Meters

Gas meters shall be as specified in Section 02685 GAS DISTRIBUTION SYSTEM and shall be connected for remote monitoring through the Energy Management Central Station.

2.14 FIELD HARDWARE

2.14.1 Direct Digital Control (DDC) Panel Hardware

DDC panels shall be microcomputer based with sufficient memory to perform specified DDC panel functions and operations. The panel shall be sized to accommodate the number of I/O functions required, plus 10 percent expansion for each type of I/O function. The panel shall not be dependent on logic or data from an external computer. The panel shall contain necessary I/O functions to connect to field sensors and control devices. The DDC panel shall include:

a. Main power switch.

b. Power on indicator.

c. Portable tester connector.

d. Software menus on portable tester/computer shall provide functions of On-Off-Auto switches for each digital output and Auto-Manual switches with manual potentiometer, for each analog output.

2.14.1.1 General

The controller shall be capable of deciding strategies for the system based on information from any objects in the system regardless if the object is directly monitored by the controller or by another controller. The program

that implements these strategies shall be completely flexible and user definable. Any systems utilizing factory pre-programmed strategies that cannot be modified by field personnel on-site or downloaded via remote communications are not acceptable. Changing strategies via firmware changes may be accepted for small package units provided that all operating parameters are changeable through the DDC system. Program execution at controller shall be a minimum of once per second.

2.14.1.2 Controller Programming

Controller programming shall be object-oriented using control program blocks. Documentation in flowchart form for all programming shall be provided as part of the final system as-built documentation. Samples of flowchart documentation shall be included in submittals. All flowcharts shall be generated and automatically downloaded to controller. No reentry of database information shall be necessary.

2.14.1.3 Memory

The controller shall have a memory sufficient to provide a record of all possible trend log requested, meter readings, and I/O functions for two months. Battery shall retain static RAM memory and clock functions for a minimum of 1 year. Battery shall be a field-replaceable (non-rechargeable) lithium type. Automatic charging of batteries shall be provided. A low battery alarm with indication for each controller shall be provided.

2.14.1.4 Electrical Service Outlet for use with Test Equipment

A single phase, 120 Vac electrical service outlet for use with test equipment shall be furnished either inside or within 6 feet of the DDC panel enclosure.

2.14.1.5 Locking Type Mounting Cabinets

Locking type mounting cabinets, with common keying and door switch wired to and DDC panel input for intrusion alarm annunciation, shall be furnished.

2.14.1.6 Failure Mode

Upon failure of the DDC panel, all connected points shall be forced to the failure mode shown in the I/O summary tables.

2.14.1.7 Portable Tester

Provisions for connection of a portable tester shall be furnished at each DDC panel location.

2.14.1.8 I/O Functions

I/O functions shall be provided as part of the DDC panel and shall be in accordance with the following:

a. The Analog Input (AI) function shall monitor each analog input, perform A-to-D conversion, and hold the digital value in a buffer for interrogation. The A-to-D conversion shall have a minimum resolution of 10 bits plus sign. Signal conditioning shall be provided for each analog input. Analog inputs shall be

individually calibrated for zero and span, in hardware or in software. The AI shall incorporate common mode noise rejection of 50 dB from 0 to 100 Hz for differential inputs, and normal mode noise rejection of 20 dB at 60 Hz from a source impedance of 10,000 ohms.

b. The Analog Output (AO) function shall accept digital data, perform D-to-A conversion, and output a signal. D-to-A conversion shall have a minimum resolution of 8 bits plus sign. Analog outputs shall be individually calibrated for zero and span. Short circuit protection on voltage outputs and open circuit protection on current outputs shall be provided. An individual gradual switch for manual override of each analog output and means of physically securing access to these switches shall be provided. Each AO shall have a three-position switch for selection of the DDC control signal, no control, or a locally generated control signal for connection to the controlled device. Feedback shall be provided to the system as to the status of the output (manual control or automatic). Switches for pneumatic control outputs shall provide a connection for an externally generated pneumatic signal. All switches shall be either of a key operated design with the same keying system used for other outputs or otherwise suitably protected from unauthorized access.

c. The Digital Input (DI) function shall accept on-off, open-close, or other change of state (two state data) indications. Isolation and protection against an applied steady-state voltage up to 180 Vac peak shall be provided.

d. The Digital Output (DO) function shall provide contact closures for momentary and maintained operation of output devices. Closures shall have a minimum duration of 0.1 second. DO relays shall have an initial breakdown voltage between contacts and coil of at least 500 V peak. Electromagnetic interference suppression shall be furnished on all output lines to limit transients to nondamaging levels. Protection against an applied steady-state voltage up to 180 Vac peak shall be provided. Minimum contact rating shall be 1 ampere at 24 Vac. Key locked HOA switches shall be provided for manual override of each digital output. Feedback shall be provided to the system as to the status of the output (manual control or automatic). All switches shall be common keyed.

e. The pulse accumulator function shall have the same characteristics as the DI. In addition, a buffer shall be provided to totalize pulses and allow for interrogation by the DDC panel. The pulse accumulator shall accept rates up to 20 pulses per second. The totalized value shall be reset to zero upon operator's command.

f. Signal conditioning for sensors shall be provided as specified.

2.14.2 Variable Air Volume (VAV) Terminal Unit Controls

The VAV terminal units shall be as specified in Section 15895 AIR SUPPPLY, DISTRIBUTION, VENTILATION AND EXHAUST SYSTEM. Terminal unit controls shall consist of individual box controllers which shall be fully interfaced to the control system through dedicated DDC panels. VAV terminal box controllers

shall be interfaced to the system through the DDC panel that controls the AHU serving that box.

2.14.2.1 Box Control Device

Controls for pressure independent boxes shall consist of a velocity-sensing device in the primary air entering the box, a room temperature sensing element, a damper actuator, and an adjustable microprocessor-based VAV box controller. Each controller shall operate a damper for cooling and a duct coil for heating. Actuator shall open or close the device to which it is applied within 6 minutes. Terminal unit controls shall meet the requirements of UL 916 and 47 CFR 15.

Controls for pressure independent boxes with recirculating fans shall consist of a velocity-sensing device in the primary air entering the box, a room temperature sensing element, an adjustable microprocessor-based VAV box controller, a damper with actuator, and a duct pressure switch to operate the recirculation fan. Each controller shall operate the damper for cooling and the recirculation fan and duct coil for heating.

Each VAV box controller shall have a provision for occupancy sensing overrides. Based upon the contact status of either a manual wall switch or an occupancy sensing device, the VAV box controller shall automatically select either an economy or a comfort mode.

VAV box controllers shall provide an auxiliary binary output to serve as the interface to an associated lighting relay. Based upon the status of either an occupancy sensing device or a manual wall switch, the VAV box controller shall provide a contact output to automatically turn on or off lights. Power and associated transformers, as needed, shall be provided from the nearest lighting circuit to the VAV box controller. All monitoring and control parameters shall be monitored, changed and stored in the DDC system. VAV controllers shall be networked and appear with the same characteristics as DDC modules, including monitoring and changes through the Maintenance Computer.

2.14.2.2 Communication and Programming Device

The DDC Portable Tester/Computer specified below shall function as the maintenance, communication and programming device and shall connect to the controller directly. It shall be used to read and set minimum velocity, maximum velocity, heating setpoint, and cooling setpoint, and to read velocity and space temperature. It shall also provide portable client access to the system.

2.14.3 Maintenance Computer

Provide a Personal Computer at project site for use as the facility maintenance terminal and the building Energy Management interface for command entry, information management, network alarm management, and database management functions. All real-time control functions shall be resident in the Stand alone DDC Panels. Maintenance Computer shall be provided with sufficient memory and processor capacity to perform all functions described in this specification. Provide sufficient hard drive disk storage to accommodate all fully configured point data bases, all application databases, all graphics data bases, all user-defined reports, and all historical data archives as described in this specification. System

shall be able to support two times the initial point installation without system performance degradation. Computer shall be Windows NT certified. As a minimum, the following shall be provided:

a. Pentium processor @ 200 MHz (or higher)
   32 MB RAM
   Minimum of (1) diskette drive (1.44 MB, 3.5-inch)
   1 CD-ROM drive
   Hard disk drive with a minimum of 2 GB
   Microsoft Windows NT operating system
   10/100 Ethernet Adapter Network card
   Bus mouse or equal (compatible with Windows NT)
   SVGA video card with 2 MB RAM
   Keyboard

b. Super VGA 15-inch color monitor, 1280 x 1024 pixels minimum resolution, 256 colors)

c. Provide power line surge protector.

d. PC shall be equipped with Ethernet card, connected to Government furnished RJ-45 to communicate with the existing Energy Management Central Station.

e. Mount in locking cabinet.

f. PC shall include sound card and speakers.

2.14.4 Building 555 Existing Energy Management Central Station

The existing central station is located in Building 555. The existing central station utilizes Microsoft Windows NT as an operating system. Software and/or hardware furnished for the central station shall operate under Windows NT, Windows NT’s Application Program Interfaces (APIs), and the latest Windows NT revisions.

2.14.5 DDC Panel Test Set

A DDC panel test set, consisting of a DDC panel and I/O simulator, shall be provided for use, located as shown, connected via a separate data transmission media (DTM) circuit. The I/O simulator shall manually generate the values or status for all I/O functions specified. The I/O simulator shall receive, display, and send different types of signals. Cables, connectors, test jacks, controls, indicators, and equipment required to simulate the I/O sensors and control devices and display the operation of all types of DDC panels used by the system shall be included. Indicators and controls shall be installed in a control panel. Test jacks for input and output signal of the I/O simulator shall be front panel mounted for use in diagnostics and evaluation. The I/O functions mix, including indicators and controls, shall be at least:

a. 4 AI.

b. 4 AO.

c. 16 DI

d. 16 DO.

e. 2 pulse accumulator inputs.

f. One each of any other type utilized in the system.

2.14.6 Building Occupant Interface

Communication and programming devices, with instruction manuals, shall be provided at locations indicated. Each communication and programming device shall be used by the building occupant to perform certain low access level actions such as resetting heating setpoint and cooling setpoint, turning on and off fan systems, and reading space temperature. Devices shall be user-friendly and menu driven with keypad.

2.14.7 Communication Equipment

The DDC panel shall be equipped with hardware to allow for communication over Data Transmission Media (DTM) using the communication network as shown.

2.14.8 Modem

Modem shall be suitable for direct wire line connection to existing US Robotics Courier V.Everthing/V.34 modem. Communication shall be at 33.6Kbps.

2.15 COMMUNICATION

The master DDC panels shall be equipped with software drivers and handlers which allow for communication with the existing Energy Management Central Station through the maintenance computer. The software drivers shall allow for communications via modems, line drivers, transmitters/receivers over LAN, wirelines, fiber optic or coaxial cables. The software shall be structured to support communication over a network with star, ring, radial, or a combination of topologies. Each communication program module shall be functionally independent of other Contractor-furnished software, to allow for future upgrade or replacement of communication modules without affecting other application programs and other software modules. Communications shall be TCP/IP over the base communication network.

2.15.1 Between the DDC Modules and DDC Master Controller

Communications between the DDC modules and DDC master controller shall be direct wired as specified in paragraph “DDC LAN wiring”. When DDC components are available from the manufacture which support DCOM, Active X or equivalent, they shall be selected and used by the contractor for intranet connection with the facility Maintenance Computer. Complete details of protocol shall be identified in the documentation provided by the contractor.

2.15.2 Between the DDC Master Controller and the Maintenance Computer

Data communicated between the DDC master controller and the Maintenance Computer shall conform to BACnet. ASHRAE-Std.135 shall apply to database format. Data communication frames and format does not require BACnet (Communications methods shall be as specified in paragraph “Live DDC Data Exchange.”

2.15.3 Between the Maintenance Computer and the Energy Management Central Server

Communications between the Maintenance Computer and the Energy Management Central Server shall be TCP/IP over existing base communications lines.

2.16 COMPUTER SOFTWARE INTERFACE

2.16.1 Direct Digital Controllers

The programming of DDC modules shall require only the use of simple, standardized commands. These commands and their input requirement shall be "user friendly". Each DDC panel, shall contain an operating system that controls and schedules that DDC panel's activities in real time. The DDC panel shall maintain a point database in its RAM that includes all parameters, constraints, and the latest value or status of all points connected to that DDC panel. The operating system shall include a real time clock function that maintains the seconds, minutes, hours, date and month, including day of the week. The operating system shall allow local loading of software and data files from the portable tester/computer and from the maintenance computer or central station.

2.16.1.1 Command Priorities

A scheme of priority levels shall be provided to prevent interaction of a command of low priority with a command of higher priority. The system shall require the latest highest priority command addressed to a single point to be stored for a period of time longer than the longest time constraint in the on and off states, ensuring that the correct command will be issued when the time constraint is no longer in effect or report the rejected command. Override command entered by the operator shall have higher priority than those emanating from application programs.

2.16.1.2 DDC Panel Startup

The DDC panel shall have startup software that causes automatic commencement of operation without human intervention, including startup of all connected I/O functions. A DDC panel restart program based on detection of power failure at the DDC panel shall be included in the DDC panel software. Upon restoration of power to the DDC panel, the program shall restart all equipment and restore all loads to the state at time of power failure, or to the state as commanded by time programs or other overriding programs. The restart program shall include start time delays between successive commands to prevent demand surges or overload trips. The startup software shall initiate operation of self-test diagnostic routines. Upon failure of the DDC panel and if the database and application software are no longer resident, or if the clock cannot be read, the DDC panel shall not restart and systems shall remain in the failure mode until the necessary repairs are made. If the database and application programs are resident, the DDC panel shall resume operation after an adjustable time delay of from 0 to 600 seconds. The startup sequence for each DDC panel shall include a unique time delay setting when system operation is initiated.

2.16.1.3 DDC Panel Operating Mode

Each DDC panel shall control and monitor all functions independent of communication with any other source. The software shall perform DDC panel functions and DDC panel resident application programs using data obtained from I/O functions and based upon the DDC panel real time clock function. The DDC panel software shall execute commands after performing constraint checks in the DDC panel.

2.16.1.4 DDC Panel Failure Mode

Upon failure for any reason, the system shall perform an orderly shutdown and force all DDC panel outputs to a predetermined state, consistent with the failure modes defined in the I/O summary tables and the associated controlled devices.

2.16.1.5 DDC Panel Functions

Software necessary to accomplish the following functions, as appropriate, fully implemented and operational, within the DDC panel shall be provided:

a. Scanning of inputs.

b. Control of outputs.

c. Store alarms for reporting when requested.

d. Maintain real time.

e. Execute DDC panel resident application programs.

f. Averaging or filtering of each analog input.

g. Constraint checks, prior to command issuance.

h. DDC panel diagnostics.

2.16.1.6 Analog Monitoring

The DDC panel shall measure analog values and shall be capable of transmitting analog values for display. An analog change in value is defined as a change exceeding a preset differential value as specified. Displays and reports shall express analog values in proper engineering units with polarity sign. The system shall accommodate up to 255 different sets of engineering unit conversions. Each engineering unit conversion shall include range, span, and conversion equation.

2.16.1.7 Logic (Virtual) Points

Logic (virtual) points shall be software points entered in the point database which are not directly associated with a physical I/O function. This value shall be created by calculating it from any combination of digital and analog points, or other data. Logic points shall be analog or digital points having all the properties of real points, including alarms, without the associated hardware. Logic points shall be defined or calculated and entered into the database by the Contractor as required. The calculated analog point shall have point identification in the same format

as any other analog point. The calculated point shall be used in any program where the real value is not obtainable directly. Calculated point values shall be current for use by the system within 30 seconds of the time any input value changes and shall include:

a. Control loop setpoints.

b. Control loop gain constants.

c. Control loop integral constants.

d. Summer/winter operation.

e. Real time.

f. Scheduled on/off times.

g. Equipment run-time targets.

h. Calculated point values.

2.16.1.8 I/O Point Definition

Each I/O point shall be defined in a database in the DDC panel. The definition shall include all physical parameters and constraints associated with each point.

2.16.1.9 Parameter Definition

Each I/O point shall be defined and entered into the database by the Contractor, including as applicable:

a. Name.

b. Device or sensor type (i.e., sensor, control, motors).

c. Point identifications number.

d. Area.

e. Sensor range.

f. Controller range.

g. Sensor span.

h. Controller span.

i. Engineering units conversion (scale factor).

j. High and low reasonableness value (analog).

k. High and low alarm limit (analog).

l. High and low alarm limit differential (return to normal).

m. Analog change differential (for reporting).

n. High accumulator limit (pulse).

o. Status description (digital inputs).

2.16.1.10 Alarm Processing

Each DDC panel shall have alarm processing software for digital, analog, and pulse accumulator alarms for all input and virtual points connected to that DDC panel.

2.16.1.11 Digital Alarms Definition

Digital alarms are those abnormal conditions indicated by digital inputs as specified in the I/O Summary Tables and elsewhere.

3 ANALOG ALARMS DEFINITION

Analog alarms are those conditions higher or lower than a defined value, as measured by an analog input as specified in the I/O Summary Tables and elsewhere. Analog readings shall be compared to predefined high and low limits, and alarmed each time a value enters or returns from a limit condition. Unique high and low limits shall be assigned to each analog point in the system. Analog alarm limits shall be stored in the DDC panel database. Each analog alarm limit shall have an associated unique limit differential specifying the amount by which a variable must return to the proper operating range before being declared as a return-to-normal state. Limits and differentials shall be entered on line by the operator in limits or the measured variable, without interruption or loss of monitoring of the point concerned.

3.1.1.1 Pulse Accumulator Alarms Definition

Pulse accumulator alarms are those conditions calculated from totalized values of accumulator inputs or pulse accumulator inputs rates that are outside defined limits as specified in the I/O Summary Tables and elsewhere. Pulse accumulator totalized values shall be compared to predefined limits and alarmed each time a value enters a limit condition. Unique limits shall be assigned to each pulse accumulator point in the system. Limits shall be stored in the DDC panel database.

3.1.1.2 Equipment Constraints Definitions

Each control point in the database shall have DDC panel resident constraints defined and entered by the Contractor, including as applicable:

a. Minimum off time.

b. Minimum on time.

c. High limit (value in engineering units).

d. Low limit (value in engineering units).

4 CONSTRAINT CHECKS

Control devices connected to the system shall have the DDC panel memory resident constraints checked before each command is issued to ensure that no equipment damage will result from improper operation. Each command shall be executed by the DDC panel only after all constraint checks have been passed. Each command point shall have unique constraints assigned. High and low "reasonableness" values or one differential "rate-of-change" value shall be assigned to each analog input. Values outside the reasonableness limits shall be rejected and an alarm generated. Status changes and analog point values shall be reported upon request, such as for reports, and application programs. Each individual point shall be capable of being selectively disabled by the operator. Disabling a point shall prohibit monitoring and automatic control of that point.

4.1.1.1 DDC Panel Diagnostics

Each DDC panel shall have self-test diagnostic routines implemented in firmware. The tests shall include routines that exercise memory. Diagnostic software shall be provided for use in the portable tester. The software shall display messages in plain language to inform the tester's operator of diagnosed problems.

4.1.2 Summer/Winter Operation Monitoring

The system shall provide software to change the operating parameters, monitoring of alarm limits, and start-stop schedules for each mechanical system where such a change from summer to winter and vice versa is meaningful. The software shall provide commands to application programs to coordinate summer or winter operation.

4.1.3 Control Sequences and Control Loops

Operator commands shall be used to create and execute control sequences and control loops for automated control of equipment based on operational parameters including times and events, defined in the database. Through the command entry device, the system shall prompt the operator for information necessary to create, modify, list, and delete control sequences and Proportional-plus-Integral-plus Derivative (PID) control loops. The system shall prompt the operator for confirmation that the control sequence and control loop addition/modification/deletion is correct, prior to placing it in operation. Mathematic functions required shall be available for use in creating the control sequences and control loops. Sufficient spare memory shall be provided to allow four control sequences and four control loops in addition to those necessary to implement the requirements specified for each DDC panel. Each control sequence shall accommodate up to eight terms or devices.

4.1.3.1 Control Functions

The DDC panel shall provide the following control functions:

a. PID Control: The system shall provide for PID control. The control algorithm intended for use shall be submitted for approval with a full explanation of its functions and limitations. A determination shall be made of the anti-windup limit for the DDC

panel software (for example, an anti-windup limit of plus/minus one half of the actuator range).

b. Two Position Control: This function shall provide control for two state device control by comparing a setpoint against a process variable and an established deadband.

c. Floating Point Control: This function shall exercise control when an error signal exceeds a selected deadband, and shall maintain control until the error is within the deadband limits.

d. Signal Selection: This function shall allow the selection of the highest or lowest analog value from a group of analog values as the basis of control. The function shall include the ability to cascade analog values so that large numbers of inputs, up to a maximum of 20, can be reduced to one or two outputs.

e. Reset Function: This function shall develop an analog output based on up to two analog inputs and one operator specified reset schedule.

f. Self Tuning: The controller shall provide self tuning operation to proportional, integral and derivative modes of control and shall modify the mode constants as required.

4.1.3.2 DDC Panel Resident Applications Software

Application software required to achieve the sequences of operation, parameters, constraints, and interlocks necessary to provide control of the systems connected to the DDC system shall be provided. Application software shall be resident and executing in the DDC panel, and shall be coordinated to ensure that no conflicts or contentions remain unresolved. The following Program software shall be provided in addition to that required elsewhere:

a. Time of Day Scheduling

b. Calendar Based Scheduling

c. Holiday Scheduling

d. Temporary Schedule Overrides

e. Optimal Start

f. Optimal Stop

g. Night Setback Control

h. Enthalpy or Dry bulb Switch over (Economizer)

i. Peak Demand Limiting

j. Duty Cycling

k. Fan Speed/CFM Control

l. Heating/Cooling Interlock

m. Hot Water Reset

n. Chilled Water Reset

o. Condenser Water Reset

p. Chiller Sequencing

q. Boiler Sequencing

r. Enthalpy Control

s. Lighting Controls Interface

t. Power Monitoring Interface

u. Night Purge

v. Load Reset

Application software shall allow option to include automatic time adjustment and program settings for daylight savings time.

4.1.4 Operator Commands

The interface to each DDC controller, panel and system shall allow the operator to perform commands including, but not limited to, the following:

a. Start up or shutdown selected equipment

b. Adjust setpoints

c. Add/Modify/Delete time programming

d. Enable/Disable process execution

e. Lock/Unlock alarm reporting for each point

f. Enable/Disable Totalization for each point

g. Enable/Disable Trending for each point

h. Override PID Loop setpoints

i. Enter temporary override schedules

j. Define Holiday Schedules

k. Change time/date

l. Enter/Modify analog alarm limits

m. Enter/Modify analog warning limits

n. View limits

o. Enable/Disable Demand Limiting for each meter

p. Enable/Disable Duty Cycle for each load

4.1.5 Maintenance Computer

4.1.5.1 Command Entry/Menu Selection Process

Maintenance computer and central station interface software shall minimize operator training through the use of English language prompting, English language point identification, and industry standard PC application software.

4.1.5.2 Graphical and Text-Based Displays

Maintenance computer, client computers and central station shall provide consistent graphical or text-based displays of all system point and application data described in this specification. Point identification, engineering units, status indication, and application naming conventions shall be the same at all operator devices.

4.1.5.3 Multiple, Concurrent Displays

The Operator Interface shall provide the ability to simultaneously view several different types of system displays in a windowing environment to speed building operation and analysis. For example, the interface shall provide the ability to simultaneously display a graphic depicting an air handling unit, while displaying the trend graph of several associated space temperatures to allow the user to analyze system performance. Maintenance terminal functions and client workstation functions shall be displayable at the same time.

4.1.5.4 Logs and Summaries

Reports shall be generated automatically or manually, and directed to either CRT displays, printers, or disk files. As a minimum, the system shall allow the user to easily obtain the following types of reports:

a. A general listing of all points in the network

b. List all points currently in alarm

c. List of all off line points

d. List all points currently in override status

e. List of all disabled points

f. List all points currently locked out

g. List of all items defined in a "Follow-Up" file

h. List all Weekly Schedules

i. List all Holiday Programming

j. List of Limits and Deadbands

Summaries shall be provided for specific points, for a logical point group, for a user selected group of groups, or for the entire facility without restriction due to the hardware configuration of the DDC. Under no conditions shall the operator need to specify the address of hardware controller to obtain system information.

4.1.5.5 Trendlog Information

a. System shall periodically gather historically recorded selected samples of object data stored in the field equipment and archive the information. Archived files shall be appended with new sample data, allowing samples to be accumulated over several years. Systems that write over archived data shall not be allowed, unless limited file size is specified. Samples may be viewed at the terminal in a trendlog. Logged data shall be stored in SQL format. Client workstation operator shall be able to scroll through all trendlog data. System shall automatically open archive files as needed to display archived data when operator scrolls through the data vertically. All trendlog information shall be displayed in standard engineering units.

b. Software shall be included that is capable of graphing the trend logged object data. Software shall be capable of creating two-axis (x,y) graphs that display up to six object types at the same time in different colors. Graphs shall show object type value relative to time.

c. The user shall be able to change trend log setup information as well. This includes the information to be logged as well as the interval at which it is to be logged. All input, output, and value object types in the system may be logged. All operations shall be password protected. Setup and viewing may be accessed directly from any and all graphics object is displayed on.

4.1.5.6 Energy Log Information

a. System shall periodically gather energy log data stored in the field equipment and archive the information. Archive files shall be appended with the new data, allowing data to be accumulated over several years. Systems that write over archived data shall not be allowed unless limited file size is specified. Samples may be viewed at the terminal in an energy log. Logged data shall be stored in SQL format. Client workstation operator shall be able to scroll through all energy log data. System shall automatically open archive files as needed to display archived data when operator scrolls through the data. Display all energy log information in standard engineering units.

b. System software shall be provided that is capable of graphing the energy log data. Software shall be capable of creating two-axis (x,y) graphs that display up to six object types at the same time in different colors. Graphs shall show object type value relative to time. Operation of system shall not be affected by this operation. In other words, it shall stay completely online.

c. The user shall be able to change the energy log setup information as well. This includes the meters to be logged, meter pulse value, and the type of energy units to be logged. All meters monitored by the system may be logged. All operations shall be password protected.

4.1.6 Third Party Interface

System data, including transactions, alarms, Totalization files, etc., shall be stored on the workstation disk drive in a SQL database. Format of the information shall comply with BACnet standard as extensions to existing tables, queries, forms, reports, macros, modules, etc. The database program shall acquire and store and process data at full resolution and integrate real-time and historic data with configuration, event, and summary data. The SQL data program shall be fully integrated with Microsoft Back Office products and shall be managed by Microsoft’s SQL Server Enterprise Manager and Client Configuration Utility.

4.1.7 Database Save/Restore/Back Up

Back up copies of all standalone DDC panel databases shall be stored at the maintenance computer and central station. Continuous supervision of the integrity of all DDC panel databases shall be provided. In the event that any DDC panel on the network experiences a loss of its data base for any reason, the system shall automatically download a new copy of the respective data base to restore proper operation. Data base back up/Download shall occur over the local area network without operator intervention. Users shall also have the ability to manually execute downloads of any or all portions of a DDC panels database.

4.1.8 Client Computers

4.1.8.1 Dynamic Color Graphic Displays

a. Color graphic floor plan displays, and

b. System schematics (for each piece of mechanical equipment; including air handling units, chilled water systems, and steam and hot water heating systems,) shall be provided as a part of this contract.

4.1.8.2 System Selection/Penetration

The operator interface shall allow users to access the various system schematics and floor plans via a graphical penetration scheme, menu selection.

4.1.8.3 Dynamic Data Displays

Dynamic temperature values, humidity values, flow values, and status indication shall be shown in their actual respective locations, and shall automatically update to represent current conditions without operator intervention.

4.1.8.4 Windowing

The windowing environment of the maintenance computer and central station shall allow the user to simultaneously view several graphics at the same time to analyze total building operation, or to allow the display of a graphic associated with an alarm to be viewed without interrupting work in progress.

4.1.9 System Configuration and Definition

All temperature and equipment control strategies and energy management routines shall be definable by the operator. System definition and modification procedures shall not interfere with normal system operation and control.

4.1.9.1 Operator Functions

The system shall be provided complete with all equipment and documentation necessary to allow an operator to independently perform the following functions. However the system shall support limiting of access and user rights in accordance with the ‘NT domain user rights policies’.

a. Add/Delete/Modify Standalone DDC Panels

b. Add/Delete/Modify Operator Workstations

c. Add/Delete/Modify Application Specific Controllers

d. Add/Delete/Modify points of any type, and all associated point parameters, and tuning constants

e. Add/Delete/Modify alarm reporting definition for each point

f. Add/Delete/Modify control loops

g. Add/Delete/Modify energy management applications

h. Add/Delete/Modify time and calendar based programming

i. Add/Delete/Modify Totalization for every point

j. Add/Delete/Modify Historical Data Trending for every point

k. Add/Delete/Modify custom control processes

l. Add/Delete/Modify any and all graphic displays, symbols, and cross references to point data

m. Add/Delete/Modify dial up telecommunication definition

n. Add/Delete/Modify all operator passwords

o. Add/Delete/Modify Alarm Messages

4.1.9.2 Programming Description

Definition of operator device characteristics, DDC panels, individual points, applications and control sequences shall be performed through fill in the blank templates and graphical programming approach.
Graphical programming shall allow the user to define the software configuration of DDC control logic for HVAC system control sequences, fan interlocks, pump interlocks, PID control loops, and other control relationships through the creation of graphical logic flow diagrams.

a. Graphical Programming: Control sequences are created by using a mouse input device to draw interconnecting lines between symbols depicting inputs, operators (comparisons and mathematical calculations), and outputs of a control sequence. As a minimum, graphic symbols shall be used to represent:

Process Inputs, such as temperature, humidity, or pressure values, status, time, date, or any other measured or calculated system data.

Mathematical Process Operators, such as addition, subtraction, multiplication, or greater than, equal to, less than, etc.

Logical Process Operators such as AND, OR, Exclusive OR, NOT, etc.

Time Delays

Process Control Outputs such start/stop control points, analog adjust points, etc.

Process Calculation Outputs

Text file Outputs and Advisories

b. Network Wide Strategy Development: Inputs and outputs for any process shall not be restricted to a single DDC panel, but shall be able to include data from any and all other DDC panels to allow the development of network wide control strategies. Processes shall also allow the operator to use the results of one process as the input to any number of other processes (cascading).

c. Sequence Testing and Simulation: A software tool shall be provided, which allows a user to simulate control sequence execution to test strategies before they are actually applied to mechanical systems. Users shall be able to enter hypothetical input data, and verify desired control response and calculation results via graphical displays and hardcopy printouts.

4.1.9.3 System Definition/Control Sequence Documentation

All portions of system definition shall be self documenting to provide hardcopy printouts of all configuration and application data. Control process and DDC control loop documentation shall be provided in logical, graphical flow diagram format to allow control sequences to be easily interpreted and modified at any time in the future.

4.1.10 Central Server

4.1.10.1 Graphics Definition Package

Graphic generation software shall be provided to allow the user to add, modify, or delete system graphic displays. The terminal's software shall accept Windows BITMAP (*.bmp) format graphic files for display purposes. Graphic files shall be created using scanned, full color photographs of system installation, AutoCAD drawing files of field installation drawings and wiring diagrams from as-built drawings.

a. The contractor shall provide libraries of pre-engineered screens and symbols depicting standard air handling unit components (e.g. fans, cooling coils, filters, dampers, etc.), complete mechanical systems (e.g. constant volume-terminal reheat, VAV, etc.) and electrical symbols.

b. The graphic development package shall use a mouse or similar pointing device in conjunction with a drawing program to allow the user to perform the following:
   Define symbols
   Position and size symbols
   Define background screens
   Define connecting lines and curves
   Locate, orient and size descriptive text
   Define and display colors for all elements
   Establish correlation between symbols or text and associated system points or other displays.

c. System shall be capable of displaying graphic file, text, and dynamic object data together on each display. Information shall be labeled with descriptors and shall be shown with the appropriate engineering units. All information on any display shall be dynamically updated without any action by the user. Terminal shall allow user to change all field-resident Energy Management Central Station functions associated with the project, such as setpoints, weekly schedules, exception schedules, etc. from any screen no matter if that screen shows all text or a complete graphic display. This shall be done without any reference to object addresses or other numeric/mnemonic indications.

d. All displays shall be generated and customized in such a manner by the local contractor that they fit the project as specified. Canned displays shall not be acceptable. Displays shall use standard English for labeling and readout. Systems requiring factory programming for graphics or DDC logic are specifically prohibited. All graphics and DDC programming shall be supported locally by the installing contractor without factory dependency or assistance.

e. Binary objects shall be displayed as ON/OFF/NULL or with customized text. Text shall be justified left, right or center as selected by the user. Also, allow binary objects to be displayed as individual change-of-state bitmap objects on the display screen such that they overlay the system graphic. Each binary object displayed in this manner shall be assigned up to three bitmap files for display when the point is ON, OFF or in alarm. For binary outputs, toggle the

object's commanded status when the bitmap is selected with the system digitizer (mouse). Similarly, allow the terminal operator to toggle the object's status by selecting (with the mouse) a picture of a switch or light, for example, which then displays a different picture (such as an "ON" switch or lighted lamp). Additionally, allow binary objects to be displayed as an animated graphic.

f. Analog objects shall be displayed with operator modifiable units. Analog input objects may also be displayed as individual bitmap items on the display screen as an overlay to the system graphic. Each analog input object may be assigned to a minimum of five bitmap files, each with high/low limits for automatic selection and display of the bitmaps. As an example, a graphic representation of a thermometer would rise and fall in response to either the room temperature or its deviation from the controlling setpoint. Analog output objects, when selected with the mouse, shall be displayed as a prompted dialog (text only) box. Selection for display type shall be individual for each object. Analog object values may be changed by selecting either the "increase" or "decrease" arrow in the analog object spinner box without using the keypad. Pressing the button on the right side of the analog object spinner box allows direct entry of an analog value and accesses various menus where the analog value may be used, such as trendlogs.

g. Analog objects may also be assigned to an area of a system graphic, where the color of the defined area would change based on the analog object's value. For example, an area of a floor-plan graphic served by a single control zone would change color with respect to the temperature of the zone or its deviation from setpoint. All editing and area assignment shall be created or modified online using simple icon tools.

h. A customized menu label (push-button) shall be used for display selection. Menu items on a display shall allow penetration to lower level displays or additional menus. Dynamic point information and menu label push buttons may be mixed on the same display to allow sub-displays to exist for each item. Each display may be protected from viewing unless operator has appropriate security level. A separate security level may be assigned to each display and system object.

4.1.10.2 Databases

Central database shall be accomplished as SQL data and extensions to existing tables, queries, forms, reports, macros, modules, etc. Data shall be located at the facility Maintenance Computer and/or at the Energy Management Central Server as applicable for the information. In addition to the database entries required elsewhere, a complete central SQL database of all information shall be accomplished by the contractor.

4.1.10.3 Flowcharts

Documentation in flowchart form for all programming shall be provided as part of the final system as-built documentation. Flowcharts shall be generated automatically from the DDC programming. System shall be self documenting.

4.1.10.4 Alarms

Server client organization shall accomplish the following:

a. Operator shall be provided audible, visual, and printed means of alarm indication. The alarm dialog box shall always become the top dialog box regardless of the application(s), currently running (such as a word processor). Printout of alarms shall be sent to the assigned terminal and port.

b. System shall provide log of alarm messages. Alarm log shall be archived to a hard disk . Each entry shall include a description of the event-initiating object generating the alarm, time and date of alarm occurrence, time and date of object state return to normal, and time and date of alarm acknowledgment.

c. Alarm messages shall be in user-definable text (English or other specified language) and shall be entered either at the client terminal or the central server.

4.2 SYSTEM SOFTWARE OPERATION

a. Software shall be consistent throughout the system. Software used for direct maintenance operation of the facility shall be the same in the laptop computer and in the maintenance computer. Software used for client operation of the system shall be the same for laptop, maintenance computer and other client workstations. Software used for services and background functions shall be the same for the maintenance computer and the central server.

b. Live DDC Data Exchange through DCOM, COM+, JAVA or Active X distributed applications shall be used to provide the data communications exchange with the DDC panels. The user shall have the ability to “link” the computer programs directly to live, real-time DDC data values. It is permissible to use an interface conforming to Microsoft Corporation’s Dynamic Data Exchange (DDE) protocols and standards to interface to off-the-shelf personal computer software programs (e.g., Microsoft Word for Windows, Microsoft Excel, Lotus, etc.) Systems that offer data exchange using only historical, disk resident information will not be acceptable. DDC data value “reads” and “writes” shall both be permissible.

c. Client software must be installed on all real property client workstations in the system. All real property client workstations use Windows NT (workstation or server) as part of the EMCS domain or as separate domains trusted by the EMCS domain.

d. Server software must be installed on the backup server. Compete instructions and final installation onto the primary server shall be accomplished at completion of the project.

e. DDC and workstation software packages must be managed with System Management Server and be downloaded from the central using the functions for management and system operation incorporated in the Management Server package.

4.2.1 Portable Laptop Computer

Computer shall be loaded with DDC manufacturer’s software to function as a command entry device to each DDC panel and component.

4.2.1.1 Client Network Access

Computer shall be loaded with necessary software to function as a client workstation as described for client computers.

4.2.2 Maintenance Computer

Computer shall provide access to the DDC system in the facility through the manufacturer’s DDC network installed to the master DDC controller for the facility.

4.2.2.1 Maintenance Terminal Functions

All functions described for the Laptop Computer shall be provided for the maintenance worker at the facility by the Maintenance Terminal functions of the computer.

4.2.2.2 Facility Information Server

Computer shall provide interface to the Energy Management Central System through the base communication network. All conversions and interface operations shall run in the background as services without obstruction to other tasks being performed at the facility.

4.2.2.3 Client Workstation

Computer shall provide client access to the facility and other facilities from server applications on other computers. Functions are as described for client computers.

4.2.2.4 Maintenance computer startup

The computer shall have startup software that causes automatic commencement of operation without human intervention, including startup of all connected communication functions. Upon restoration of power to the computer, the programs shall restart all communications and restore all programs into operations.

4.2.3 Client Computers

Client computers shall be loaded with client installations of server applications to monitor and maintain the facilities DDC and energy management system.

4.2.3.1 Loading of Software

All client software shall be installed, revised and updated by down line loading from the domain management server. Microsoft System Management Server will be used for this function.

4.2.3.2 Browser Extensions

Extensions to find and correlate information about the system shall be provided. Interactive actions with web servers shall provide client abilities to create, store and recall user views of information; automatic data updates, mixing and matching of data formats from the data sources and provide compatibility to Microsoft’s Active Desktop.

4.2.4 Central Server

4.2.4.1 Internet/Intranet Information

Extensions to the existing Internet Information Server shall be implemented to provide real time process information and graphics on the base intranet. Dynamic HTML and JAVA pages shall be used to provide publishing of information allowing standard browsers to access real time information, reports and actions of the DDC and energy management systems. Limitations to access shall be via the NT domain user rights.

4.2.4.2 Programming Tools

a. Provide means for the user to display and change system configuration. This shall include, but not be limited to, system time, day of the week, date of daylight savings set forward/set back, printer termination, port addresses, modem port and speed, etc. Items shall be modified using understandable terminology with simple mouse/cursor key movements.

b. Provide software tools that display as-built drawings supplied on disk with system. As-built drawing viewer shall as a minimum display AutoCAD (*.dwg) files and all other drawing types supplied on disk. User shall be able to display drawings with no degradation in system performance or operation. As-built drawings may be displayed while real-time data is shown and updated on screen along with as-built drawings.

c. The system shall include programming tools for all controllers supplied. All controllers shall be programmed using graphical tools that allow the user to connect function blocks on screen that provide sequencing of all control logic. Function blocks shall be represented by graphical displays that are easily identified and distinct from different types of blocks. Graphical programming that uses simple rectangles and squares is not acceptable.

d. The user shall be able to pick graphical function block from menu and place on screen. Programming tools shall place lines connecting appropriate function blocks together automatically. Provide zoom in and zoom out capabilities. Function blocks shall be downloaded to controller without any reentry of data.

e. Programming tools shall include a test mode. Test mode shall show user real-time data on top of graphical display of selected function blocks. Data shall be updated real-time with no interaction by the user. Function blocks shall be animated to show status of data inputs and outputs. Animation shall show change of status on logic devices and countdown of timer devices in graphical format.

4.2.4.3 Additional Central Functions

In addition to requirements stated elsewhere, the Central Station (Bldg. 555) software shall provide server functions to include Alarm Indication, Trendlog Information, Energy Log Information, and means to modify configuration and setup, including programming tools to modify facilities' DDC controllers; client applications; server applications and all site specific programs.

4.2.4.4 Other Software

Existing software on the computers used by the contractor must remain and be in the same condition after the contractors work as when the contractor starts.

4.2.5 Licenses

Software licenses shall cover all computers used with the system. Hardware keys or dongles are not acceptable for clients or servers. Software used over the system shall be provided with site license for the system.

4.2.6 System Time Clock

4.2.6.1 System Time

Master clock server program shall automatically update its time on a selectable schedule from master time sources via the internet.

4.2.6.2 Server Time Clock

Contractor shall install a master clock server program on the EMCS server at building 555. Program shall operate as a network service to provide system master time to the facility computers.

4.2.6.3 Maintenance Computer Time Clock

Time on maintenance computer shall be automatically updated at least once per day from the network master clock.

4.2.6.4 Client Workstation Time Clock

Time on client workstations shall be automatically updated from the network master clock. Time clock client shall run as a service to update the workstation time from the network master clock.

4.3 APPLICATION PROGRAMS

4.3.1 General

4.3.1.1 System Functions

The system shall perform functions specified in the I/O summary tables by use of the appropriate applications programs. Applications programs shall be coordinated, one with the other, to ensure that no conflicts or contentions remain unresolved. The specified application programs shall be

coordinated with the existing equipment and controls operation, and other requirements as shown.

4.3.1.2 Program Inputs

Appropriate program inputs shall be selected for each application program to calculate the required program outputs. Where the specific program inputs are not available, such as no status indication called for on the I/O summary table, a default value shall be provided to replace the missing input, thus allowing the application program to be tested. Analog inputs to applications programs shall have an operator adjustable deadband to preclude short cycling or hunting.

4.3.2 Scheduled Start-Stop Program

This program shall start and stop equipment based on a time of day schedule for each day of the week, and on a holiday schedule. To eliminate power surges, an operator adjustable time delay shall be provided between consecutive start commands.

4.3.2.1 Program Inputs

a. Day of week/holiday.

b. Time of day.

c. Summer and winter high-low alarm limits.

d. Summer and winter start-stop schedules.

e. Summer or winter operation.

f. Equipment status.

g. Equipment constraints.

4.3.2.2 Program Outputs

a. Start signal.

b. Stop signal.

4.3.3 Optimum Start-Stop Program

HVAC equipment which is required to be started and stopped based on a time schedule shall be subject to this program. This program shall start and stop equipment as specified for the scheduled start-stop program, but shall include a sliding schedule based on indoor and outdoor air conditions. The program shall take into account the thermal characteristics of the structure, indoor and OA conditions using prediction software to determine the minimum time of HVAC system operation needed to satisfy space environmental requirements at the start of the occupied cycle, and determine the earliest time for stopping equipment at the day's end without allowing the space environmental conditions to drift out of the range specified for the occupied cycle before the start of the unoccupied cycle.

4.3.3.1 Program Inputs

a. Day of week/holiday.

b. Time of day.

c. Summer or winter operation.

d. Equipment status.

e. Summer and winter building occupancy schedules.

f. Space temperature(s).

g. Building heating constant (operator adjustable).

h. Building cooling constant (operator adjustable).

i. OA temperature.

j. Required space temperature at occupancy (heating).

k. Required space temperature at occupancy (cooling).

l. Equipment constraints.

m. Summer and winter high-low alarm limits.

4.3.3.2 Program Outputs

a. Start signal.

b. Stop signal.

4.3.4 Duty Cycling Program

This program shall shutdown equipment for predetermined periods of time during building occupied hours. Nominal off-times shall be decreased if space comfort temperature conditions are not satisfied, or increased if space comfort temperature conditions remain satisfied.

4.3.4.1 Program Inputs

a. Equipment status.

b. Space temperatures.

c. Maximum temperature during occupied periods (cooling season).

d. Minimum temperature during occupied periods (heating season).

e. Equipment on-off cycle interval.

f. Equipment constraints.

g. Summer or winter operation.

4.3.4.2 Program Outputs

a. Start signal.

b. Stop signal.

4.3.5 Demand Limiting Program

This program shall utilize the sliding window interval method for shedding electrical loads to prevent exceeding an electrical demand peak value (target). The program shall continuously monitor power demand, and with prediction software, calculate a predicted power demand. When the predicted power demand exceeds a preset desired target, the program shall shut off electrical loads on a prescheduled priority basis to reduce the connected load before the actual peak exceeds the target. The peak demand value shall be calculated at a minimum of 1-minute intervals.

4.3.5.1 Priority Levels of Loads

The demand limiting program shall provide eight priority levels of loads. Loads in the lowest priority level shall be shed before loads in the next higher priority level. Loads shed within a priority level shall be rotated automatically, subject to equipment constraints, to avoid any one load from always being shed first. Loads shed first within a priority level shall be restored first. Loads shed in the highest priority level shall be restored before loads in lower priority levels.

4.3.5.2 Compatibility with Time-of-Day Metering

The demand program shall be compatible with future time-of-day metering. The program shall permit a minimum of six individually definable time-of-day demand periods in 24 hours.

4.3.5.3 Program Inputs

a. Day of week/holiday.

b. Time of day.

c. Equipment status.

d. Peak demand limit target.

e. Equipment priority schedules.

f. Length of sliding window interval.

g. Demand.

h. Maximum space temperature during occupied periods (cooling season).

i. Minimum space temperature during occupied periods (heating season).

j. Space temperatures.

k. Equipment constraints.

l. Summer and winter operation.

4.3.5.4 Program Outputs

a. Start signal.

b. Stop signal.

4.3.6 Economizer Program

As indicated.

4.3.7 Ventilation-Recirculation Program

The software shall reduce the HVAC system thermal load during warm-up or cool-down cycles prior to occupancy of the building and during day/night setback operations. The OA damper shall remain closed for warm-up and cool-down cycles occurring during day-night setback periods. During summer cool-down cycle operation, when the OA temperature is cooler than the space temperature, the OA and exhaust air dampers shall be allowed to open. During winter warm-up cycle operation, when the OA temperature is warmer than space temperature, the OA and exhaust air dampers shall be allowed to open. The OA damper and exhaust air damper shall be closed during the unoccupied mode at all other times.

4.3.7.1 Program Inputs

a. Day of week.

b. Time of day.

c. Summer or winter operation.

d. Equipment status.

e. Summer and winter occupancy schedules.

f. OA dry bulb temperature.

f. Length of sliding window interval.

g. Space temperature.

h. Equipment constraints.

4.4 MAINTENANCE SUPPORT

4.4.1 Integrated Instructions and Documentation

Provide on line clear step by step maintenance and repair procedures. Provide help button for detailed information on each menu, text, graphics or video format. Include test procedures and automated test procedures to isolate and identify problems. Probable causes and documented procedures for alarm conditions shall be included with alarm displays.

4.4.2 Client Programs and Files

Hypertext links to documentation, data and procedures shall be included in the client displays. Client applications and/or browsers shall allow direct access to the maintenance information available from the servers.

4.4.3 Server Programs and Files

The Energy Management Central Servers shall provide the host services and web server functions for on line maintenance information. Provide on line detailed schematics photos and instructions to simplify testing and repair. All O&M manual information shall be also available on line. Multimedia information about equipment, troubleshooting, and support information shall be incorporated.

4.4.4 Maintenance Computer

Facility specific information shall reside at the building’s Maintenance Computer. It shall be shared for server access and publishing to clients. A back up copy shall be recorded at the central server for archive and download in the event of loss.

4.5 WIRE AND CABLE

4.5.1 Digital Functions

Control wiring for digital functions shall be 18 AWG minimum with 600-volt insulation. Multiconductor wire shall have an outer jacket of polyvinyl chloride (PVC).

4.5.2 Analog Functions

Control wiring for analog functions shall be 18 AWG minimum with 600-volt insulation, twisted and shielded, 2-, 3-, or 4-wire to match analog function hardware. Multiconductor wire shall have an outer jacket of PVC.

4.5.3 Sensor Wiring

Sensor wiring shall be 20 AWG minimum twisted and shielded, two-, three-, or four-wire to match analog function hardware. Multiconductor wire shall have an outer jacket of PVC.

4.5.4 Class 2 Low Energy Conductors

The conductor sizes specified for digital and analog functions shall take precedence over any requirements for Class 2 low energy remote-controlled and signal-circuit conductors specified elsewhere.

4.5.5 DDC LAN Wiring

All DDC communications wiring (such as between DDC modules; between DDC and Maintenance Computer; and between Maintenance Computer and the Government furnished wall jack) shall be CAT 5 wiring as described in Specification Section 16710 PREMISES DISTRIBUTION SYSTEM. Wiring and connections shall be established to support future intranet communications within the facility.

4.6 VARIABLE SPEED DRIVES

Provide variable torque UL listed variable speed drives designed to convert 3 phase, 60 Hertz input power to adjustable voltage and frequency, 3 phase AC power for stepless motor control from 10 percent to 110 percent of base speed. Unit shall be capable of starting, stopping and driving an AC variable output from 0-60 HZ, maintaining a constant volts/Hertz ratio. Volts/Hertz ratio shall be adjustable via a keypad. Sized as required by the scheduled motors. Provide in NEMA 1 surface mounted metal enclosures with lockable hinged front door and top or bottom conduit entry. Speed control shall be via a signal from the DDC system. Total harmonic distortion, less than 3 percent per IEEE Std. 519.

4.6.1 Features

a. Input rectifier section to supply fixed DC bus voltage.

b. Phase-to-Phase and Phase-to-Ground MOV protection.

c. Smoothing reactor to the DC bus.

d. DC bus capacitors

e. Sine weighted PWM generating invertor section.

f. Separate terminal blocks for control and power wiring.

g. Internal control power circuit with transformer and protective fuses.

h. Meet or exceed the current ratings listed on NEC table 430-150 for the motor being controlled.

i. UL listed for electronic overload protection of the motor.

j. Provide drive with 3 percent line reactors.

k. Motor noise as a result of the drive limited to 3 dB over the line operation, measured at 3 feet from the motor. If deemed too noisy by the Owner, replace unit.

l. Programmable relay contacts SPDT (not open collector). Minimum of 3 sets.

m. Adjustable acceleration and deceleration, commonly or separately, from 10 to 75 seconds with torque override acceleration protection and regeneration protection during deceleration.

n. Automatic adjustment of the volts to Hertz ratio in the motor in proportion to its load without changing speed.

o. Separately adjustable minimum/maximum frequency limits.

p. Low frequency/low voltage start with linear adjustable ramp up to pre-selected speed.

q. Power light on door.

r. Thru-the-door operator interface with keypad and alphanumeric display for parameter setting and monitoring of:

1. Frequency
2. RPM
3. Output voltage
4. Output current
5. Running time
6. Faults (including memory of last 3 received faults)
7. Display to read in English words without the use of codes
8. Parameters shall be set via keypad without removing the driver cover

s. Auxiliary relay contact for remote fault indication

t. Manual speed setting dial on door

u. Hand-off-auto switch on door. In hand position, the speed is controlled by the door mounted speed pot. In off position, the drive cannot be started. In auto position, the speed is controlled by a remote signal and the drive can receive a remote start command. The stop command in the auto position can be either remote or from the door mounted HOA selector.

v. Controller lockable in open position.

w. Overtemperature shutdown.

x. Input power dip ride through, 500 milliseconds.

y. Output short circuit and ground fault protection.

z. Start into spinning motor protection. Motor may be turning in either directon.

aa. Automatic restart after power interruption and after power decay (brownout). Automatic restart shall be a feature selectable via the software.

bb. Signal follower shall accept 0-10 VDC and 4-20mA inputs, direct and reverse acting behind the reactor.

cc. Critical frequency range lockout; minimum of 2 critical frequency ranges.

dd. RFI/EMI filters.

4.6.2 Operating Conditions

a. Displacement power factor of 0.95 or better at any speed on load.

b. Drive central efficiency 95 percent or better at rated load and frequency.

c. AC line frequency variation: plus 2 Hz.

d. AC line voltage variation: minus 10 percent to plus 10 percent.

e. Capacity 100 percent continuous, 110 percent for a duration of 60 sec. (10 percent overload).

f. Input power to the drive shall be limited to 110 percent of the motor load as derived from NEC table 430-150.

4.6.3 Maintenance Bypass

a. Bypass: Provide manually switched, full voltage contactors to isolate the drive unit and power the load directly from the line. Provide Drive-Off-Bypass selector switch and status lights. Provide contact closure to indicate "DRIVE ON BYPASS" to building system controls.

b. Bypass contactors shall have suitable overload protection in each leg.

c. Bypass system shall provide capability to disconnect drive from power source for maintenance while in the bypass mode.

4.6.4 Overcurrent Protection

Furnish with input line overcurrent protective device; thermal magnetic type, externally operated and interlocked with enclosure door with short circuit interrupting rating of 65,000 amps.

4.7 FIELD HARDWARE

4.7.1 Direct Digital Control (DDC) Panel Hardware

4.7.1.1 Failure Mode

Upon failure of the DDC panel, all connected points shall be forced to the failure mode shown in the I/O summary tables.

4.7.1.2 Portable Tester

Provisions for connection of a portable tester shall be furnished at each DDC panel and zone sensor location.

4.7.1.3 I/O Functions

I/O functions shall be provided as part of the DDC panel and shall be in accordance with the following:

a. The Analog Input (AI) function shall monitor each analog input, perform A-to-D conversion, and hold the digital value in a buffer for interrogation. The A-to-D conversion shall have a minimum resolution of 10 bits plus sign. Signal conditioning shall be provided for each analog input. Analog inputs shall be individually calibrated for zero and span, in hardware or in software. The AI shall incorporate common mode noise rejection of 50 dB from 0 to 100 Hz for differential inputs, and normal mode noise rejection of 20 dB at 60 Hz from a source impedance of 10,000 ohms. Input ranges shall be within the range of 4-to-20 mAdc.

b. The Analog Output (AO) function shall accept digital data, perform D-to-A conversion, and output a signal within the range of 4-to-20 mAdc. D-to-A conversion shall have a minimum resolution of 8 bits plus sign. Analog outputs shall be individually calibrated for zero and span. Short circuit protection on voltage outputs and open circuit protection on current outputs shall be provided. An individual gradual switch for manual override of each analog output and means of physically securing access to these switches shall be provided.

c. The Digital Input (DI) function shall accept on-off, open-close, or other change of state (two state data) indications. Isolation and protection against an applied steady-state voltage up to 180 Vac peak shall be provided.

d. The Digital Output (DO) function shall provide contact closures for momentary and maintained operation of output devices. Closures shall have a minimum duration of 0.1 second. DO relays shall have an initial breakdown voltage between contacts and coil of at least 500 V peak. Electromagnetic interference suppression shall be furnished on all output lines to limit transients to nondamaging levels. Protection against an applied steady-state voltage up to 180 Vac peak shall be provided. Minimum contact rating shall be 1 ampere at 24 Vac.

e. The pulse accumulator function shall have the same characteristics as the DI. In addition, a buffer shall be provided to totalize pulses and allow for interrogation by the DDC panel. The pulse accumulator shall accept rates up to 20 pulses per second. The totalized value shall be reset to zero upon operator's command.

f. Signal conditioning for sensors shall be provided as specified.

5 EXECUTION

5.1 GENERAL INSTALLATION CRITERIA

5.1.1 HVAC Control System

The HVAC control system shall be completely installed and ready for operation. Dielectric isolation shall be provided where dissimilar metals are used for connection and support. Penetrations through and mounting holes in the building exterior shall be made watertight. The HVAC control system installation shall provide clearance for control system maintenance by maintaining access space between coils, access space to mixed-air plenums, and other access space required to calibrate, remove, repair, or replace control system devices. The control system installation shall not interfere with the clearance requirements for mechanical and electrical system maintenance.

5.1.2 Software Installation

Software shall be loaded for an operational system, including databases for all points, operational parameters, and system, command, and application software. The Contractor shall provide original and backup copies of source, excluding the general purpose operating systems and utility programs furnished by computer manufacturers and the non-job-specific proprietary

code furnished by the system manufacturer, and object modules for all software on each type of media utilized, within 30 days of formal Government acceptance. In addition, a copy of individual floppy disks of all software for each DDC panel shall be provided. All DDC software shall be loaded to the DDC modules, controllers, DDC panels, etc. via the Maintenance Computer through the Maintenance Terminal software. All changes to parameters, data files, schedules and programs shall be through the system client software package on the Maintenance Computer.

5.1.2.1 Central Station Software Installation

Contractor will not be allowed to install software directly onto the existing operation system; Contractor shall install software to the backup server. Contractor will make an emergency repair disk prior to installing any software. After verification of proper operation of the complete system, Contractor shall provide directions, and floppy or CD copies of the software for government installation on to the active server. Project will not be complete until full operation on the primary active server is complete.

5.1.3 Device-Mounting Criteria

Devices mounted in or on piping or ductwork, on building surfaces, in mechanical/electrical spaces, or in occupied space ceilings shall be installed in accordance with manufacturer's recommendations and as shown. Control devices to be installed in piping and ductwork shall be provided with all required gaskets, flanges, thermal compounds, insulation, piping, fittings, and manual valves for shutoff, equalization, purging, and calibration. Strap-on temperature sensing elements shall not be used except as specified.

5.1.4 Wiring Criteria

Wiring external to control panels, including low-voltage wiring, shall be installed in metallic raceways. Wiring shall be installed without splices between control devices and DDC panels. Instrumentation grounding shall be installed as necessary to prevent ground loops, noise, and surges from adversely affecting operation of the system. Cables and conductor wires shall be tagged at both ends, with the identifier shown on the shop drawings, in accordance with the requirements of Section 16415 ELECTRICAL WORK, INTERIOR. Other electrical work shall be as specified in Section 16415 ELECTRICAL WORK, INTERIOR and as shown.

5.2 CONTROL-SYSTEM INSTALLATION

5.2.1 Damper Actuators

Actuators shall not be mounted in the air stream. Multiple actuators operating a common damper shall be connected to a common drive shaft. Actuators shall be installed so that their action shall seal the damper to the extent required to maintain leakage at or below the specified rate and shall move the blades smoothly.

5.2.2 Local Gauges for Actuators

Pneumatic actuators shall have an accessible and visible receiver gauge installed in the tubing lines at the actuator as shown.

5.2.3 Room-Instrument Mounting

Room instruments shall be mounted so that their sensing elements are 5 feet above the finished floor unless otherwise shown. Temperature setpoint device shall be recess mounted.

5.2.4 Freezestats

For each 20 square feet of coil-face area, or fraction thereof, a freezestat shall be provided to sense the temperature at the location shown. Manual reset freezestats shall be installed in approved, accessible locations where they can be reset easily. Freeze sensors shall be manually resettable through the software. The sensing element shall be installed in a serpentine pattern.

5.2.5 Averaging-Temperature Sensing Elements

Sensing elements shall have a total element minimum length equal to 1 foot per square foot of duct cross-sectional area.

5.2.6 Duct Static-Pressure Sensing Elements and Transmitters

The duct static-pressure sensing element and transmitter sensing point shall be located approximately two-thirds of the distance from the supply fan to the end of the duct with the greatest pressure drop.

5.2.7 Indication Devices Installed in Piping and Liquid Systems

Gauges in piping systems subject to pulsation shall have snubbers. Gauges for steam service shall have pigtail fittings with cock. Thermometers and temperature sensing elements installed in liquid systems shall be installed in thermowells.

5.3 CONTROL SEQUENCES OF OPERATION

As indicated.

5.4 COMMISSIONING PROCEDURES

5.4.1 Evaluations

The Contractor shall make the observations, adjustments, calibrations, measurements, and tests of the control systems, set the time schedule, and make any necessary control-system corrections to ensure that the systems function as described in the sequence of operation.

5.4.1.1 Item Check

Signal levels shall be recorded for the extreme positions of each controlled device. An item-by-item check of the sequence of operation requirement shall be performed using Steps 1 through 4 in the specified control system commissioning procedures. Steps 1, 2, and 3 shall be performed with the HVAC system shut down; Step 4 shall be performed after the HVAC systems have been started. External input signals to the DDC panel (such as starter auxiliary contacts, and external systems) may be simulated in steps 1, 2,

and 3. With each operational-mode signal change, DDC panel output relay contacts shall be observed to ensure that they function.

5.4.1.2 Weather-Dependent Test Procedures

Weather-dependent test procedures that cannot be performed by simulation shall be performed in the appropriate climatic season. When simulation is used, the actual results shall be verified in the appropriate season.

5.4.1.3 Two-Point Accuracy Check

A two-point accuracy check of the calibration of each HVAC control system sensing element and transmitter shall be performed by comparing the DDC panel readout to the actual value of the variable measured at the sensing element and transmitter or airflow measurement station location. Digital indicating test instruments shall be used, such as digital thermometers, motor-driven psychrometers, and tachometers. The test instruments shall be at least twice as accurate as the specified sensing element-to-DDC panel readout accuracy. The calibration of the test instruments shall be traceable to National Institute Of Standards And Technology standards. The first check point shall be with the HVAC system in the shutdown condition, and the second check point shall be with the HVAC system in an operational condition. Calibration checks shall verify that the sensing element-to-DDC panel readout accuracies at two points are within the specified product accuracy tolerances. If not, the device shall be recalibrated or replaced and the calibration check repeated.

5.4.1.4 Insertion and Immersion Temperatures

Insertion temperature and immersion temperature sensing elements and transmitter-to-DDC panel readout calibration accuracy shall be checked at one physical location along the axis of the sensing element.

5.4.1.5 Averaging Temperature

Averaging-temperature sensing element and transmitter-to-DDC panel readout calibration accuracy shall be checked every 2 feet along the axis of the sensing element in the proximity of the sensing element, for a maximum of 10 readings. These readings shall then be averaged.

5.4.2 Space Temperature Controlled Perimeter Radiation

The heating medium shall be turned on, and the thermostat temperature setpoint shall be raised. The valve shall open. The thermostat temperature shall be lowered and the valve shall close. The thermostat shall be set at the setpoint shown.

5.4.3 Unit Heater

The "OFF/AUTO" switch shall be placed in the "OFF" position. Each space-thermostat temperature setting shall be turned up so that it makes contact and turns on the unit heater fans. The unit heater fans shall not start. The "OFF/AUTO" switch shall be placed in the "AUTO" position. It shall be ensured that the unit-heater fans start. Each control loop temperature setting shall be turned down, and the unit-heater fans shall stop. The DDC controllers shall be set at their temperature setpoints. The results of testing of one of each type of unit shall be logged.

5.4.4 Single Building Hydronic Heating with Hot Water Boiler

Steps for installation shall be as follows:

a. Step 1 - System Inspection: The HVAC system shall be observed in its shutdown condition. It shall be verified that power is available where required.

b. Step 2 - Calibration Accuracy Check with HVAC System Shutdown: Readings shall be taken with a digital thermometer at each temperature-sensing element location. Each temperature shall be read at the DDC panel, and the thermometer and DDC panel readings logged. The calibration accuracy of the sensing element-to-DDC panel readout for outside air temperature and system supply temperature shall be checked.

c. Step 3 - Actuator Range Adjustments: A signal shall be applied to the actuator through an operator entered value to the DDC panel. The proper operation of the actuators and positioners for all valves shall be verified visually. The signal shall be varied from live zero to full range, and it shall be verified that the actuators travel from zero stroke to full stroke within the signal range. It shall be verified that all sequenced actuators move from zero stroke to full stroke in the proper direction, and move the connected device in the proper direction from one extreme position to the other.

d. Step 4 - Control-System Commissioning:

(1) The two-point calibration sensing element-to-DDC panel readout accuracy check for the outside air temperature shall be performed. Any necessary software adjustments to setpoints or parameters shall be made to achieve the outside air temperature schedule.

(2) The outside air temperature shall be simulated through an operator entered value to signify a call for heating off. It shall be verified that pumps HWP-1, HWP-2, BCP-1, and BCP-2 and boilers B-1 and B-2 stop. A value shall be entered to simulate that the outside air temperature is below the setpoint as shown. It shall be verified that pumps HWP-1, HWP-2, BCP-1, and BCP-2 start and boilers B-1 and B-2 operate.

(3) The two-point calibration accuracy check of the sensing element-to-DDC panel readout for the system-supply temperature shall be performed. The system-supply temperature setpoint shall be set for the temperature schedule as shown. Signals of 8 ma and 16 ma shall be sent to the DDC panel from the outside air temperature sensor, to verify that the system-supply temperature setpoint changes to the appropriate values.

(4) The system shall be placed in the occupied mode. The calibration accuracy check of sensing element-to-DDC panel readout for each space temperature shall be performed, and the values logged. The setpoint shall be set for 70 degrees F at midrange, 55 degrees F at the low end, and 85 degrees F at the high end. The system shall be placed in the unoccupied-mode and it shall be

verified that the space temperature setpoint changes to the unoccupied mode setting.

5.4.5 Chilled Water System

Steps for installation shall be as follows:

a. Step 1 - System Inspection: The chilled water system shall be observed in its shutdown condition. The system shall be checked to see that power is available where required, and that the pumps are off and chilled water control valves are closed.

b. Step 2 - Calibration Accuracy Check with Chilled Water System Shutdown: Readings shall be taken with a digital thermometer at each temperature sensing element location. Each temperature shall be read at the DDC panel, and the thermometer and DDC panel readings logged. The calibration accuracy of the sensing element-to-DDC panel readout for outside air temperature, system supply temperature, and system return temperature shall be checked.

c. Step 3 - Actuator Range Adjustments: A signal shall be applied to the actuator through an operator entered value to the DDC panel. The proper operation of the actuators and positioners for all valves shall be visually verified. The signal shall be varied from live zero to full range, and it shall be verified that the actuators travel from zero stroke to full stroke within the signal range. It shall be verified that all sequenced actuators move from zero stroke to full stroke in the proper direction, and move the connected device in the proper direction from one extreme position to the other.

d. Step 4 - Control-System Commissioning:

(1) The two-point calibration sensing element-to-DDC panel readout accuracy check for the outside air temperature shall be performed. Any necessary software adjustments shall be made to setpoints or parameters to achieve the outside air temperature schedule.

(2) The system shall be indexed to the cooling mode and it shall be verified that the chiller and pump start and the control valves come under control.

(3) The signal from the flow switch shall be interrupted. It shall be verified that the chiller stops.

(4) The DDC system shall simulate a condition in which no cooling is required. It shall be verified that the chilled water pump stops and the chiller is off.

5.4.6 Heating and Ventilating

Steps for installation are as follows:

a. Step 1 - System Inspection: The HVAC system shall be observed in its shutdown condition. The system shall be checked to see that power and main air are available where required, the outside air

damper and relief air damper are closed, and the return air damper is open.

b. Step 2 - Calibration Accuracy Check with HVAC System Shutdown: Readings shall be taken with a digital thermometer at each temperature- sensing element location. Each temperature shall be read at the DDC panel, and the thermometer and DDC panel readings logged. The calibration accuracy of the sensing element-to-DDC panel readout for space temperature shall be checked.

c. Step 3 - Actuator Range Adjustments: A signal shall be applied to the actuator through an operator entered value at the DDC panel. The proper operation of the actuators and positioners for all dampers and valves shall be verified. The signal shall be varied from live zero to full range, and that the actuators travel from zero stroke to full stroke within the signal range shall be verified. It shall be verified that all sequenced and parallel-operated actuators move from zero stroke to full stroke in the proper direction, and move the connected device in the proper direction from one extreme position to the other.

d. Step 4 - Control-System Commissioning:

(1) With the fan ready to start, the system shall be placed in the ventilation-delay mode and in the occupied mode through operator entered values. It shall be verified that supply fans start. It shall be verified that the outside air and relief air dampers are closed, the return air damper is open, and the heating coil valve is under control, by artificially changing the space temperature through operator entered values. The system shall be placed out of the ventilation-delay-mode, and it shall be verified that the outside air, return air, and relief air dampers come under control by simulating a change in space temperature.

(2) The system shall be placed in the minimum outside air mode. It shall be verified that the outside air damper opens to minimum position.

(3) The calibration accuracy check for sensing element-to-DDC panel readout for the space temperature shall be performed. The space temperature setpoint shall be set for 70 degrees F at midpoint, 55 degrees F at the low end, and 85 degrees F at the high end. Proper operation of the temperature setpoint device at the space temperature sensing element and transmitter location shall be verified. The temperature setpoint device shall be set to the space temperature setpoint as shown.

(4) The system shall be placed in the unoccupied mode, and it shall be verified that the HVAC system shuts down, and the control system assumes the specified shutdown conditions. The space temperature shall be artificially changed to below the night setback setpoint, and it shall be verified that the HVAC system starts; the space temperature shall be artificially changed to above the night setback setpoint, and it shall be verified that the HVAC system stops. The night setback temperature setpoint shall be set at the setpoint.

(5) With the HVAC system running, a filter differential pressure switch input signal shall be simulated, at the device. It shall be verified that the filter alarm is initiated. The differential-pressure switch shall be set at the setpoint.

(6) With the HVAC system running, a freezestat trip input signal shall be simulated, at the device. HVAC system shutdown shall be verified. It shall be verified that a low temperature alarm is initiated. The freezestat shall be set at the setpoint. The HVAC system shall be restarted by manual restart and it shall be verified that the alarm returns to normal.

(7) With the HVAC system running, a smoke-detector trip input signal shall be simulated at each detector, and verification of control device actions and interlock functions as described in the Sequence of Operation shall be made. Simulation shall be performed without false alarming any Life Safety systems. It shall be verified that the HVAC system shuts down and that the smoke detector alarm is initiated. The detectors shall be reset. The HVAC system shall be restarted by manual reset, and it shall be verified that the alarm signal is changed to a return-to-normal signal.

5.4.7 Variable Air Volume Control System with Return Fan

Steps for installation shall be as follows:

a. Step 1 - System Inspection: The HVAC system shall be observed in its shutdown condition. It shall be verified that power is available where required, and that the outside air and relief air dampers are closed, the return air damper is open, and return/relief fan inlet vanes, the supply fan inlet vanes, and cooling coil valve are closed.

b. Step 2 - Calibration Accuracy Check with HVAC System Shutdown: Readings shall be taken with a digital thermometer at each temperature sensing element location. Each temperature shall be read at the DDC panel, and the thermometer and DDC panel display readings logged. The calibration accuracy of the sensing element-to-DDC panel readout for outside air, return air, mixed-air, and cooling-coil discharge-air temperatures shall be checked. The supply air flow and return air flow shall be read, using a digital indicating velometer, and the velometer and DDC panel display readings logged. The flows should read zero.

c. Step 3 - Actuator Range Adjustments: A signal shall be applied to the actuator through an operator entered value at the DDC panel. The proper operation of the actuators and positioners for all dampers and valves shall be visually verified. The signal shall be varied from live zero to full range, and actuator travel shall be verified from zero stroke to full stroke within the signal range. It shall be verified that all sequenced and parallel-operated actuators move from zero stroke to full stroke in the proper direction, and move the connected device in the proper direction from one extreme position to the other.

d. Step 4 - Control-System Commissioning:

(1) With the fans ready to start, the system shall be placed in the warm-up mode and in the occupied mode, and it shall be verified that supply fans and return fans start. It shall be verified that the outside air damper and relief air damper are closed, the return air damper is open, and the cooling coil valve and inlet vanes are under control, by simulating a change in the fan discharge temperature. The system shall be placed out of the ventilation-delay mode, and it shall be verified that the outside air, return air and relief air dampers come under control by simulating a change in the mixed air temperature.

(2) The system shall be placed in the minimum outside air mode and it shall be verified that the outside air damper modulates to maintain minimum cfm setpoint.

(3) The starter switch of return fans shall be turned to the OFF position. With supply fans running, a high-static-pressure input signal shall be simulated at the device by pressure input to the sensing device. HVAC system shutdown shall be observed, it shall be verified that the high-static alarm is initiated. The HVAC system shall be restarted by manual reset, and it shall be verified that the high-static alarm returns to normal.

(4) The two-point accuracy check of sensing element-to-DDC panel readout for the static pressure in the supply duct shall be performed.

(5) Each VAV terminal unit controller's minimum flow and maximum flow setpoints shall be set at the same setting. This will prevent the VAV-box damper from modulating under space temperature control and will achieve a constant supply-duct system pressure drop. The return-fan VSD shall be placed under control, and the starter switch shall be turned to the "AUTO" position so that the fan starts. The two-point calibration accuracy check of sensing element-to-DDC panel readout for the 2-air flow measurement stations shall be performed. The supply-fan variable speed drive shall be operated manually to change the supply-fan flow, and the control system shall be set to control at minimum cfm at 4-ma input and maximum cfm at 20-ma input. The supply fan flow shall be changed to verify that the return-flow setpoint tracks the supply-fan flow with the proper flow difference.

(6) The two-point calibration accuracy check of sensing element-to-DDC panel readout for outside air, return air, and mixed-air temperatures shall be performed. Temperature setpoint shall be set as shown.

(7) The two-point calibration accuracy check of sensing element-to-DDC panel readout for the fan discharge temperature shall be performed. The setpoint for the fan discharge temperature shall be set as shown. A change shall be simulated in the discharge air temperature through an operator entered value and it shall be verified that the control valve is modulated.

(8) The system shall be placed in the unoccupied mode and it shall be verified that the HVAC system shuts down, and the control system

assumes the specified shutdown conditions. The space temperature shall be artificially changed to below the night setback temperature setpoint, and it shall be verified that the HVAC system starts; the space temperature shall be artificially changed to above the night setback temperature setpoint and it shall be verified that the HVAC system stops. The night setback temperature setpoint shall be set at the setpoint.

(9) With the HVAC system running, a filter differential pressure switch input signal shall be simulated, at the device. It shall be verified that the filter alarm is initiated. The differential pressure switch shall be set at the setpoint as shown.

(10) With the HVAC system running, a freezestat trip input signal shall be simulated, at the device. HVAC system shutdown shall be verified. It shall be verified that a low temperature alarm is initiated. The freezestat shall be set at the setpoint as shown. The HVAC system shall be restarted by manual restart and it shall be verified that the alarm returns to normal.

(11) With the HVAC system running, a smoke detector trip input signal shall be simulated, at each device. Control-device actions and interlock functions as described in the Sequence of Operation shall be verified. Simulation shall be performed without false-alarming any Life Safety systems. It shall be verified that the HVAC system shuts down and the smoke detector alarm is initiated. The detectors shall be reset. The HVAC system shall be restarted by manual reset, and the alarm return to normal shall be verified.

(12) For each VAV terminal unit, velocity setpoints shall be set for minimum and maximum flow, and temperature setpoints for the heating/cooling dead band. The actions of the controller, the operation of the damper, and the operation of heating shall be verified. It shall be verified that space temperature is maintained.

END OF SECTION

SECTION 15990

TESTING, ADJUSTING AND BALANCING OF HVAC SYSTEMS

1 GENERAL

1.1 REFERENCES

The publications listed below form a part of this specification to the extent referenced. The publications are referred to in the text by basic designation only.

AMERICAN NATIONAL STANDARDS INSTITUTE (ANSI)

ANSI S1.4	(1983; S1.4A) Sound Level Meters
ANSI S1.11	(1986; R 1993) Octave-Band and Fractional-Octave-Band Analog and Digital Filters

AMERICAN SOCIETY OF HEATING, REFRIGERATING AND AIR CONDITIONING ENGINEERS (ASHRAE)

ASHRAE 111	(1988) Practices for Measurement, Testing, Adjusting, and Balancing of Building Heating, Ventilation, Air-Conditioning and Refrigeration Systems

ASSOCIATED AIR BALANCE COUNCIL (AABC)

AABC MN-1	(1989) National Standards for Testing and Balancing Heating, Ventilating, and Air Conditioning Systems

COOLING TOWER INSTITUTE (CTI)

CTI ATC-105	(1990) Acceptance Test Code for Water-Cooling Towers

NATIONAL ENVIRONMENTAL BALANCING BUREAU (NEBB)

NEBB-01	(1991) Procedural Standards for Testing Adjusting Balancing of Environmental Systems

NATIONAL FIRE PROTECTION ASSOCIATION (NFPA)

NFPA 90A	(1993) Installation of Air Conditioning and Ventilating Systems

SHEET METAL & AIR CONDITIONING CONTRACTORS' NATIONAL ASSOCIATION (SMACNA)

SMACNA-07	(1993) HVAC Systems - Testing, Adjusting and Balancing

1.2 GENERAL REQUIREMENTS

The Contractor shall select NEBB-01, SMACNA-07 or ASHRAE 111 as the standard for providing testing, adjusting and balancing of air and water systems. The selected standard shall be used throughout the project. Testing, adjusting, and balancing shall be accomplished by a firm certified for testing and balancing by National Environmental Balancing Bureau (NEBB). Prior to testing, adjusting, and balancing, the Contractor shall verify that the systems have been installed and are operating as specified. Approved detail drawings and all other data required for each system and/or component to be tested shall be made available at the jobsite during the entire testing, adjusting and balancing effort. The Contractor shall verify that all balancing devices are properly installed to permit testing, adjusting and balancing and that all duct leakage tests have been completed prior to testing, adjusting and balancing. The Contracting Officer shall be notified in writing of all equipment, components, or balancing devices, that are damaged, incorrectly installed, or missing, as well as any design deficiencies that will prevent proper testing, adjusting, and balancing. Testing, adjusting, and balancing shall not commence until approved by the Contracting Officer. Instrumentation accuracy shall be in accordance with the standard selected in this paragraph. Sound level measuring equipment shall be rated in accordance with ANSI S1.4 and ANSI S1.11.

1.3 INSTRUMENT ACCURACY REQUIREMENTS

All instrumentation shall be checked for accuracy before beginning testing, adjusting and balancing procedures. Instrument accuracy shall be in accordance with the standard selected in paragraph GENERAL REQUIREMENTS. Checks may be carried out against similar equipment maintained specifically for checking purposes or by the manufacturer or a recognized testing facility. All instrumentation used for testing shall be calibrated within 6 months of use. Pitot tubes and U-tube manometers do not require checking. In no case shall the instrumentation accuracy be less than specified by the instrument manufacturer. Any instrument falling out of calibration during the process of balancing and testing shall be recalibrated or removed from the site and replaced by a properly calibrated instrument. No instruments shall be allowed to remain on-site that are not in calibration.

1.4 SUBMITTALS

Government approval is required for submittals with a "GA" designation; submittals having an "FIO" designation are for information only. The following shall be submitted in accordance with Section 01330 SUBMITTAL PROCEDURES:

SD-09 Reports

Testing and Balancing; GA.

Three copies of a preliminary report, 30 days before balancing commences. The report shall be organized by specific systems and shall clearly identify each item of equipment to be tested, adjusted, and balanced. The appropriate test procedures and measurements to be taken for each item of equipment shall be listed. Instrument calibration records shall be provided on forms shown in SMACNA-07. Manufacturer's specified accuracy shall be shown. The report shall include floor plans showing all measurement locations and types of measurements to be made. All related data necessary

for testing, balancing, and adjusting, including fan curves and pump curves, shall be included. A system readiness checklist, similar to that shown in SMACNA-07, shall be included. The report shall contain a listing of the deficiencies of all systems to be tested, adjusted and balanced and the corrective action taken. The report shall contain a schedule for the testing and balancing. Six copies of the final report on forms shown in SMACNA-07, 30 days after completion of the test and balance operation. Data shall be in a hard bound cover identifying the project name, location, date of submittal, name of Contractor, and a general title indicating the specific area and type of work, and shall be signed by a registered professional engineer, employed by the test and balance firm, who has a minimum of 2 years experience in testing, adjusting and balancing work. The final report shall include a summary describing test methods, test results, and major corrective actions taken. The report shall include as-tested floor plans showing all measurement locations and types of measurements made. The air handling unit data shall include a static pressure profile diagram, and pitot tube traverses where possible. The VAV terminal data shall include maximum and minimum air flows, for design and actual conditions, and shall be supported with summaries which show the air outlet totals for each VAV terminal and the VAV terminal totals for each air handling unit. Air distribution data shall include coded drawings which show the exact location of each air outlet. Pump data shall include pump efficiency. Data for chillers, and heating and cooling coils, shall include heat balance calculations.

All instruments that are recalibrated and brought back onto the jobsite after being found to be out of calibration shall have recalibration records submitted on forms shown in SMACNA-07.

SD-13 Certificates

Qualification; GA.

Qualification data, 90 days prior to testing and balancing operations. The test and balance firm shall be certified by the Associated Air Balance Council (AABC) or the National Environmental Balancing Bureau (NEBB). The lead balancing technician shall be qualified by AABC or NEBB and his qualification data shall include past experience on at least five similar projects.

2 PRODUCTS (NOT APPLICABLE)

3 EXECUTION

3.1 TESTING AND BALANCING

3.1.1 General

The facility shall be essentially complete with final ceiling, walls, windows, doors and partitions in place. Doors and windows surrounding each area to be balanced shall be closed during testing and balancing operations. Air systems shall be complete and operable with balancing dampers, ducting, diffusers, returns, flow control boxes and control components in place. Exhaust fans shall be operational. Hydronic systems shall be complete and operable with balancing valves, flow meters, coils, pumps, piping and control components in place. All measurements and adjustments shall be made using procedures described in standard selected in paragraph GENERAL

REQUIREMENTS. Air motion and distribution from air terminals shall be as shown. Smoke tests may be used to demonstrate proper air distribution from air terminals. All data including deficiencies encountered and corrective action taken shall be recorded. If a system cannot be adjusted to meet the design requirements, the Contractor shall promptly notify the Contracting Officer in writing.

3.1.2 Air Systems

Clean filters shall be installed at the beginning of the testing, adjusting, and balancing effort. Each system shall be adjusted until all flow quantities are within plus ten percent and minus zero percent. Dampers shall be checked for tight shutoff. Air leakage around dampers shall be verified. Fire dampers shall be open. Fans shall be checked for correct direction of rotation and proper speed shall be verified. Fire and smoke dampers shall be tested at system design air flow to ensure proper closure in accordance with NFPA 90A and manufacturer's instructions prior to building occupancy.

3.1.2.1 General Balancing Methods

In addition to the requirements for specific systems, flows in supply, exhaust and return air systems shall be balanced using the methods in standard selected in paragraph GENERAL REQUIREMENTS. Throttling losses shall be limited. Air flow adjustments shall be made by first adjusting the fan speed to meet the design flow conditions. Fan speed adjustment may not be required for fan motors which are less than 746 W, or if throttling results in no greater than an additional 1/3 W draw above that required if the fan speed were adjusted. Flows and pressures shall be checked in all main risers and supply ducts at all supply, exhaust and return fan discharges. All flows shall be recorded before and after each adjustment.

3.1.2.2 Specific Systems

All special or additional procedures for testing and balancing shall be in accordance with the applicable requirements of the standard selected in paragraph GENERAL REQUIREMENTS. If a system has diversity, only the required quantity of wide open terminals shall be used to meet the design air flow.

3.1.3 Hydronic Systems

All valves and control components shall be open or set as required for maximum system flow. Each system shall be adjusted until all flow quantities are within the tolerances of the standard selected in paragraph GENERAL REQUIREMENTS. Pumps shall be checked for proper speed. Pump activation signal and deactivation signal valves shall be verified. Pump motor current shall be checked at maximum design flow. Variable speed pumping systems shall be tested at a minimum of four separate flow conditions to simulate design diversity.

3.1.3.1 General Balancing Methods

In addition to the requirements for specific systems, flows in piping, coils and other hydronic system components shall be balanced using the flow meter, equipment pressure drop or pump curve methods in accordance with the applicable provisions of the standard selected in paragraph GENERAL

REQUIREMENTS. Flows shall be checked in all main risers and branches and condenser water lines and at all heating and cooling coils, heat exchangers, boilers, chillers, and pump discharges. Pressure taps on all pumps shall be made at factory suction and discharge tappings where available. All flows shall be recorded before and after each adjustment.

3.1.3.2 Specific Systems

Where specific systems require special or additional procedures for testing and balancing, such procedures shall be in accordance with the standard selected in paragraph GENERAL REQUIREMENTS. If a system has diversity, only the required quantity of wide-open terminals shall be used to meet the design water flow.

a. Summer-Winter: Summer-winter systems shall be balanced in the summer mode of operation. Following completion of the summer-mode balancing, equipment used for winter operation shall be balanced.

3.1.4 Marking of Setting

Following final acceptance of certified reports by the Contracting Officer, the setting of all HVAC adjustment devices including valves, splitters, and dampers shall be permanently marked by the testing and balancing engineer so that adjustment can be restored if disturbed at any time.

3.1.5 Marking of Test Ports

The testing and balancing engineer shall permanently and legibly mark and identify the location points of the duct test ports. If the ductwork has exterior insulation, these markings shall be made on the exterior side of the ductwork insulation. All penetrations through ductwork and ductwork insulation shall be properly sealed to prevent air leakage or loss of vapor barrier.

3.1.6 Sound Level Testing

After the systems are properly tested, adjusted and balanced, sound levels shall be checked in accordance with the applicable provisions of NEBB-01. Octave-band analysis and noise-criteria curve data shall be recorded on forms shown in NEBB-01. All occupied areas including offices, corridors, auditorium and meeting rooms, and hospital rooms shall be verified to be within the sound levels shown or as specified. Any areas not meeting the requirements of NEBB-01 or the specifications or drawings shall be clearly indicated on the form and an explanation of all discrepancies shall be provided in test report.

3.2 CONTROL SYSTEMS

Testing, adjusting, and balancing of the systems shall be coordinated with the control system installation. All control components shall be verified to be properly installed and operating as specified before proceeding with testing, adjusting, and balancing. Verification shall be in accordance with NEBB-01.

END OF SECTION

SECTION 15995

COMMISSIONING OF HVAC SYSTEMS

1 GENERAL

1.1 SUBMITTALS

Government approval is required for submittals with a "GA" designation; submittals with "FIO" designation are for information only. The following shall be submitted in accordance with Section 01330 SUBMITTAL PROCEDURES:

SD-01 Data

Commissioning Team; GA.

List of team members who will represent the Contractor in the pre-commissioning checks and functional performance testing, at least 2 weeks prior to the start of pre-commissioning checks. Proposed revision to the list, prior to the start of the impacted work.

SD-06 Instructions

Test Procedures; GA.

Detailed procedures for pre-commissioning checks and functional performance tests, at least 4 weeks prior to the start of pre-commissioning checks.

SD-07 Schedules

Test Schedule; GA.

Schedule for pre-commissioning checks and functional performance tests, at least 2 weeks prior to the start of pre-commissioning checks.

SD-09 Reports

Test Reports; GA.

Completed pre-commissioning checklists and functional performance test checklists organized by system and by subsystem and submitted as one package. The results of failed tests shall be included along with a description of the corrective action taken.

1.2 SEQUENCING AND SCHEDULING

The work described in this Section shall begin only after all work required in related Sections, including Section 15951 DIRECT DIGITAL CONTROL OF HVAC and Section 15990 TESTING, ADJUSTING AND BALANCING OF HVAC SYSTEMS, has been successfully completed, and all test and inspection reports and operation and maintenance manuals required in these Sections have been submitted and approved.

2 PRODUCTS (NOT APPLICABLE)

3 EXECUTION

3.1 COMMISSIONING TEAM AND CHECKLISTS

The Contractor shall designate team members to participate in the pre-commissioning checks and the functional performance testing specified herein. In addition, the Government will be represented by a representative of the Contracting Officer, the Design Agent's Representative, and the Using Agency. The team members shall be as follows:

Designation	Function
Q	Contractor's Chief Quality Control Representative
M	Contractor's Mechanical Representative
E	Contractor's Electrical Representative
T	Contractor's Testing, Adjusting, and Balancing Representative
C	Contractor's Controls Representative
D	Design Agent's Representative
O	Contracting Officer's Representative
U	Using Agency's Representative

Each checklist shown in appendices A and B shall be completed by the commissioning team. Acceptance by each commissioning team member of each pre-commissioning checklist item shall be indicated by initials and date unless an "X" is shown indicating that participation by that individual is not required. Acceptance by each commissioning team member of each functional performance test checklist shall be indicated by signature and date.

3.2 TESTS

The pre-commissioning checks and functional performance tests shall be performed in a manner which essentially duplicates the checking, testing, and inspection methods established in the related Sections. Where checking, testing, and inspection methods are not specified in other Sections, methods shall be established which will provide the information required. Testing and verification required by this section shall be performed during the Commissioning phase. Requirements in related Sections are independent from the requirements of this Section and shall not be used to satisfy any of the requirements specified in this Section. The Contractor shall provide all materials, services, and labor required to perform the pre-commissioning checks and functional performance tests. A pre-commissioning check or functional performance test shall be aborted if any system deficiency prevents the successful completion of the test or if any participating non-Government commissioning team member of which participation is specified is not present for the test. The Contractor shall reimburse the Government for all costs associated with effort lost due to tests that are aborted. These costs shall include salary, travel costs and per diem (where applicable) for Government commissioning team members.

3.2.1 Pre-Commissioning Checks

Pre-commissioning checks shall be performed for the items indicated on the checklists in Appendix A. Deficiencies discovered during these checks shall

be corrected and retested in accordance with the applicable contract requirements.

3.2.2 Functional Performance Tests

Functional performance tests shall be performed for the items indicated on the checklists in Appendix B. Functional performance tests shall begin only after all pre-commissioning checks have been successfully completed. Tests shall prove all modes of the sequences of operation, and shall verify all other relevant contract requirements. Tests shall begin with equipment or components and shall progress through subsystems to complete systems. Upon failure of any functional performance test checklist item, the Contractor shall correct all deficiencies in accordance with the applicable contract requirements. The checklist shall then be repeated until it has been completed with no errors.

APPENDIX A

PRE-COMMISSIONING CHECKLISTS

Pre-commissioning checklist - Piping

For Plumbing Piping System

Checklist Item	Q	M	E	T	C	D	O	U
Installation								
a. Piping complete.	___	___	X	___	X	___	___	___
b. As-built shop drawings submitted.	___	___	X	___	X	___	___	___
c. Piping flushed and cleaned.	___	___	X	___	X	___	___	___
d. Strainers cleaned.	___	___	X	___	X	___	___	___
e. Valves installed as required.	___	___	X	___	X	___	___	___
f. Piping insulated as required.	___	___	X	___	X	___	___	___
g. Thermometers and gauges installed as required.	___	___	X	___	X	___	___	___
h. Verify operation of valves.	___	___	X	___	___	___	___	___
i. Air vents installed as specified.	___	___	X	X	X	___	___	___
j. Flexible connectors installed as specified.	___	___	X	X	X	___	___	___
k. Verify that piping has been labeled and valves identified as specified.	___	___	X	___	___	___	___	___
Testing, Adjusting, and Balancing (TAB)								
a. Hydrostatic test complete.	___	___	X	___	X	___	___	___
b. TAB operation complete.	___	___	X	___	___	___	___	___

Pre-commissioning checklist - Piping

For Heating Water Piping System

Checklist Item	Q	M	E	T	C	D	O	U
Installation								
a. Piping complete.	___	___	X	___	X	___	___	___
b. As-built shop drawings submitted.	___	___	X	___	X	___	___	___
c. Piping flushed and cleaned.	___	___	X	___	X	___	___	___
d. Strainers cleaned.	___	___	X	___	X	___	___	___
e. Valves installed as required.	___	___	X	___	X	___	___	___
f. Piping insulated as required.	___	___	X	___	X	___	___	___
g. Thermometers and gauges installed as required.	___	___	X	___	X	___	___	___
h. Verify operation of valves.	___	___	X	___	___	___	___	___
i. Air vents installed as specified.	___	___	X	X	X	___	___	___
j. Flexible connectors installed as specified.	___	___	X	X	X	___	___	___
k. Verify that piping has been labeled and valves identified as specified.	___	___	X	___	___	___	___	___
l. Water treatment complete.	___	___	X	___	___	___	___	___
Testing, Adjusting, and Balancing (TAB)								
a. Hydrostatic test complete.	___	___	X	___	X	___	___	___
b. TAB operation complete.	___	___	X	___	___	___	___	___

Pre-commissioning checklist - Piping

For Chilled Water Piping System

Checklist Item	Q	M	E	T	C	D	O	U
Installation								
a. Piping complete.	___	___	X	___	X	___	___	___
b. As-built shop drawings submitted.	___	___	X	___	X	___	___	___
c. Piping flushed and cleaned.	___	___	X	___	X	___	___	___
d. Strainers cleaned.	___	___	X	___	X	___	___	___
e. Valves installed as required.	___	___	X	___	X	___	___	___
f. Piping insulated as required.	___	___	X	___	X	___	___	___
g. Thermometers and gauges installed as required.	___	___	X	___	X	___	___	___
h. Verify operation of valves.	___	___	X	___	___	___	___	___
i. Air vents installed as specified.	___	___	X	X	X	___	___	___
j. Flexible connectors installed as specified.	___	___	X	X	X	___	___	___
k. Verify that piping has been labeled and valves identified as specified.	___	___	X	___	___	___	___	___
l. Propylene Glycol concentration verified.	___	___	X	___	___	___	___	___
Testing, Adjusting, and Balancing (TAB)								
a. Hydrostatic test complete.	___	___	X	___	X	___	___	___
b. TAB operation complete.	___	___	X	___	___	___	___	___

Pre-commissioning Checklist - Ductwork

For Air Handler: AHU-1

Checklist Item	Q	M	E	T	C	D	O	U
Installation								
a. Ductwork complete.	___	___	X	___	X	___	___	___
b. Ductwork insulation complete.	___	___	X	___	X	___	___	___
c. Acoustical lining complete.	___	___	X	___	X	___	___	___
d. As-built shop drawings submitted.	___	___	X	___	X	___	___	___
e. Ductwork leak test complete.	___	___	X	___	X	___	___	___
f. Fire dampers and access doors installed as required with installation of each verified by the specified team members initialing each location on a copy of the as-built drawings.	___	___	X	___	X	___	___	___
g. Ductwork insulated as required.	___	___	X	___	X	___	___	___
h. Thermometers and gauges installed as required.	___	___	___	___	___	___	___	___
i. Verify open/closed status of dampers.	___	___	X	___	X	___	___	___
j. Flexible connectors installed as specified.	___	___	X	___	X	___	___	___
Testing, Adjusting, and Balancing (TAB)								
a. TAB operation complete.	___	___	X	___	X	___	___	___

Pre-commissioning Checklist - Ductwork

For Air Handler: AHU-2

Checklist Item	Q	M	E	T	C	D	O	U
Installation								
a. Ductwork complete.	___	___	X	___	X	___	___	___
b. Ductwork insulation complete.	___	___	X	___	X	___	___	___
c. Acoustical lining complete.	___	___	X	___	X	___	___	___
d. As-built shop drawings submitted.	___	___	X	___	X	___	___	___
e. Ductwork leak test complete.	___	___	X	___	X	___	___	___
f. Fire dampers and access doors installed as required with installation of each verified by the specified team members initialing each location on a copy of the as-built drawings.	___	___	X	___	X	___	___	___
g. Ductwork insulated as required.	___	___	X	___	X	___	___	___
h. Thermometers and gauges installed as required.	___	___	___	___	___	___	___	___
i. Verify open/closed status of dampers.	___	___	X	___	X	___	___	___
j. Flexible connectors installed as specified.	___	___	X	___	X	___	___	___
Testing, Adjusting, and Balancing (TAB)								
a. TAB operation complete.	___	___	X	___	X	___	___	___

Pre-commissioning Checklist - Variable Volume Air Handling Unit

For Air Handling Unit: AHU-1

Checklist Item	Q	M	E	T	C	D	O	U
Installation								
a. Vibration isolation devices installed.	___	___	X	X	X	___	___	___
b. Inspection and access doors are operable and sealed.	___	___	X	___	X	___	___	___
c. Casing undamaged.	___	___	X	X	X	___	___	___
d. Insulation undamaged.	___	___	X	X	X	___	___	___
e. Condensate drainage is unobstructed. (Visually verify drainage by pouring a cup of water into drain pan.)	___	___	X	X	X	___	___	___
f. Fan belt adjusted.	___	___	X	___	X	___	___	___
g. Manufacturer's required maintenance clearance provided.	___	___	X	X	X	___	___	___
Electrical								
a. Power available to unit disconnect.	___	___	___	X	X	___	___	___
b. Power available to unit control panel and VSD.	___	___	___	X	___	___	___	___
c. Proper motor rotation verified.	___	___	___	___	X	___	___	___
d. Verify that power disconnect is located within sight of the unit it controls.	___	___	___	X	___	___	___	___
Coils								
a. Chilled water piping properly connected.	___	___	X	X	X	___	___	___

b. Chilled water piping pressure tested.	___	___	X	X	X	___	___
c. Hot water piping properly connected.	___	___	X	X	X	___	___
d. Hot water piping pressure tested.	___	___	X	X	X	___	___
e. Air vents installed on water coils with shutoff valves as specified.	___	___	X	X	X	___	___
f. Any damage to coil fins has been repaired.	___	___	X	___	X	___	___
Controls							
a. Control valves/actuators properly installed.	___	___	X	___	___	___	___
b. Control valves/actuators operable.	___	___	X	___	___	___	___
c. Dampers/actuators properly installed.	___	___	X	___	___	___	___
d. Dampers/actuators operable.	___	___	X	___	___	___	___
e. Verify proper location, installation and calibration of duct static pressure sensor.	___	___	X	___	___	___	___
f. Fan VSD operable.	___	___	X	___	___	___	___
g. Air handler controls system operational.	___	___	X	___	___	___	___
Testing, Adjusting, and Balancing (TAB)							
a. Construction filters removed and replaced.	___	___	X	___	___	___	___
b. TAB report submitted.	___	___	X	___	X	___	___
c. TAB results within +10%/-0% of L/s shown on drawings							
d. TAB results for outside air intake within +10%/-0% of both the minimum and maximum L/s shown on drawings.	___	___	X	___	X	___	___ ___

Pre-commissioning Checklist - Variable Volume Air Handling Unit

For Air Handling Unit: AHU-2

Checklist Item	Q	M	E	T	C	D	O	U
Installation								
a. Vibration isolation devices installed.	___	___	X	X	X	___	___	___
b. Inspection and access doors are operable and sealed.	___	___	X	___	X	___	___	___
c. Casing undamaged.	___	___	X	X	X	___	___	___
d. Insulation undamaged.	___	___	X	X	X	___	___	___
e. Condensate drainage is unobstructed. (Visually verify drainage by pouring a cup of water into drain pan.)	___	___	X	X	X	___	___	___
f. Fan belt adjusted.	___	___	X	___	X	___	___	___
g. Manufacturer's required maintenance clearance provided.	___	___	X	X	X	___	___	___
Electrical								
a. Power available to unit disconnect.	___	___	___	X	X	___	___	___
b. Power available to unit control panel and VSD.	___	___	___	X	___	___	___	___
c. Proper motor rotation verified.	___	___	___	___	X	___	___	___
d. Verify that power disconnect is located within sight of the unit it controls.	___	___	___	X	___	___	___	___
Coils								
a. Chilled water piping properly connected.	___	___	X	X	X	___	___	___
b. Chilled water piping pressure tested.	___	___	X	X	X	___	___	___

c.	Hot water piping properly connected.	___	___	X	X	X	___	___
d.	Hot water piping pressure tested.	___	___	X	X	X	___	___
e.	Air vents installed on water coils with shutoff valves as specified.	___	___	X	X	X	___	___
f.	Any damage to coil fins has been repaired.	___	___	X	___	X	___	___

Controls

a.	Control valves/actuators properly installed.	___	___	X	___	___	___	___
b.	Control valves/actuators operable.	___	___	X	___	___	___	___
c.	Dampers/actuators properly installed.	___	___	X	___	___	___	___
d.	Dampers/actuators operable.	___	___	X	___	___	___	___
e.	Verify proper location, installation and calibration of duct static pressure sensor.	___	___	X	___	___	___	___
f.	Fan VSD operable.	___	___	X	___	___	___	___
g.	Air handler controls system operational.	___	___	X	___	___	___	___

Testing, Adjusting, and Balancing (TAB)

a.	Construction filters removed and replaced.	___	___	X	___	___	___	___
b.	TAB report submitted.	___	___	X	___	X	___	___
c.	TAB results within +10%/-0% of L/s shown on drawings							
d.	TAB results for outside air intake within +10%/-0% of both the minimum and maximum L/s shown on drawings.	___	___	X	___	X	___	___ ___

Pre-commissioning Checklist - VAV Terminal

For VAV Terminals:

Checklist Item	Q	M	E	T	C	D	O	U
Installation								
a. VAV terminal in place.	___	___	X	X	X	___	___	___
b. VAV terminal ducted.	___	___	X	X	X	___	___	___
c. VAV terminal connected to controls.	___	___	X	X	___	___	___	___
d. Reheat coil connected to hot water pipe.	___	___	X	___	X	___	___	___
e. Specified maintenance clearance provided.	___	___	X	X	X	___	___	___
f. Verify filter can be removed.	___	___	X	X	X	___	___	___
Controls								
a. Reheat VAV terminal controls set.	___	___	X	X	___	___	___	___
b. Reheat terminal/coil controls verified.	___	___	X	X	___	___	___	___
Testing, Adjusting, and Balancing (TAB)								
a. Verify terminal maximum air flow set.	___	___	X	___	___	___	___	___
b. Verify terminal minimum air flow set.	___	___	X	___	___	___	___	___
c. TAB operation complete.	___	___	X	___	X	___	___	___

Pre-commissioning Checklist - Pumps

For Pump: HWP-1

Checklist Item	Q	M	E	T	C	D	O	U
Installation								
a. Pumps grouted in place.	___	___	X	X	X	___	___	___
b. Pump vibration isolation devices functional.	___	___	X	X	X	___	___	___
c. Pump/motor coupling alignment verified.	___	___	X	X	X	___	___	___
d. Piping system installed.	___	___	X	X	X	___	___	___
e. Piping system pressure tested.	___	___	X	X	X	___	___	___
f. Pump not leaking.	___	___	X	X	X	___	___	___
g. Field assembled couplings aligned to meet manufacturer's prescribed tolerances.	___	___	X	X	X	___	___	___
Electrical								
a. Power available to pump disconnect.	___	___	___	X	X	___	___	___
b. Pump rotation verified.	___	___	___	X	X	___	___	___
c. Control system interlocks functional.	___	___	___	X	___	___	___	___
d. Verify that power disconnect is located within sight of the unit it controls.	___	___	___	X	___	___	___	___
Testing, Adjusting, and Balancing (TAB)								
a. Pressure/temperature gauges installed.	___	___	X	___	X	___	___	___
b. Piping system cleaned.	___	___	X	X	X	___	___	___

c. Water balance complete. ___ ___ X ___ X ___ ___ ___

d. Water balance with design maximum flow. ___ ___ X ___ X ___ ___ ___

e. TAB Report submitted. ___ ___ X ___ X ___ ___ ___

Pre-commissioning Checklist - Pumps

For Pump: HWP-2

Checklist Item	Q	M	E	T	C	D	O	U
Installation								
a. Pumps grouted in place.	___	___	X	X	X	___	___	___
b. Pump vibration isolation devices functional.	___	___	X	X	X	___	___	___
c. Pump/motor coupling alignment verified.	___	___	X	X	X	___	___	___
d. Piping system installed.	___	___	X	X	X	___	___	___
e. Piping system pressure tested.	___	___	X	X	X	___	___	___
f. Pump not leaking.	___	___	X	X	X	___	___	___
g. Field assembled couplings aligned to meet manufacturer's prescribed tolerances.	___	___	X	X	X	___	___	___
Electrical								
a. Power available to pump disconnect.	___	___	___	X	X	___	___	___
b. Pump rotation verified.	___	___	___	X	X	___	___	___
c. Control system interlocks functional.	___	___	___	X	___	___	___	___
d. Verify that power disconnect is located within sight of the unit it controls.	___	___	___	X	___	___	___	___
Testing, Adjusting, and Balancing (TAB)								
a. Pressure/temperature gauges installed.	___	___	X	___	X	___	___	___
b. Piping system cleaned.	___	___	X	X	X	___	___	___

c. Water balance complete. ___ ___ X ___ X ___ ___ ___

d. Water balance with design maximum flow. ___ ___ X ___ X ___ ___ ___

e. TAB Report submitted. ___ ___ X ___ X ___ ___ ___

Pre-commissioning Checklist - Pumps

For Pump: CHP-1

Checklist Item	Q	M	E	T	C	D	O	U
Installation								
a. Pumps grouted in place.	___	___	X	X	X	___	___	___
b. Pump vibration isolation devices functional.	___	___	X	X	X	___	___	___
c. Pump/motor coupling alignment verified.	___	___	X	X	X	___	___	___
d. Piping system installed.	___	___	X	X	X	___	___	___
e. Piping system pressure tested.	___	___	X	X	X	___	___	___
f. Pump not leaking.	___	___	X	X	X	___	___	___
g. Field assembled couplings aligned to meet manufacturer's prescribed tolerances.	___	___	X	X	X	___	___	___
Electrical								
a. Power available to pump disconnect.	___	___	___	X	X	___	___	___
b. Pump rotation verified.	___	___	___	X	X	___	___	___
c. Control system interlocks functional.	___	___	___	X	___	___	___	___
d. Verify that power disconnect is located within sight of the unit it controls.	___	___	___	X	___	___	___	___
Testing, Adjusting, and Balancing (TAB)								
a. Pressure/temperature gauges installed.	___	___	X	___	X	___	___	___
b. Piping system cleaned.	___	___	X	X	X	___	___	___

c. Water balance complete. ___ ___ X ___ X ___ ___ ___

d. Water balance with design maximum flow. ___ ___ X ___ X ___ ___ ___

e. TAB Report submitted. ___ ___ X ___ X ___ ___ ___

Pre-commissioning Checklist - Packaged Air Cooled Chiller

For Chiller: CH-1

Checklist Item	Q	M	E	T	C	D	O	U
Installation								
a. Chiller properly piped.	___	___	X	___	___	___	___	___
b. Chilled water pipe leak tested.	___	___	X	X	X	___	___	___
c. Verify that refrigerant used complies with specified requirements.	___	___	X	X	X	___	___	___
d. Any damage to coil fins has been repaired.	___	___	X	___	X	___	___	___
e. Manufacturer's required maintenance clearance provided.	___	___	X	X	X	___	___	___
Electrical								
a. Power available to unit disconnect.	___	___	___	X	___	___	___	___
b. Power available to unit control panel.	___	___	___	X	___	___	___	___
c. Verify that power disconnect is located within sight of the unit it controls.	___	___	___	X	___	___	___	___
Controls								
a. Factory startup and checkout complete.	___	___	X	X	___	___	___	___
b. Chiller safety/protection devices tested.	___	___	X	X	___	___	___	___
c. Chilled water flow switch installed.	___	___	X	X	___	___	___	___
d. Chilled water flow switch tested.	___	___	X	X	___	___	___	___
e. Chilled water pump interlock installed.	___	___	X	X	X	___	___	___

f. Chilled water pump interlock tested. ___ ___ ___ X ___ ___ ___ ___

Pre-commissioning Checklist - Hot Water Boiler

For Boiler: B-1

Checklist Item	Q	M	E	T	C	D	O	U
Installation								
a. Boiler flue installed.	___	___	X	___	___	___	___	___
b. Boiler combustion air duct installed.	___	___	X	___	___	___	___	___
c. Boiler hot water piping installed.	___	___	X	___	___	___	___	___
d. Boiler hot water piping tested.	___	___	X	X	___	___	___	___
e. Boiler makeup water piping installed.	___	___	X	___	___	___	___	___
f. Boiler gas piping installed.	___	___	X	X	X	___	___	___
g. Boiler gas piping tested.	___	___	X	X	X	___	___	___
h. Manufacturer's required maintenance clearance provided.	___	___	X	___	___	___	___	___
i. Boiler control panel installed and operational.	___	___	X	___	___	___	___	___
Startup								
a. Boiler system cleaned and filled with treated water.	___	___	X	___	___	___	___	___
b. Boiler safety/protection devices, including high temperature burner shut-off, low water cutoff, flame failure, have been tested.	___	___	___	X	___	___	___	___
c. Verify that PRV rating conforms to boiler rating.	___	___	___	X	___	___	___	___

d. Boiler startup and checkout complete.	___	___	X	X	___	___	___
e. Combustion efficiency demonstrated.	___	___	X	___	X	___	___
Electrical							
a. Verify that power disconnect is located within sight of the unit served.	___	___	___	X	___	___	___
Controls							
a. Hot water pump interlock installed.	___	___	___	X	___	___	___
b. Hot water pump interlock tested.	___	___	___	X	___	___	___
c. Boiler loop heating system balanced.	___	___	X	X	___	___	___
d. Boiler loop heating controls operational.	___	___	X	X	___	___	___

Pre-commissioning Checklist - Hot Water Boiler

For Boiler: B-2

Checklist Item	Q	M	E	T	C	D	O	U
Installation								
a. Boiler flue installed.	___	___	X	___	___	___	___	___
b. Boiler combustion air duct installed.	___	___	X	___	___	___	___	___
c. Boiler hot water piping installed.	___	___	X	___	___	___	___	___
d. Boiler hot water piping tested.	___	___	X	X	___	___	___	___
e. Boiler makeup water piping installed.	___	___	X	___	___	___	___	___
f. Boiler gas piping installed.	___	___	X	X	X	___	___	___
g. Boiler gas piping tested.	___	___	X	X	X	___	___	___
h. Manufacturer's required maintenance clearance provided.	___	___	X	___	___	___	___	___
i. Boiler control panel installed and operational.	___	___	X	___	___	___	___	___
Startup								
a. Boiler system cleaned and filled with treated water.	___	___	X	___	___	___	___	___
b. Boiler safety/protection devices, including high temperature burner shut-off, low water cutoff, flame failure, have been tested.	___	___	___	X	___	___	___	___
c. Verify that PRV rating conforms to boiler rating.	___	___	___	X	___	___	___	___

d. Boiler startup and checkout complete.	___	___	X	X	___	___	___
e. Combustion efficiency demonstrated.	___	___	X	___	X	___	___
Electrical							
a. Verify that power disconnect is located within sight of the unit served.	___	___	___	X	___	___	___
Controls							
a. Hot water pump interlock installed.	___	___	___	X	___	___	___
b. Hot water pump interlock tested.	___	___	___	X	___	___	___
c. Boiler loop heating system balanced.	___	___	X	X	___	___	___
d. Boiler loop heating controls operational.	___	___	X	X	___	___	___

Pre-commissioning Checklist - Unit Heater

For Unit Heater: UH-1

Checklist Item	Q	M	E	T	C	D	O	U
Installation								
a. Hot water piping properly connected.	___	___	X	___	___	___	___	___
b. Hot water piping pressure tested.	___	___	X	___	___	___	___	___
c. Air vent installed on hot water coil with shutoff valve as specified.	___	___	X	X	X	___	___	___
d. Any damage to coil fins has been repaired.	___	___	X	___	X	___	___	___
e. Manufacturer's required maintenance/ operational clearance provided.	___	___	X	X	X	___	___	___
Electrical								
a. Power available to unit disconnect.	___	___	___	X	___	___	___	___
b. Proper motor rotation verified.	___	___	___	X	X	___	___	___
c. Verify that power disconnect is located within sight of the unit it controls.	___	___	___	X	___	___	___	___
d. Power available to electric heating coil.	___	___	___	X	___	___	___	___
Controls								
a. Control valves properly installed.	___	___	X	___	___	___	___	___
b. Control valves operable.	___	___	X	X	___	___	___	___
c. Verify proper location and installation of thermostat.	___	___	X	___	___	___	___	___
Testing, Adjusting, and Balancing (TAB)								

a. TAB Report submitted. ___ ___ X ___ X ___ ___ ___

Pre-commissioning Checklist - Unit Heater

For Unit Heater: UH-2

Checklist Item	Q	M	E	T	C	D	O	U
Installation								
a. Hot water piping properly connected.	___	___	X	___	___	___	___	___
b. Hot water piping pressure tested.	___	___	X	___	___	___	___	___
c. Air vent installed on hot water coil with shutoff valve as specified.	___	___	X	X	X	___	___	___
d. Any damage to coil fins has been repaired.	___	___	X	___	X	___	___	___
e. Manufacturer's required maintenance/ operational clearance provided.	___	___	X	X	X	___	___	___
Electrical								
a. Power available to unit disconnect.	___	___	___	X	___	___	___	___
b. Proper motor rotation verified.	___	___	___	X	X	___	___	___
c. Verify that power disconnect is located within sight of the unit it controls.	___	___	___	X	___	___	___	___
d. Power available to electric heating coil.	___	___	___	X	___	___	___	___
Controls								
a. Control valves properly installed.	___	___	X	___	___	___	___	___
b. Control valves operable.	___	___	X	X	___	___	___	___
c. Verify proper location and installation of thermostat.	___	___	X	___	___	___	___	___
Testing, Adjusting, and Balancing (TAB)								

a. TAB Report submitted. ___ ___ X ___ X ___ ___ ___

Pre-commissioning Checklist - Unit Heater

For Unit Heater: UH-3

Checklist Item	Q	M	E	T	C	D	O	U
Installation								
a. Hot water piping properly connected.	___	___	X	___	___	___	___	___
b. Hot water piping pressure tested.	___	___	X	___	___	___	___	___
c. Air vent installed on hot water coil with shutoff valve as specified.	___	___	X	X	X	___	___	___
d. Any damage to coil fins has been repaired.	___	___	X	___	X	___	___	___
e. Manufacturer's required maintenance/ operational clearance provided.	___	___	X	X	X	___	___	___
Electrical								
a. Power available to unit disconnect.	___	___	___	X	___	___	___	___
b. Proper motor rotation verified.	___	___	___	X	X	___	___	___
c. Verify that power disconnect is located within sight of the unit it controls.	___	___	___	X	___	___	___	___
d. Power available to electric heating coil.	___	___	___	X	___	___	___	___
Controls								
a. Control valves properly installed.	___	___	X	___	___	___	___	___
b. Control valves operable.	___	___	X	X	___	___	___	___
c. Verify proper location and installation of thermostat.	___	___	X	___	___	___	___	___
Testing, Adjusting, and Balancing (TAB)								

a. TAB Report submitted. ___ ___ X ___ X ___ ___ ___

Pre-commissioning Checklist - Exhaust Fan

For Exhaust Fan: EF-1

Checklist Item	Q	M	E	T	C	D	O	U
Installation								
a. Installation conforms to drawings.	___	___	X	___	X	___	___	___
Electrical								
a. Power available to fan disconnect.	___	___	___	X	___	___	___	___
b. Proper motor rotation verified.	___	___	___	___	X	___	___	___
c. Verify that power disconnect is located within sight of the unit it controls.	___	___	___	X	___	___	___	___
Controls								
a. Control interlocks properly installed.	___	___	___	X	___	___	___	___
b. Control interlocks operable.	___	___	___	X	___	___	___	___
c. Dampers/actuators properly installed.	___	___	X	___	___	___	___	___
d. Dampers/actuators operable.	___	___	X	___	___	___	___	___
Testing, Adjusting, and Balancing (TAB)								
a. TAB results +10%/-0% to L/s shown on drawings	___	___	X	___	X	___	___	___
b. TAB Report submitted.	___	___	X	___	X	___	___	___

Pre-commissioning Checklist - Exhaust Fan

For Exhaust Fan: EF-2

Checklist Item	Q	M	E	T	C	D	O	U
Installation								
a. Installation conforms to drawings.	___	___	X	___	X	___	___	___
Electrical								
a. Power available to fan disconnect.	___	___	___	X	___	___	___	___
b. Proper motor rotation verified.	___	___	___	___	X	___	___	___
c. Verify that power disconnect is located within sight of the unit it controls.	___	___	___	X	___	___	___	___
Controls								
a. Control interlocks properly installed.	___	___	___	X	___	___	___	___
b. Control interlocks operable.	___	___	___	X	___	___	___	___
c. Dampers/actuators properly installed.	___	___	X	___	___	___	___	___
d. Dampers/actuators operable.	___	___	X	___	___	___	___	___
Testing, Adjusting, and Balancing (TAB)								
a. TAB results +10%/-0% to L/s shown on drawings	___	___	X	___	X	___	___	___
b. TAB Report submitted.	___	___	X	___	X	___	___	___

Pre-commissioning Checklist - HVAC System Controls

For HVAC System: _____

Checklist Item	Q	M	E	T	C	D	O	U
Installation								
a. As-built shop drawings submitted.	___	___	X	X	___	___	___	___
b. Layout of control panel matches drawings.	___	___	X	X	___	___	___	___
c. Framed instructions mounted in or near control panel.	___	___	X	X	___	___	___	___
d. Components properly labeled (on inside and outside of panel).	___	___	X	X	___	___	___	___
e. Control components piped and/or wired to each labeled terminal strip.	___	___	X	X	___	___	___	___
f. EMCS connection made to each labeled terminal strip as shown.	___	___	X	X	___	___	___	___
g. Control wiring and tubing labeled at all terminations, splices, and junctions.	___	___	X	X	___	___	___	___
h. Shielded wiring used on electronic sensors.	___	___	X	X	___	___	___	___
i. Air dryer installed as specified.	___	___	X	X	___	___	___	___
j. Water drain installed as specified.	___	___	X	X	___	___	___	___
Main Power								
a. 110 volt AC power available to panel.	___	___	___	X	___	___	___	___
Testing, Commissioning, and Balancing								
a. Testing, Commissioning, and Balancing Report submitted.	___	___	X	___	___	___	___	___

APPENDIX B

FUNCTIONAL PERFORMANCE TESTS CHECKLISTS

Functional Performance Test Checklist - Pumps

For Pump: CHP-1

Prior to performing this checklist, ensure that system is pressurized and the make-up water system is operational.

1. Activate pump start using control system commands (all possible combination, on/auto, etc.). ON_____ AUTO_____ OFF_____

a. Verify pressure drop across strainer:

Strainer inlet pressure _____ kPa
Strainer outlet pressure _____ kPa

b. Verify pump inlet/outlet pressure reading, compare to Testing, Adjusting, and Balancing (TAB) Report, pump design conditions, and pump manufacturer's performance.

	DESIGN	TAB	ACTUAL
Pump inlet pressure (kPa gauge)	_____	_____	_____
Pump outlet pressure (kPa gauge)	_____	_____	_____

c. Operate pump at shutoff and at 100 percent of designed flow when all components are in full flow. Plot test readings on pump curve and compare results against readings taken from flow measuring devices.

	SHUTOFF	100 percent
Pump inlet pressure (kPa guage)	_____	_____
Pump outlet pressure	_____	_____
Pump flow rate (L/s)	_____	_____

d. Operate pump at shutoff and at minimum flow or when all components are in full by-pass. Plot test readings on pump curve and compare results against readings taken from flow measuring devices.

	SHUTOFF	100 percent
Pump inlet pressure (kPa guage)	_____	_____
Pump outlet pressure	_____	_____
Pump flow rate (L/s)	_____	_____

2. Verify motor amperage each phase and voltage phase to phase and phase to ground for both the full flow and the minimum flow conditions.

a. Full flow:

	PHASE 1	PHASE 2	PHASE 3
Amperage	_____	_____	_____
Voltage	_____	_____	
Voltage	_____		
Voltage to ground	_____	_____	_____

b. Minimum flow:

	PHASE 1	PHASE 2	PHASE 3
Amperage	_____	_____	_____
Voltage		_____	_____
Voltage		_____	
Voltage to ground	_____	_____	_____

3. Unusual vibration, noise, etc.

_____

_____

4. Certification: We the undersigned have witnessed the above functional performance tests and certify that the item tested has met the performance requirements in this section of the specifications.

Signature and Date

Contractor's Chief Quality Control Representative
_____

Contractor's Mechanical Representative
_____

Contractor's Electrical Representative
_____

Contractor's Testing, Adjusting and Balancing
_____
Representative

Contractor's Controls Representative
_____

Contracting Officer's Representative
_____

Using Agency's Representative
_____

Functional Performance Test Checklist - Pumps

For Pump: HWP-1

Prior to performing this checklist, ensure that system is pressurized and the make-up water system is operational.

1. Activate pump start using control system commands (all possible combination, on/auto, etc.). ON_____ AUTO_____ OFF_____

a. Verify pressure drop across strainer:

Strainer inlet pressure _____ kPa
Strainer outlet pressure _____ kPa

b. Verify pump inlet/outlet pressure reading, compare to Testing, Adjusting, and Balancing (TAB) Report, pump design conditions, and pump manufacturer's performance.

	DESIGN	TAB	ACTUAL
Pump inlet pressure (kPa gauge)	_____	_____	_____
Pump outlet pressure (kPa gauge)	_____	_____	_____

c. Operate pump at shutoff and at 100 percent of designed flow when all components are in full flow. Plot test readings on pump curve and compare results against readings taken from flow measuring devices.

	SHUTOFF	100 percent
Pump inlet pressure (kPa guage)	_____	_____
Pump outlet pressure	_____	_____
Pump flow rate (L/s)	_____	_____

d. Operate pump at shutoff and at minimum flow or when all components are in full by-pass. Plot test readings on pump curve and compare results against readings taken from flow measuring devices.

	SHUTOFF	100 percent
Pump inlet pressure (kPa guage)	_____	_____
Pump outlet pressure	_____	_____
Pump flow rate (L/s)	_____	_____

2. Verify motor amperage each phase and voltage phase to phase and phase to ground for both the full flow and the minimum flow conditions.

a. Full flow:

	PHASE 1	PHASE 2	PHASE 3
Amperage	_____	_____	_____
Voltage	_____	_____	
Voltage	_____		
Voltage to ground	_____	_____	_____

b. Minimum flow:

	PHASE 1	PHASE 2	PHASE 3
Amperage	_____	_____	_____
Voltage		_____	_____
Voltage		_____	
Voltage to ground	_____	_____	_____

3. Unusual vibration, noise, etc.

_____

_____

4. Certification: We the undersigned have witnessed the above functional performance tests and certify that the item tested has met the performance requirements in this section of the specifications.

Signature and Date

Contractor's Chief Quality Control Representative
_____

Contractor's Mechanical Representative
_____

Contractor's Electrical Representative
_____

Contractor's Testing, Adjusting and Balancing
_____
Representative

Contractor's Controls Representative
_____

Contracting Officer's Representative
_____

Using Agency's Representative
_____

Functional Performance Test Checklist - Pumps

For Pump: HWP-2

Prior to performing this checklist, ensure that system is pressurized and the make-up water system is operational.

1. Activate pump start using control system commands (all possible combination, on/auto, etc.). ON_____ AUTO_____ OFF_____

a. Verify pressure drop across strainer:

Strainer inlet pressure _____ kPa
Strainer outlet pressure _____ kPa

b. Verify pump inlet/outlet pressure reading, compare to Testing, Adjusting, and Balancing (TAB) Report, pump design conditions, and pump manufacturer's performance.

	DESIGN	TAB	ACTUAL
Pump inlet pressure (kPa gauge)	_____	_____	_____
Pump outlet pressure (kPa gauge)	_____	_____	_____

c. Operate pump at shutoff and at 100 percent of designed flow when all components are in full flow. Plot test readings on pump curve and compare results against readings taken from flow measuring devices.

	SHUTOFF	100 percent
Pump inlet pressure (kPa guage)	_____	_____
Pump outlet pressure	_____	_____
Pump flow rate (L/s)	_____	_____

d. Operate pump at shutoff and at minimum flow or when all components are in full by-pass. Plot test readings on pump curve and compare results against readings taken from flow measuring devices.

	SHUTOFF	100 percent
Pump inlet pressure (kPa guage)	_____	_____
Pump outlet pressure	_____	_____
Pump flow rate (L/s)	_____	_____

2. Verify motor amperage each phase and voltage phase to phase and phase to ground for both the full flow and the minimum flow conditions.

a. Full flow:

	PHASE 1	PHASE 2	PHASE 3
Amperage	_____	_____	_____
Voltage	_____	_____	
Voltage	_____		
Voltage to ground	_____	_____	_____

b. Minimum flow:

	PHASE 1	PHASE 2	PHASE 3
Amperage	_____	_____	_____
Voltage		_____	_____
Voltage		_____	
Voltage to ground	_____	_____	_____

3. Unusual vibration, noise, etc.

_____

_____

4. Certification: We the undersigned have witnessed the above functional performance tests and certify that the item tested has met the performance requirements in this section of the specifications.

Signature and Date

Contractor's Chief Quality Control Representative
_____

Contractor's Mechanical Representative
_____

Contractor's Electrical Representative
_____

Contractor's Testing, Adjusting and Balancing
_____
Representative

Contractor's Controls Representative
_____

Contracting Officer's Representative
_____

Using Agency's Representative
_____

Functional Performance Test Checklist - VAV Terminals

The Contracting officer will select VAV terminals to be spot-checked during the functional performance test. The number of terminals shall not exceed 10 percent.

1. Functional Performance Test: Contractor shall demonstrate operation of selected VAV boxes as per specifications including the following:

a. Cooling with reheat VAV boxes:

(1) Verify VAV box response to room temperature set point adjustment. Turn thermostat to 3 degrees C above ambient and measure maximum air flow. Turn thermostat to 3 degrees C below ambient and measure minimum air flow.

Maximum flow [_____] L/s
Minimum flow [_____] L/s

(2) Check damper maximum/minimum flow settings.

Maximum flow setting [_____] L/s
Minimum flow setting [_____] L/s

Reheat coil operation range (full open to full closed) _____

b. Fan powered VAV boxes:

(1) Verify VAV box response to sensor call for heating via set point adjustment. Changes to be cooling setpoint to heating set point and return to cooling set point. _____ Verify cooling damper closes to minimum position, blower fan energizes according to sequence of operation, and upon further drop in space temperature, heating coil activation and deactivation. _____

(2) Check primary air damper maximum/minimum flow settings.

Maximum flow setting [_____] L/s
Minimum flow setting [_____] L/s

(3) Check blower fan flow. [_____] L/s

(4) Verify free operation of fan backdraft damper (insure no primary air is being discharged through the recirculated air register).
_____

(5) Verify that no recirculated air is being induced when box is in full cooling. _____

2. Certification: We the undersigned have witnessed the above functional performance tests and certify that the item tested has met the performance requirements in this section of the specifications.

Signature and Date

Contractor's Chief Quality Control Representative
_____

Contractor's Mechanical Representative
_____

Contractor's Electrical Representative
_____

Contractor's Testing, Adjusting and Balancing
_____
Representative

Contractor's Controls Representative
_____

Contracting Officer's Representative
_____

Using Agency's Representative
_____

Functional Performance Test Checklist - Variable Volume Air Handling Unit

For Air Handling Unit: AHU-1

Ensure that a slight negative pressure exists on inboard side of the outside air dampers throughout the operation of the dampers. Modulate OA, RA, and EA dampers from fully open to fully closed positions.

1. Functional Performance Test: Contractor shall verify operation of air handling unit as per specification including the following:

a. The following shall be verified when the supply and return fans operating mode is initiated:

(1) All dampers in normal position and VSD modulates to maintain the required static pressure. _____

(2) All valves in normal position. _____

(3) System safeties allow start if safety conditions are met. _____

(4) VSD shall "soft-start" fan. _____

(5) Modulate all VAV boxes to minimum air flow and verify that the static pressure does not exceed the design static pressure Class shown. _____

b. Occupied mode of operation - economizer de-energized.

(1) Outside air damper at minimum position. _____

(2) Return air damper open. _____

(3) Relief air damper at minimum position. _____

(4) Chilled water control valve modulating to maintain leaving air temperature set point. _____

(5) Fan VAV controller receiving signal from duct static pressure sensor and modulating fan to maintain supply duct static pressure set point. _____

c. Occupied mode of operation - economizer energized.

(1) Outside air damper modulated to maintain mixed air temperature set point. _____

(2) Relief air damper modulates with outside air damper according to sequence of operation. _____

(3) Chilled water control valve modulating to maintain leaving air temperature set point. _____

(4) Hot water control valve modulating to maintain leaving air temperature set point. _____

(5) Fan VAV controller receiving signal from duct static pressure sensor and modulating fan to maintain supply duct static pressure set point. _____

d. Unoccupied mode of operation

(1) All dampers in normal position. _____

(2) Verify low limit space temperature is maintained as specified in sequence of operation. _____

e. The following shall be verified when the supply and return fans off mode is initiated:

(1) All dampers in normal position. _____

(2) All valves in normal position. _____

(3) Fan de-energizes. _____

f. Verify the chilled water coil control valve operation by setting all VAV's to maximum and minimum cooling.

	Max cooling	Min cooling
Supply air volume (_____ L/s)	_____	_____
Supply air temp. (_____ degrees C)	_____	_____

g. Verify safety shut down initiated by smoke detectors. _____

h. Verify safety shut down initiated by low temperature protection thermostat. _____

2. Certification: We the undersigned have witnessed the above functional performance tests and certify that the item tested has met the performance requirements in this section of the specifications.

Signature and Date

Contractor's Chief Quality Control Representative
_____

Contractor's Mechanical Representative
_____

Contractor's Electrical Representative
_____

Contractor's Testing, Adjusting and Balancing
_____
Representative

Contractor's Controls Representative
_____

Contracting Officer's Representative
_____

Using Agency's Representative
_____

Functional Performance Test Checklist - Variable Volume Air Handling Unit

For Air Handling Unit: AHU-2

Ensure that a slight negative pressure exists on inboard side of the outside air dampers throughout the operation of the dampers. Modulate OA, RA, and EA dampers from fully open to fully closed positions.

1. Functional Performance Test: Contractor shall verify operation of air handling unit as per specification including the following:

a. The following shall be verified when the supply and return fans operating mode is initiated:

(1) All dampers in normal position and VSD modulates to maintain the required static pressure. _____

(2) All valves in normal position. _____

(3) System safeties allow start if safety conditions are met. _____

(4) VSD shall "soft-start" fan. _____

(5) Modulate all VAV boxes to minimum air flow and verify that the static pressure does not exceed the design static pressure Class shown. _____

b. Occupied mode of operation - economizer de-energized.

(1) Outside air damper at minimum position. _____

(2) Return air damper open. _____

(3) Relief air damper at minimum position. _____

(4) Chilled water control valve modulating to maintain leaving air temperature set point. _____

(5) Fan VAV controller receiving signal from duct static pressure sensor and modulating fan to maintain supply duct static pressure set point. _____

c. Occupied mode of operation - economizer energized.

(1) Outside air damper modulated to maintain mixed air temperature set point. _____

(2) Relief air damper modulates with outside air damper according to sequence of operation. _____

(3) Chilled water control valve modulating to maintain leaving air temperature set point. _____

(4) Hot water control valve modulating to maintain leaving air temperature set point. _____

(5) Fan VAV controller receiving signal from duct static pressure sensor and modulating fan to maintain supply duct static pressure set point. _____

d. Unoccupied mode of operation

(1) All dampers in normal position. _____

(2) Verify low limit space temperature is maintained as specified in sequence of operation. _____

e. The following shall be verified when the supply and return fans off mode is initiated:

(1) All dampers in normal position. _____

(2) All valves in normal position. _____

(3) Fan de-energizes. _____

f. Verify the chilled water coil control valve operation by setting all VAV's to maximum and minimum cooling.

	Max cooling	Min cooling
Supply air volume (_____ L/s)	_____	_____
Supply air temp. (_____ degrees C)	_____	_____

g. Verify safety shut down initiated by smoke detectors. _____

h. Verify safety shut down initiated by low temperature protection thermostat. _____

2. Certification: We the undersigned have witnessed the above functional performance tests and certify that the item tested has met the performance requirements in this section of the specifications.

	Signature and Date
Contractor's Chief Quality Control Representative	_____
Contractor's Mechanical Representative	_____
Contractor's Electrical Representative	_____
Contractor's Testing, Adjusting and Balancing Representative	_____
Contractor's Controls Representative	_____
Contracting Officer's Representative	_____
Using Agency's Representative	_____

Functional Performance Test Checklist - Packaged Air Cooled Chiller

For Chiller: CH-1

1. Functional Performance Test: Contractor shall demonstrate operation of chilled water system as per specifications including the following: Start building air handler to provide load for chiller. Activate controls system chiller start sequence as follows.

a. Start chilled water pump and establish chilled water flow. Verify chiller-chilled water proof-of-flow switch operation. _____

b. Verify control system energizes chiller start sequence. _____

c. Verify chiller senses chilled water temperature above set point and control system activates chiller start. _____

d. Verify functioning of "soft start" sequence. _____

e. Shut off air handling equipment to remove load on chilled water system. Verify chiller shutdown sequence is initiated and accomplished after load is removed. _____

f. Restart air handling equipment one minute after chiller shut down. Verify chiller restart sequence. _____

2. Verify chiller inlet/outlet pressure reading, compare to Testing, Adjusting, and Balancing (TAB) Report, chiller design conditions, and chiller manufacturer's performance data.

	DESIGN	TAB	ACTUAL
Chiller inlet pressure (kPa gauge)	_____	_____	_____
Chiller outlet pressure (kPa gauge)	_____	_____	_____

3. Verify chiller amperage each phase and voltage phase-to-phase and phase-to-ground.

	PHASE 1	PHASE 2	PHASE 3
Amperage	_____	_____	_____
Voltage	_____	_____	
Voltage	_____		
Voltage to ground	_____	_____	_____

4. Record the following information:

Ambient dry bulb temperature _____ degrees C
Ambient wet bulb temperature _____ degrees C
Entering chilled water temperature _____degrees C
Leaving chilled water temperature _____ degrees C

5. Unusual vibration, noise, etc.

_____

_____

6. Certification: We the undersigned have witnessed the above functional performance tests and certify that the item tested has met the performance requirements in this section of the specifications.

Signature and Date

Contractor's Chief Quality Control Representative
_____

Contractor's Mechanical Representative
_____

Contractor's Electrical Representative
_____

Contractor's Testing, Adjusting and Balancing
_____
Representative

Contractor's Controls Representative
_____

Contracting Officer's Representative
_____

Using Agency's Representative
_____

Functional Performance Test Checklist - Hot Water Boiler

For Boiler: B-1

1. Functional Performance Test: Contractor shall demonstrate operation of hot water system as per specifications including the following: Start building heating equipment to provide load for boiler. Activate controls system boiler start sequence as follows.

a. Start hot water pump and establish hot water flow. Verify boiler hot water proof-of-flow switch operation. _____

b. Verify control system energizes boiler start sequence. _____

c. Verify boiler senses hot water temperature below set point and control system activates boiler start. _____

d. Shut off building heating equipment to remove load on hot water system. Verify boiler shutdown sequence is initiated and accomplished after load is removed. _____

2. Verify boiler inlet/outlet pressure reading, compare to Test and Balance (TAB) Report, boiler design conditions, and boiler manufacturer's performance data.

	DESIGN	TAB	ACTUAL
Boiler inlet pressure (kPa gauge)	_____	_____	_____
Boiler outlet pressure (kPa gauge)	_____	_____	_____
Boiler flow rate (L/s)	_____	_____	_____
Flue-gas temperature at boiler outlet		_____	_____
Percent carbon dioxide in flue-gas		_____	_____
Draft at boiler flue-gas exit		_____	_____
Draft or pressure in furnace		_____	_____
Stack emission pollutants concentration	_____	_____	_____
Fuel type	_____	_____	_____
Combustion efficiency	_____	_____	_____

3. Record the following information:

Ambient temperature	_____	degrees C
Entering hot water temperature	_____	degrees C
Leaving hot water temperature	_____	degrees C

4. Verify temperatures in item 3 are in accordance with the reset schedule. _____

5. Verify proper operation of boiler safeties. _____

6. Unusual vibration, noise, etc.

_____

_____

7. Visually check refractory for cracks or spalling and refractory and tubes for flame impingement. _____

8. Certification: We the undersigned have witnessed the above functional performance tests and certify that the item tested has met the performance requirements in this section of the specifications.

Signature and Date

Contractor's Chief Quality Control Representative
_____

Contractor's Mechanical Representative
_____

Contractor's Electrical Representative
_____

Contractor's Testing, Adjusting and Balancing
_____
Representative

Contractor's Controls Representative
_____

Contracting Officer's Representative
_____

Using Agency's Representative
_____

Functional Performance Test Checklist - Hot Water Boiler

For Boiler: B-2

1. Functional Performance Test: Contractor shall demonstrate operation of hot water system as per specifications including the following: Start building heating equipment to provide load for boiler. Activate controls system boiler start sequence as follows.

a. Start hot water pump and establish hot water flow. Verify boiler hot water proof-of-flow switch operation. _____

b. Verify control system energizes boiler start sequence. _____

c. Verify boiler senses hot water temperature below set point and control system activates boiler start. _____

d. Shut off building heating equipment to remove load on hot water system. Verify boiler shutdown sequence is initiated and accomplished after load is removed. _____

2. Verify boiler inlet/outlet pressure reading, compare to Test and Balance (TAB) Report, boiler design conditions, and boiler manufacturer's performance data.

	DESIGN	TAB	ACTUAL
Boiler inlet pressure (kPa gauge)	_____	_____	_____
Boiler outlet pressure (kPa gauge)	_____	_____	_____
Boiler flow rate (L/s)	_____	_____	_____
Flue-gas temperature at boiler outlet		_____	_____
Percent carbon dioxide in flue-gas		_____	_____
Draft at boiler flue-gas exit		_____	_____
Draft or pressure in furnace		_____	_____
Stack emission pollutants concentration	_____	_____	_____
Fuel type	_____	_____	_____
Combustion efficiency	_____	_____	_____

3. Record the following information:

Ambient temperature	_____	degrees C
Entering hot water temperature	_____	degrees C
Leaving hot water temperature	_____	degrees C

4. Verify temperatures in item 3 are in accordance with the reset schedule. _____

5. Verify proper operation of boiler safeties. _____

6. Unusual vibration, noise, etc.

_____

_____

7. Visually check refractory for cracks or spalling and refractory and tubes for flame impingement. _____

8. Certification: We the undersigned have witnessed the above functional performance tests and certify that the item tested has met the performance requirements in this section of the specifications.

Signature and Date

Contractor's Chief Quality Control Representative
_____

Contractor's Mechanical Representative
_____

Contractor's Electrical Representative
_____

Contractor's Testing, Adjusting and Balancing
_____
Representative

Contractor's Controls Representative
_____

Contracting Officer's Representative
_____

Using Agency's Representative
_____

Functional Performance Test Checklist - Unit Heaters

1. Functional Performance Test: Contractor shall demonstrate operation of selected unit heaters as per specifications including the following:

a. Verify unit heater response to room temperature set point adjustment. Changes to be heating set point to heating set point minus 10 degrees and return to heating set point. _____

b. Check blower fan speed. _____rpm

c. Check heating mode inlet air temperature. _____ degrees C

d. Check heating mode outlet air temperature. _____ degrees C

2. Certification: We the undersigned have witnessed the above functional performance tests and certify that the item tested has met the performance requirements in this section of the specifications.

Signature and Date

Contractor's Chief Quality Control Representative
_____

Contractor's Mechanical Representative
_____

Contractor's Electrical Representative
_____

Contractor's Testing, Adjusting and Balancing
_____
Representative

Contractor's Controls Representative
_____

Contracting Officer's Representative
_____

Using Agency's Representative
_____

Functional Performance Test Checklist - HVAC Controls

For HVAC Systems:

The Contracting Officer will select HVAC control systems to undergo functional performance testing. The number of systems shall not exceed 10 percent.

1. Functional Performance Test: Contractor shall verify operation of HVAC controls by performing the following tests:

a. Verify that controller is maintaining the set point by manually measuring the controlled variable with a thermometer, sling psychrometer, inclined manometer, etc.

b. Verify sensor/controller combination by manually measuring the controlled medium. Take readings from control panel display and compare readings taken manually. Record all readings.

Sensor _____
Manual measurement _____
Panel reading value _____

c. Verify system stability by changing the controller set point as follows:

(1) Air temperature - 10 degrees F

(2) Water temperature - 10 degrees F

(3) Static pressure - 10 percent of set point

(4) Relative humidity - percent (RH)

The control system shall be observed for 10 minutes after the change in set point. Instability or excessive hunting will be unacceptable.

d. Verify interlock with other HVAC controls.

e. Verify interlock with fire alarm control panel.

f. Verify interlock with EMCS.

2. Verify that operation of control system conforms to that specified in the sequence of operation.

3. Certification: We the undersigned have witnessed the above functional performance tests and certify that the item tested has met the performance requirements in this section of the specifications.

Signature and Date

Contractor's Chief Quality Control Representative
_____

Contractor's Mechanical Representative
_____

Contractor's Electrical Representative
_____

Contractor's Testing, Adjusting and Balancing
_____
Representative

Contractor's Controls Representative
_____

Contractor's Officer's Representative
_____

Using Agency's Representative
_____

END OF SECTION

SECTION 16370

ELECTRICAL DISTRIBUTION SYSTEM, AERIAL

1 GENERAL

1.1 REFERENCES

The publications listed below form a part of this specification to the extent referenced. The publications are referred to in the text by basic designation only.

AMERICAN NATIONAL STANDARDS INSTITUTE (ANSI)

ANSI C29.1	(1988) Electrical Power Insulators - Test Methods
ANSI C29.2	(1992) Insulators - Wet-Process Porcelain and Toughened Glass - Suspension Type
ANSI C29.3	(1986) Wet Process Porcelain Insulators - Spool Type
ANSI C29.4	(1989) Wet-Process Porcelain Insulators - Strain Type
ANSI C29.5	(1984; R 1991) Wet-Process Porcelain Insulators - Low- and Medium-Voltage Types
ANSI C29.6	(1984) Wet-Process Porcelain Insulators - High-Voltage Pin Type
ANSI C29.8	(1985) Wet-Process Porcelain Insulators - Apparatus, Cap and Pin Type
ANSI C29.9	(1983) Wet-Process Porcelain Insulators - Apparatus, Post-Type
ANSI C37.32	(1990) High-Voltage Air Switches, Bus Supports, and Switch Accessories - Schedules of Preferred Ratings, Manufacturing Specifications, and Application Guide
ANSI C57.12.20	(1994) Transformers, Overhead-Type Distribution Transformers, 500 kVA and Smaller: High Voltage, 34 500 Volts and Below; Low Voltage, 7970/13 800Y Volts and Below
ANSI C135.1	(1979) Galvanized Steel Bolts and Nuts for Overhead Line Construction
ANSI C135.2	(1987) Threaded Zinc-Coated Ferrous Strand-Eye Anchor Rods and Nuts for Overhead Line Construction

ANSI C135.4	(1987) Zinc-Coated Ferrous Eyebolts and Nuts for Overhead Line Construction
ANSI C135.14	(1979) Staples with Rolled or Slash Points for Overhead Line Construction
ANSI C135.17	(1988) Insulator Pins with Lead Threads for Overhead Line Construction Galvanized Ferrous Bolt-Type
ANSI C135.22	(1988) Galvanized Ferrous Pole-Top Insulator Pins with Lead Threads for Overhead Line Construction
ANSI C135.30	(1988) Zinc-Coated Ferrous Ground Rods for Overhead or Underground Line Construction
ANSI C135.33	(1988) Crossarm Gains, Galvanized Ferrous
ANSI O5.1	(1992) Specifications and Dimensions for Wood Poles

AMERICAN SOCIETY FOR TESTING AND MATERIALS (ASTM)

ASTM A 36	(1994) Carbon Structural Steel
ASTM A 123	(1989a) Zinc (Hot-Dip Galvanized) Coatings on Iron and Steel Products
ASTM A 153	(1996) Zinc Coating (Hot-Dip) on Iron and Steel Hardware
ASTM A 475	(1995) Zinc-Coated Steel Wire Strand
ASTM A 575	(1989) Steel Bars, Carbon, Merchant Quality, M-Grades
ASTM A 576	(1990b) Steel Bars, Carbon, Hot-Wrought, Special Quality
ASTM B 1	(1990) Hard-Drawn Copper Wire
ASTM B 8	(1993) Concentric-Lay-Stranded Copper Conductors, Hard, Medium-Hard, or Soft
ASTM B 117	(1994) Operating Salt Spray (Fog) Testing Apparatus
ASTM B 228	(1993) Concentric-Lay-Stranded Copper-Clad Steel Conductors
ASTM B 230	(1989) Aluminum 1350-H19 Wire for Electrical Purposes
ASTM B 231	(1990) Concentric-Lay-Stranded Aluminum 1350 Conductors

ASTM B 232	(1992) Concentric-Lay-Stranded Aluminum Conductors, Coated-Steel Reinforced (ACSR)
ASTM B 398	(1990) Aluminum-Alloy 6201-T81 Wire for Electrical Purposes
ASTM B 399	(1992) Concentric-Lay-Stranded Aluminum-Alloy 6201-T81 Conductors
ASTM B 416	(1993) Concentric-Lay-Stranded Aluminum-Clad Steel Conductors
ASTM D 923	(1991) Sampling Electrical Insulating Liquids
ASTM D 1654	(1992) Evaluation of Painted or Coated Specimens Subjected to Corrosive Environment
ASTM D 4059	(1991) Analysis of Polychlorinated Biphenyls in Insulating Liquids by Gas Chromatography.
ASTM F 883	(1990) Padlocks

AMERICAN WOOD-PRESERVERS' ASSOCIATION (AWPA)

AWPA C4	(1995) Poles - Preservative Treatment by Pressure Processes
AWPA C25	(1995) Sawn Crossarms - Preservative Treatment by Pressure Processes
AWPA P1/P13	(1995) Standard for Coal Tar Creosote for Land and Fresh Water and Marine (Coastal Water Use)
AWPA P5	(1995) Standards for Waterborne Preservatives
AWPA P8	(1995) Standards for Oil-Borne Preservatives
AWPA P9	(1992) Standards for Solvents and Formulations for Organic Preservative Systems

INSTITUTE OF ELECTRICAL AND ELECTRONIC ENGINEERS (IEEE)

IEEE C2	(1997) National Electrical Safety Code
IEEE C37.34	(1994) Test Code for High-Voltage Air Switches
IEEE C37.41	(1994) Design Tests for High-Voltage Fuses, Distribution Enclosed Single-Pole Air Switches, Fuse Disconnecting Switches, and Accessories
IEEE C37.60	(1981; R 1992) Requirements for Overhead, Pad Mounted, Dry Vault and Submersible Automatic Circuit Reclosers and Fault Interrupters for ac Systems

IEEE C37.63	(1984; R 1990) Requirements for Overhead, Pad-Mounted, Dry-Vault, and Submersible Automatic Line Sectionalizer for AC Systems
IEEE C57.12.00	(1993) IEEE Standard General Requirements for Liquid-Immersed Distribution, Power, and Regulating Transformers
IEEE C57.13.2	(1991) IEEE Standard Conformance Test Procedures for Instrument Transformers
IEEE C57.15	(1986; R 1992) Requirements, Terminology, and Test Code for Step-Voltage and Induction-Voltage Regulators
IEEE C57.19.00	(1991) IEEE Standard General Requirements and Test Procedures for Outdoor Power Apparatus Bushings
IEEE C57.19.01	(1991) IEEE Standard Performance Characteristics and Dimensions for Outdoor Apparatus Bushings
IEEE C57.98	(1993) Guide for Transformer Impulse Tests
IEEE C62.1	(1989; R 1994) Surge Arresters for ac Power Circuits
IEEE C62.2	(1987; R 1994) Guide for the Application of Gapped Silicon-Carbide Surge Arresters for Alternating Current Systems
IEEE C62.11	(1993) IEEE Standard Metal-Oxide Surge Arresters for AC Power Circuits
IEEE Std 18	(1980; R 1993) Shunt Power Capacitors
IEEE Std 81	(1983) Guide for Measuring Earth Resistivity, Ground Impedance, and Earth Surface Potentials of a Ground System (Part 1)
IEEE Std 100	(1992) IEEE Standard Dictionary of Electrical and Electronics Terms
IEEE Std 242	(1986; R 1991) Recommended Practice for Protection and coordination of Industrial and Commercial Power Systems
IEEE Std 399	(1990) Recommended Pratice for Power Systems Analysis
IEEE Std 404	(1993) Cable Joints for Use with Extruded Dielectric Cable Rated 5000 V Through 46 000 V and Cable Joints for Use with Laminated Dielectric Cable Rated 2500 V Through 500 000 V

INSULATED CABLE ENGINEERING ASSOCIATION (ICEA)

ICEA S-70-547	(1992) Weather Resistant Polyolefin Covered Wire and Cable

NATIONAL ELECTRICAL MANUFACTURERS ASSOCIATION (NEMA)

NEMA ICS 6	(1993) Enclosures for Industrial Control and Systems
NEMA HV 2	(1984; R 1991) Application Guide for Ceramic Suspension Insulators
NEMA LA 1	(1992) Surge Arresters
NEMA SG 2	(1993) High Voltage Fuses
NEMA WC 5	(1992; Rev 1) Thermoplastic-Insulated Wire and Cable for the Transmission and Distribution of Electrical Energy
NEMA WC 7	(1993) Cross-Linked-Thermosetting-Polyethylene- Insulated Wire and Cable for the Transmission and Distribution of Electrical Energy
NEMA WC 8	(1993) Ethylene-Propylene-Rubber-Insulated Wire and Cable for the Transmission and Distribution of Electrical Energy

NATIONAL FIRE PROTECTION ASSOCIATION (NFPA)

NFPA 70	(1996) National Electrical Code

RURAL ELECTRIFICATION ADMINISTRATION (REA)

REA Bulletin 1728H-701	(1993) REA Specification for Wood Crossarms (Solid and Laminated), Transmission Timbers and Pole Keys

UNDERWRITERS LABORATORIES (UL)

UL 467	(1993; Rev thru Aug 1996) Grounding and Bonding Equipment
UL 486A	(1991; Rev Oct 1991) Wire Connectors and Soldering Lugs for Use with Copper Conductors
UL 486B	(1991; Rev thru Oct 1996) Wire Connectors for Use with Aluminum Conductors

1.2 GENERAL REQUIREMENTS

1.2.1 Terminology

Terminology used in this specification is as defined in IEEE Std 100.

1.2.2 Service Conditions

Items provided under this section shall be specifically suitable for the following service conditions.

a. Altitude 500 feet

b. Ambient Temperature 150 degrees F

c. Frequency 60

d. Seismic Zone 3

1.3 SUBMITTALS

Government approval is required for submittals with a "GA" designation; submittals having an "FIO" designation are for information only. The following shall be submitted in accordance with Section 01330 SUBMITTAL PROCEDURES:

SD-01 Data

Manufacturer's Catalog; FIO.

Catalog cuts, brochures, circulars, specifications, product data, and printed information in sufficient detail and scope to verify compliance with the requirements of the contract documents.

Material, Equipment, and Fixture Lists; GA.

A complete itemized listing of equipment and materials proposed for incorporation into the work. Each entry shall include the item number, the quantity of items proposed, and the name of the manufacturer of the item.

SD-04 Drawings

Electrical Distribution System; GA.

Detail drawings consisting of equipment drawings, illustrations, schedules, instructions, diagrams and other information necessary to define the installation and enable the Government to check conformity with the requirements of the contract drawings. Detail drawings shall as a minimum include:

a. Poles.

b. Crossarms.

c. Conductors.

d. Insulators.

If departures from the contract drawings are deemed necessary by the Contractor, complete details of such departures shall be submitted with the detail drawings. Approved departures shall be made at no additional cost to the Government.

Detail drawings shall show how components are assembled, function together and how they will be installed on the project. Data and drawings for component parts of an item or system shall be coordinated and submitted as a unit. Data and drawings shall be coordinated and included in a single submission. Multiple submissions for the same equipment or system are not acceptable except where prior approval has been obtained from the Contracting Officer. In such cases, a list of data to be submitted later shall be included with the first submission. Detail drawings shall consist of the following:

a. Detail drawings showing physical arrangement, construction details, connections, finishes, materials used in fabrication, physical size, electrical characteristics, and foundation and support details. Drawings shall be drawn to scale and/or dimensioned. Optional items shall be clearly identified as included or excluded.

As-Built Drawings; GA.

The as-built drawings shall be a record of the construction as installed. The drawings shall include the information shown on the contract drawings as well as deviations, modifications, and changes from the contract drawings, however minor. The as-built drawings shall be kept at the job site and updated daily. The as-built drawings shall be a full sized set of prints marked to reflect deviations, modifications, and changes. The as-built drawings shall be complete and show the location, dimensions, part identification, and other information. Additional sheets may be added. The as-built drawings shall be jointly inspected for accuracy and completeness by the Contractor's quality control representative and by the Contracting Officer prior to the submission of each monthly pay estimate. Upon completion of the work, the Contractor shall submit three full sized sets of the marked prints to the Contracting Officer for approval. If upon review, the as-built drawings are found to contain errors and/or omissions, they will be returned to the Contractor for correction. The Contractor shall correct and return the as-built drawings to the Contracting Officer for approval within ten calendar days from the time the drawings are returned to the Contractor.

SD-09 Reports

Factory Test; FIO.

Certified factory test reports shall be submitted when the manufacturer performs routine factory tests, including tests required by standards listed in paragraph REFERENCES. Results of factory tests performed shall be certified by the manufacturer, or an approved testing laboratory, and submitted within 7 days following successful completion of the tests specified in applicable publications or in these specifications.

Field Testing; GA.

A proposed field test plan 20 days prior to testing the installed system. No field test shall be performed until the test plan is approved. The test plan shall consist of complete field test procedures including tests to be performed, test equipment required, and tolerance limits.

Test Reports; GA.

Six copies of the information described below in 8-1/2 by 11 inch binders having a minimum of 5 rings, and including a separate section for each test. Sections shall be separated by heavy plastic dividers with tabs.

a. A list of equipment used, with calibration certifications.

b. A copy of measurements taken.

c. The dates of testing.

d. The equipment and values to be verified.

e. The condition specified for the test.

f. The test results, signed and dated.

g. A description of adjustments made.

SD-13 Certificates

Materials and Equipment; GA.

Where materials or equipment are specified to conform to the standards of the Underwriters Laboratories (UL) or to be constructed or tested, or both, in accordance with the standards of the American National Standards Institute (ANSI), the Institute of Electrical and Electronic Engineers (IEEE), or the National Electrical Manufacturers Association (NEMA), the Contractor shall submit proof that the items provided under this section of the specifications conform to such requirements. The label of, or listing by, UL will be acceptable as evidence that the items conform thereto. Either a certification or a published catalog specification data statement, to the effect that the item is in accordance with the referenced ANSI or IEEE standard, will be acceptable as evidence that the item conforms thereto. A similar certification or published catalog specification data statement to the effect that the item is in accordance with the referenced NEMA standard, by a company listed as a member company of NEMA, will be acceptable as evidence that the item conforms thereto. In lieu of such certification or published data, the Contractor may submit a certificate from a recognized testing agency equipped and competent to perform such services, stating that the items have been tested and that they conform to the requirements listed, including methods of testing of the specified agencies.

SD-19 Operation and Maintenance Manuals

Electrical Distribution System; GA.

Six copies of Operation and Maintenance manuals electrical distribution system shall be provided, within 7 calendar days following the completion of tests and shall include assembly, installation, operation and maintenance instructions, spare parts data which provides supplier name, current cost, catalog order number, and a recommended list of spare parts to be stocked. Manuals shall also include data outlining detailed procedures for system startup and operation, and a troubleshooting guide which lists possible operational problems and corrective action to be taken. A brief description of all equipment, basic operating features, and routine maintenance

requirements shall also be included. Documents shall be bound in a binder marked or identified on the spine and front cover. A table of contents page shall be included and marked with pertinent contract information and contents of the manual. Tabs shall be provided to separate different types of documents, such as catalog ordering information, drawings, instructions, and spare-parts data. Index sheets shall be provided for each section of the manual when warranted by the quantity of documents included under separate tabs or dividers. Three additional copies of the instructions manual shall be provided within 30 calendar days following the manuals.

Three additional copies of the instructions manual within 30 calendar days following the approval of the manuals.

1.4 DELIVERY, STORAGE, AND HANDLING

Devices and equipment shall be visually inspected by the Contractor when received and prior to acceptance from conveyance. Stored items shall be protected from the environment in accordance with the manufacturer's published instructions. Damaged items shall be replaced. Wood poles held in storage for more than 2 weeks shall be stored in accordance with ANSI O5.1. Handling of wood poles shall be in accordance with ANSI O5.1, except that pointed tools capable of producing indentations more than one inch in depth shall not be used.

1.5 EXTRA MATERIALS

Two complete sets of all special tools required for maintenance shall be provided, complete with a suitable tool box. Special tools are those that only the manufacturer provides, for special purposes (to access compartments, or operate, adjust, or maintain special parts).

2 PRODUCTS

2.1 GENERAL REQUIREMENTS

Products shall conform to the following requirements. Items of the same classification shall be identical including equipment, assemblies, parts, and components.

2.2 STANDARD PRODUCT

Material and equipment shall be the standard product of a manufacturer regularly engaged in the manufacture of the product and shall essentially duplicate items that have been in satisfactory use for at least 2 years prior to bid opening.

2.3 NAMEPLATES

2.3.1 General

Each major component shall have the manufacturer's name, address, type or style, model or serial number, and catalog number on a nameplate securely attached to the equipment. Nameplates shall be made of noncorrosive metal.

2.4 CORROSION PROTECTION

2.4.1 Aluminum Materials

Aluminum shall not be used in contact with earth or concrete. Where aluminum conductors are connected to dissimilar metal, fittings conforming to UL 486B shall be used.

2.4.2 Ferrous Metal Materials

2.4.2.1 Hardware

Ferrous metal hardware shall be hot-dip galvanized in accordance with ASTM A 153 and ASTM A 123.

2.5 CONDUCTORS, CONNECTORS, AND SPLICES

2.5.1 Copper Conductors

Hard-drawn-copper conductors shall comply with ASTM B 1 and ASTM B 8 as appropriate for the conductor size.

2.5.2 Connectors and Splices

Connectors and splices shall be of copper alloys for copper conductors, and a type designed to minimize galvanic corrosion for copper to aluminum-composition conductors. Aluminum-composition and aluminum-composition to copper shall comply with UL 486B, and copper-to-copper shall comply with UL 486A.

2.6 MEDIUM-VOLTAGE LINES

2.6.1 Bare Medium-Voltage Lines

Bare medium-voltage line conductors shall be hard-drawn-copper, CU. Conductor types shall not be mixed on any project, unless specifically indicated. Conductors larger than No. 2 AWG shall be stranded.

2.7 POLES AND HARDWARE

Poles shall be of wood, 45 feet in length, Class 2.

2.7.1 Wood Poles

Wood poles shall comply with ANSI O5.1, and shall be pressure treated in accordance with AWPA C4, with creosote conforming to AWPA P1/P13or with oil-borne preservatives and petroleum conforming to AWPA P8 and AWPA P9, respectively, and waterborne preservatives conforming to AWPA P5. Waterborne preservatives shall be either chromated or ammoniacal copper arsenate. Any species listed in ANSI O5.1 for which a preservative treatment is not specified in AWPA C4, shall not be used; northern white cedar, if treated as specified for western red cedar, and western fir, if treated as specified for Douglas fir, may be used. Wood poles shall have pole markings located approximately 10 feet from pole butts for poles 50 feet or less in length, and 14 feet from the pole butts for poles longer than 55 feet in length. Poles shall be machine trimmed by turning smooth full length, and shall be roofed, gained, and bored prior to pressure

treatment. Where poles are not provided with factory-cut gains, metal gain plates shall be provided.

2.7.2 Pole Line Hardware

Zinc-coated hardware shall comply with ANSI C135.1, ANSI C135.2, ANSI C135.4, ANSI C135.14, ANSI C135.17, ANSI C135.22, and ANSI C135.33. Steel hardware shall comply with ASTM A 575 and ASTM A 576. Hardware shall be hot-dip galvanized in accordance with ASTM A 153. Pole-line hardware shall be hot-dip galvanized steel. Washers shall be installed under boltheads and nuts on wood surfaces and elsewhere as required. Washers used on through-bolts and double-arming bolts shall be approximately 2-1/4 inches square and 3/16 inch thick. The diameter of holes in washers shall be the correct standard size for the bolt on which a washer is used. Washers for use under heads of carriage-bolts shall be of the proper size to fit over square shanks of bolts. Eye bolts, bolt eyes, eyenuts, strain-load plates, lag screws, guy clamps, fasteners, hooks, shims, and clevises shall be used wherever required to support and to protect poles, brackets, crossarms, guy wires, and insulators.

2.7.3 Guy Assemblies

Guy assemblies shall be zinc-coated steel in accordance with ASTM A 475. Guy assemblies, including insulators and attachments, shall provide a strength exceeding the required guy strength. Three-eye thimbles shall be provided on anchor rods to permit attachment of individual primary, secondary, and communication down guys. Anchors shall provide adequate strength to support all loads. Guy strand shall be 7 strand. Guy material shall be zinc-coated-steel utilities grade. Guy rods shall be not less than 8 feet in length by 3/4 inch in diameter.

2.8 INSULATORS

Insulators shall comply with NEMA HV 2 for general requirements. Suspension insulators shall be used at corners, angles, dead-ends, other areas where line insulators do not provide adequate strength, and as indicated. Mechanical strength of suspension insulators and hardware shall exceed the rated breaking strength of the attached conductors.

2.8.1 Medium-Voltage Line Insulators

Medium-voltage line insulators shall comply with ANSI C29.2, ANSI C29.5, and ANSI C29.6, and as applicable. Ratings shall not be lower than the ANSI classes indicated in TABLE I. Horizontal line-post insulators shall be used for armless construction and shall have the same mechanical and electrical ratings as vertical line-post insulators for the ANSI class indicated, but shall be modified to be suitable for horizontal installation. Where line-post insulators are used for angles greater than 15 degrees, clamp-top fittings shall be provided as well as for other locations shown. Conductor clamps for use with clamp-top, line-post insulators shall be hot-dip galvanized malleable iron for copper conductors and aluminum alloy for aluminum-composition conductors. Either line-post or pin insulators may be used for crossarm construction. Pin insulators for use on voltages in excess of 6 kV phase-to-phase shall be radio-interference-freed or else line-post insulators shall be used.

TABLE I

MINIMUM ANSI RATING OF MEDIUM-VOLTAGE INSULATORS BY CLASS

Voltage Level	Line-Post	Pin	Suspension
6 kV to 15 kV	57-2 or 12	56-3	Two 52-3 or 4

2.8.2 Strain Insulators for Guy Wires

Strain insulators for use in insulated guy assemblies shall comply with ANSI C29.4 for porcelain or equivalent fiberglass, and shall have a mechanical strength exceeding the rated breaking strength of the attached guy wire. Insulators shall be not smaller than Class 54-3 for lines of 6 kV to 15 kV.

2.8.3 Apparatus Insulators

Apparatus insulators shall comply with IEEE C57.19.00, IEEE C57.19.01, ANSI C29.8, and ANSI C29.9 as applicable.

2.9 CROSSARM ASSEMBLIES

2.9.1 Crossarms

Crossarms shall comply with REA Bulletin 1728H-701 and shall be solid wood, distribution type, except cross-sectional area with pressure treatment conforming to AWPA C25, and a 1/4 inch, 45 degree chamfer on all top edges. Cross-sectional area minimum dimensions shall be 4-1/4 inches in height by 3-l/4 inches in depth in accordance with IEEE C2 for Grade B construction. Crossarms shall be 8 feet in length. Crossarms shall be machined, chamfered, trimmed, and bored for stud and bolt holes before pressure treatment. Factory drilling shall be provided for pole and brace mounting, for four pin or four vertical line-post insulators, and for four suspension insulators, except where otherwise indicated or required. Drilling shall provide required climbing space and wire clearances. Crossarms shall be straight and free of twists to within 1/10 inch per foot of length. Bend or twist shall be in one direction only.

2.9.2 Crossarm Gains

Crossarm gains shall comply with ANSI C135.33.

2.10 GROUNDING AND BONDING

2.10.1 Driven Ground Rods

Ground rods shall be of copper-clad steel conforming to UL 467 not less than 3/4 inch in diameter by 10 feet in length of the sectional type driven full length into the earth.

2.10.2 Grounding Conductors

Grounding conductors shall be bare, except where installed in conduit with associated phase conductors. Insulated conductors shall be of the same material as the phase conductors and green color-coded, except that conductors shall be rated no more than 600 volts. Bare conductors shall be ASTM B 8 soft-drawn unless otherwise indicated. Aluminum is not acceptable.

2.11 FACTORY TESTS

Factory tests shall be performed, as follows, in accordance with the applicable publications and with other requirements of these specifications. The Contracting Officer shall be notified at least 10 days before the equipment is ready for testing.

a. Electric Power Insulators: Manufacturer's standard tests in accordance with ANSI C29.1.

3 EXECUTION

3.1 GENERAL INSTALLATION REQUIREMENTS

Equipment and devices shall be installed and energized in accordance with the manufacturer's published instructions. Splices and terminations for medium-voltage cable shall conform to the requirements of Section 16375 ELECTRICAL DISTRIBUTION SYSTEM, UNDERGROUND.

3.1.1 Conformance to Codes

The installation shall comply with the requirements and recommendations of IEEE C2 for medium loading districts, Grade B construction. No reduction in clearance shall be made. The installation shall also comply with the applicable parts of NFPA 70.

3.1.2 Verification of Dimensions

The Contractor shall become familiar with details of the work, shall verify dimensions in the field, and shall notify the Contracting Officer of any discrepancy before performing any work.

3.2 POLE INSTALLATION

Electric poles for overhead electric shall be wood poles utilizing crossarm construction. Crossarm construction shall be provided for support of other equipment, except where direct-pole mounting is indicated. Provision for communication services is required on pole-line construction, except where specifically noted otherwise.

3.2.1 Wood Pole Setting

Wood Pole Setting: Wood poles shall be set straight and firm. In normal firm ground, minimum pole-setting depths shall be as listed in Table II. Poles in straight runs shall be in a straight line. Curved poles shall be placed with curvatures in the direction of the pole line. Poles shall be set to maintain as even a grade as practicable. When the average ground run is level, consecutive poles shall not vary more than 5 feet in height. When the ground is uneven, poles differing in length shall be kept to a minimum by locating poles to avoid the highest and lowest ground points. If it becomes necessary to shorten a pole, a piece shall be sawed off the top end and roofed. If any pole is shortened after treatment, the shortened end of the pole shall be given an application of hot preservative. Holes shall be dug large enough to permit proper use of tampers to the full depth of a hole. Earth shall be placed into the hole in 6 inch maximum layers, then thoroughly tamped before the next layer is placed. Surplus earth shall be

placed around each pole in a conical shape and packed tightly to drain water away from poles.

TABLE II

MINIMUM POLE-SETTING DEPTH (FEET)

Length Overall Feet	Straight Lines	Curves, Corners, and Points of Extra Strain
45	6.5	7.0

3.3 CROSSARM MOUNTING

Crossarms shall be bolted to poles with 5/8 inch through-bolts with square washers at each end. Bolts shall extend not less than 1/8 inch nor more than 2 inches beyond nuts. On single crossarm construction, the bolt head shall be installed on the crossarm side of the pole. Wood crossarm braces shall be provided on crossarms. Flat braces may be provided for 8 foot crossarms and shall be 1/4 by 1-1/4 inches, not less than 28 inches in length. Flat braces shall be bolted to arms with 3/8 inch carriage bolts with round or square washers between boltheads and crossarms, and secured to poles with 1/2 by 4 inch lag screws after crossarms are leveled and aligned. Angle braces are required for 10 foot crossarms and shall be 60 inch span by 18 inch drop formed in one piece from 1-1/2 by 1-1/2 by 3/16 inch angle. Angle braces shall be bolted to crossarms with 1/2 inch bolts with round or square washers between boltheads and crossarms, and secured to poles with 5/8 inch through-bolts. Double crossarms shall be securely held in position by means of 5/8 inch double-arming bolts. Each double-arming bolt shall be equipped with four nuts and four square washers.

3.3.1 Line Arms and Buck Arms

Line arms and buck arms shall be set at right angles to lines for straight runs and for angles 45 degrees and greater; and line arms shall bisect angles of turns of less than 45 degrees. Dead-end assemblies shall be used for turns where shown. Buckarms shall be installed, as shown, at corners and junction poles. Double crossarms shall be provided at ends of joint use or conflict sections, at dead-ends, and at angles and corners to provide adequate vertical and longitudinal strength. Double crossarms shall be provided at each line-crossing structure and where lines not attached to the same pole cross each other.

3.4 GUY INSTALLATION

Guys shall be provided, with loads and strengths as indicated, and wherever conductor tensions are not balanced, such as at angles, corners, and dead-ends. Where a single guy will not provide the required strength, two or more guys shall be provided. Where guys are wrapped around poles, at least two guy hooks shall be provided and pole shims shall be provided where guy tension exceeds 6000 pounds. Guy clamps 6 inches in length with three 5/8 inch bolts, or offset-type guy clamps, or approved guy grips shall be provided at each guy terminal. Guy-strain insulators shall be provided in each guy for wood poles. Multiple-helix screw anchors shall be provided in

marshy ground; rock anchors shall be installed in rock at right angles to guys, elsewhere anchors shall be of an expanding type, except that power installed screw anchors of equivalent holding power are acceptable. A half-round gray polyvinyl, fiberglass, or other suitable plastic guy marker, not less than 8 feet in length, shall be provided at the anchor end of each guy shown, securely clamped to the guy or anchor at the bottom and top of the marker. Holding capacities for down guys shall be based on a lead angle of 45 degrees.

3.5 CONDUCTOR INSTALLATION

3.5.1 Line Conductors

Unless otherwise indicated, conductors shall be installed in accordance with manufacturer's approved tables of sags and tensions. Proper care shall be taken in handling and stringing conductors to avoid abrasions, sharp bends, cuts, kinks, or any possibility of damage to insulation or conductors. Conductors shall be paid out with the free end of conductors fixed and cable reels portable, except where terrain or obstructions make this method unfeasible. Bend radius for any insulated conductor shall not be less than the applicable NEMA specification recommendation. Conductors shall not be drawn over rough or rocky ground, nor around sharp bends. When installed by machine power, conductors shall be drawn from a mounted reel through stringing sheaves in straight lines clear of obstructions. Initial sag and tension shall be checked by the Contractor, in accordance with the manufacturer's approved sag and tension charts, within an elapsed time after installation as recommended by the manufacturer.

3.5.2 Connectors and Splices

Connectors and splices shall be mechanically and electrically secure under tension and shall be of the nonbolted compression type. The tensile strength of any splice shall be not less than the rated breaking strength of the conductor. Splice materials, sleeves, fittings, and connectors shall be noncorrosive and shall not adversely affect conductors. Aluminum-composition conductors shall be wire brushed and an oxide inhibiter applied before making a compression connection. Connectors which are factory-filled with an inhibiter are acceptable. Inhibiters and compression tools shall be of types recommended by the connector manufacturer. Primary line apparatus taps shall be by means of hot line clamps attached to compression type bail clamps (stirrups). Noninsulated connectors shall be smoothly taped to provide a waterproof insulation equivalent to the original insulation, when installed on insulated conductors. On overhead connections of aluminum and copper, the aluminum shall be installed above the copper.

3.5.3 Conductor-To-Insulator Attachments

Conductors shall be attached to insulators by means of clamps, shoes or tie wires, in accordance with the type of insulator.

3.6 GROUNDING

Noncurrent-carrying metal parts of equipment and conductor assemblies, such as medium-voltage cable terminations and messengers, and other noncurrent-carrying metal items shall be grounded. Additional grounding of equipment, neutral, and surge arrester grounding systems shall be installed at poles.

3.6.1 Grounding Electrodes

Grounding electrodes shall be installed as follows:

a. Driven rod electrodes - Unless otherwise indicated, ground rods shall be located approximately 3 feet out from base of the pole and shall be driven into the earth until the tops of the rods are approximately 1 foot below finished grade. Multiple rods shall be evenly spaced at least 10 feet apart and connected together 2 feet below grade with a minimum No. 6 bare copper conductor.

b. Ground Resistance - The maximum resistance of a driven ground rod shall not exceed 5 ohms under normally dry conditions. Whenever the required ground resistance is not met, provide additional electrodes interconnected with grounding conductors to achieve the specified ground resistance. The additional electrodes will be up to three 10 feet rods spaced a minimum of 10 feet apart. In high ground resistance, UL listed chemically charged ground rods may be used. If the resultant resistance exceeds 5 ohms measured not less than 48 hours after rainfall, the Contracting Officer shall be notified immediately. Connections below grade shall be fusion welded. Connections above grade shall be fusion welded or shall use UL 467 approved connectors.

3.6.2 Grounding and Bonding Connections

Connections above grade shall be made by the fusion-welding process or with bolted solderless connectors in compliance with UL 467, and those below grade shall be made by a fusion-welding process. Where grounding conductors are connected to aluminum-composition conductors, specially treated or lined copper-to-aluminum connectors suitable for this purpose shall be used.

3.6.3 Grounding Electrode Conductors

For single grounded or ungrounded systems, provide a grounding conductor for the surge arrester and equipment grounding conductors. Grounding electrode conductors shall be sized as shown. Grounding electrode conductors shall be stapled to wood poles at intervals not exceeding 2 feet. Bends greater than 45 degrees in grounding electrode conductor are not permitted.

3.7 FIELD TESTING

3.7.1 General

Field testing shall be performed in the presence of the Contracting Officer. The Contractor shall notify the Contracting Officer 10 days prior to conducting tests. The Contractor shall furnish materials, labor, and equipment necessary to conduct field tests. The Contractor shall perform tests and inspections recommended by the manufacturer unless specifically waived by the Contracting Officer. The Contractor shall maintain a written record of tests which includes date, test performed, personnel involved, devices tested, serial number and name of test equipment, and test results. Field reports will be signed and dated by the Contractor.

3.7.2 Safety

The Contractor shall provide and use safety devices such as rubber gloves, protective barriers, and danger signs to protect and warn personnel in the test vicinity. The Contractor shall replace any devices or equipment which are damaged due to improper test procedures or handling.

3.7.3 Ground-Resistance Tests

The resistance of each pole ground shall be measured using the fall-of-potential method defined in IEEE Std 81. Ground resistance measurements shall be made before the electrical distribution system is energized and shall be made in normally dry conditions not less than 48 hours after the last rainfall.

3.7.4 Medium-Voltage Preassembled Cable Test

After installation, prior to connection to an existing system, and before the operating test, the medium-voltage preassembled cable system shall be given a high potential test. Direct-current voltage shall be applied on each phase conductor of the system by connecting conductors at one terminal and connecting grounds or metallic shieldings or sheaths of the cable at the other terminal for each test. Prior to the test, the cables shall be isolated by opening applicable protective devices and disconnecting equipment. The method, voltage, length of time, and other characteristics of the test for initial installation shall be in accordance with NEMA WC 7 or NEMA WC 8 for the particular type of cable installed, and shall not exceed the recommendations of IEEE Std 404 for cable joints unless the cable and accessory manufacturers indicate higher voltages are acceptable for testing. Should any cable fail due to a weakness of conductor insulation or due to defects or injuries incidental to the installation or because of improper installation of cable, cable joints, terminations, or other connections, the Contractor shall make necessary repairs or replace cables as directed. Repaired or replaced cables shall be retested.

3.7.5 Sag and Tension Test

The Contracting Officer shall be given prior notice of the time schedule for stringing conductors or cables serving overhead medium-voltage circuits and reserves the right to witness the procedures used for ascertaining that initial stringing sags and tensions are in compliance with requirements for the applicable loading district and cable weight.

3.8 ACCEPTANCE

Final acceptance of the facility will not be given until the Contractor has successfully completed all tests and after all defects in installation, material or operation have been corrected.

END OF SECTION

SECTION 16375

ELECTRICAL DISTRIBUTION SYSTEM, UNDERGROUND

1 GENERAL

1.1 REFERENCES

The publications listed below form a part of this specification to the extent referenced. The publications are referred to in the text by basic designation only.

AMERICAN NATIONAL STANDARDS INSTITUTE (ANSI)

ANSI C12.1	(1995) Code for Electricity Metering
ANSI C12.4	(1984; R 1990) Mechanical Demand Registers
ANSI C12.10	(1987) Electromechanical Watthour Meters
ANSI C12.11	(1987; R 1993) Instrument Transformers for Revenue Metering, 10 kV BIL through 350 kV BIL (0.6 kV NSV through 69 kV NSV)
ANSI C29.1	(1988) Electrical Power Insulators - Test Methods
ANSI C37.16	(1988; C37.16a) Low-Voltage Power Circuit Breakers and AC Power Circuit Protectors - Preferred Ratings, Related Requirements, and Application Recommendations
ANSI C37.46	(1981; R 1992) Power Fuses and Fuse Disconnecting Switches
ANSI C37.50	(1989) Switchgear, Low-Voltage AC Power Circuit Breakers Used in Enclosures - Test Procedures
ANSI C37.72	(1987) Manually-Operated Dead-Front, Padmounted Switchgear with Load-Interrupting Switches and Separable Connectors for Alternating-Current Systems
ANSI C37.121	(1989) Switchgear, Unit Substations Requirements
ANSI C57.12.13	(1982) Conformance Requirements for Liquid-Filled Transformers Used in Unit Installations, Including Unit Substations
ANSI C57.12.21	(1980) Requirements for Pad-Mounted, Compartmental-Type, Self-Cooled, Single-Phase Distribution Transformers with High-Voltage Bushings; (High-Voltage, 34 500 Grd Y/19 920

	Volts and Below; Low-Voltage, 240/120; 167 kVA and Smaller)
ANSI C57.12.26	(1993) Pad-Mounted Compartmental-Type, Self-Cooled, Three-Phase Distribution Transformers for Use with Separable Insulated High-Voltage Connectors, High-Voltage, 34 500 Grd Y/19 920 Volts and Below; 2500 kVa and Smaller
ANSI C57.12.27	(1982) Conformance Requirements for Liquid-Filled Distribution Transformers Used in Pad-Mounted Installations, Including Unit Substations
ANSI C57.12.28	(1988) Switchgear and Transformers - Padmounted Equipment - Enclosure Integrity
ANSI C80.1	(1990) Rigid Steel Conduit - Zinc Coated
ANSI C119.1	(1986) Sealed Insulated Underground Connector Systems Rated 600 Volts
ANSI C135.30	(1988) Zinc-Coated Ferrous Ground Rods for Overhead or Underground Line Construction
ANSI O5.1	(1992) Specifications and Dimensions for Wood Poles

AMERICAN SOCIETY FOR TESTING AND MATERIALS (ASTM)

ASTM A 48	(1994a) Gray Iron Castings
ASTM A 123	(1989a) Zinc (Hot-Dip Galvanized) Coatings on Iron and Steel Products
ASTM A 153	(1996) Zinc Coating (Hot-Dip) on Iron and Steel Hardware
ASTM B 8	(1993) Concentric-Lay-Stranded Copper Conductors, Hard, Medium-Hard, or Soft
ASTM B 117	(1994) Operating Salt Spray (Fog) Testing Apparatus
ASTM C 478	(1994) Precast Reinforced Concrete Manhole Sections
ASTM D 923	(1991) Sampling Electrical Insulating Liquids
ASTM D 1654	(1992) Evaluation of Painted or Coated Specimens Subjected to Corrosive Environments
ASTM D 2472	(1992) Sulfur Hexafluoride
ASTM D 4059	(1991) Analysis of Polychlorinated Biphenyls in Insulating Liquids by Gas Chromatography

ASTM F 883	(1990) Padlocks

ASSOCIATION OF EDISON ILLUMINATING COMPANIES (AEIC)

AEIC CS5	(1994) Specifications for Cross-linked Polyethylene Insulated Shielded Power Cables Rated 5 Through 46 kV
AEIC CS6	(1987; Rev Mar 1989) Ethylene Propylene Rubber Insulated Shielded Power Cables Rated 5 Through 69 kV

FACTORY MUTUAL ENGINEERING AND RESEARCH (FM)

FM P7825	(1995; Supple I; Supple II; Supple III) Approval Guide

INSTITUTE OF ELECTRICAL AND ELECTRONICS ENGINEERS (IEEE)

IEEE C2	(1997) National Electrical Safety Code
IEEE C37.1	(1994) IEEE Standard Definition, Specification, and Analysis of Systems Used for Supervisory Control, Data Acquisition, and Automatic Control
IEEE C37.2	(1991) Electrical Power System Device Function Numbers
IEEE C37.13	(1990) Low-Voltage AC Power Circuit Breakers Used in Enclosures
IEEE C37.20.1	(1993) Metal-Enclosed Low-Voltage Power Circuit-Breaker Switchgear
IEEE C37.20.2	(1993; C37.20.2b) Metal-Clad and Station-Type Cubicle Switchgear
IEEE C37.20.3	(1987) Metal-Enclosed Interrupter Switchgear
IEEE C37.23	(1987; R 1991) Guide for Metal-Enclosed Bus and Calculating Losses in Isolated-Phase Bus
IEEE C37.30	(1992) Definitions and Requirements for High-Voltage Air Switches, Insulators, and Bus Supports
IEEE C37.34	(1994) Test Code for High-Voltage Air Switches
IEEE C37.41	(1994) Design Tests for High-Voltage Fuses, Distribution Enclosed Single-Pole Air Switches, Fuse Disconnecting Switches, and Accessories

IEEE C37.63	(1984; R 1990) Requirements for Overhead, Pad-Mounted, Dry-Vault, and Submersible Automatic Line Sectionalizer for AC Systems
IEEE C37.90	(1989) Relays and Relay Systems Associated with Electric Power Apparatus
IEEE C37.90.1	(1989; R 1991) IEEE Standard Surge Withstand Capability (SWC) Tests for Protective Relays and Relay Systems
IEEE C37.98	(1987; R 1991) Seismic Testing of Relays
IEEE C57.12.00	(1993) IEEE Standard General Requirements for Liquid-Immersed Distribution, Power, and Regulating Transformers
IEEE C57.13	(1993) Instrument Transformers
IEEE C57.98	(1993) Guide for Transformer Impulse Tests
IEEE C62.1	(1989; R 1994) Surge Arresters for ac Power Circuits
IEEE C62.2	(1987; R 1994) Guide for the Application of Gapped Silicon-Carbide Surge Arresters for Alternating Current Systems
IEEE C62.11	(1993) IEEE Standard Metal-Oxide Surge Arresters for AC Power Circuits
IEEE Std 48	(1996) Standard Test Procedures and Requirements for Alternating-Current Cable Terminations 2.5 kV through 765 kV
IEEE Std 81	(1983) Guide for Measuring Earth Resistivity, Ground Impedance, and Earth Surface Potentials of a Ground System (Part 1)
IEEE Std 100	(1992) IEEE Standard Dictionary of Electrical and Electronics Terms
IEEE Std 242	(1986; R 1991) Recommended Practice for Protection and Coordination of Industrial and Commercial Power Systems
IEEE Std 386	(1995) Separable Insulated Connector Systems for Power Distribution Systems Above 600V
IEEE Std 399	(1990) Recommended Practice for Industrial and Commercial Power System Analysis
IEEE Std 404	(1993) Cable Joints for Use with Extruded Dielectric Cable Rated 5000 V through 46 000 V and Cable Joints for Use with Laminated Dielectric Cable Rated 2500 V Through 500 000 V

IEEE Std 590	(1977; R 1991) IEEE Cable Plowing Guide
IEEE Std 592	(1990) Exposed Semiconducting Shields on Premolded High Voltage Cable Joints and Separable Insulated Connectors

NATIONAL ELECTRICAL MANUFACTURERS ASSOCIATION (NEMA)

NEMA AB 1	(1993) Molded Case Circuit Breakers and Molded Case Switches
NEMA BU 1	(1994) Busways
NEMA FB 1	(1993) Fittings, Cast Metal Boxes and Conduit Bodies for Conduit and Cable Assemblies
NEMA FU 1	(1986) Low Voltage Cartridge Fuses
NEMA LA 1	(1992) Surge Arresters
NEMA PB 1	(1990) Panelboards
NEMA PB 2	(1989) Deadfront Distribution Switchboards
NEMA SG 2	(1993) High Voltage Fuses
NEMA SG 3	(1990) Low-Voltage Power Circuit Breakers
NEMA SG 5	(1990) Power Switchgear Assemblies
NEMA TC 5	(1990) Corrugated Polyolefin Coilable Plastic Utilities Duct
NEMA TC 6	(1990) PVC and ABS Plastic Utilities Duct for Underground Installation
NEMA TC 7	(1990) Smooth-Wall Coilable Polyethylene Electrical Plastic Duct
NEMA WC 7	(1993) Cross-Linked-Thermosetting-Polyethylene- Insulated Wire and Cable for the Transmission and Distribution of Electrical Energy
NEMA WC 8	(1993) Ethylene-Propylene-Rubber-Insulated Wire and Cable for the Transmission and Distribution of Electrical Energy

NATIONAL FIRE PROTECTION ASSOCIATION (NFPA)

NFPA 70	(1996) National Electrical Code

UNDERWRITERS LABORATORIES (UL)

UL 6	(1993; Rev March 96) Rigid Metal Conduit

UL 198C	(1986; Rev thru Jun 1993) High-Interrupting-Capacity Fuses, Current-Limiting Types
UL 198D	(1995) Class K Fuses
UL 198E	(1988; Rev Jul 1988) Class R Fuses
UL 198H	(1988; Rev thru Nov 1993) Class T Fuses
UL 467	(1993; Rev thru Aug 1996) Grounding and Bonding Equipment
UL 486A	(1991; Rev Oct 1991) Wire Connectors and Soldering Lugs for Use with Copper Conductors
UL 486B	(1991; Rev thru Oct 1996) Wire Connectors for Use with Aluminum Conductors
UL 489	(1996) Molded-Case Circuit Breakers and Circuit-Breaker Enclosures
UL 510	(1994) Insulating Tape
UL 514A	(1996) Metallic Outlet Boxes
UL 651	(1995) Schedule 40 and 80 Rigid PVC Conduit
UL 854	(1996; Rev May 1996) Service-Entrance Cables
UL 857	(1994; Rev Oct 1994) Busways and Associated Fittings
UL 1242	(1996) Intermediate Metal Conduit
UL 1684	(1993) Reinforced Thermosetting Resin Conduit

1.2 GENERAL REQUIREMENTS

1.2.1 Terminology

Terminology used in this specification is as defined in IEEE Std 100.

1.2.2 Service Conditions

Items provided under this section shall be specifically suitable for the following service conditions:

a. Altitude 500 feet

b. Ambient Temperature 150 degrees F

c. Frequency 60

d. Seismic Zone 3

1.3 SUBMITTALS

Governmental approval is required for submittals with a "GA" designation; submittals having an "FIO" designation are for information only. The following shall be submitted in accordance with Section 01330 SUBMITTAL PROCEDURES:

SD-01 Data

Manufacturer's Catalog Data; FIO.

Catalog cuts, brochures, circulars, specifications, product data, and printed information in sufficient detail and scope to verify compliance with the requirements of the contract documents.

Material, Equipment, and Fixture Lists; GA.

A complete itemized listing of equipment and materials proposed for incorporation into the work. Each entry shall include an item number, the quantity of items proposed, and the name of the manufacturer of each such item.

Installation Procedures; FIO.

As a minimum, installation procedures for transformers, distribution equipment, and medium-voltage cable terminations and splices.

Procedures shall include cable pulling plans, diagrams, instructions, and precautions required to install, adjust, calibrate, and test the devices and equipment.

SD-04 Drawings

Electrical Distribution System; GA.

Detail drawings consisting of equipment drawings, illustrations, schedules, instructions, diagrams manufacturers standard installation drawings and other information necessary to define the installation and enable the Government to check conformity with the requirements of the contract drawings.

If departures from the contract drawings are deemed necessary by the Contractor, complete details of such departures shall be included with the detail drawings. Approved departures shall be made at no additional cost to the Government.

Detail drawings shall show how components are assembled, function together and how they will be installed on the project. Data and drawings for component parts of an item or system shall be coordinated and submitted as a unit. Data and drawings shall be coordinated and included in a single submission. Multiple submissions for the same equipment or system are not acceptable except where prior approval has been obtained from the Contracting Officer. In such cases, a list of data to be submitted later shall be included with the first submission. Detail drawings shall consist of the following:

a. Detail drawings showing physical arrangement, construction details, connections, finishes, materials used in fabrication, provisions for conduit entrance, access requirements for installation and maintenance, physical size, electrical characteristics, foundation and support details, and equipment weight. Drawings shall be drawn to scale and/or dimensioned. All optional items shall be clearly identified as included or excluded.

b. Internal wiring diagrams of equipment showing wiring as actually provided for this project. External wiring connections shall be clearly identified.

Detail drawings shall as a minimum depict the installation of the following items:

a. Medium-voltage cables and accessories including cable installation plan.

b. Transformers.

c. Surge arresters.

As-Built Drawings; GA.

The as-built drawings shall be a record of the construction as installed. The drawings shall include the information shown on the contract drawings as well as deviations, modifications, and changes from the contract drawings, however minor. The as-built drawings shall be a full sized set of prints marked to reflect deviations, modifications, and changes. The as-built drawings shall be complete and show the location, size, dimensions, part identification, and other information. Additional sheets may be added. The as-built drawings shall be jointly inspected for accuracy and completeness by the Contractor's quality control representative and by the Contracting Officer prior to the submission of each monthly pay estimate. Upon completion of the work, the Contractor shall provide three full sized sets of the marked prints to the Contracting Officer for approval. If upon review, the as-built drawings are found to contain errors and/or omissions, they will be returned to the Contractor for correction. The Contractor shall correct and return the as-built drawings to the Contracting Officer for approval within 10 calendar days from the time the drawings are returned to the Contractor.

SD-09 Reports

Factory Test; FIO.

Certified factory test reports shall be submitted when the manufacturer performs routine factory tests, including tests required by standards listed in paragraph REFERENCES. Results of factory tests performed shall be certified by the manufacturer, or an approved testing laboratory, and submitted within 7 days following successful completion of the tests. The manufacturer's pass-fail criteria for tests specified in paragraph FIELD TESTING shall be included.

Field Testing; GA.

A proposed field test plan, 20 days prior to testing the installed system. No field test shall be performed until the test plan is approved. The test plan shall consist of complete field test procedures including tests to be performed, test equipment required, and tolerance limits.

Test Reports; GA.

Ten copies of the information described below in 8-1/2 by 11 inch binders having a minimum of three rings, including a separate section for each test. Sections shall be separated by heavy plastic dividers with tabs.

a. A list of equipment used, with calibration certifications.

b. A copy of measurements taken.

c. The dates of testing.

d. The equipment and values to be verified.

e. The condition specified for the test.

f. The test results, signed and dated.

g. A description of adjustments made.

Cable Installation Reports; GA.

Ten copies of the information described below in 8-1/2 by 11 inch binders having a minimum of three rings from which material may readily be removed and replaced, including a separate section for each cable pull. Sections shall be separated by heavy plastic dividers with tabs, with all data sheets signed and dated by the person supervising the pull.

a. Site layout drawing with cable pulls numerically identified.

b. A list of equipment used, with calibration certifications. The manufacturer and quantity of lubricant used on pull.

c. The cable manufacturer and type of cable.

d. The dates of cable pulls, time of day, and ambient temperature.

e. The length of cable pull and calculated cable pulling tensions.

f. The actual cable pulling tensions encountered during pull.

SD-13 Certificates

Materials and Equipment; GA.

Where materials or equipment are specified to conform to the standards of the Underwriters Laboratories (UL) or to be constructed or tested, or both, in accordance with the standards of the American National Standards Institute (ANSI), the Institute of Electrical and Electronics Engineers (IEEE), or the National Electrical Manufacturers Association (NEMA), the Contractor shall submit proof that the items provided conform to such requirements. The label of, or listing by, UL will be acceptable as

evidence that the items conform. Either a certification or a published catalog specification data statement, to the effect that the item is in accordance with the referenced ANSI or IEEE standard, will be acceptable as evidence that the item conforms. A similar certification or published catalog specification data statement to the effect that the item is in accordance with the referenced NEMA standard, by a company listed as a member company of NEMA, will be acceptable as evidence that the item conforms. In lieu of such certification or published data, the Contractor may submit a certificate from a recognized testing agency equipped and competent to perform such services, stating that the items have been tested and that they conform to the requirements listed, including methods of testing of the specified agencies. Compliance with above-named requirements does not relieve the Contractor from compliance with any other requirements of the specifications.

Cable Splicer Qualification; GA.

A certification that contains the names and the qualifications of people recommended to perform the splicing and termination of medium-voltage cables approved for installation under this contract. The certification shall indicate that any person recommended to perform actual splicing and terminations has been adequately trained in the proper techniques and have had at least three recent years of experience in splicing and terminating the same or similar types of cables approved for installation. In addition, any person recommended by the Contractor may be required to perform a practice splice and termination, in the presence of the Contracting Officer, before being approved as a qualified installer of medium-voltage cables. If that additional requirement is imposed, the Contractor shall provide short sections of the approved types of cables along with the approved type of splice and termination kits, and detailed manufacturer's instruction for the proper splicing and termination of the approved cable types.

Cable Installer Qualifications; FIO.

The Contractor shall provide at least one onsite person in a supervisory position with a documentable level of competency and experience to supervise all cable pulling operations. A resume shall be provided showing the cable installers' experience in the last three years, including a list of references complete with points of contact, addresses and telephone numbers.

SD-19 Operation and Maintenance Manuals

Electrical Distribution System; GA.

Ten copies of operation and maintenance manuals, within 14 calendar days following the completion of tests and including assembly, installation, operation and maintenance instructions, spare parts data which provides supplier name, current cost, catalog order number, and a recommended list of spare parts to be stocked. Manuals shall also include data outlining detailed procedures for system startup and operation, and a troubleshooting guide which lists possible operational problems and corrective action to be taken. A brief description of all equipment, basic operating features, and routine maintenance requirements shall also be included. Documents shall be bound in a binder marked or identified on the spine and front cover. A table of contents page shall be included and marked with pertinent contract information and contents of the manual. Tabs shall be provided to separate different types of documents, such as catalog ordering information,

drawings, instructions, and spare parts data. Index sheets shall be provided for each section of the manual when warranted by the quantity of documents included under separate tabs or dividers.

Three additional copies of the instructions manual shall be provided within 30 calendar days following the manuals.

1.4 DELIVERY, STORAGE, AND HANDLING

Devices and equipment shall be visually inspected by the Contractor when received and prior to acceptance from conveyance. Stored items shall be protected from the environment in accordance with the manufacturer's published instructions. Damaged items shall be replaced. Oil filled transformers and switches shall be stored in accordance with the manufacturer's requirements.

1.5 EXTRA MATERIALS

One additional spare fuse or fuse element for each furnished fuse or fuse element shall be delivered to the contracting officer when the electrical system is accepted. Two complete sets of all special tools required for maintenance shall be provided, complete with a suitable tool box. Special tools are those that only the manufacturer provides, for special purposes (to access compartments, or operate, adjust, or maintain special parts).

2 PRODUCTS

2.1 STANDARD PRODUCT

Material and equipment shall be the standard product of a manufacturer regularly engaged in the manufacture of the product and shall essentially duplicate items that have been in satisfactory use for at least 2 years prior to bid opening. Items of the same classification shall be identical including equipment, assemblies, parts, and components.

2.2 NAMEPLATES

2.2.1 General

Each major component of this specification shall have the manufacturer's name, address, type or style, model or serial number, and catalog number on a nameplate securely attached to the equipment. Nameplates shall be made of noncorrosive metal. Equipment containing liquid dielectrics shall have the type of dielectric on the nameplate. As a minimum, nameplates shall be provided for transformers and switches.

2.2.2 Liquid-Filled Transformer Nameplates

Power transformers shall be provided with nameplate information in accordance with IEEE C57.12.00. Nameplates shall indicate the number of gallons and composition of liquid-dielectric, and shall be permanently marked with a statement that the transformer dielectric to be supplied is non-polychlorinated biphenyl. If transformer nameplate is not so marked, the Contractor shall furnish manufacturer's certification for each transformer that the dielectric is non-PCB classified, with less than 2 ppm PCB content in accordance with paragraph LIQUID DIELECTRICS. Certifications shall be related to serial numbers on transformer nameplates. Transformer

dielectric exceeding the 2 ppm PCB content or transformers without certification will be considered as PCB insulated and will not be accepted.

2.3 CORROSION PROTECTION

2.3.1 Aluminum Materials

Aluminum shall not be used.

2.3.2 Ferrous Metal Materials

2.3.2.1 Hardware

Ferrous metal hardware shall be hot-dip galvanized in accordance with ASTM A 153 and ASTM A 123.

2.3.2.2 Equipment

Equipment and component items, including but not limited to transformer stations, shall be provided with corrosion-resistant finishes which shall withstand 120 hours of exposure to the salt spray test specified in ASTM B 117 without loss of paint or release of adhesion of the paint primer coat to the metal surface in excess of 1/16 inch from the test mark. The scribed test mark and test evaluation shall be in accordance with ASTM D 1654 with a rating of not less than 7 in accordance with TABLE 1, (procedure A). Cut edges or otherwise damaged surfaces of hot-dip galvanized sheet steel or mill galvanized sheet steel shall be coated with a zinc rich paint conforming to the manufacturer's standard.

2.3.3 Finishing

Painting required for surfaces not otherwise specified and finish painting of items only primed at the factory shall be as specified in Section 09900 PAINTING, GENERAL.

2.4 CABLES

Cables shall be single conductor type unless otherwise indicated.

2.4.1 Conductor Material

Underground cables shall be of soft drawn copper conductor material.

2.4.2 Medium-Voltage Cables

2.4.2.1 General

Medium voltage cables shall conform to the requirements of NEMA WC 8 for cables utilizing ethylene-propylene-rubber (EPR) insulation. Cables shall be in accordance with the requirements of NFPA 70.

2.4.2.2 Insulation

Cables shall utilize ethylene-propylene-rubber (EPR) insulation. Cables shall be provided with 133 percent insulation level.

2.4.2.3 Jackets

Cables shall be provided with a nonmetallic jacket.

2.4.2.4 Neutrals

Neutral conductors of grounded neutral systems except for concentric neutral cables shall be of the same insulation material as phase conductors, except that a 600-volt insulation rating is acceptable.

2.4.2.5 Shielding

Cables rated for above 2 kV shall have both conductor and insulation shielding for each phase.

2.4.2.6 Ratings

Medium-voltage cables shall be rated for a circuit voltage of 15 kV.

2.4.2.7 Fault Indicators

Automatic test-point reset type rated for use on 250A, 15 kV load break connector with integral test point and 300A trip rating. Provide integral display, independent for all phases. Provide cable shield adapters and grounding.

2.4.3 Low-Voltage Cables

Cables shall be rated 600 volts and shall conform to the requirements of NFPA 70. Cables shall utilize ethylene-propylene-rubber (EPR) insulation and shall conform to the requirements of NEMA WC 8.

2.4.3.1 In Duct

Cables shall be single-conductor cable, Type THW, THWN, or XHHW in accordance with NFPA 70.

2.5 CABLE JOINTS

2.5.1 Medium-Voltage Separable Insulated Connectors

Separable premolded insulated connectors shall comply with IEEE Std 386 and IEEE Std 592 and shall be of suitable construction or standard splice kits shall be used. Connectors shall be of the loadbreak type, of suitable construction for the application and the type of cable connected, and shall include cable shield adaptors. Separable insulated connectors shall not be used as substitutes for conventional permanent splices. External clamping points and test points shall be provided.

2.5.2 Low-Voltage Cable Splices

Low-voltage cable splices and terminations shall be rated at not less than 600 Volts. Splices in conductors No. 10 AWG and smaller shall be made with an insulated, solderless, pressure type connector, conforming to the applicable requirements of UL 486A. Splices in conductors No. 8 AWG and larger shall be made with noninsulated, solderless, pressure type connector, conforming to the applicable requirements of UL 486A and UL 486B. Splices

shall then be covered with an insulation and jacket material equivalent to the conductor insulation and jacket. Splices below grade or in wet locations shall be sealed type conforming to ANSI C119.1 or shall be waterproofed by a sealant-filled, thick wall, heat shrinkable, thermosetting tubing or by pouring a thermosetting resin into a mold that surrounds the joined conductors.

2.5.3 Terminations

Terminations shall be in accordance with IEEE Std 48, Class 1. Separable insulated connectors to be used for apparatus terminations, when such apparatus is provided with suitable bushings. Terminations shall be of the outdoor type. Class 2 and Class 3 terminations are not acceptable. Terminations, where required, shall be provided with mounting brackets suitable for the intended installation and with grounding provisions for the cable shielding, and metallic sheath.

2.5.3.1 Factory Preformed Type

Terminations shall have basic impulse levels as required for the system voltage level. Anti-tracking tape shall be applied over exposed insulation of preformed molded elastomer terminations.

2.6 CONDUIT AND DUCTS

Duct lines shall be concrete-encased, thin-wall Schedule 40 type for duct lines between manholes and for other medium-voltage lines. Duct lines shall be concrete-encased, thin-wall Schedule 40 type for communications lines.

2.6.1 Metallic Conduit

Intermediate metal conduit shall comply with UL 1242. Rigid galvanized steel conduit shall comply with UL 6 and ANSI C80.1. Metallic conduit fittings and outlets shall comply with UL 514A and NEMA FB 1.

2.6.2 Nonmetallic Ducts

2.6.2.1 Concrete Encased Ducts

UL 651 Schedule 40.

2.6.2.2 Direct Burial

UL 651 Schedule 40.

2.6.3 Conduit Sealing Compound

Compounds for sealing ducts and conduit shall have a putty-like consistency workable with the hands at temperatures as low as 35 degrees F, shall neither slump at a temperature of 300 degrees F, nor harden materially when exposed to the air. Compounds shall adhere to clean surfaces of fiber or plastic ducts; metallic conduits or conduit coatings; concrete, masonry, or lead; any cable sheaths, jackets, covers, or insulation materials; and the common metals. Compounds shall form a seal without dissolving, noticeably changing characteristics, or removing any of the ingredients. Compounds shall have no injurious effect upon the hands of workmen or upon materials.

2.7 MANHOLES, HANDHOLES, AND PULLBOXES

Manholes, handholes, and pullboxes shall be as indicated. Strength of manholes, handholes, and pullboxes and their frames and covers shall conform to the requirements of IEEE C2. Precast-concrete manholes shall have the required strength established by ASTM C 478. Frames and covers shall be made of gray cast iron and a machine-finished seat shall be provided to ensure a matching joint between frame and cover. Cast iron shall comply with ASTM A 48, Class 30B, minimum. Handholes for low voltage cables installed in parking lots, sidewalks, and turfed areas shall be precast reinforced concrete with cast iron lid. In paved areas, frames and covers in vehicular traffic areas shall be rated for wheel loads in accordance with FF RR-F-621.

2.8 TRANSFORMERS, SUBSTATIONS, AND SWITCHGEAR

Transformers shall be of the outdoor type having the ratings and arrangements indicated. Medium-voltage ratings of cable terminations shall be 15 kV between phases for 133 percent insulation level.

2.8.1 Pad-Mounted Transformers

Pad-mounted transformers shall comply with ANSI C57.12.26 and shall be of the loop type. Pad-mounted transformer stations shall be assembled and coordinated by one manufacturer and each transformer station shall be shipped as a complete unit so that field installation requirements are limited to mounting each unit on a concrete pad and connecting it to primary and secondary lines. Stainless steel pins and hinges shall be provided. Barriers shall be provided between high- and low-voltage compartments. High-voltage compartment doors shall be interlocked with low-voltage compartment doors to prevent access to any high-voltage section unless its associated low-voltage section door has first been opened. Compartments shall be sized to meet the specific dimensional requirements of ANSI C57.12.26. Pentahead locking bolts shall be provided with provisions for a padlock. Transformer enclosure shall be painted Federal Color 20062 (brown).

2.8.1.1 High-Voltage Compartments

The high-voltage compartment shall be dead-front construction. Primary switching and protective devices shall include loadbreak switching, oil-immersed, bayonet-type, overload fuse in series with a partial range current-limiting fuse, medium-voltage separable loadbreak connectors, universal bushing wells and surge arresters. Fuses shall comply with the requirements of paragraph PROTECTIVE DEVICES. The switch shall be mounted inside transformer tank with switch operating handle located in high-voltage compartment and equipped with metal loop for hook stick operation. Fuses shall be interlocked with switches so that fuses can be removed only when the associated switch is in the "OPEN" position. Adjacent to medium-voltage cable connections, a nameplate or equivalent stencilled inscription shall be provided inscribed "DO NOT OPEN CABLE CONNECTORS UNLESS SWITCH IS OPEN." Adjacent to switch operating handle, nameplates shall identify switch operating handle in "ON" and "OFF" positions. Surge arresters shall be fully insulated and configured to terminate on a second set of high voltage bushings.

2.8.1.2 Load-Break Switch

Loop feed sectionalizer switches: Provide three, two-position, oil-immersed type switches to permit closed transition loop feed and sectionalizing. Each switch shall be rated at 15 kV, 95 kV BIL, with a continuous current rating and load-break rating of 200 amperes, and a make-and-latch rating of 10,000 rms amperes symmetrical. Locate the switch handle in the high-voltage compartment. Operation of switches shall be as follows:

ARRANGEMENT #	DESCRIPTION OF SWITCH ARRANGEMENT	SWITCH POSITION LINE A SW OPEN	LINE A SW CLOSE	LINE B SW OPEN	LINE B SW CLOSE	XFMR SW OPEN	XFMR SW CLOSE
1	Line A connected to Line B and both lines connected to transformer		X		X		X
2	Transformer connected to Line A only		X		X		X
3	Transformer connected to Line B only		X		X		X
4	Transformer open and loop closed		X		X		X
5	Transformer open and loop open		X		X		X

2.8.1.3 Transformer Tank Sections

Transformers shall comply with IEEE C57.12.00, ANSI C57.12.21, and ANSI C57.12.26 and shall be of the mineral oil-insulated type. Transformers shall be suitable for outdoor use and shall have 2 separate windings per phase. Standard NEMA primary taps shall be provided. Where primary taps are not specified, 4, 2-1/2 percent rated kVA high-voltage taps shall be provided, 2 above and 2 below rated, primary voltage. Operating handles for primary tap changers for de-energized operation shall be located within high-voltage compartments, externally to transformer tanks. Adjacent to the tap changer operating handle, a nameplate or equivalent stenciled inscription shall be provided and inscribed "DO NOT OPERATE UNDER LOAD." Transformer ratings at 60 Hz shall be as indicated. Temperature rise shall be 65 degrees C. Windings shall be copper.

2.8.1.4 Low-Voltage Cable Compartments

Neutrals shall be provided with fully-insulated bushings. Clamp type cable terminations, suitable for copper conductors entering from below, shall be provided as necessary.

2.8.1.5 Accessories

High-voltage warning signs shall be permanently attached to each side of transformer stations. Voltage warning signs shall comply with IEEE C2. Copper-faced steel or stainless steel ground connection pads shall be provided in both the high- and low-voltage compartments. Insulated-bushing-type parking stands shall be provided adjacent to each separable load-break elbow to provide for cable isolation during sectionalizing operations.

2.9 PROTECTIVE DEVICES

2.9.1 Fuses, Medium-Voltage, Including Current-Limiting

2.9.1.1 Construction

Units shall be suitable for outdoor use.

2.9.1.2 Ratings

As recommended by transformer manufacturer.

2.10 SURGE ARRESTERS

Surge arresters shall comply with NEMA LA 1, IEEE C62.1, IEEE C62.2, and IEEE C62.11 and shall be provided where indicated. Arresters shall be 15kV rated, distribution class. Arresters shall be of the combination valve-metal-oxide varistor type.

2.11 GROUNDING AND BONDING

2.11.1 Driven Ground Rods

Ground rods shall be copper-clad steel conforming to UL 467 not less than 3/4 inch in diameter by 10 feet in length. Sectional type rods may be used.

2.11.2 Grounding Conductors

Grounding conductors shall be bare, except where installed in conduit with associated phase conductors. Insulated conductors shall be of the same material as phase conductors and green color-coded, except that conductors shall be rated no more than 600 volts. Bare conductors shall be ASTM B 8 soft-drawn unless otherwise indicated. Aluminum is not acceptable.

2.12 CONCRETE AND REINFORCEMENT

Concrete work shall have minimum 3000 psi compressive strength and conform to the requirements of Section 03300 CAST-IN-PLACE STRUCTURAL CONCRETE. Concrete reinforcing shall be as specified in Section 03200 CONCRETE REINFORCEMENT.

2.13 PADLOCKS

Padlocks shall conform to ASTM F 883, and shall be of type and size to match existing at site. Coordinate with Contracting Officer and submit for approval by Contracting Officer.

2.14 CABLE FIREPROOFING SYSTEMS

Cable fireproofing systems shall be listed in FM P7825 as a fire-protective coating or tape approved for grouped electrical conductors and shall be suitable for application on the type of medium-voltage cables provided. After being fully cured, materials shall be suitable for use where exposed to oil, water, gases, salt water, sewage, and fungus and shall not damage cable jackets or insulation. Asbestos materials are not acceptable.

2.14.1 Fireproofing Tape

Fireproofing tape shall be at least 2 inches wide and shall be a flexible, conformable, polymeric, elastomer tape designed specifically for fireproofing cables.

2.14.2 Plastic Tape

Preapplication plastic tape shall be pressure sensitive, 10 mil thick, conforming to UL 510.

2.15 LIQUID DIELECTRICS

Liquid dielectrics for transformers and other liquid-filled electrical equipment shall be non-polychlorinated biphenyl (PCB) mineral-oil or less-flammable liquid as specified. Nonflammable fluids shall not be used. Tetrachloroethylene (perchloroethylene) and 1, 2, 4 trichlorobenzene fluids shall not be used. Liquid dielectrics shall be certified by the manufacturer as having less than 2 parts per million (ppm) PCB content. In lieu of the manufacturer's certification, the Contractor may submit a test sample of the dielectric in accordance with ASTM D 923 and have tests performed per ASTM D 4059 at a testing facility approved by the Contracting Officer. Equipment with test results indicating PCB level exceeding 2 ppm shall be replaced.

2.16 FACTORY TESTS

Factory tests shall be performed, as follows, in accordance with the applicable publications and with other requirements of these specifications. The Contracting Officer shall be notified at least 10 days before the equipment is ready for testing. The Contracting Officer reserves the right to witness the tests.

a. Transformers: Manufacturer's standard routine tests in accordance with IEEE C57.12.00.

b. Transformers rated 200 kVA and above: Reduced full-wave, chopped-wave, and full-wave impulse test on each line and neutral terminal, in accordance with IEEE C57.98.

c. Factory Preformed Terminations: Wet withstand voltage tests in accordance with IEEE Std 48 for the next higher BIL level.

3 EXECUTION

3.1 GENERAL INSTALLATION REQUIREMENTS

Equipment and devices shall be installed and energized in accordance with the manufacturer's published instructions. Steel conduits installed underground shall be installed and protected from corrosion in conformance with the requirements of Section 16415 ELECTRICAL WORK, INTERIOR. Except as covered herein, excavation, trenching, and backfilling shall conform to the requirements of Section 02222 EXCAVATION, TRENCHING, AND BACKFILLING FOR UTILITIES SYSTEMS. Concrete work shall have minimum 3000 psi compressive strength and conform to the requirements of Section 03300CAST-IN-PLACE STRUCTURAL CONCRETE.

3.1.1 Conformance to Codes

The installation shall comply with the requirements and recommendations of NFPA 70 and IEEE C2 as applicable.

3.1.2 Verification of Dimensions

The Contractor shall become familiar with details of the work, shall verify dimensions in the field, and shall advise the Contracting Officer of any discrepancy before performing any work.

3.2 CABLE INSTALLATION

The Contractor shall obtain from the manufacturer an installation manual or set of instructions which addresses such aspects as cable construction, insulation type, cable diameter, bending radius, cable temperature, lubricants, coefficient of friction, conduit cleaning, storage procedures, moisture seals, testing for and purging moisture, etc. The Contractor shall then perform pulling calculations and prepare a pulling plan which shall be submitted along with the manufacturers instructions in accordance with SUBMITTALS.

3.2.1 Cable Installation Plan and Procedure

Cable shall be installed strictly in accordance with the cable manufacturer's recommendations. Each circuit shall be identified by means of a fiber, laminated plastic, or non-ferrous metal tags, or approved equal, in each manhole, handhole, junction box, and each terminal. Each tag shall contain the following information; cable type, conductor size, circuit number, circuit voltage, cable destination and phase identification.

3.2.1.1 Cable Inspection

The cable reel shall be inspected for correct storage positions, signs of physical damage, and broken end seals. If end seal is broken, moisture shall be removed from cable in accordance with the cable manufacturer's recommendations.

3.2.1.2 Duct Cleaning

Prior to cable installation, duct shall be cleaned with an assembly that consists of a flexible mandrel (manufacturers standard product in lengths

recommended for the specific size and type of duct) that is 1/4 inch less than inside diameter of duct, 2 wire brushes, and a rag. The cleaning assembly shall be pulled through conduit a minimum of 2 times or until less than a volume of 8 cubic inches of debris is expelled from the duct.

3.2.1.3 Duct Lubrication

The cable lubricant shall be compatible with the cable jacket for cable that is being installed. Application of lubricant shall be in accordance with lubricant manufacturer's recommendations.

3.2.1.4 Cable Installation

The Contractor shall provide a cable feeding truck and a cable pulling winch as required. The Contractor shall provide a pulling grip or pulling eye in accordance with cable manufacturer's recommendations. The pulling grip or pulling eye apparatus shall be attached to polypropylene or manilla rope followed by lubricant front end packs and then by power cables. A dynamometer shall be used to monitor pulling tension. Pulling tension shall not exceed cable manufacturer's recommendations. The Contractor shall not allow cables to cross over while cables are being fed into duct. For cable installation in cold weather, cables shall be kept at 50 degrees F temperature for at least 24 hours before installation.

3.2.1.5 Cable Installation Plan

The Contractor shall submit a cable installation plan for all cable pulls in accordance with the detail drawings portion of paragraph SUBMITTALS. Cable installation plan shall include:

a. Site layout drawing with cable pulls identified in numeric order of expected pulling sequence and direction of cable pull.

b. List of cable installation equipment.

c. Lubricant manufacturer's application instructions.

d. Procedure for resealing cable ends to prevent moisture from entering cable.

e. Cable pulling tension calculations of all cable pulls.

f. Cable percentage conduit fill.

g. Cable sidewall thrust pressure.

h. Cable minimum bend radius and minimum diameter of pulling wheels used.

i. Cable jam ratio.

j. Maximum allowable pulling tension on each different type and size of conductor.

k. Maximum allowable pulling tension on pulling device.

3.2.2 Duct Line

Cables shall be installed in duct lines where indicated. Cable splices in low-voltage cables shall be made in manholes and handholes only, except as otherwise noted. Cable joints in medium-voltage cables shall be made in manholes or approved pullboxes only. Neutral and grounding conductors shall be installed in the same duct with their associated phase conductors.

3.2.3 Electric Manholes

Cables shall be routed around the interior walls and securely supported from walls on cables racks. Cable routing shall minimize cable crossover, provide access space for maintenance and installation of additional cables, and maintain cable separation in accordance with IEEE C2.

3.3 CABLE JOINTS

Medium-voltage cable joints shall be made by qualified cable splicers only. Qualifications of cable splicers shall be submitted in accordance with paragraph SUBMITTALS. Shields shall be applied as required to continue the shielding system through each entire cable joint. Shields may be integrally molded parts of preformed joints. Shields shall be grounded at each joint or in accordance with manufacturer's recommended practice. Cable joints shall provide insulation and jacket equivalent to that of the associated cable.

3.4 FIREPROOFING

Each medium-voltage cable and conductor in manholes shall be fire-proofed for their entire length within the manhole. Where cables and conductors have been lubricated to enhance pulling into ducts, the lubricant shall be removed from cables and conductors exposed in the manhole before fireproofing.

3.4.1 Tape Method

Before application of fireproofing tape, plastic tape wrapping shall be applied over exposed metallic items such as the cable ground wire, and metallic outer covering to minimize the possibility of corrosion from the fireproofing materials and moisture. Before applying fireproofing tape, irregularities of cables, such as at cable joints, shall be evened out with insulation putty. A flexible conformable polymeric elastomer fireproof tape shall be wrapped tightly around each cable spirally in 1/2 lapped wrapping or in 2 butt-jointed wrappings with the second wrapping covering the joints of the first.

3.5 DUCT LINES

3.5.1 Requirements

Numbers and sizes of ducts shall be as indicated. Duct lines shall be laid with a minimum slope of 4 inches per 100 feet.Depending on the contour of the finished grade, the high-point may be at a terminal, a manhole, a handhole, or between manholes or handholes. Short-radius manufactured 90-degree duct bends may be used only for pole or equipment risers, unless specifically indicated as acceptable. The minimum manufactured bend radius shall be 18 inches for ducts of less than 3 inch diameter, and 36 inches for

ducts 3 inches or greater in diameter. Otherwise, long sweep bends having a minimum radius of 25 feet shall be used for a change of direction of more than 5 degrees, either horizontally or vertically. Both curved and straight sections may be used to form long sweep bends, but the maximum curve used shall be 30 degrees and manufactured bends shall be used. Ducts shall be provided with end bells whenever duct lines terminate in manholes or handholes.

3.5.2 Treatment

Ducts shall be kept clean of concrete, dirt, or foreign substances during construction. Field cuts requiring tapers shall be made with proper tools and match factory tapers. A coupling recommended by the duct manufacturer shall be used whenever an existing duct is connected to a duct of different material or shape. Ducts shall be stored to avoid warping and deterioration with ends sufficiently plugged to prevent entry of any water or solid substances. Ducts shall be thoroughly cleaned before being laid. Plastic ducts shall be stored on a flat surface and protected from the direct rays of the sun.

3.5.3 Concrete Encasement

Ducts requiring concrete encasements shall comply with NFPA 70, and as indicated. The separation between adjacent electric power and communication ducts shall conform to IEEE C2 and a minimum of 4 inches. Duct line encasements shall be monolithic construction. Where a connection is made to a previously poured encasement, the new encasement shall be well bonded or doweled to the existing encasement. The Contractor shall submit proposed bonding method for approval in accordance with the detail drawing portion of paragraph SUBMITTALS. At any point, except railroad and airfield crossings, tops of concrete encasements shall be not less than the cover requirements listed in NFPA 70. Separators or spacing blocks shall be made of steel, concrete, plastic, or a combination of these materials placed not farther apart than 4 feet on centers. Ducts shall be securely anchored to prevent movement during the placement of concrete and joints shall be staggered at least 6 inches vertically.

3.5.4 Nonencased Direct-Burial

Top of duct lines shall be below the frost line depth of 18 inches, but not less than 30 inches below finished grade and shall be installed with a minimum of 3 inches of earth around each duct, except that between adjacent electric power and communication ducts, 12 inches of earth is required. Bottoms of trenches shall be graded toward manholes or handholes and shall be smooth and free of stones, soft spots, and sharp objects. Where bottoms of trenches comprise materials other than sand, a 3 inch layer of sand shall be laid first and compacted to approximate densities of surrounding firm soil before installing ducts. Joints in adjacent tiers of duct shall be vertically staggered at least 6 inches. The first 6 inch layer of backfill cover shall be sand compacted as previously specified. The rest of the excavation shall be backfilled and compacted in 3 to 6 inch layers. Duct banks may be held in alignment with earth. However, high-tiered banks shall use a wooden frame or equivalent form to hold ducts in alignment prior to backfilling.

3.5.5 Installation of Couplings

Joints in each type of duct shall be made up in accordance with the manufacturer's recommendations for the particular type of duct and coupling selected and as approved.

3.5.6 Duct Line Markers

Duct line markers shall be provided at the ends of long duct line stubouts or for other ducts whose locations are indeterminate because of duct curvature or terminations at completely below-grade structures. In addition to markers, a 5 mil brightly colored plastic tape, not less than 3 inches in width and suitably inscribed at not more than 10 feet on centers with a continuous metallic backing and a corrosion-resistant 1 mil metallic foil core to permit easy location of the duct line, shall be placed approximately 12 inches below finished grade levels of such lines.

3.6 MANHOLES, HANDHOLES, AND PULLBOXES

3.6.1 General

Manholes shall be constructed approximately where shown. The exact location of each manhole shall be determined after careful consideration has been given to the location of other utilities, grading, and paving. The location of each manhole shall be approved by the Contracting Officer before construction of the manhole is started. Manholes shall be the type noted on the drawings and shall be constructed in accordance with the applicable details as indicated. Top, walls, and bottom shall consist of reinforced concrete. Walls and bottom shall be of monolithic concrete construction. The Contractor may at his option utilize monolithically constructed precast-concrete manholes having the required strength and inside dimensions as required by the drawings or specifications. In paved areas, frames and covers for manhole and handhole entrances in vehicular traffic areas shall be flush with the finished surface of the paving. In unpaved areas, the top of manhole covers shall be approximately 1/2 inch above the finished grade. Where existing grades that are higher than finished grades are encountered, concrete assemblies designed for the purpose shall be installed to elevate temporarily the manhole cover to existing grade level. All duct lines entering manholes must be installed on compact soil or otherwise supported when entering a manhole to prevent shear stress on the duct at the point of entrance to the manhole. Duct lines entering cast-in-place concrete manholes shall be cast in-place with the manhole. Duct lines entering precast concrete manholes through a precast knockout penetration shall be grouted tight with a portland cement mortar. PVC duct lines entering precast manholes through a PVC endbell shall be solvent welded to the endbell. A cast metal grille-type sump frame and cover shall be installed over the manhole sump. A cable-pulling iron shall be installed in the wall opposite each duct line entrance.

3.6.2 Electric Manholes

Cables shall be securely supported from walls by hot-dip galvanized cable racks with a plastic coating over the galvanizing and equipped with adjustable hooks and insulators. The number of cable racks indicated shall be installed in each manhole and not less than 2 spare hooks shall be installed on each cable rack. Insulators shall be made of high-glazed porcelain. Insulators will not be required on spare hooks.

3.6.3 Handholes

Handholes shall be located approximately as shown. Handholes shall be of the type noted on the drawings and shall be constructed in accordance with the details shown.

3.6.4 Pullboxes

Pullbox tops shall be flush with sidewalks or curbs or placed 1/2 inch above surrounding grades when remote from curbed roadways or sidewalks. Covers shall be marked "Low-Voltage" and provided with 2 lifting eyes and 2 hold-down bolts. Each box shall have a suitable opening for a ground rod. Conduit, cable, ground rod entrances, and unused openings shall be sealed with mortar.

3.6.5 Ground Rods

A ground rod shall be installed at the manholes, handholes and pullboxes. Ground rods shall be driven into the earth before the manhole floor is poured so that approximately 4 inches of the ground rod will extend above the manhole floor. When precast concrete manholes are used, the top of the ground rod may be below the manhole floor and a No. 1/0 AWG ground conductor brought into the manhole through a watertight sleeve in the manhole wall.

3.7 PAD-MOUNTED EQUIPMENT INSTALLATION

Pad-mounted equipment, shall be installed on concrete pads in accordance with the manufacturer's published, standard installation drawings and procedures, except that they shall be modified to meet the requirements of this document. Units shall be installed so that they do not damage equipment or scratch painted or coated surfaces. After installation, surfaces shall be inspected and scratches touched up with a paint or coating provided by the manufacturer especially for this purpose. Three-phase transformers shall be installed with ABC phase sequence. Primary taps shall be set at 13,800.

3.7.1 Concrete Pads

3.7.1.1 Construction

Concrete pads for pad-mounted electrical equipment may be either pre-fabricated or poured-in-place. Pads shall be constructed as indicated, except that exact pad dimensions and mounting details are equipment specific and are the responsibility of the Contractor. Tops of concrete pads shall be level and shall project 4 inches above finished floor, paving or grade and sloped to drain. Edges of concrete pads shall have 3/4 inch chamfer. Conduits for primary, secondary, and grounding conductors shall be set in place prior to placement of concrete pads. Where grounding electrode conductors are installed through concrete pads, PVC conduit sleeves shall be installed through the concrete to provide physical protection. To facilitate cable installation and termination, the concrete pad shall be provided with a rectangular hole below the primary and secondary compartments, sized in accordance with the manufacturer's recommended dimensions. Upon completion of equipment installation the rectangular hole shall be filled with masonry grout.

3.7.1.2 Concrete and Reinforcement

Concrete work shall have minimum 3000 psi compressive strength and comform to the requirements of Section 03300 CAST-IN-PLACE STRUCTURAL CONCRETE. Concrete pad reinforcement shall be in accordance with Section 03200 CONCRETE REINFORCEMENT.

3.7.1.3 Sealing

When the installation is complete, the Contractor shall seal all conduit and other entries into the equipment enclosure with an approved sealing compound. Seals shall be of sufficient strength and durability to protect all energized live parts of the equipment from rodents, insects, or other foreign matter.

3.7.2 Padlocks

Padlocks shall be provided for pad-mounted equipment. Padlocks shall be keyed as directed by the Contracting Officer. Padlocks shall comply with ASTM F 883.

3.8 CONNECTIONS TO BUILDINGS

Cables shall be extended into the building as indicated, and shall be connected to the first applicable termination point in each building. After installation of cables, conduits shall be sealed with caulking compound to prevent entrance of moisture or gases into buildings.

3.9 GROUNDING

A ground ring consisting of the indicated configuration of bare copper conductors and driven ground rods shall be installed around pad-mounted equipment as shown. Equipment frames of metal-enclosed equipment, and other noncurrent-carrying metal parts, such as cable shields, cable sheaths, and metallic conduit shall be grounded. At least 2 connections shall be provided from a transformer to the ground mat. Metallic frames and covers of handholes and pull boxes shall be grounded by use of a braided, copper ground strap with equivalent ampacity of No. 6 AWG.

3.9.1 Grounding Electrodes

Grounding electrodes shall be installed as shown on the drawings and as follows:

a. Driven rod electrodes - Unless otherwise indicated, ground rods shall be driven into the earth until the tops of the rods are approximately 1 foot below finished grade.

b. Ground mat - A ground mat shall be installed as shown consisting of bare copper conductors installed 18 inches, plus or minus 3 inches, below the finished top of soil grade. Mat conductors shall be bonded to all rod electrodes, electrolytic electrodes, and to all other intersecting mat conductors. Mat conductors shall be sized as shown on the drawings.

c. Ground ring - A ground ring shall be installed as shown consisting of bare copper conductors installed 18 inches, plus or minus 3

inches, below finished top of soil grade. Ground ring conductors shall be sized as shown.

d. Additional electrodes - When the required ground resistance is not met, additional electrodes shall be provided interconnected with grounding conductors to achieve the specified ground resistance. The additional electrodes will be up to three, 10 feet rods spaced a minimum of 10 feet apart, driven perpendicular to grade. In high ground resistance, UL listed chemically charged ground rods may be used. If the resultant resistance exceeds 5 ohms measured not less than 48 hours after rainfall, the Contracting Officer shall be notified immediately.

3.9.2 Grounding and Bonding Connections

Connections above grade shall be made by the fusion-welding process or with bolted solderless connectors, in compliance with UL 467, and those below grade shall be made by a fusion-welding process.

3.9.3 Grounding and Bonding Conductors

Grounding and bonding conductors include conductors used to bond transformer enclosures and equipment frames to the grounding electrode system. Grounding and bonding conductors shall be sized as shown, and located to provide maximum physical protection. Bends greater than 45 degrees in ground conductors are not permitted. Routing of ground conductors through concrete shall be avoided. When concrete penetration is necessary, nonmetallic conduit shall be cast flush with the points of concrete entrance and exit so as to provide an opening for the ground conductor, and the opening shall be sealed with a suitable compound after installation.

3.9.4 Surge Arrester Grounding

Surge arresters shall be bonded to the grounding grid with a bare copper conductor, sized as shown. Lead lengths shall be kept as short as practicable with no kinks or sharp bends.

3.9.5 Manhole, Handhole, or Concrete Pullbox Grounding

Ground rods installed in manholes, handholes, or concrete pullboxes shall be connected to cable racks, cable-pulling irons, the cable shielding, and metallic sheath at each cable joint or splice by means of a No. 4 AWG braided tinned copper wire. Connections to metallic cable sheaths shall be by means of tinned terminals soldered to ground wires and to cable sheaths. Care shall be taken in soldering not to damage metallic cable sheaths or shields. Ground rods shall be protected with a double wrapping of pressure-sensitive plastic tape for a distance of 2 inches above and 6 inches below concrete penetrations. Grounding electrode conductors shall be neatly and firmly attached to manhole or handhole walls and the amount of exposed bare wire shall be held to a minimum.

3.9.6 Metal Splice Case Grounding

Metal splice cases for medium-voltage direct-burial cable shall be grounded by connection to a driven ground rod located within 2 feet of each splice box using a grounding electrode conductor having a current-carrying capacity

of at least 20 percent of the individual phase conductors in the associated splice box, but not less than No. 6 AWG.

3.10 FIELD TESTING

3.10.1 General

Field testing shall be performed in the presence of the Contracting Officer. The Contractor shall notify the Contracting Officer 10 days prior to conducting tests. The Contractor shall furnish all materials, labor, and equipment necessary to conduct field tests. The Contractor shall perform all tests and inspections recommended by the manufacturer unless specifically waived by the Contracting Officer. The Contractor shall maintain a written record of all tests which includes date, test performed, personnel involved, devices tested, serial number and name of test equipment, and test results. Field test reports shall be signed and dated by the Contractor.

3.10.2 Safety

The Contractor shall provide and use safety devices such as rubber gloves, protective barriers, and danger signs to protect and warn personnel in the test vicinity. The Contractor shall replace any devices or equipment which are damaged due to improper test procedures or handling.

3.10.3 Ground-Resistance Tests

The resistance of each grounding electrode system and the ground mat shall be measured using the fall-of-potential method defined in IEEE Std 81. Ground resistance measurements shall be made before the electrical distribution system is energized and shall be made in normally dry conditions not less than 48 hours after the last rainfall. Resistance measurements of separate grounding electrode systems shall be made before the systems are bonded together below grade. The combined resistance of separate systems may be used to meet the required resistance, but the specified number of electrodes must still be provided.

a. Single rod electrode - 5 ohms.

b. Multiple rod electrodes - 5 ohms.

c. Ground mat - 5 ohms.

3.10.4 Ground-Mat Connection Inspection

All below-grade ground-mat connections will be visually inspected by the Contracting Officer before backfilling. The Contractor shall notify the Contracting Officer 4 hours before the site is ready for inspection.

3.10.5 Medium-Voltage Cable Test

After installation and before the operating test or connection to an existing system, the medium-voltage cable system shall be given a high potential test. Direct-current voltage shall be applied on each phase conductor of the system by connecting conductors as one terminal and connecting grounds or metallic shieldings or sheaths of the cable as the other terminal for each test. Prior to making the test, the cables shall be

isolated by opening applicable protective devices and disconnecting equipment. The test shall be conducted with all splices, connectors, and terminations in place. The method, voltage, length of time, and other characteristics of the test for initial installation shall be in accordance with NEMA WC 7 or NEMA WC 8 for the particular type of cable installed, and shall not exceed the recommendations of IEEE Std 404 for cable joints and IEEE Std 48 for cable terminations unless the cable and accessory manufacturers indicate higher voltages are acceptable for testing. Should any cable fail due to a weakness of conductor insulation or due to defects or injuries incidental to the installation or because of improper installation of cable, cable joints, terminations, or other connections, the Contractor shall make necessary repairs or replace cables as directed. Repaired or replaced cables shall be retested.

3.10.6 Low-Voltage Cable Test

Low-voltage cable, complete with splices, shall be tested for insulation resistance after the cables are installed, in their final configuration, ready for connection to the equipment, and prior to energization. The test voltage shall be 500 volts dc, applied for one minute between each conductor and ground and between all possible combinations conductors in the same trench, duct, or cable, with all other conductors in the same trench, duct, or conduit. The minimum value of insulation shall be:

R in megohms = (rated voltage in kV + 1) x 1000/(length of cable in feet

Each cable failing this test shall be repaired or replaced. The repaired cable shall be retested until failures have been eliminated.

3.10.7 Pre-Energization Services

Calibration, testing, adjustment, and placing into service of the installation shall be accomplished by a manufacturer's product field service engineer or independent testing company with a minimum of 2 years of current product experience. The following services shall be performed on the equipment listed below. These services shall be performed subsequent to testing but prior to the initial energization. The equipment shall be inspected to ensure that installation is in compliance with the recommendations of the manufacturer and as shown on the detail drawings. Terminations of conductors at major equipment shall be inspected to ensure the adequacy of connections. Bare and insulated conductors between such terminations shall be inspected to detect possible damage during installation. If factory tests were not performed on completed assemblies, tests shall be performed after the installation of completed assemblies. Components shall be inspected for damage caused during installation or shipment to ensure packaging materials have been removed. Components capable of being both manually and electrically operated shall be operated manually prior to the first electrical operation. Components capable of being calibrated, adjusted, and tested shall be calibrated, adjusted, and tested in accordance with the instructions of the equipment manufacturer. Items for which such services shall be provided, but are not limited to, are the following:

a. Pad-mounted transformers

b. Switches

3.10.8 Operating Tests

After the installation is completed, and at such times as the Contracting Officer may direct, the Contractor shall conduct operating tests for approval. The equipment shall be demonstrated to operate in accordance with the requirements herein. An operating test report shall be submitted in accordance with paragraph SUBMITTALS.

3.11 MANUFACTURER'S FIELD SERVICE

3.11.1 Onsite Training

The Contractor shall conduct a training course for the operating staff as designated by the Contracting Officer. The training period shall consist of a total of 4 hours of normal working time and shall start after the system is functionally completed but prior to final acceptance tests. The course instruction shall cover pertinent points involved in operating, starting, stopping, and servicing the equipment, as well as all major elements of the operation and maintenance manuals. Additionally, the course instructions shall demonstrate all routine maintenance operations.

3.11.2 Installation Engineer

After delivery of the equipment, the Contractor shall furnish one or more field engineers, regularly employed by the equipment manufacturer to supervise the installation of the equipment, assist in the performance of the onsite tests, initial operation, and instruct personnel as to the operational and maintenance features of the equipment.

3.12 ACCEPTANCE

Final acceptance of the facility will not be given until the Contractor has successfully completed all tests and after all defects in installation, material or operation have been corrected.

END OF SECTION

SECTION 16415

ELECTRICAL WORK, INTERIOR

1 GENERAL

1.1 REFERENCES

The publications listed below form a part of this specification to the extent referenced. The publications are referred to in the text by basic designation only.

AMERICAN NATIONAL STANDARDS INSTITUTE (ANSI)

ANSI C12.1	(1988) Code for Electricity Metering
ANSI C12.4	(1984; R 1990) Mechanical Demand Registers
ANSI C12.10	(1987) Electromechanical Watthour Meters
ANSI C37.16	(1988; C37.16a) Low-Voltage Power Circuit Breakers and AC Power Circuit Protectors - Preferred Ratings, Related Requirements, and Application Recommendations
ANSI/IEEE C37.90	(1989) Relays and Relay Systems Associated with Electric Power Apparatus
ANSI C39.1	(1981; R 1992) Electrical Analog Indicating Instruments
ANSI C57.12.10	(1987) Transformers 230 kV and Below 833/958 through 8333/10 417 kVA, Single-Phase, and 750/862 through 60 000/80 000/100 000 kVA, Three-Phase
ANSI C57.12.13	(1982) Conformance Standard for Liquid-Filled Transformers Used in Unit Installations, Including Unit Substations
ANSI C57.12.27	(1982) Conformance Standard for Liquid-Filled Distribution Transformers Used in Pad-Mounted Installations, Including Unit Substations
ANSI C57.12.50	(1981; R 1989) Ventilated Dry-type Distribution Transformers 1 to 500 kVA, Single-Phase; and 15 to 500 kVA, Three-Phase with High-Voltage 601 to 34500 Volts, Low-Voltage 120 to 600 Volts
ANSI C57.12.51	(1981; R 1989) Ventilated Dry-Type Power Transformers, 501 kVA and Larger, Three-Phase, with High-Voltage 601 to 34500 Volts, Low-Voltage 108Y/120 to 4160 Volts

ANSI C57.12.52	(1981; R 1989) Sealed Dry-Type Power Transformers, 501 kVA and Larger, Three-Phase with High-Voltage 601 to 34500 Volts, Low-Voltage 108Y/120 to 4160 Volts
ANSI C57.12.70	(1978; R 1993) Terminal Markings and Connections for Distribution and Power Transformers
ANSI C80.5	(1990) Rigid Aluminum Conduit
ANSI C82.1	(1985; C82.1a; C82.1b; C82.1c; R 1992) Specifications for Fluorescent Lamp Ballasts
ANSI C82.4	(1992) Ballasts for High-Intensity-Discharge and Low-Pressure Sodium Lamps (Multiple-Supply Type)
ANSI C135.30	(1988) Zinc-Coated Ferrous Ground Rods for Overhead or Underground Line Construction

AMERICAN SOCIETY FOR TESTING AND MATERIALS (ASTM)

ASTM B 1	(1990) Hard-Drawn Copper Wire
ASTM B 8	(1993) Concentric-Lay-Stranded Copper Conductors, Hard, Medium-Hard, or Soft
ASTM D 709	(1992) Laminated Thermosetting Materials
ASTM D 4059	(1991) Analysis of Polychlorinated Biphenyls in Insulating Liquids by Gas Chromatography

CODE OF FEDERAL REGULATIONS (CFR)

47 CFR 18	Rules and Regulations: Industrial, Scientific and Medical Equipment

INSTITUTE OF ELECTRICAL AND ELECTRONICS ENGINEERS (IEEE)

IEEE C2	(1997) National Electrical Safety Code
IEEE C37.13	(1990) Low-Voltage AC Power Circuit Breakers Used in Enclosures
IEEE C37.20.1	(1993) Metal-Enclosed Low-Voltage Power Circuit-Breaker Switchgear
IEEE C37.90.1	(1989; R 1994) IEEE Standard Surge Withstand Capability (SWC) for Protective Relays and Relay Systems
IEEE C57.12.00	(1993) IEEE Standard General Requirements for Liquid-Immersed Distribution, Power, and Regulating Transformers
IEEE C57.13	(1993) Instrument Transformers

IEEE C57.12.80	(1978; R 1992) Terminology for Power and Distribution Transformers
IEEE C57.12.90	(1993) Test Code for Liquid-Immersed Distribution, Power, and Regulating Transformers and Guide for Short-Circuit Testing of Distribution and Power Transformers
IEEE C57.98	(1993) Guide for Transformer Impulse Tests
IEEE C57.100	(1986; R 1992) Test Procedure for Thermal Evaluation of Oil-Immersed Distribution Transformers
IEEE C62.41	(1991) Surge Voltages in Low-Voltage AC Power Circuits
IEEE Std 81	(1983) Guide for Measuring Earth Resistivity, Ground Impedance, and Earth Surface Potentials of a Ground System (Part 1)

NATIONAL ELECTRICAL MANUFACTURERS ASSOCIATION (NEMA)

NEMA 250	(1991) Enclosures for Electrical Equipment (1000 Volts Maximum)
NEMA AB 1	(1993) Molded Case Circuit Breakers and Molded Case Switches
NEMA BU 1	(1994) Busways
NEMA FU 1	(1986) Low Voltage Cartridge Fuses
NEMA ICS 1	(1993) Industrial Controls and Systems
NEMA ICS 2	(1993) Industrial Control Devices, Controllers and Assemblies
NEMA ICS 3	(1993) Industrial Systems
NEMA ICS 6	(1993) Enclosures for Industrial Control and Systems
NEMA LE 4	(1987) Recessed Luminaries, Ceiling Compatibility
NEMA MG 1	(1993; Rev 1-1993; Rev 2-1995) Motors and Generators
NEMA MG 10	(1994) Energy Management Guide for Selection and Use of Polyphase Motors
NEMA OS 1	(1989) Sheet-Steel Outlet Boxes, Device Boxes, Covers, and Box Supports

NEMA OS 2	(1986; Errata Aug 1986; R 1991) Nonmetallic Outlet Boxes, Device Boxes, Covers and Box Supports
NEMA PB 1	(1990) Panelboards
NEMA PB 2	(1989) Deadfront Distribution Switchboards
NEMA PE 5	(1985; R 1991) Utility Type Battery Chargers
NEMA RN 1	(1989) Polyvinyl-Chloride (PVC) Externally Coated Galvanized Rigid Steel Conduit and Intermediate Metal Conduit
NEMA ST 20	(1992) Dry-Type Transformers for General Applications
NEMA TC 2	(1990) Electrical Polyvinyl Chloride (PVC) Tubing (EPT) and Conduit (EPC-40 and EPC-80)
NEMA TC 13	(1993) Electrical Nonmetallic Tubing (ENT)
NEMA VE 1	(1991) Power Line Carrier Coupling Capacitors
NEMA WD 1	(1983; R 1989) General Requirements for Wiring Devices
NEMA WD 6	(1988) Wiring Devices - Dimensional Requirements

NATIONAL FIRE PROTECTION ASSOCIATION (NFPA)

NFPA 70	(1996) National Electrical Code
NFPA 101	(1994) Safety to Life from Fire in Buildings and Structures
NFPA 110	(1993) Emergency and Standby Power Systems

UNDERWRITERS LABORATORIES (UL)

UL-03	(1995) Electrical Construction Materials Directory
UL 1	(1993; Rev thru Jan 1995) Flexible Metal Conduit
UL 4	(1986; Rev thru Nov 1990) Armored Cable
UL 5	(1995) Surface Metal Raceways and Fittings
UL 6	(1993) Rigid Metal Conduit
UL 20	(1995) General-Use Snap Switches
UL 44	(1991; Rev thru Jun 1996) Rubber-Insulated Wires and Cables

UL 50	(1995) Enclosures for Electrical Equipment
UL 67	(1993; Rev thru Dec 1993) Panelboards
UL 83	(1991; Rev thru Apr 1996) Thermoplastic-Insulated Wires and Cables
UL 98	(1994; R Oct 1995) Enclosed and Dead-Front Switches
UL 198B	(1995) Class H Fuses
UL 198C	(1986; Rev thru Jun 1993) High-Interrupting-Capacity Fuses, Current-Limiting Types
UL 198D	(1995) Class K Fuses
UL 198E	(1988; Rev Jul 1988) Class R Fuses
UL 198G	(1988; Rev May 1988) Fuses for Supplementary Overcurrent Protection
UL 198H	(1988; Rev thru Nov 1993) Class T Fuses
UL 198L	(1995; Rev May 1995) D-C Fuses for Industrial Use
UL 360	(1986; Rev thru Dec 1995) Liquid-Tight Flexible Steel Conduit
UL 467	(1993; Rev Nov 95) Grounding and Bonding Equipment
UL 486A	(1991; Rev Oct 1991) Wire Connectors and Soldering Lugs for Use with Copper Conductors
UL 486B	(1991; Errata Rev thru Aug 1995) Wire Connectors for Use with Aluminum Conductors
UL 486C	(1991; Rev thru Aug 1995) Splicing Wire Connectors
UL 489	(1991; Rev thru Jun 1995) Molded-Case Circuit Breakers and Circuit-Breaker Enclosures
UL 498	(1991; Rev thru Oct 1995) Attachment Plugs and Receptacles
UL 506	(1994; Rev Jul 1994) Specialty Transformers
UL 508	(1993) Industrial Control Equipment
UL 510	(1994) Insulating Tape
UL 512	(1993; R Dec 1995) Fuseholders

UL 514A	(1991; Rev Jun 1996) Metallic Outlet Boxes
UL 514B	(1989; Rev thru Apr 1995) Fittings for Conduit and Outlet Boxes
UL 514C	(1988; Rev Apr 1995) Nonmetallic Outlet Boxes, Flush-Device Boxes, and Covers
UL 542	(1994) Lampholders, Starters, and Starter Holders for Fluorescent Lamps
UL 651	(1995) Schedule 40 and 80 Rigid PVC Conduit
UL 651A	(1995) Type EB and A Rigid PVC Conduit and HDPE Conduit
UL 674	(1994; Rev thru Jul 1995) Electric Motors and Generators for Use in Division 1 Hazardous (Classified) Locations
UL 698	(1995; Rev thru Mar 1996) Industrial Control Equipment for Use in Hazardous (Classified) Locations
UL 719	(1985; Rev thru Jun 1996) Nonmetallic-Sheathed Cables
UL 797	(1993; Rev May 1995) Electrical Metallic Tubing
UL 817	(1994; Rev thru May 1996) Cord Sets and Power-Supply Cords
UL 844	(1995) Electric Lighting Fixtures for Use in Hazardous (Classified) Locations
UL 845	(1995; Rev Feb 1996) Motor Control Centers
UL 854	(1996) Service Entrance Cables
UL 857	(1994; Rev Oct 1994) Busways and Associated Fittings
UL 869A	(1993; Rev Apr 1994) Reference Standard for Service Equipment
UL 877	(1993; Rev Jul 1995) Circuit Breakers and Circuit-Breaker Enclosures for Use in Hazardous (Classified) Locations
UL 886	(1994; Rev thru Jul 1995) Outlet Boxes and Fittings for Use in Hazardous (Classified) Locations
UL 891	(1994; Rev thru Jan 1995) Dead-Front Switchboards

UL 924	(1990; Rev May 1995) Emergency Lighting and Power Equipment
UL 935	(1995; Rev Jun 1995) Fluorescent-Lamp Ballasts
UL 943	(1993; Rev thru Apr 1996) Ground-Fault Circuit Interrupters
UL 1004	(1994; Rev thru May 1996) Electric Motors
UL 1008	Automatic Transfer Switches
UL 1010	(1995; Rev thru Mar 1996) Receptacle-Plug Combinations for Use in Hazardous (Classified) Locations
UL 1022	(1994) Line Isolation Monitors
UL 1029	(1994; Rev Sep 1995) High-Intensity-Discharge Lamp Ballasts
UL 1047	(1995) Isolated Power Systems Equipment
UL 1236	(1994; Rev thru Apr 1996) Battery Chargers for Charging Engine-Starter Batteries
UL 1242	(1983; Rev thru Jul 1993) Intermediate Metal Conduit
UL 1449	(1985; Errata Apr 1986) Transient Voltage Surge Suppressors
UL 1564	(1993; Rev Apr 1994) Industrial Battery Chargers
UL 1569	(1995) Metal-Clad Cables
UL 1570	(1995) Fluorescent Lighting Fixtures
UL 1571	(1995; Rev thru Mar 1995) Incandescent Lighting Fixtures
UL 1572	(1995; Rev thru May 1996) High Intensity Discharge Lighting Fixtures
UL 1660	(1994) Liquid-Tight Flexible Nonmetallic Conduit
UL 1778	Uninterruptible Power Supply Equipment

1.2 GENERAL

1.2.1 Rules

The installation shall conform to the requirements of NFPA 70 and NFPA 101, unless more stringent requirements are indicated herein or shown.

1.2.2 Coordination

The drawings indicate the extent and the general location and arrangement of equipment, conduit, and wiring. The Contractor shall become familiar with all details of the work and verify all dimensions in the field so that the outlets and equipment shall be properly located and readily accessible. Lighting fixtures, outlets, and other equipment and materials shall be located to avoid interference with mechanical or structural features; otherwise, lighting fixtures shall be symmetrically located according to the room arrangement when uniform illumination is required, or asymmetrically located to suit conditions fixed by design and shown. Raceways, junction and outlet boxes, and lighting fixtures shall not be supported from sheet metal roof decks. If any conflicts occur necessitating departures from the drawings, details of and reasons for departures shall be submitted and approved prior to implementing any change. The Electrical Contractor shall coordinate electrical work with the HVAC and electrical drawings and specifications and provide power related wiring.

1.2.3 Special Environments

1.2.3.1 Weatherproof Locations

Wiring, Fixtures, and equipment in designated locations shall conform to NFPA 70 requirements for installation in damp or wet locations.

1.2.3.2 Hazardous Locations

Wiring and equipment in locations indicated shall be of the classes, groups, divisions, and suitable for the operating temperature; as indicated.

1.2.3.3 Ducts, Plenums and Other Air-Handling Spaces

Wiring and equipment in ducts, plenums and other air-handling spaces shall be installed using materials and methods in conformance with NFPA 70unless more stringent requirements are indicated in this specification or on the contract drawings.

1.2.4 Standard Products

Material and equipment shall be a standard product of a manufacturer regularly engaged in the manufacture of the product and shall essentially duplicate items that have been in satisfactory use for at least 2 years prior to bid opening.

1.2.5 NAMEPLATES

1.2.5.1 Identification Nameplates

Major items of electrical equipment and major components shall be permanently marked with an identification name to identify the equipment by type or function and specific unit number as indicated. Designation of motors shall coincide with their designation in the motor control equipment or panel. Unless otherwise specified, identification nameplates shall be made of laminated plastic in accordance with ASTM D 709 with black outer layers and a white core. Edges shall be chamfered. Plates shall be fastened with black-finished round-head drive screws, except motors, or

approved nonadhesive metal fasteners. When the nameplate is to be installed on an irregular-shaped object, the Contractor shall devise an approved support suitable for the application and ensure the proper installation of the supports and nameplates. In all instances, the nameplate shall be installed in a conspicuous location. At the option of the Contractor, the equipment manufacturer's standard embossed nameplate material with black paint-filled letters may be furnished in lieu of laminated plastic. The front of each panelboard, transfer switch, battery equipment, and switchboard shall have a nameplate to indicate the phase letter, corresponding color and arrangement of the phase conductors. The following equipment, as a minimum, shall be provided with identification nameplates:

Minimum 1/4 inch High Letters	Minimum 1/8 inch High Letters
Panelboards	Control Power Transformers
Starters	Control Devices
Safety Switches	Instrument Transformers
Transformers	
Equipment Enclosures	
Switchboards	
Motors	
Transfer Switches	
Battery Equipment	

Each panel, section, or unit in switchboards or similar assemblies shall be provided with a nameplate in addition to nameplates listed above, which shall be provided for individual compartments in the respective assembly, including nameplates which identify "future," "spare," and "dedicated" or "equipped spaces."

1.2.6 As-Built Drawings

Following the project completion or turnover, within 30 days the Contractor shall furnish two sets of as-built drawings to the Contracting Officer.

1.3 SUBMITTALS

Government approval is required for submittals with a "GA" designation; submittals having an "FIO" designation are for information only. The following shall be submitted in accordance with Section 01330 SUBMITTAL PROCEDURES:

SD-01 Data

Manufacturer's Catalog; FIO.

Data composed of catalog cuts, brochures, circulars, specifications, product data, and printed information in sufficient detail and scope to verify compliance with the requirements of the contract documents.

Material, Equipment, and Fixture Lists; GA.

A complete itemized listing of equipment and materials proposed for incorporation into the work. Each entry shall include an item number, the quantity of items proposed, and the name of the manufacturer of each item.

Installation Procedures; FIO.

Installation procedures for rotating equipment, transformers, transfer switches, and battery systems. Procedures shall include diagrams, instructions, and precautions required to install, adjust, calibrate, and test devices and equipment.

SD-04 Drawings

Interior Electrical Equipment; FIO.

Detail drawings consisting of equipment drawings, illustrations, schedules, instructions, diagrams, and other information necessary to define the installation. Detail drawings shall show the rating of items and systems and how the components of an item and system are assembled, function together, and how they will be installed on the project. Data and drawings for component parts of an item or system shall be coordinated and submitted as a unit. Data and drawings shall be coordinated and included in a single submission. Multiple submissions for the same equipment or system are not acceptable except where prior approval has been obtained from the Contracting Officer. In such cases, a list of data to be submitted later shall be included with the first submission. Detail drawings shall show physical arrangement, construction details, connections, finishes, materials used in fabrication, provisions for conduit entrance, access requirements for installation and maintenance, physical size, electrical characteristics, foundation and support details, and equipment weight. Drawings shall be drawn to scale and/or dimensioned. Optional items shall be clearly identified as included or excluded. Detail drawings shall as a minimum include:

a. Transformers.

b. Battery system including calculations for the battery and charger.

c. Single line electrical diagrams including primary, metering.

d. Sway bracing for suspended luminaries.

Structural drawings showing the structural or physical features of major equipment items, components, assemblies, and structures, including foundations or other types of supports for equipment and conductors. These drawings shall include accurately scaled or dimensioned outline and arrangement or layout drawings to show the physical size of equipment and components and the relative arrangement and physical connection of related components. Weights of equipment, components and assemblies shall be provided when required to verify the adequacy of design and proposed construction of foundations or other types of supports. The appropriate detail drawings shall show the provisions for leveling, anchoring, and connecting all items during installation, and shall include any recommendations made by the manufacturer.

Electrical drawings including single-line diagrams, and schematics or elementary diagrams of each electrical system; internal wiring and field

connection diagrams of each electrical device when published by the manufacturer; wiring diagrams of cabinets, panels, units, or separate mountings; interconnection diagrams that show the wiring between separate components of assemblies; field connection diagrams that show the termination of wiring routed between separate items of equipment; internal wiring diagrams of equipment showing wiring as actually provided for this project. Field wiring connections shall be clearly identified.

If departures from the contract drawings are deemed necessary by the contractor, complete details of such departures, including changes in related portions of the project and the reasons why, shall be submitted with the detail drawings. Approved departures shall be made at no additional cost to the Government.

As-Built Drawings; GA.

The as-built drawings shall be a record of the construction as installed. The drawings shall include all the information shown on the contract drawings, deviations, modifications, and changes from the contract drawings, however minor. The as-built drawings shall be kept at the job site and updated daily. The as-built drawings shall be a full-sized set of prints marked to reflect all deviations, changes, and modifications. The as-built drawings shall be complete and show the location, size, dimensions, part identification, and other information. Additional sheets may be added. The as-built drawings shall be jointly inspected for accuracy and completeness by the contractor's quality control representative and by the Contracting Officer prior to the submission of each monthly pay estimate. Upon completion of the work, the contractor shall submit three full sized sets of the marked prints to the Contracting Officer for approval. If upon review, the as-built drawings are found to contain errors and/or omissions, they will be returned to the contractor for correction. The contractor shall correct and return the as-built drawings to the Contracting Officer for approval within ten calendar days from the time the drawings are returned to the contractor.

SD-08 Statements

On-Site Test; FIO.

A detailed description of the contractor's proposed procedures for on-site tests.

SD-09 Reports

Factory Test Reports; FIO.

Six copies of the information described below in 8 1/2 by 11 inch binders having a minimum of 5 rings from which material may readily be removed and replaced, including a separate section for each test. Sections shall be separated by heavy plastic dividers with tabs.

a. A list of equipment used, with calibration certifications.

b. A copy of measurements taken.

c. The dates of testing.

d. The equipment and values to be verified.

e. The conditions specified for the test.

f. The test results, signed and dated.

g. A description of adjustments made.

Field Test Plan; GA.

A detailed description of the Contractor's proposed procedures for on-site test submitted 30 days prior to testing the installed system. No field test will be performed until the test plan is approved. The test plan shall consist of complete field test procedures including tests to be performed, test equipment required, and tolerance limits.

Field Test Reports; GA.

Six copies of the information described below in 8 1/2 by 11 inch binders having a minimum of 5 rings from which material may readily be removed and replaced, including a separate section for each test. Sections shall be separated by heavy plastic dividers with tabs.

a. A list of equipment used, with calibration certifications.

b. A copy of measurements taken.

c. The dates of testing.

d. The equipment and values to be verified.

e. The conditions specified for the test.

f. The test results, signed and dated.

g. A description of adjustments made.

h. Final position of controls and device settings.

SD-13 Certificates

Materials and Equipment; GA.

The label or listing of the Underwriters Laboratories, Inc., will be accepted as evidence that the materials or equipment conform to the applicable standards of that agency. In lieu of this label or listing, a statement from a nationally recognized, adequately equipped testing agency indicating that the items have been tested in accordance with required procedures and that the materials and equipment comply with all contract requirements will be accepted. However, materials and equipment installed in hazardous locations must bear the UL label unless the data submitted from other testing agency is specifically approved in writing by the Contracting Officer. Items which are required to be listed and labeled in accordance with Underwriters Laboratories must be affixed with a UL label that states that it is UL listed. No exceptions or waivers will be granted to this requirement. Materials and equipment will be approved based on the manufacturer's published data.

For other than equipment and materials specified to conform to UL publications, a manufacturer's statement indicating complete compliance with the applicable standard of the American Society for Testing and Materials, National Electrical Manufacturers Association, or other commercial standard, is acceptable.

Communications System Installer; GA.

Qualifications of the communications system installer.

1.4 WORKMANSHIP

Materials and equipment shall be installed in accordance with NFPA 70, recommendations of the manufacturer, and as shown.

2 PRODUCTS

2.1 MATERIALS AND EQUIPMENT

Materials and equipment shall conform to the respective publications and other requirements specified below. Materials and equipment not listed below shall be as specified elsewhere in this section.

2.1.1 Cables and Wires

Conductors No. 8 AWG and larger diameter shall be stranded. Conductors No. 10 AWG and smaller diameter shall be solid, except that conductors for remote control, alarm, and signal circuits, classes 1, 2, and 3, shall be stranded unless specifically indicated otherwise. Conductor sizes and ampacities shown are based on copper, unless indicated otherwise. All conductors shall be copper.

2.1.1.1 Equipment Manufacturer Requirements

When manufacturer's equipment requires copper conductors at the terminations or requires copper conductors to be provided between components of equipment, provide copper conductors or splices, splice boxes, and other work required to meet manufacturer's requirements.

2.1.1.2 Aluminum Conductors

Aluminum conductors shall not be used.

2.1.1.3 Insulation

Unless indicated otherwise, or required by NFPA 70, power and lighting wires shall be 600-volt, Type THWN, THHN, or THW conforming to UL 83, except that grounding wire may be type TW conforming to UL 83; remote-control and signal circuits shall be Type TW, THW or TF, conforming to UL 83. Where lighting fixtures require 90-degree Centigrade (C) conductors, provide only conductors with 90-degree C insulation or better.

2.1.1.4 Bonding Conductors

ASTM B 1, solid bare copper wire for sizes No. 8 AWG and smaller diameter; ASTM B 8, Class B, stranded bare copper wire for sizes No. 6 AWG and larger diameter.

2.1.1.5 Cord Sets and Power-Supply Cords

UL 817.

2.1.2 Cable Trays

Ladder-type cable trays with rungs on 6 inch centers shall form a wireway system, and shall be of nominal 4 inch depth. Cable trays shall be constructed of aluminum. Trays shall include splice and end plates, dropouts, and miscellaneous hardware. Edges, fittings, and hardware shall be finished free from burrs and sharp edges. Fittings shall have not less than the load-carrying ability of straight tray sections and shall have manufacturer's minimum standard radius. Radius of bends shall be 12 inches.

2.1.3 Transient Voltage Surge Protection

Transient voltage surge suppressors shall be provided as indicated. Surge suppressors shall meet the requirements of IEEE C62.41 and be UL listed and labeled as having been tested in accordance with UL 1449. Surge suppressor ratings shall be 208 volts rms, operating voltage; 60 Hz; 3-phase; 4 wire with ground; transient suppression voltage (peak let-through voltage) of 400 volts. Fuses shall not be used as surge suppression.

2.1.4 Central Battery Emergency Lighting System

On-line, conditioned power system meeting the requirements of UL 924 and UL 1778. System shall provide automatic transfer from utility power to battery power upon loss of utility power. Capable of powering any combination of electronic ballast, power factor corrected ballast, and self-ballasted fluorescent, incandescent or HID lighting.The system shall have overload and short circuit protection, a low-battery voltage disconnect, brownout protection, and shall supply a sinusoidal output waveform with 5 percent or less total harmonic distortion at rated load. Provide automatic charger; self-diagnostic, programmable system testing capability with automatic recording of test results; auxiliary contacts for remote monitoring of system trouble, a microprocessor-controlled, removable, diagnostic display panel capable of audible alarms and visual displays with automatic recording of all alarm and inverter events; a DC to AC converter (inverter); AC and DC input protection; a battery-bank sized for 2 hours at full KW rating at unity power factor; and an RS232 communication interface with selectable transmission rates of 50 to 38,400 baud. The system shall be rated for 10 KW output. Input voltage, 277V, one phase, 60 HZ. Output voltage, 277V, one phase, 60 HZ. Provide output circuit breakers as shown. Provide normally off relays for switched lights as shown. The system shall have a minimum AIC rating of 22,000 RMS symmetrical amperes. The batteries shall provide sufficient power to maintain the output voltage of the inverter for the full discharge period, maintaining 87.5 percent of nominal battery voltage. The batteries are to be enclosed in a cabinet that permits easy maintenance without removal. Batteries shall be sealed Lead-Calcium, 10 year warranty. System shall be installed in a free-standing, dead-front

NEMA 1 steel cabinet with hinged doors. Provide system startup per manufacturer's recommendations.

2.1.5 Circuit Breakers

Circuit breakers shall have voltage, current and interrupting ratings as indicated. Series rated circuit breakers, in combinations approved for series applications by UL, may be provided to obtain the specified interrupting rating. Panelboards or individual enclosures containing series rated circuit breakers shall be appropriately marked for use with the specified breakers at the designated short circuit level. Circuit breakers shall be bolt on type.

2.1.5.1 Molded-Case Circuit Breakers

NEMA AB 1 and UL 489 for circuit breakers.

a. Molded-Case Circuit Breakers: Single-pole breakers shall be full module size; two poles shall not be installed in a single module. Multipole breakers shall be of the common-trip type having a single operating handle, but for sizes of 100 amperes or less may consist of single-pole breakers permanently factory assembled into a multipole unit having an internal, mechanical, nontamperable common-trip mechanism and external handle ties.

2.1.5.2 Ground Fault Circuit Interrupters

UL 943. Breakers equipped with ground fault circuit interrupters shall have ground fault class, interrupting capacity, and voltage and current ratings as indicated.

2.1.6 Conduit and Tubing

2.1.6.1 Electrical, Zinc-Coated Steel Metallic Tubing (EMT)

UL 797.

2.1.6.2 Flexible Conduit, Steel

General-purpose type, UL 1; liquid tight, UL 360.

2.1.6.3 Intermediate Metal Conduit

UL 1242.

2.1.6.4 PVC Coated Rigid Steel Conduit

NEMA RN 1.

2.1.6.5 Rigid Metal Conduit

UL 6.

2.1.6.6 Rigid Plastic

NEMA TC 2, UL 651 and UL 651A.

2.1.6.7 Surface Metal Electrical Raceways and Fittings

UL 5.

2.1.7 Conduit and Device Boxes and Fittings

2.1.7.1 Boxes, Metallic Outlet

NEMA OS 1 and UL 514C.

2.1.7.2 Boxes, Outlet for Use in Hazardous (Classified) Locations

UL 886.

2.1.7.3 Boxes, Switch (Enclosed), Surface-Mounted

UL 98.

2.1.7.4 Fittings for Conduit and Outlet Boxes

UL 514B.

2.1.7.5 Fittings For Use in Hazardous (Classified) Locations

UL 886.

2.1.7.6 Fittings, PVC, for Use with Rigid PVC Conduit and Tubing

UL 514B.

2.1.8 Conduit Coatings Plastic Resin System

NEMA RN 1, Type A-40.

2.1.9 Connectors, Wire Pressure

2.1.9.1 For Use With Copper Conductors

UL 486A.

2.1.10 Electrical Grounding and Bonding Equipment

UL 467.

2.1.10.1 Ground Rods

Ground rods shall be of copper-clad steel conforming to UL 467 not less than 3/4 inch in diameter by 10 feet in length of the sectional type driven full length into the earth.

2.1.10.2 Ground Bus

The ground bus shall be bare conductor or flat copper in one piece, if practicable.

2.1.11 Enclosures

NEMA ICS 6 of NEMA 250, unless otherwise specified.

2.1.11.1 Cabinets and Boxes

Cabinets and boxes with volume greater than 100 cubic inches shall be in accordance with UL 50, hot-dip, zinc-coated, if sheet steel.

2.1.11.2 Circuit Breaker

UL 489.

2.1.12 Fixtures, Lighting and Fixture Accessories/Components

Referenced hereinafter and enclosed as an integral part of these specifications, fixtures shown on contract drawings, and UL 844 for fixtures to be installed in hazardous (classified) locations. Fixtures, accessories and components, including ballasts, lampholders, lamps, starters and starter holders, shall conform to industry standards specified below.

2.1.12.1 Fluorescent

a. Fixture: NEMA LE 4 for ceiling compatibility of recessed fixtures and UL 1570. Fixtures shall be plainly marked for proper lamp and ballast type to identify lamp diameter, wattage, color and start type. Marking shall be readily visible to service personnel, but not visible from normal viewing angles.

b. Ballasts:

(1) Electronic Ballast. Electronic ballasts shall consist of a rectifier, high frequency inverter, and power control and regulation circuitry. The ballasts shall be UL listed, Class P, with a Class A sound rating and shall contain no PCBs. Ballasts shall meet 47 CFR 18 for electromagnetic interference and shall not interfere with the operation of other electrical equipment. Design shall withstand line transients per IEEE C62.41, Category A. Unless otherwise indicated, the minimum number of ballasts shall be used to serve each individual fixture, using one, two, three or four lamp ballasts. A single ballast may be used to serve a maximum of two fixtures if they are factory manufactured for that installation, are identically controlled, and the manufacturer's maximum lead length from ballast to lamp are maintained.

(a) Light output regulation shall be +/- 10%.

(b) Voltage input regulation shall be +/- 10%.

(c) Lamp current crest factor shall be no more than 1.6.

(d) Ballast factor shall be not less than 85% nor more than 100%, unless otherwise indicated.

(e) A 60 Hz filter shall be provided. Flicker shall be no more than 10% with any lamp suitable for the ballast.

(f) Ballast case temperature shall not exceed 25 degree Celsius rise above 40 degree Celsius ambient, when tested in accordance with UL 935.

(g) Total harmonic distortion shall be in the range of 10-20%.

(h) Power factor shall not be less than 0.95.

(i) Ballasts shall operate at a frequency of 20 kHz or more.

(j) Operating filament voltage shall be 2.5 to 4.5 volts.

(k) Warranty. Three year full warranty including a $10 labor allowance.

(l) Ballast Efficacy Factor (BEF) shall be in accordance with the following table. Ballasts and lamps shall be matching rapid start or instant start as indicated on the following table. If 32W-F32-T8 lamps and ballasts are used, they must be either all rapid start.

ELECTRONIC FLUORESCENT BALLAST EFFICACY FACTORS

LAMP TYPE	TYPE OF STARTER & LAMP	NOMINAL OPERATIONAL INPUT VOLTAGE	NUMBER OF LAMPS	MIN. BALLAST EFFICACY FACTOR
32W F32 T8	rapid start	120 or 277 V	1	2.4
			2	1.4
			3	1.0
			4	0.8

*For ballasts not specifically designed for use with dimming controls

The BEF is calculated using the formula:

BEF = Ballast Factor (in percent) / Power Input

Where Power Input = Total Wattage of Combined Lamps and Ballasts.

c. Lampholders, Starters, and Starter Holders: UL 542.

2.1.12.2 High-Intensity-Discharge

a. Fixture: NEMA LE 4 for ceiling compatibility of recessed fixtures and UL 1572.

b. Ballasts: ANSI C82.4 for multiple supply types and UL 1029.

2.1.12.3 Preset Dimming System

Preset, multi-scene dimming system; U.L. Listed for dimming or incandescent, fluorescent and magnetic low-voltage transformer loads. System shall be complete, including control unit, enclosures, cabling and auxiliary device indicated on drawings. System shall be 6-zone and have 4 preset scenes. Individiual dimming zones shall be capable of dimming loads scheduled.

2.1.13 Fuses and Fuseholders

2.1.13.1 Fuses, Low Voltage Cartridge Type

NEMA FU 1.

2.1.13.2 Fuses, High-Interrupting-Capacity, Current-Limiting Type

UL 198C.

2.1.13.3 Fuses, Class R

UL 198E.

2.1.13.4 Fuses for Supplementary Overcurrent Protection

UL 198G.

2.1.13.5 Fuseholders

UL 512.

2.1.14 Instruments, Electrical Indicating

ANSI C39.1.

2.1.15 Motor Controls

NEMA ICS 1, NEMA ICS 2, NEMA ICS 3 and NEMA ICS 6, and UL 508.

2.1.16 Receptacles

2.1.16.1 Standard Grade

UL 498.

2.1.16.2 Ground Fault Interrupters

UL 943, Class A or B.

2.1.16.3 NEMA Standard Receptacle Configurations

NEMA WD 6.

a. Single and Duplex, 15-Ampere and 20-Ampere, 125 Volt 15-ampere, non-locking: NEMA type 5-15R, locking: NEMA type L5-15R, 20-ampere, non-locking: NEMA type 5-20-R, locking: NEMA type L5-20R.

b. 15-Ampere, 250 Volt

Two-pole, 3-wire grounding, non-locking: NEMA type 6-15R, locking: NEMA type L6-15R. Three-pole, 4-wire grounding, non-locking: NEMA type 15-15R, locking: NEMA type L15-15R.

c. 20-Ampere, 250 Volt

Two-pole, 3-wire grounding, non-locking: NEMA type 6-20R, locking: NEMA type L6-20R. Three-pole, 4-wire grounding, non-locking: NEMA type 15-20R, locking: NEMA type L15-20R.

d. 30-Ampere, 125/250 Volt

Three-pole, 3-wire, non-locking: NEMA type 10-30R, locking: NEMA type L10-30R. Three-pole, 4-wire grounding, non-locking: NEMA type 14-30R, locking: NEMA type L14-30R.

e. 30-Ampere, 250 Volt

Two-pole, 3-wire grounding, non-locking: NEMA type 6-30R, locking: NEMA type L6-30R. Three-pole, 4-wire grounding, non-locking: NEMA type 15-30R, locking: NEMA type L15-30R.

f. 50-Ampere, 125/250 Volt

Three-pole, 3-wire: NEMA type 10-50R. Three-pole, 4-wire grounding: NEMA type 14-50R.

g. 50-Ampere, 250 Volt

Two-pole, 3-wire grounding: NEMA type 6-50R. Three-pole, 4-wire grounding: NEMA type 15-50R.

2.1.17 Service Equipment

UL 869A.

2.1.18 Splice, Conductor

UL 486C.

2.1.19 Switchboard, Dead Front Distribution

NEMA PB 2 and UL 891.

2.1.20 Snap Switches

UL 20.

2.1.21 Tapes

2.1.21.1 Plastic Tape

UL 510.

2.1.21.2 Rubber Tape

UL 510.

2.1.22 Transformers

Single- and three-phase transformers shall have two windings per phase. Full-capacity standard NEMA taps shall be provided in the primary windings of transformers unless otherwise indicated. Three-phase transformers shall be configured with delta-wye windings, except as indicated. "T" connections may be used for transformers rated 15 kVA or below. Transformers supplying non-linear loads shall be UL listed as suitable for supplying such loads with a total K-factor not to exceed K-13 and have neutrals sized for 200 percent of rated current. Windings shall be copper.

2.1.22.1 Transformers, Dry-Type

Transformers shall have 220 degrees C insulation system for transformers 15 kVA and greater, and shall have 180 degrees C insulation system for transformers rated 10 kVA and less, with temperature rise not exceeding 150 degrees C under full-rated load in maximum ambient temperature of 40 degrees C. Transformer of 150 degrees C temperature rise shall be capable of carrying continuously 100 percent of nameplate kVA without exceeding insulation rating.

a. 600 Volt or Less Primary:

NEMA ST 20, UL 506, general purpose, dry-type, self-cooled, ventilated epoxy-resin cast coil. Provide transformers in NEMA 1 enclosure.

2.1.22.2 Average Sound Level

The average sound level in decibels (dB) of transformers shall not exceed the following dB level for the applicable kVA rating range listed unless otherwise indicated:

kVA Range	dB Sound Level
1-50	50
51-150	55
151-300	58
301-500	60

2.1.23 Electronic Meters

Electronic meters shall be UL listed, CSA certified, and conform with ANSI/IEEE C37.90. Meters and all associated equipment shall be integrally mounted within the switchboard enclosure. Provide metering of the following function: AC amperes each phase, 1 percent accuracy; AC voltage phase-to-phase and phase-to-neutral, 1 percent accuracy; watts, 2 percent accuracy; power factor, 4 percent accuracy; frequency, 0.5 percent accuracy; watt demand with programmable interval, 2 percent accuracy; and watt-hours, 2 percent accuracy.

An LED display shall be installed and shall be accessible without opening any doors or covers. Unit shall display all functions listed above. Provide pulsed output to energy management system in accordance with Division 15 requirements.

2.1.24 Wiring Devices

NEMA WD 1 for wiring devices, and NEMA WD 6 for dimensional requirements of wiring devices.

2.1.25 Panelboards

Dead-front construction, NEMA PB 1 and UL 67. Copper bus only. Panelboards shall be bolt-on circuit breaker type. Provide 200 percent rated neutral and isolated ground bar (insulated from cabinet) for all panels which are designated for computer loads.

2.1.26 Manual Transfer Switch

Manual transfer switch shall be the electrically-operated contactor type which shall be manufactured and tested in accordance with applicable requirements of IEEE C37.90.1, NEMA ICS 1, NEMA ICS 2, and UL 1008 and also conform to NFPA 110 except that the manual transfer switch shall not be equipped with either overload or fault current protective devices. The manual transfer switch shall be designed and manufactured to prevent stops in an intermediate or neutral position during transfer by the use of electrical actuators and stored-energy mechanisms. The manual transfer switch designed and manufactured to effect transfers by a walking-beam or a similar device to engage handles of circuit breakers to accomplish transfer between power sources are unacceptable. Each pole of the doublethrow manual transfer switch shall have separate contacts of a nonwelding type with switch contacts installed to permit viewing of the contacts without disassembly of the switch or removal of the entire contact enclosure, or component parts of the switch. Switch shall be rated for continuous duty at the 24 hours continuous current rating specified. All rating data shall be shown on detail drawings, and shall equal or exceed those specified. The

switch shall be adequately rated for the application indicated, and shall have the following characteristics:

a. Voltage: 480 volts ac.

b. Number of Phases: Three.

c. Number of Wires: Four.

d. Frequency: 60 Hz.

e. Number of Switched Poles: Three.

f. Type of Load: Total system load shown.

g. Continuous Phase or Main Current Rating: Equal to or exceed the rating shown but, in no case, less than 125 percent of the full load rating of the power source.

h. Manual Transfer Switch Withstand Rating (Fault Current Availability Rating): Rated to withstand an available fault or short-circuit current of 30,000 amperes, RMS symmetrical, at a power factor between 0.0 and approximately 0.20, for a duration of 3 cycles at a maximum voltage of 480 ac.

i. Overload Rating: 50,000 amperes, RMS symmetrical.

j. Nonwelding of Contacts: Rated for nonwelding of contacts when used with the feeder overcurrent devices indicated on the drawings and with the available fault current specified herein.

k. Main and Neutral Contacts: Contacts shall have a silver composition and shall be protected by approved arcing contacts. Neutral contacts shall have not less than 1.5 times the continuous current rating of the main or phase contacts.

l. Auxiliary Contacts: Two normally open and two normally closed auxiliary switches shall operate when the transfer switch is connected to the preferred power source, and two normally open and two normally closed switches shall operate when the transfer switch is connected to the alternate emergency power source.

m. Operator: A manual operator, conforming to the applicable provisions of UL 1008, shall be provided to permit manual operation without opening the manual transfer switch enclosure, and incorporate features to prevent operation by other than authorized and qualified personnel.

n. Transfer to Normal: A green indicating light shall supervise the normal power source and shall have a nameplate engraved NORMAL. Transfer to normal pushbutton shall enable transfer when normal power is available.

o. Transfer to Alternate: A red indicating light shall supervise the alternate power source and shall have a nameplate engraved ALTERNATE. Transfer to alternate pushbutton shall enable transfer when alternate power source is available.

p. Enclosure: Manual transfer switch and accessories shall be in a wallmounted and ventilated NEMA ICS 6, Type 1, smooth sheet metal enclosure constructed in accordance with UL 1008. Gauge of the metal shall be not less than No. 14. Doors shall have suitable hinges, locking handle latch, and gasketed jambs. Enclosure shall be equipped with at least two approved size and type of grounding lugs for the purpose of grounding the enclosure using No. 4 AWG copper conductors to the facility ground system. Factory wiring within the enclosure shall comply with NFPA 70. If wiring is not color coded, wire shall be permanently tagged near the terminal at each end with the wire number shown on approved detail drawings. Terminal blocks shall conform to NEMA ICS 4. Terminal facilities shall be suitably arranged for entrance of external conductors from the bottom of the enclosure or from the top and bottom, as shown. Main switch terminals, including the neutral terminal, shall be of the pressure type and suitable for the termination of the external copper conductors shown.

q. Construction: Enclosure shall be constructed for convenient removal and replacement of contacts, coils, springs and control devices from the front without the disconnection of external power conductors or the removal or disassembly of major components. Enclosure housing on manual transfer switch shall be constructed to protect personnel from energized components during maintenance of the manual transfer switch.

r. Finishing: Painting required for surfaces not otherwise specified and finish painting of items only primed at the factory shall be as specified in Section 09900 PAINTING, GENERAL.

3 EXECUTION

3.1 GROUNDING

Grounding shall be in conformance with NFPA 70, the contract drawings, and the following specifications.

3.1.1 Ground Rods

The resistance to ground shall be measured using the fall-of-potential method described in IEEE Std 81. The ground grid shall incorporate multiple ground rods as indicated on the contract drawings. The maximum resistance of a driven ground shall not exceed 5 ohms under normally dry conditions. If the resultant resistance exceeds 5 ohms measured not less than 48 hours after rainfall, the Contracting Officer shall be notified immediately. Connections below grade shall be fusion welded. Connections above grade shall be fusion welded or shall use UL 467 approved connectors.

3.1.2 Ground Bus

Ground bus shall be provided in the electrical equipment rooms as indicated. Noncurrent-carrying metal parts of transformer neutrals and other electrical equipment shall be effectively grounded by bonding to the ground bus. The ground bus shall be bonded to both the entrance ground, and to a ground rod or rods as specified above having the upper ends terminating approximately 4 inches above the floor. Connections and splices shall be of the brazed,

welded, bolted, or pressure-connector type, except that pressure connectors or bolted connections shall be used for connections to removable equipment. Connections shall be bolted type in lieu of thermoweld, so they can be changed as required by additions and/or alterations.

3.1.3 Grounding Conductors

A green equipment grounding conductor, sized in accordance with NFPA 70 shall be provided, regardless of the type of conduit. Equipment grounding bars shall be provided in all panelboards. The equipment grounding conductor shall be carried back to the service entrance grounding connection or separately derived grounding connection. All equipment grounding conductors, including metallic raceway systems used as such, shall be bonded or joined together in each wiring box or equipment enclosure. Metallic raceways and grounding conductors shall be checked to assure that they are wired or bonded into a common junction. Metallic boxes and enclosures, if used, shall also be bonded to these grounding conductors by an approved means per NFPA 70. When boxes for receptacles, switches, or other utilization devices are installed, any designated grounding terminal on these devices shall also be bonded to the equipment grounding conductor junction with a short jumper.

3.2 WIRING METHODS

Wiring shall conform to NFPA 70, the contract drawings, and the following specifications. Unless otherwise indicated, wiring shall consist of insulated conductors installed in rigid zinc-coated steel, rigid plastic, electrical metallic tubing or intermediate metal conduit. Wire fill in conduits shall be based on NFPA 70 for the type of conduit and wire insulations specified. Wire fill in conduits located in Class I or II hazardous areas shall be limited to 25 percent of the cross sectional area of the conduit.

3.2.1 Conduit Systems

Conduit systems shall be installed as indicated. Conduit sizes shown are based on use of copper conductors with insulation types as described in paragraph WIRING METHODS. Minimum size of raceways shall be 1/2 inch.Only metal conduits will be permitted when conduits are required for shielding or other special purposes indicated, or when required by conformance to NFPA 70. Nonmetallic conduit may be used in damp, wet or corrosive locations when permitted by NFPA 70 and the conduit system is provided with appropriate boxes, covers, clamps, screws or other appropriate type of fittings. Electrical metallic tubing (EMT) may be installed only within buildings. EMT may be installed in concrete and grout in dry locations. EMT installed in concrete or grout shall be provided with concrete tight fittings. EMT shall not be installed in damp or wet locations, or the air space of exterior masonry cavity walls. Bushings, manufactured fittings or boxes providing equivalent means of protection shall be installed on the ends of all conduits and shall be of the insulating type, where required by NFPA 70. Only UL listed adapters shall be used to connect EMT to rigid metal conduit, cast boxes, and conduit bodies. Aluminum conduit may be used only where installed exposed in dry locations. Nonaluminum sleeves shall be used where aluminum conduit passes through concrete floors and firewalls. Penetrations of above grade floor slabs, time-rated partitions and fire walls shall be firestopped in accordance with Section 07270FIRESTOPPING. Except as otherwise specified, IMC may be used as an option for rigid steel

conduit in areas as permitted by NFPA 70. Raceways shall not be installed under the firepits of boilers and furnaces and shall be kept 6 inches away from parallel runs of flues, steam pipes and hot-water pipes. Raceways shall be concealed within finished walls, ceilings, and floors unless otherwise shown. Raceways crossing structural expansion joints or seismic joints shall be provided with suitable expansion fittings or other suitable means to compensate for the building expansion and contraction and to provide for continuity of grounding. Wiring installed in underfloor raceway system shall be suitable for installation in wet locations.

3.2.1.1 Pull Wires

A pull wire shall be inserted in each empty raceway in which wiring is to be installed if the raceway is more than 50 feet in length and contains more than the equivalent of two 90-degree bends, or where the raceway is more than 150 feet in length. The pull wire shall be of No. 14 AWG zinc-coated steel, or of plastic having not less than 200 pounds per square inch tensile strength. Not less than 10 inches of slack shall be left at each end of the pull wire.

3.2.1.2 Conduit Stub-Ups

Where conduits are to be stubbed up through concrete floors, a short elbow shall be installed below grade to transition form the horizontal run of conduit to a vertical run. Install a conduit coupling fitting, threaded on the inside, to allow terminating the conduit flush with the finished floor. Wiring shall be extended in rigid threaded conduit to equipment, except that where required, flexible conduit may be used 6 inches above the floor. Plug empty or spare conduit stub-ups flush with the finished floor with a threaded, recessed plug.

3.2.1.3 Below Slab-on-Grade or in the Ground

Electrical wiring below slab-on-grade shall be protected by a conduit system. Conduit passing vertically through slabs-on-grade shall be rigid steel or IMC. Rigid steel or IMC conduits installed below slab-on-grade or in the earth shall be field wrapped with 0.010 inch thick pipe-wrapping plastic tape applied with a 50 percent overlay, or shall have a factory-applied polyvinyl chloride, plastic resin, or epoxy coating system.

3.2.1.4 Installing in Slabs Including Slabs on Grade

Conduit installed in slabs-on-grade shall be rigid steel or IMC. Conduits shall be installed as close to the middle of concrete slabs as practicable without disturbing the reinforcement. Outside diameter shall not exceed 1/3 of the slab thickness and conduits shall be spaced not closer than 3 diameters on centers except at cabinet locations where the slab thickness shall be increased as approved by the Contracting Officer. Where conduit is run parallel to reinforcing steel, the conduit shall be spaced a minimum of one conduit diameter away but not less than one inchfrom the reinforcing steel.

3.2.1.5 Changes in Direction of Runs

Changes in direction of runs shall be made with symmetrical bends or cast-metal fittings. Field-made bends and offsets shall be made with an approved hickey or conduit-bending machine. Crushed or deformed raceways shall not

be installed. Trapped raceways in damp and wet locations shall be avoided where possible. Care shall be taken to prevent the lodgment of plaster, dirt, or trash in raceways, boxes, fittings and equipment during the course of construction. Clogged raceways shall be entirely freed of obstructions or shall be replaced.

3.2.1.6 Supports

Except where otherwise permitted by NFPA 70, conduits shall be securely and rigidly fastened in place at intervals of not more than 10 feet and within 3 feet of boxes, cabinets, and fittings, with approved pipe straps, wall brackets, conduit clamps, conduit hangers, threaded C-clamps, beam clamps, or ceiling trapeze. Loads and supports shall be coordinated with supporting structure to prevent damage or deformation to the structure. Loads shall not be applied to joist bridging. Attachment shall be by wood screws or screw-type nails to wood; by toggle bolts on hollow masonry units; by expansion bolts on concrete or brick; by machine screws, welded threaded studs, heat-treated or spring-steel-tension clamps on steel work. Nail-type nylon anchors or threaded studs driven in by a powder charge and provided with lock washers and nuts may be used in lieu of expansion bolts or machine screws. Raceways or pipe straps shall not be welded to steel structures. Avoid cutting the main reinforcing bars in reinforced concrete beams or joists when drilling holes for support anchors. Holes drilled for support anchors, but not used, shall be filled. In partitions of light steel construction, sheet-metal screws may be used. Raceways shall not be supported using wire or nylon ties. Raceways shall be independently supported from the structure. Upper raceways shall not be used as a means of support for lower raceways. Supporting means will not be shared between electrical raceways and mechanical piping or ducts. Cables and raceways shall not be supported by ceiling grids. Except where permitted by NFPA 70, wiring shall not be supported by ceiling support systems. Conduits shall be fastened to sheet-metal boxes and cabinets with two locknuts where required by the NFPA 70, where insulating bushings are used, and where bushings cannot be brought into firm contact with the box; otherwise, a single locknut and bushing may be used. Threadless fittings for electrical metallic tubing shall be of a type approved for the conditions encountered. Additional support for horizontal runs is not required when EMT rests on steel stud cutouts.

3.2.1.7 Exposed Raceways

Exposed raceways shall be installed parallel or perpendicular to walls, structural members, or intersections of vertical planes and ceilings. Raceways above accessible ceilings shall be considered as exposed installations in accordance with NFPA 70definitions.

3.2.1.8 Exposed Risers

Exposed risers in wire shafts of multistory buildings shall be supported by U-clamp hangers at each floor level, and at intervals not to exceed 10 feet.

3.2.1.9 Communications Raceways

Communications raceways indicated shall be installed in accordance with the previous requirement for conduit and with the additional requirement that no length of run shall exceed 50 feet for 3/4 inch sizes, and 100 feet for and shall not contain more than two 90 degree bends or the equivalent.

Additional pull or junction boxes shall be installed to comply with these limitations whether indicated or not. Inside radii of bends in conduits of 1 inch size or larger shall be not less than ten times the nominal diameter.

3.2.2 Cable Trays

Cable trays shall be supported in accordance with the recommendations of the manufacturer but at no more than 6 foot intervals. Contact surfaces of aluminum connections shall be coated with an antioxidant compound prior to assembly. Adjacent cable tray sections shall be bonded together by connector plates of an identical type as the cable tray sections. The Contractor shall submit the manufacturer's certification that the cable tray system meets all requirements of Article 318 of NFPA 70. The cable tray shall be installed and grounded in accordance with the provisions of Article 318 of NFPA 70. Data submitted by the Contractor shall demonstrate that the completed cable tray systems will comply with the specified requirements. Cable trays shall terminate 10 inches from both sides of smoke and fire partitions. Conductors run through smoke and fire partitions shall be installed in 4 inch rigid steel conduits with grounding bushings, extending 12 inches beyond each side of the partitions. The installation shall be sealed to preserve the smoke and fire rating of the partitions. Penetrations shall be firestopped in accordance with Section 07270 FIRESTOPPING.

3.2.3 Cables and Conductors

Installation shall conform to the requirements of NFPA 70. Covered, bare or insulated conductors of circuits rated over 600 volts shall not occupy the same equipment wiring enclosure, cable, or raceway with conductors of circuits rated 600 volts or less.

3.2.3.1 Sizing

Unless otherwise noted, all sizes are based on copper conductors and the insulation types indicated. Sizes shall be not less than indicated. Branch-circuit conductors shall be not smaller than No. 12 AWG. Conductors for branch circuits of 120 volts more than 100 feet long and of 277 volts more than 230 feet long, from panel to load center, shall be no smaller than No. 10 AWG. Class 1 remote control and signal circuit conductors shall be not less than No. 14 AWG. Class 2 remote control and signal circuit conductors shall be not less than No. 16 AWG.

3.2.3.2 Use of Aluminum Conductors in Lieu of Copper

Aluminum conductors shall not be used.

3.2.3.3 Cable Splicing

Splices shall be made in an accessible location. Crimping tools and dies shall be approved by the connector manufacturer for use with the type of connector and conductor.

a. Copper Conductors, 600 Volt and Under: Splices in conductors No. 10 AWG and smaller diameter shall be made with an insulated, pressure-type connector. Splices in conductors No. 8 AWG and larger diameter shall be made with a solderless connector and

insulated with tape or heat-shrink type insulating material equivalent to the conductor insulation.

3.2.3.4 Conductor Identification and Tagging

Power, control, and signal circuit conductor identification shall be provided within each enclosure where a tap, splice, or termination is made. Where several feeders pass through a common pull box, the feeders shall be tagged to indicate clearly the electrical characteristics, circuit number, and panel designation. Phase conductors of low voltage power circuits shall be identified by color coding. Phase identification by a particular color shall be maintained continuously for the length of a circuit, including junctions.

a. Color coding shall be provided for service, feeder, branch, and ground conductors. Color shall be green for grounding conductors and white for neutrals; except where neutrals of more than one system are installed in the same raceway or box, other neutral shall be white with colored (not green) stripe. The color coding for three-phase and single-phase low voltage systems shall be as follows:

120/208-volt, 3-phase: Black(A), red(B), and blue(C).
277/480-volt, 3-phase: Brown(A), orange(B), and yellow(C).

b. Conductor phase and voltage identification shall be made by color-coded insulation for all conductors smaller than No. 6 AWG. For conductors No. 6 AWG and larger, identification shall be made by color-coded insulation, or conductors with black insulation may be furnished and identified by the use of half-lapped bands of colored electrical tape wrapped around the insulation for a minimum of 3 inches of length near the end, or other method as submitted by the Contractor and approved by the Contracting Officer.

c. Control and signal circuit conductor identification shall be made by color-coded insulated conductors, plastic-coated self-sticking printed markers, permanently attached stamped metal foil markers, or equivalent means as approved. Control circuit terminals of equipment shall be properly identified. Terminal and conductor identification shall match that shown on approved detail drawings. Hand lettering or marking is not acceptable.

3.3 BOXES AND SUPPORTS

Boxes shall be provided in the wiring or raceway systems wherever required NFPA 70 for pulling of wires, making connections, and mounting of devices or fixtures. Pull boxes shall be furnished with screw-fastened covers. Indicated elevations are approximate, except where minimum mounting heights for hazardous areas are required by NFPA 70. Unless otherwise indicated, boxes for wall switches shall be mounted 48 inches above finished floors. Switch and outlet boxes located on opposite sides of fire rated walls shall be separated by a minimum horizontal distance of 24 inches. The total combined area of all box openings in fire rated walls shall not exceed 100 square inches per 100 square feet. Maximum box areas for individual boxes in fire rated walls vary with the manufacturer and must not exceed the maximum specified for that box in UL-03. Only boxes listed in UL-03 shall be used in fire rated walls.

3.3.1 Box Applications

Each box shall have not less than the volume required by NFPA 70 for number of conductors enclosed in box. Boxes for metallic raceways, 4 by 4 inch nominal size and smaller, shall be of the cast-metal hub type when located in normally wet locations, when flush and surface mounted on outside of exterior surfaces, or when located in hazardous areas. Cast-metal boxes installed in wet locations and boxes installed flush with the outside of exterior surfaces shall be gasketed. Boxes for mounting lighting fixtures shall be not less than 4 inches square, or octagonal, except smaller boxes may be installed as required by fixture configuration, as approved. Cast-metal boxes with 3/32 inch wall thickness are acceptable. Large size boxes shall be NEMA 1 or as shown. Boxes in other locations shall be sheet steel except that aluminum boxes may be used with aluminum conduit. Boxes for use in masonry-block or tile walls shall be square-cornered, tile-type, or standard boxes having square-cornered, tile-type covers.

3.3.2 Brackets and Fasteners

Boxes and supports shall be fastened to wood with wood screws or screw-type nails of equal holding strength, with bolts and metal expansion shields on concrete or brick, with toggle bolts on hollow masonry units, and with machine screw or welded studs on steel work. Threaded studs driven in by powder charge and provided with lockwashers and nuts, or nail-type nylon anchors may be used in lieu of expansion shields, or machine screws. Avoid cutting the main reinforcing bars in reinforced concrete beams or joists when drilling holes for support anchors. The use of brackets which depend on gypsum wallboard or plasterboard for primary support will not be permitted. In partitions of light steel construction bar hangers with 1 inch long studs, mounted between metal wall studs or metal box mounting brackets shall be used to secure boxes to the building structure. When metal box mounting brackets are used, additional box support shall be provided on the side of the box opposite the brackets. This additional box support shall consist of a minimum 12 inch long section of wall stud, bracketed to the opposite side of the box and secured by two screws through the wallboard on each side of the stud. Metal screws may be used in lieu of the metal box mounting brackets.

3.3.3 Mounting in Walls, Ceilings, or Recessed Locations

In walls or ceilings of concrete, tile, or other non-combustible material, boxes shall be installed so that the edge of the box is not recessed more than 1/4 inch from the finished surface. Boxes mounted in combustible walls or ceiling material shall be mounted flush with the finished surface. The use of gypsum or plasterboard as a means of supporting boxes shall not be permitted. Boxes installed for concealed wiring shall be provided with suitable extension rings or plaster covers, as required. The bottom of boxes installed in masonry-block walls for concealed wiring shall be mounted flush with the top of a block to minimize cutting of the blocks, and boxes shall be located horizontally to avoid cutting webs of block. Separate boxes shall be provided for flush or recessed fixtures when required by the fixture terminal operating temperature, and fixtures shall be readily removable for access to the boxes unless ceiling access panels are provided.

3.3.4 Installation in Overhead Spaces

In open overhead spaces, cast-metal boxes threaded to raceways need not be separately supported except where used for fixture support; cast-metal boxes having threadless connectors and sheet metal boxes shall be supported directly from the building structure or by bar hangers. Hangers shall not be fastened to or supported from joist bridging. Where bar hangers are used, the bar shall be attached to raceways on opposite sides of the box and the raceway shall be supported with an approved type fastener not more than 24 inches from the box.

3.4 DEVICE PLATES

One-piece type device plates shall be provided for all outlets and fittings. Plates on unfinished walls and on fittings shall be of zinc-coated sheet steel, cast-metal, or impact resistant plastic having rounded or beveled edges. Plates on finished walls shall be of steel with baked enamel finish as indicated or impact-resistant plastic and shall be ivory satin finish corrosion resistant steel or satin finish chromium plated brass as indicated. Screws shall be of metal with countersunk heads, in a color to match the finish of the plate. Plates shall be installed with all four edges in continuous contact with finished wall surfaces without the use of mats or similar devices. Plaster fillings will not be permitted. Plates shall be installed with an alignment tolerance of 1/16 inch. The use of sectional-type device plates will not be permitted. Plates installed in wet locations shall be gasketed and provided with a hinged, gasketed cover, unless otherwise specified.

3.5 RECEPTACLES

3.5.1 Single and Duplex, 15 or 20-ampere, 125 volt

Single and duplex receptacles shall be rated 20 amperes, 125 volts, two-pole, three-wire, grounding type with polarized parallel slots. Bodies shall be of ivory unless otherwise indicated to match color of switch handles in the same room or to harmonize with the color of the respective wall, and supported by mounting strap having plaster ears. Contact arrangement shall be such that contact is made on two sides of an inserted blade. Receptacle shall be side- or back-wired with two screws per terminal. The third grounding pole shall be connected to the metal mounting yoke. Receptacles with ground fault circuit interrupters shall have the current rating as indicated, and shall be UL Class A type unless otherwise shown. Ground fault circuit protection shall be provided as required by NFPA 70 and as indicated on the drawings.

3.5.2 Floor Outlets

Floor outlets shall be adjustable and each outlet shall consist of a cast-metal body with threaded openings for conduits, adjustable ring, and cover plate with 3/4 inch threaded flush plug. Each telephone outlet shall consist of a horizontal cast housing with a receptacle as specified. Gaskets shall be used where necessary to ensure a watertight installation. Plugs with installation instructions shall be delivered to the Contracting Officer at the job site for capping outlets upon removal of service fittings.

3.5.3 Weatherproof Applications

Weatherproof receptacles shall be suitable for the environment, damp or wet as applicable, and the housings shall be labeled to identify the allowable use. Receptacles shall be marked in accordance with UL 514A for the type of use indicated; "Damp locations", "Wet Locations", "Wet Location Only When Cover Closed". Assemblies shall be installed in accordance with the manufacturer's recommendations.

3.5.3.1 Damp Locations

Receptacles in damp locations shall be mounted in an outlet box with a gasketed, weatherproof, cast-metal cover plate (device plate, box cover) and a gasketed cap (hood, receptacle cover) over each receptacle opening. The cap shall be either a screw-on type permanently attached to the cover plate by a short length of bead chain or shall be a flap type attached to the cover with a spring loaded hinge.

3.5.3.2 Wet Locations

Receptacles in wet locations must be installed in an assembly rated for such use whether the plug is inserted or withdrawn, unless otherwise indicated. In a duplex installation, the receptacle cover shall be configured to shield the connections whether one or both receptacles are in use. Assemblies which utilize a self-sealing boot or gasket to maintain wet location rating shall be furnished with a compatible plug at each receptacle location and a sign notifying the user that only plugs intended for use with the sealing boot shall be connected during wet conditions.

3.5.4 Special-Purpose or Heavy-Duty Receptacles

Special-purpose or heavy-duty receptacles shall be of the type and of ratings and number of poles indicated or required for the anticipated purpose. Contact surfaces may be either round or rectangular. One appropriate straight or angle-type plug shall be furnished with each receptacle. Locking type receptacles, rated 30 amperes or less, shall be locked by rotating the plug. Locking type receptacles, rated more than 50 amperes, shall utilize a locking ring.

3.6 WALL SWITCHES

Wall switches shall be of the totally enclosed tumbler type. The wall switch handle and switch plate color shall be ivory unless otherwise indicated. Wiring terminals shall be of the screw type or of the solderless pressure type having suitable conductor-release arrangement. Not more than two switches shall be installed in a single-gang position. Switches shall be rated 20-ampere 277-volt for use on alternating current only. Pilot lights indicated shall consist of yoke-mounted candelabra-base sockets rated at 75 watts, 125 volts, and fitted with glass or plastic jewels. A clear 6-watt lamp shall be furnished and installed in each pilot switch. Jewels for use with switches controlling motors shall be green, and jewels for other purposes shall be red. Dimming switches shall be solid-state flush mounted, sized for the loads.

3.7 SERVICE EQUIPMENT

Service-disconnecting means shall be of the enclosed molded-case circuit breaker type in paragraph POWER SWITCHGEAR ASSEMBLIES INCLUDING SWITCHBOARDS with an external handle for manual operation. When service disconnecting means is a part of an assembly, the assembly shall be listed as suitable for service entrance equipment. Enclosures shall be sheet metal with hinged cover for surface mounting unless otherwise indicated.

3.8 PANELBOARDS

Circuit breakers and switches used as a motor disconnecting means shall be capable of being locked in the open position. Door locks shall be keyed alike. Nameplates shall be as approved. Directories shall be typed to indicate loads served by each circuit and mounted in a holder behind a clear protective covering.

3.8.1 Panelboards

Panelboards shall be circuit breaker equipped as indicated on the drawings. Unless noted otherwise, panels shall be surface mounted when located in electrical rooms and flush mounted when located in other finished spaces.

3.9 CENTRAL BATTERY EMERGENCY LIGHTING SYSTEM

Comply implicitly with manufacturer's installation instructions. Do not energize system until authorized by an authorized manufacturer's representative. Anchor system to structure.

3.10 POWER-SWITCHGEAR ASSEMBLIES INCLUDING SWITCHBOARDS

Assemblies shall be metal-enclosed, freestanding general-purpose ventilated type and shall be installed to provide front access. Busses shall be copper. Assembly shall be approximately 90 inches high; arrangement of circuit breakers and other items specified shall be as indicated. The withstand rating and interrupting capacity of the switchboards and circuit breakers shall be based on the maximum fault current available and as indicated. Install on concrete housekeeping pad.

3.10.1 Circuit Breakers

Circuit breakers shall be stationary molded-case circuit breakers. Circuit breakers rated 100 amps or less shall be fixed trip type. Circuit breakers rated above 100 amps shall be adjustable trip type.

3.11 FUSES

Equipment provided under this contract shall be provided with a complete set of properly rated fuses when the equipment manufacturer utilize fuses in the manufacture of the equipment, or if current-limiting fuses are required to be installed to limit the ampere-interrupting capacity of circuit breakers or equipment to less than the maximum available fault current at the location of the equipment to be installed. Fuses shall have a voltage rating of not less than the phase-to-phase circuit voltage, and shall have the time-current characteristics required for effective power system coordination.

3.11.1 Cartridge Fuses; Current-Limiting Type

Cartridge fuses, current-limiting type, Class R shall have tested interrupting capacity not less than 100,000 amperes. Fuse holders shall be the type that will reject all Class H fuses.

3.12 UNDERGROUND SERVICE

Unless otherwise indicated, interior conduit systems shall be stubbed out 5 feet beyond the building wall and 3 feet below finished grade, for interface with the exterior service lateral conduits and exterior communications conduits. Outside conduit ends shall be capped or plugged until connected to exterior conduit systems. Underground service lateral conductors will be extended to building service entrance and terminated in accordance with the requirements of Section 16375 ELECTRICAL DISTRIBUTION SYSTEM, UNDERGROUND and NFPA 70.

3.13 MOTOR CONTROL

Each motor or group of motors requiring a single control shall be provided under other sections of these specifications with a suitable controller and devices that will perform the functions as specified for the respective motors. Each motor of 1/8 hp or larger shall be provided with thermal-overload protection. Polyphase motors shall have overload protection in each ungrounded conductor. The overload-protection device shall be provided either integral with the motor or controller, or shall be mounted in a separate enclosure. Unless otherwise specified, the protective device shall be of the manually reset type. Single or double pole tumbler switches specifically designed for alternating-current operation only may be used as manual controllers for single-phase motors having a current rating not in excess of 80 percent of the switch rating. Automatic control devices such as thermostats, float or pressure switches may control the starting and stopping of motors directly, provided the devices used are designed for that purpose and have an adequate horsepower rating. When the automatic-control device does not have such a rating, a magnetic starter shall be used, with the automatic-control device actuating the pilot-control circuit. When combination manual and automatic control is specified and the automatic-control device operates the motor directly, a double-throw, three-position tumbler or rotary switch shall be provided for the manual control; when the automatic-control device actuates the pilot control circuit of a magnetic starter, the latter shall be provided with a three-position selector switch marked MANUAL-OFF-AUTOMATIC. Connections to the selector switch shall be such that only the normal automatic regulatory control devices will be bypassed when the switch is in the Manual position; all safety control devices, such as low- or high-pressure cutouts, high-temperature cutouts, and motor-overload protective devices, shall be connected in the motor-control circuit in both the Manual and the Automatic positions of the selector switch. Control circuit connections to any MANUAL-OFF-AUTOMATIC switch or to more than one automatic regulatory control device shall be made in accordance with wiring diagram approved by the Contracting Officer unless such diagram is included on the drawings. All controls shall be 120 volts or less unless otherwise indicated.

3.13.1 Contacts

Unless otherwise indicated, contacts in miscellaneous control devices such as float switches, pressure switches, and auxiliary relays shall have

current and voltage ratings in accordance with NEMA ICS 2 for rating designation B300.

3.13.2 Safety Controls

Safety controls for boilers shall be connected to a 2-wire, 120 volt grounded circuit supplied from the associated boiler-equipment circuit. Where the boiler circuit is more than 120 volts to ground, safety controls shall be energized through a two-winding transformer having its 120 volt secondary winding grounded. Overcurrent protection shall be provided in the ungrounded secondary conductor and shall be sized for the load encountered.

3.14 MOTOR-DISCONNECT MEANS

Each motor shall be provided with a disconnecting means when required by NFPA 70 even though not indicated. For single-phase motors, a single or double pole toggle switch, rated only for alternating current, will be acceptable for capacities less than 30 amperes, provided the ampere rating of the switch is at least 125 percent of the motor rating. Switches shall disconnect all ungrounded conductors.

3.15 TRANSFORMER INSTALLATION

Three-phase transformers shall be connected only in a delta-wye or wye-delta configuration as indicated. "T" connections may be used for transformers rated at 15 kVA or below. Dry-type transformers shown located within 5 feet of the exterior wall shall be provided in a weatherproof enclosure. Transformers to be located within the building may be provided in the manufacturer's standard, ventilated indoor enclosure designed for use in 40 degrees C ambient temperature, unless otherwise indicated.

3.16 LAMPS AND LIGHTING FIXTURES

Ballasted fixtures shall have ballasts which are compatible with the specific type and rating of lamps indicated and shall comply with the applicable provisions of the publications referenced.

3.16.1 Lamps

Lamps of the type, wattage, and voltage rating indicated shall be delivered to the project in the original cartons and installed in the fixtures just prior to the completion of the project.

3.16.1.1 Fluorescent

Lamps shall be of the rapid-start type unless otherwise shown or approved. Fluorescent lamps for electronic ballasts shall be as indicated.

3.16.2 Fixtures

Fixtures shall be as shown and shall conform to the following specifications and shall be as detailed on the contract drawings, which accompany and form a part of this specification for the types indicated. Illustrations shown are indicative of the general type desired and are not intended to restrict selection to fixtures of any particular manufacturer. Fixtures of similar designs and equivalent energy efficiency, light distribution and brightness

characteristics, and of equal finish and quality will be acceptable if approved.

3.16.2.1 Accessories

Accessories such as straps, mounting plates, nipples, or brackets shall be provided for proper installation. Open type fluorescent fixtures with exposed lamps shall have a wire-basket type guard.

3.16.2.2 Suspended Fixtures

Suspended fixtures shall be provided with swivel hangers in order to ensure a plumb installation. Pendants, rods, or chains 4 feet or longer excluding fixture, shall be braced to limit swinging. Bracing shall be 3 directional, 120 degrees apart. Single unit suspended fluorescent fixtures shall have twin-stem hangers. Multiple unit or continuous-row fluorescent units shall have a tubing or stem for wiring at one point, and a tubing or rod suspension provided for each length of chassis including one at each end. Maximum distance between adjacent tubing or stems shall be 10 feet. Rods shall be of not less than 3/16 inch diameter. Flexible raceway shall be installed to each fixture from an overhead junction box. Fixture to fixture wiring installation is allowed only when fixtures are installed end to end in a continuous run.

3.16.2.3 Ceiling Fixtures

Ceiling fixtures shall be coordinated with and suitable for installation in, on, or from the suspended ceiling provided under other sections of these specifications. Installation and support of fixtures shall be in accordance with the NFPA 70 and manufacturer's recommendations. Recessed fixtures shall have adjustable fittings to permit alignment with ceiling panels. Recessed fixtures installed in fire-resistive type of suspended ceiling construction shall have the same fire rating as the ceiling or shall be provided with fireproofing boxes having materials of the same fire rating as the ceiling panels, in conformance with UL-03. Surface-mounted fixtures shall be suitable for fastening to the structural support for ceiling panels.

3.16.2.4 Sockets

Sockets of industrial, strip, and other open type fluorescent fixtures shall be of the type requiring a forced movement along the longitudinal axis of the lamp for insertion and removal of the lamp.

3.16.2.5 Preset Dimming System

System shall be installed in accordance with manufacturer's instructions. Cabling shall be installed in conduit.

3.17 BATTERY CHARGERS

Battery chargers shall be installed in conformance with NFPA 70.

3.18 EQUIPMENT CONNECTIONS

All wiring not furnished and installed under other sections of the specifications for the connection of electrical equipment as indicated on

the drawings shall be furnished and installed under this section of the specifications. Connections shall comply with the applicable requirements of paragraph WIRING METHODS. Flexible conduits 6 feet or less in length shall be provided to all electrical equipment subject to periodic removal, vibration, or movement and for all motors. All motors shall be provided with separate grounding conductors. Liquid-tight conduits shall be used in damp or wet locations.

3.18.1 Motor Control

Motor controls shall be installed in accordance with NFPA 70, the manufacturer's recommendations, and as indicated. Wiring shall be extended to motors and motor controls, and terminated.

3.18.2 Installation of Government-Furnished Equipment

Wiring shall be extended to the equipment and terminated.

3.18.3 Food Service Equipment Provided Under Other Sections

Wiring shall be extended to the equipment and terminated.

3.19 CIRCUIT PROTECTIVE DEVICES

The Contractor shall calibrate, adjust, set and test each new adjustable circuit protective device to ensure that they will function properly prior to the initial energization of the new power system under actual operating conditions.

3.20 PAINTING AND FINISHING

Field-applied paint on exposed surfaces shall be provided under Section 09900 PAINTING, GENERAL.

3.21 REPAIR OF EXISTING WORK

The work shall be carefully laid out in advance, and where cutting, channeling, chasing, or drilling of floors, walls, partitions, ceiling, or other surfaces is necessary for the proper installation, support, or anchorage of the conduit, raceways, or other electrical work, this work shall be carefully done, and any damage to building, piping, or equipment shall be repaired by skilled mechanics of the trades involved at no additional cost to the Government.

3.22 FIELD TESTING

Field testing shall be performed in the presence of the Contracting Officer. The Contractor shall notify the Contracting Officer 10 days prior to conducting tests. The Contractor shall furnish all materials, labor, and equipment necessary to conduct field tests. the contractor shall perform all tests and inspection recommended by the manufacturer unless specifically waived by the Contracting Officer. The Contractor shall maintain a written record of all tests which includes date, test performed, personnel involved, devices tested, serial number and name of test equipment, and test results. All field test reports will be signed and dated by the Contractor.

3.22.1 Safety

The Contractor shall provide and use safety devices such as rubber gloves, protective barriers, and danger signs to protect and warn personnel in the test vicinity. The Contractor shall replace any devices or equipment which are damaged due to improper test procedures or handling.

3.22.2 Ground-Resistance Tests

The resistance of each grounding electrode system and the grounding grid shall be measured using the fall-of-potential method defined in IEEE Std 81. Soil resistivity in the area of the grid shall be measured concurrently with the grid measurements. Ground resistance measurements shall be made before the electrical distribution system is energized and shall be made in normally dry conditions not less than 48 hours after the last rainfall. Resistance measurements of separate grounding electrode systems shall be made before the systems are bonded together below grade. The combined resistance of separate systems may be used to meet the required resistance, but the specified number of electrodes must still be provided.

a. Single rod electrode - 25 ohms.

b. Grid electrode - 5 ohms.

3.22.3 Ground-Grid Connection Inspection

All below-grade ground-grid connections will be visually inspected by the Contracting Officer before backfilling. The Contractor shall notify the Contracting Officer 48 hours before the site is ready for inspection.

3.22.4 Cable Tests

The Contractor is responsible for identifying all equipment and devices that could be damaged by application of the test voltage and ensuring that they have been properly disconnected prior to performing insulation resistance testing. An insulation resistance test shall be performed on all low voltage cables after the cables are installed in their final configuration and prior to energization. The test voltage shall be 500 volts DC applied for one minute between each conductor and ground and between all possible combinations of conductors. The minimum value of resistance shall be:

R in megohms = (rated voltage in kV + 1) x 1000/(length of cable in feet)

Each cable failing this test shall be repaired or replaced. The repaired cable system shall then be retested until failures have been eliminated.

3.22.4.1 Low Voltage Cable Tests

a. Continuity test.

b. Insulation resistance test.

3.22.5 Motor Tests

a. Phase rotation test to ensure proper directions.

b. High potential test on each winding to ground.

c. Insulation resistance of each winding to ground.

d. Vibration test.

e. Dielectric absorption test on motor and starter.

3.22.6 Dry-Type Transformer Tests

The following field tests shall be performed on all dry-type transformers 15 kVA and above.

a. Insulation resistance test phase-to-ground, each phase.

b. Turns ratio test.

3.22.7 Central Battery Emergency Lighting System

The following test shall be conducted by an authorized manufacturer's representative to ensure the equipment is operating properly:

a. Load test.

b. Simulation of power failure.

c. Transmission of trouble alarm.

3.22.8 Circuit Breaker Tests

The following field tests shall be performed on circuit breakers.

3.22.8.1 Circuit Breakers, Molded Case

a. Insulation resistance test phase-to-phase, all combinations.

b. Insulation resistance test phase-to-ground, each phase.

c. Closed breaker contact resistance test.

d. Manual operation of the breaker.

3.23 OPERATING TESTS

After the installation is completed, and at such time as the Contracting Officer may direct, the Contractor shall conduct operating tests for approval. The equipment shall be demonstrated to operate in accordance with the specified requirements. An operating test report shall be submitted in accordance with paragraph FIELD TEST REPORTS.

3.24 ACCEPTANCE

Final acceptance of the facility will not be given until the Contractor has successfully completed all tests and after all defects in installation, material or operation have been corrected.

END OF SECTION

SECTION 16528

EXTERIOR LIGHTING

1 GENERAL

1.1 REFERENCES

The publications listed below form a part of this specification to the extent referenced. The publications are referred to in the text by basic designation only.

AMERICAN ASSOCIATION OF STATE HIGHWAY AND TRANSPORTATION OFFICIALS (AASHTO)

AASHTO LTS-2	(1985; Rev 1986, 1987, 1988) Standard Specifications for Structural Supports for Highway Signs, Luminaires and Traffic Signals

AMERICAN NATIONAL STANDARDS INSTITUTE (ANSI)

ANSI C2	(1993) National Electrical Safety Code
ANSI C78.1	(1991; C78.1a) Fluorescent Lamps - Rapid-Start Types - Dimensional and Electrical Characteristics
ANSI C78.40	(1992) Mercury Lamps
ANSI C78.1350	(1990) 400-Watt, 100-Volt, S51 Single-Ended High-Pressure Sodium Lamps
ANSI C78.1351	(1989) 250-Watt, 100-Volt S50 Single-Ended High-Pressure Sodium Lamps
ANSI C78.1352	(1990) 1000-Watt, 250-Volt, S52 Single-Ended High-Pressure Sodium Lamps
ANSI C78.1355	(1989) 150-Watt, 55-Volt S55 High-Pressure Sodium Lamps
ANSI C78.1375	(1990) 400-Watt, M59 Single-Ended Metal-Halide Lamps
ANSI C78.1376	(1990) 1000-Watt, M47 Single-Ended Metal-Halide Lamps
ANSI C80.1	(1990) Rigid Steel Conduit - Zinc Coated
ANSI C82.4	(1992) Ballasts for High-Intensity-Discharge and Low-Pressure Sodium Lamps (Multiple-Supply Type)
ANSI C119.1	(1986) Sealed Insulated Underground Connector Systems Rated 600 Volts

ANSI C135.1	(1979) Galvanized Steel Bolts and Nuts for Overhead Line Construction
ANSI C135.14	(1979) Staples with Rolled or Slash Points for Overhead Line Construction
ANSI C135.30	(1988) Zinc-Coated Ferrous Ground Rods for Overhead or Underground Line Construction
ANSI C136.2	(1985) Luminaires Voltage Classification
ANSI C136.3	(1989) Luminaire Attachments - for Roadway Lighting Equipment
ANSI C136.6	(1990) Roadway Lighting Equipment - Metal Heads and Reflector Assemblies - Mechanical and Optical Interchangeability
ANSI C136.9	(1990) Roadway Lighting Equipment - Socket Support Assemblies for Metal Heads - Mechanical Interchangeability
ANSI C136.10	(1988) Locking-type Photocontrol Devices and Mating Receptacles - Physical and Electrical Interchangeability and Testing for Roadway Lighting Equipment
ANSI C136.11	(1988) Multiple Sockets for Roadway Lighting Equipment
ANSI C136.13	(1992) Metal Brackets for Wood Poles
ANSI C136.15	(1986) High-Intensity-Discharge and Low-Pressure Sodium Lamps in Luminaires - Field Identification
ANSI C136.20	(1990) Roadway Lighting Equipment - Fiber Reinforced Lighting Poles (FRP)
ANSI O5.1	(1992) Specifications and Dimensions for Wood Poles

AMERICAN SOCIETY FOR TESTING AND MATERIALS (ASTM)

ASTM A 36	(1994a) Carbon Structural Steel
ASTM A 48	(1994a) Gray Iron Castings
ASTM A 123	(1989a) Zinc (Hot-Dip Galvanized) Coatings on Iron and Steel Products
ASTM A 153	(1982; R 1987) Zinc Coating (Hot-Dip) on Iron and Steel Hardware
ASTM A 575	(1989) Steel Bars, Carbon, Merchant Quality, M-Grades

ASTM A 576	(1990b) Steel Bars, Carbon, Hot-Wrought, Special Quality
ASTM B 2	(1988) Medium-Hard-Drawn Copper Wire
ASTM B 8	(1993) Concentric-Lay-Stranded Copper Conductors, Hard, Medium-Hard, or Soft
ASTM B 117	(1994) Operating Salt Spray (Fog) Testing Apparatus
ASTM C 478	(1993) Precast Reinforced Concrete Manhole Sections
ASTM D 1654	(1992) Evaluation of Painted or Coated Specimens Subjected to Corrosive Environments

AMERICAN WOOD-PRESERVERS' ASSOCIATION (AWPA)

AWPA C4	(1993) Poles - Preservative Treatment by Pressure Processes
AWPA C25	(1992) Sawn Crossarms - Preservative Treatment by Pressure Processes
AWPA P1/P13	(1991) Standard for Coal Tar Creosote for Land and Fresh Water and Marine (Coastal Water) Use
AWPA P8	(1991) Standard for Oil-Borne Preservatives
AWPA P9	(1992) Standard for Solvents and Formulations for Organic Preservative Systems

COMMERCIAL ITEMS DESCRIPTIONS (CID)

CID A-A-341	(Rev. A) Pigment, Aluminum, Powder and Paste

ELECTRONIC INDUSTRIES ASSOCIATION (EIA)

EIA 232-E	(1991) Interface Between Data Terminal Equipment and Data Circuit-Terminating Equipment Employing Serial Binary Data Interchange

FEDERAL SPECIFICATIONS (FS)

FS TT-P-641	(Rev. G; Am. 1) Primer Coating, Zinc Dust-Zinc Oxide (For Galvanized Surfaces)
FS TT-V-81	(Rev. G) Varnish: Mixing, for Aluminum Paint

ILLUMINATING ENGINEERING SOCIETY OF NORTH AMERICA (IESNA)

IESNA ARP-8	(1983) Roadway Lighting

INSTITUTE OF ELECTRICAL AND ELECTRONICS ENGINEERS (IEEE)

IEEE C62.41	(1991) Surge Voltages in Low-Voltage AC Power Circuits
IEEE Std 81	(1983) Guide for Measuring Earth Resistivity, Ground Impedance, and Earth Surface Potentials of a Ground System

MILITARY SPECIFICATIONS (MS)

MS DOD-P-15328	(Rev D; Am 1; Int Am 2; Notice 1) Primer (Wash), Pretreatment (Formula No. 117 for Metals)

NATIONAL ELECTRICAL MANUFACTURERS ASSOCIATION (NEMA)

NEMA 250	(1991) Enclosures for Electrical Equipment (1000 Volts Maximum)
NEMA ICS 1	(1993) Industrial Controls and Systems
NEMA ICS 2	(1993) Industrial Control Devices, Controllers and Assemblies
NEMA ICS 6	(1993) Enclosures for Industrial Control and Systems
NEMA OS 1	(1989) Sheet-Steel Outlet Boxes, Device Boxes, Covers, and Box Supports
NEMA OS 2	(1986; Errata Aug 1986; R 1991) Nonmetallic Outlet Boxes, Device Boxes, Covers and Box Supports
NEMA RN 1	(1989) Polyvinyl-Chloride (PVC) Externally Coated Galvanized Rigid Steel Conduit and Intermediate Metal Conduit
NEMA TC 6	(1990) PVC and ABS Plastic Utilities Duct for Underground Installation
NEMA TC 9	(1990) Fittings for ABS and PVC Plastic Utilities Duct for Underground Installation

NATIONAL FIRE PROTECTION ASSOCIATION (NFPA)

NFPA 70	(1996) National Electrical Code

UNDERWRITERS LABORATORIES (UL)

UL 6	(1993) Rigid Metal Conduit
UL 44	(1991; Rev thru Jan 1995) Rubber-Insulated Wires and Cables

UL 98	(1994; Rev Feb 1995) Enclosed and Dead-Front Switches
UL 467	(1993) Grounding and Bonding Equipment
UL 486A	(1991; Rev Oct 1991) Wire Connectors and Soldering Lugs for Use with Copper Conductors
UL 486B	(1991; Rev thru Apr 1992) Wire Connections for Use with Aluminum Conductors
UL 506	(1994; Rev Jul 1994) Specialty Transformers
UL 514A	(1991) Metallic Outlet Boxes
UL 514B	(1992; Rev thru Apr 1995) Fittings for Conduit and Outlet Boxes
UL 514C	(1988; Rev Apr 1995) Nonmetallic Outlet Boxes, Flush-Device Boxes, and Covers
UL 651	(1989; Rev thru Dec 1989) Schedule 40 and 80 Rigid PVC Conduit
UL 651A	(1989; Rev thru Dec 1989) Type EB and A Rigid PVC Conduit and HDPE Conduit
UL 854	(1991; Rev thru Apr 1993) Service-Entrance Cables
UL 886	(1994; Rev thru Jul 1995) Outlet Boxes and Fittings for Use in Hazardous (Classified) Locations
UL 870	(1991) Wireways, Auxiliary Gutters, and Associated Fittings
UL 1029	(1994) High-Intensity-Discharge Lamp Ballasts
UL 1449	(1985; Errata Apr 1986) Transient Voltage Surge Suppressors
UL 1571	(1991; Rev thru Jul 1994) Incandescent Lighting Fixtures
UL 1572	(1991; Rev thru Jul 1994) High Intensity Discharge Lighting Fixtures

1.2 SYSTEM DESCRIPTION

1.2.1 Lighting System

The lighting system shall be configured as specified and shown. The system shall include all fixtures, hardware, poles, cables, connectors, adapters and appurtenances needed to provide a fully functional lighting system.

1.2.2 Electrical Requirements

The equipment shall operate from a voltage source as shown, plus or minus 10 percent, and 60 Hz, plus or minus 2 percent.

1.2.3 Standard Products

Materials and equipment shall be standard products of manufacturer regularly engaged in the manufacture of such products. Items of equipment shall essentially duplicate equipment that has been in satisfactory use at least 2 years prior to bid opening.

1.3 CORROSION PROTECTION

1.3.1 Aluminum Materials

Aluminum shall not be used.

1.3.2 Ferrous Metal Materials

1.3.2.1 Hardware

Ferrous metal hardware shall be hot-dip galvanized in accordance with ASTM A 153 and ASTM A 123.

1.3.2.2 Equipment

Equipment and component items, including but not limited to metal poles and ferrous metal luminaires not hot-dip galvanized or porcelain enamel finished, shall be provided with corrosion-resistant finishes which shall withstand 120 hours of exposure to the salt spray test specified in ASTM B 117 without loss of paint or release of adhesion of the paint primer coat to the metal surface in excess of 1/16 inch from the test mark. The scribed test mark and test evaluation shall have a rating of not less than 7 in accordance with TABLE 1, (procedure A) of ASTM D 1654. Cut edges or otherwise damaged surfaces of hot-dip galvanized sheet steel or mill galvanized sheet steel shall be coated with a zinc rich paint conforming to the manufacturer's standard.

1.3.3 Finishing

Painting required for surfaces not otherwise specified and finish painting of items only primed at the factory, shall be as specified in Section 09900 PAINTING, GENERAL.

1.4 SUBMITTALS

Government approval is required for submittals with a "GA" designation; submittals having an "FIO" designation are for information only. The following shall be submitted in accordance with section 01330 SUBMITTAL PROCEDURES:

SD-01 Data

Equipment and Materials; FIO.

Data published by the manufacturer of each item on the list of equipment and material, to permit verification that the item proposed is of the correct size, properly rated or applied, or is otherwise suitable for the application and fully conforms to the requirements specified.

Spare Parts; FIO.

Spare parts data for each item of material and equipment specified, after approval of detail drawings for materials and equipment, and not later than 4 months before the date of beneficial occupancy. The data shall include a complete list of parts, special tools, and supplies, with current unit prices and sources of supply.

SD-04 Drawings

Lighting System; GA.

Detail drawings for the complete system and for poles, lighting fixtures, bracket arms, cable boxes, handholes, and controllers. Drawings shall include design calculations showing adequate strength of screw foundations.

As-Built Drawings; FIO.

Final as-built drawings shall be finished drawings on mylar or vellum and shall be delivered with the final test report.

SD-09 Reports

Operating Test; GA.

Test procedures and reports for the Operating Test. After receipt by the Contractor of written approval of the test procedures, the Contractor shall schedule the tests. The final test procedures report shall be delivered after completion of the tests.

Ground Resistance Measurements; GA.

The measured resistance to ground of each separate grounding installation, indicating the location of the rods, the resistance of the soil in ohms per millimeter and the soil conditions at the time the measurements were made. The information shall be in writing.

SD-19 Operation and Maintenance Manuals

Lighting System; FIO.

A draft copy of the operation and maintenance manuals, prior to beginning the tests for use during site testing. Final copies of the manuals as specified bound in hardback, loose-leaf binders, within 30 days after completing the field test. The draft copy used during site testing shall be updated with any changes required, prior to final delivery of the manuals. Each manual's contents shall be identified on the cover. The manual shall include names, addresses, and telephone numbers of each subcontractor installing equipment and systems, and nearest service representatives for each item of equipment for each system. The manuals shall have a table of contents and tab sheets. Tab sheets shall be placed at the beginning of each chapter or section and at the beginning of each appendix. The final

copies delivered after completion of the field test shall include modifications made during installation checkout and acceptance.

2 PRODUCTS

2.1 STANDARD PRODUCT

Material and equipment shall be the standard product of a manufacturer regularly engaged in the manufacture of the product and shall essentially duplicate items that have been in satisfactory use for at least 2 years prior to bid opening. Items of the same classification shall be identical including equipment, assemblies, parts, and components.

2.2 BRACKET ARMS

2.2.1 On Steel Poles

Poles shall be provided with bracket arms of the support arm style and of the length indicated on drawings. Bracket arms shall conform to the design of the pole provided. The bracket arms shall be capable of supporting the equipment to be mounted on it with the maximum wind and ice loading encountered at the site. Strength of bracket arms shall be in accordance with ANSI C136.13. Steel brackets shall be galvanized.

2.2.2 Floodlight Brackets

Floodlight brackets shall be coordinated with the floodlight support provided.

2.3 CABLE

The Contractor shall provide all wire and cable not indicated as government furnished equipment. Wire and cable components shall be able to withstand the jobsite environment for a minimum of 20 years.

2.3.1 Insulated Cable

Cable shall be type USE conforming to UL 854, with copper conductors and type RHW or XHHW insulation conforming to UL 44, and shall include green ground conductor. Cable shall be rated 600 volts. Parts of the cable system such as splices and terminations shall be rated not less than 600 volts. The size and number of conductors and the number of cables shall be as indicated. Conductors larger than No. 8 AWG shall be stranded.

2.3.2 Bare Copper Conductors

Medium-hard-drawn copper conductors shall conform to ASTM B 2 and ASTM B 8.

2.4 CABLE SPLICES AND CONNECTORS

Cable splices and connectors shall conform to UL 486A. Underground splices and connectors shall also conform to the requirements of ANSI C119.1.

2.5 CABLE BOXES

Boxes and covers shall be made of cast iron with zinc coated or aluminized finish, and shall be of the sizes indicated on drawings. The minimum inside dimensions shall be not less than 12 inches square by 6 inches deep and not less than required to house the cable splice. A suitable gasket shall be installed between the box and cover for watertightness. A sufficient number of screws shall be installed to hold the cover in place along the entire surface of contact. Grounding lugs shall be provided.

2.6 HANDHOLES

Handholes and pullboxes shall be as indicated. Strength of handholes and pullboxes and their frames and covers shall conform to the requirements of ANSI C2. Precast concrete manholes shall have the required strength established by ASTM C 478. Handholes for low voltage cables installed in parking lots, sidewalks, and turfed areas shall be from an aggregate consisting of sand and with continuous woven glass strands having an overall compressive strength of at least 10,000 psi and a flexural strength of at least 5,000 psi. Pullbox and handhole covers in parking lots, sidewalks, and turfed areas shall be of the same material as the box. Concrete pullboxes shall consist of precast reinforced concrete boxes, extensions, bases, and covers.

2.7 CONDUIT, DUCTS AND FITTINGS

2.7.1 Conduit, Rigid Steel

Rigid steel conduit shall conform to ANSI C80.1 and UL 6.

2.7.2 Conduit Coatings

Underground metallic conduit and fittings shall be coated with a plastic resin system conforming to NEMA RN 1, Type 40. Epoxy systems may also be used.

2.7.3 Conduit Fittings and Outlets

2.7.3.1 Boxes, Metallic Outlets

NEMA OS 1 and UL 514A.

2.7.3.2 Fittings for Conduit and Outlet Boxes

UL 514B.

2.7.4 Non-Metallic Duct

Non-metallic duct lines and fittings utilized for underground installation shall be suitable for the application. Duct shall be thick-wall, single, round-bore type. Material of one type shall be used. Acrylonitrile-butadiene-styrene (ABS) duct shall conform to NEMA TC 6and NEMA TC 9. High-density conduit shall conform to UL 651A. Schedule 40 polyvinyl chloride (PVC) shall conform to UL 651. Plastic utility duct and fittings manufactured without a UL label or listing shall be provided with a certification as follows: "The materials are suitable for use with 167 degree F wiring. No reduction of properties in excess of that specified for

materials with a UL label or listing will be experienced if samples of the finished product are operated continuously under the normal conditions that produce the highest temperature in the duct."

2.8 GROUND RODS

Ground rods shall be of copper clad steel conforming to UL 467 not less than 3/4 inch in diameter by 10 feet in length of the sectional type driven full length into earth.

2.9 POLES

Metal poles shall be the pole manufacturer's standard design for supporting the number of fixtures indicated. Poles shall be designed for a wind velocity of 100 mph at the base of the pole, for a wind gust factor of 1.3, and for the height and drag factors recommended by AASHTO LTS-2. The effective projected area of luminaires and other pole-mounted devices shall be taken into account in pole design. Poles shall have grounding provisions. The type of pole shaft material provided shall not be mixed on any project. Grounding connection shall be provided near the bottom of each metal pole and at each concrete pole anchor base. Scratched, stained, chipped, or dented poles shall not be installed.

2.9.1 Steel Poles

Steel poles shall be hot-dip galvanized in accordance with ASTM A 123. Poles shall have tapered tubular members, either round in cross-section or polygonal. Pole shafts shall be one piece. Poles shall be welded construction with no bolts, rivets, or other means of fastening except as specifically approved. Pole markings shall be approximately 3 to 4 feet above grade and shall include manufacturer, year of manufacture, top and bottom diameters, length, and a loading tree. Attachment requirements shall be provided as indicated, including grounding provisions. Climbing facilities are not required. Bases shall be of the anchor bolt-mounted type. Bases shall be anchor bolt mounted. Pretreatment for galvanized steel poles shall conform to MS DOD-P-15328 and shall be prepared just before use. Primer coat for galvanized steel poles conform to FS TT-P-641. Finish coat for steel poles shall consist 2 pounds of aluminum pigment meeting CID A-A-341, Type II, Class B, gallon of varnish meeting FS TT-V-81, Type II, Class B, and shall be prepared just before use. Primer and finish shall match finish of existing poles in project vicinity.

2.9.2 Anchor Bolts

Anchor bolts shall be the pole manufacturer's standard, but not less than necessary to meet the pole wind and ice loading, herein and other specified design requirements.

2.10 POLE LINE HARDWARE

Zinc coated hardware shall conform to ANSI C135.1 and ANSI C135.14, and steel hardware material shall conform to ASTM A 575 and ASTM A 576. Hardware shall be hot-dip galvanized in accordance with ASTM A 153.

2.11 ILLUMINATION

2.11.1 General Lighting

Luminaires, ballasts, lamps, and control devices required for general area and outdoor lighting, including floodlighting, shall be in accordance with specifications and contract drawings.

2.12 LAMPS AND BALLASTS, HIGH INTENSITY DISCHARGE (HID) SOURCES

2.12.1 High-Pressure Sodium

Lamps shall conform to ANSI C78.1351. Ballasts shall conform to ANSI C82.4, or UL 1029. High-pressure sodium lamps shall be clear.

2.12.2 Metal-Halide

Lamps shall be made by a manufacturer with not less than 5 years experience in making metal-halide lamps. Metal-halide lamps shall conform to ANSI C78.1375. Ballasts shall conform to ANSI C82.4or UL 1029.

2.13 LAMPS, FLUORESCENT

Fluorescent lamps shall have standard cool-white color characteristics and shall not require starter switches. The lamps shall be of the rapid-start type.

2.14 LUMINAIRE COMPONENTS

Luminaire components shall conform to the following: attachments, ANSI C136.3; voltage classification, ANSI C136.2; field identification marking, ANSI C136.15; interchangeability, ANSI C136.6 and ANSI C136.9; and sockets, ANSI C136.11.

2.15 LIGHTING CONTROL EQUIPMENT

2.15.1 Photo-Control Devices

Photo-control devices shall conform to ANSI C136.10. Each photo-control element shall be a replaceable, weatherproof, plug-in or twist-lock assembly adjustable operation range of approximately 0.5 to 5.0 foot-candles..

2.15.2 Timer Control Switches

Astronomic dial type arranged to turn "ON" at sunset, and turn "OFF" at a pre-determined time between 2030 hours and 0230 hours or sunrise, automatically changing the settings each day in accordance with seasonal changes of sunset and sunrise shall be provided. A switch rated 120 volts, having battery backed electronic clock to maintain accurate time for a minimum of 7 hours following a power failure shall be provided. A time switch with a manual on-off bypass switch shall be provided. Housing for the time switch shall be a surface mounted, NEMA 1 (indoor) enclosure conforming to NEMA ICS 6.

2.15.3 Manual Control Switches

Manual control switches shall conform to UL 98. The switches shall be the heavy-duty type and shall be suitable for operation on a 120 volt, 60 Hz system. The number of poles and ampere rating shall be as indicated. Switch construction shall be such that a screwdriver will be required to open the switch door when the switch is on. The selector switch shall have a minimum of three positions: ON, OFF, and AUTOMATIC. The automatic selection shall be used when photoelectric or timer control is desired. The selector switch shall interface with the lighting system magnetic contactor and control its activity.

2.15.4 Magnetic Contactor

Magnetic contactors shall be mechanically held, electrically operated, and shall conform to NEMA ICS 1 and NEMA ICS 2. The contactor shall be suitable for 277 volts, single phase, 60 Hz. Coil voltage shall be 120 volts. Maximum continuous ampere rating and number of poles shall be as indicated on drawings. Enclosures for contactors mounted indoors shall be NEMA ICS 6, Type 1. Each contactor shall be provided with a spare, normally open auxiliary contact. Terminal lugs shall be coordinated with the wire size.

2.16 LUMINAIRES, FLOODLIGHTING

2.16.1 HID

HID lighting fixtures shall conform to UL 1572.

2.17 FIXTURES

Standard fixtures shall be as detailed on the contract drawings which accompany and form a part of this specification. Special fixtures shall be as indicated on the drawings. Illustrations shown on these sheets or on the drawings are indicative of the general type desired and are not intended to restrict selection to fixtures of any particular manufacturer. Fixtures of similar design, equivalent light distribution and brightness characteristics, equal finish and quality will be acceptable as approved.

2.17.1 Accessories

Accessories such as straps, mounting plates, nipples, or brackets shall be provided for proper installation.

2.17.2 In-Line Fuse

An in-line fuse shall be provided for each fixture, and shall consist of a fuse and a UL approved waterproof fuse holder rated at 30 amperes, 600 volts, with insulated boots. Fuse rating shall be 600 volts.

3 EXECUTION

3.1 GENERAL

The Contractor shall install all system components, including government furnished equipment, and appurtenances in accordance with the manufacturer's instructions, ANSI C2, and contract documents, and shall furnish necessary

hardware, fixtures, cables, wire, connectors, interconnections, services, and adjustments required for a complete and operable system.

3.1.1 Current Site Conditions

The Contractor shall verify that site conditions are in agreement with the design package. The Contractor shall report all changes to the site or conditions that will affect performance of the system to the Government. The Contractor shall not take any corrective action without written permission from the Government.

3.1.2 Existing Equipment

The Contractor shall connect to and utilize existing lighting equipment and devices as shown. Lighting equipment that is usable in their original configuration without modification may be reused with Government approval. The Contractor shall perform a field survey, including testing and inspection of existing lighting equipment and control lines intended to be incorporated into the lighting system, and furnish a report to the Government. For those items considered nonfunctioning, specification sheets, or written functional requirements to support the findings and the estimated cost to correct the deficiency shall be provided with the report. As part of the report, the Contractor shall include the scheduled need date for connection to all existing equipment. The Contractor shall make written requests and obtain approval prior to disconnecting any control lines and equipment, and creating equipment downtime. Such work shall proceed only after receiving Government approval of these requests. If any device fails after the Contractor has commenced work on that device, the Contractor shall diagnose the failure and perform any necessary corrections to the equipment. The Government is responsible for maintenance and repair of Government equipment. The Contractor shall be held responsible for repair costs due to Contractor negligence or abuse of Government equipment.

3.2 ENCLOSURE PENETRATIONS

Enclosure penetrations shall be from the bottom unless the system design requires penetrations from other directions. Penetrations of interior enclosures involving transitions of conduit from interior to exterior, and penetrations on exterior enclosures shall be sealed with rubber silicone sealant to preclude the entry of water. The conduit riser shall terminate in a hot-dipped galvanized metal cable terminator. The terminator shall be filled with an approved sealant as recommended by the cable manufacturer, and in such a manner that the cable is not damaged.

3.3 PREVENTION OF CORROSION

3.3.1 Steel Conduits

Steel conduits installed underground or under slabs-on-grade, or penetrating slabs-on-grade, shall be field wrapped with 0.010 inch thick pipe-wrapping plastic tape applied with a 50 percent overlap, or shall have a factory-applied plastic resin, epoxy coating. Zinc coating may be omitted from steel conduit which has a factory-applied epoxy coating.

3.3.2 Cold Galvanizing

Field welds and/or brazing on factory galvanized boxes, enclosures, conduits, etc. shall be coated with a cold galvanized paint containing at least 95 percent zinc by weight.

3.4 CONNECTIONS TO BUILDINGS

Cables shall be extended into the buildings as indicated and shall be properly connected to the indicated equipment. Conduits to the indicated equipment from a point 5 feet outside the building wall and 3 feet below finished grade are specified in Section 16415 ELECTRICAL WORK, INTERIOR. After installation of cables, conduits shall be sealed to prevent moisture or gases from entering the building.

3.5 DUCT LINES

3.5.1 Requirements

Numbers and size of ducts shall be as indicated. Duct lines shall be laid with a minimum slope of 4 inches per 100 feet.Depending on the contour of the finished grade, the high point may be at a terminal, a manhole, a handhole, or between manholes or handholes. Short radius manufactured 90 degree duct bends may be used only for pole or equipment risers, unless specifically indicated as acceptable. The minimum manufactured bend radius shall be 18 inches for ducts of less than 3 inches in diameter, and 36 inches for duct 3 inchesor greater in diameter. Otherwise, long sweep bends having a minimum radius of 25 feet shall be used for a change of direction of more than 5 degrees, either horizontally or vertically. Both curved and straight sections may be used to form long sweep bends, but the maximum curve used shall be 30 degrees and manufactured bends shall be used. Ducts shall be provided with end bells when duct lines terminate in handholes.

3.5.2 Treatment

Ducts shall be kept clean of concrete, dirt, or foreign substances during construction. Field cuts requiring tapers shall be made with proper tools and shall match factory tapers. A coupling recommended by the duct manufacturer shall be used when an existing duct is connected to a duct of different material or shape. Ducts shall be stored to avoid warping and deterioration with ends sufficiently plugged to prevent entry of any water or solid substances. Ducts shall be thoroughly cleaned before being laid. Plastic ducts shall be stored on a flat surface and protected from the direct rays of the sun.

3.5.3 Nonencased Direct-Burial

Top of duct lines shall be not less than 36 inches below finished grade and shall be installed with a minimum of 3 inches of earth around each duct, except that between adjacent electric power and communication ducts, 12 inches of earth is required. Bottom of trenches shall be graded toward handholes and shall be smooth and free of stones, soft spots, and sharp objects. Where bottoms of trenches comprise materials other than sand, a 3 inch layer of sand shall be laid first and compacted to approximate densities of surrounding firm soil before installing ducts. Joints in adjacent tiers of duct shall be vertically staggered at least 6 inches. The first 6 inch layer of backfill cover shall be sand compacted as previously

specified. The rest of the excavation shall be backfilled and compacted in 3 to 6 inch layers. Duct banks may be held in alignment with earth. However, high tiered banks shall use a wooden frame or equivalent form to hold ducts in alignment prior to backfilling.

3.5.4 Installation of Couplings

Joints in each type of duct shall be made up in accordance with the manufacturer's recommendation for the particular type of duct and coupling selected and as approved.

3.5.5 Duct Line Markers

Duct line markers shall be provided at the ends of long duct line stubouts or for other duct locations that are indeterminate because of duct curvature or terminations at completely below-grade structures. In addition to markers, a 5 mil brightly colored plastic tape, not less than 3 inches in width and suitably inscribed at not more than 10 feet on centers with a continuous metallic backing and a corrosion-resistant 1 mil metallic foil core to permit easy location of the duct line, shall be placed approximately 12 inches below finished grade levels of such lines.

3.6 HANDHOLES

The exact locations shall be determined after carefully considering the locations of other utilities, grading, and paving. Exact locations shall be approved before construction is started.

3.6.1 Construction

Handholes shall be constructed as indicated on drawings, including appurtenances. Top, walls, and bottom shall consist of reinforced concrete. Walls and bottom shall be of monolithic construction. Concrete shall be 3000 psi at 28 days. Precast concrete handholes having the same strength and inside dimensions as cast-in-place concrete handholes may be used. In paved areas, the top of entrance covers shall be flush with the finished surface of the paving. In unpaved areas, the top of entrance covers shall be approximately 1/2 inch above the finished grade. Where finished grades are in cut areas, unmortared brick shall be installed between the top of handhole and entrance frame to temporarily elevate the entrance cover to existing grade level. Where duct lines enter walls, the sections of duct may be cast in the concrete or may enter the wall through a suitable opening. The openings around entering duct lines shall be caulked tight with lead wool or other approved material.

3.6.2 Appurtenances

The following appurtenances shall be provided for each handhole.

3.6.3 Cable Pulling-In Irons

A cable pulling-in iron shall be installed in the wall opposite each duct line entrance.

3.6.4 Ground Rods

In each handhole, at a convenient point close to the wall, a ground rod conforming to paragraph GROUNDING shall be driven into the earth before the floor is poured; approximately 4 inches of the ground rod shall extend above the floor after pouring. When precast concrete units are used, the top of the ground rod may be below the floor; a No. 1/0 AWG copper ground conductor shall be brought inside through a watertight sleeve in the wall.

3.7 POLE INSTALLATION

Pole lengths shall provide a luminaire mounting height of 30 feet. Luminaire mounting height may be increased by the height of the concrete foundation base where required. Electrical cabling shall be provided to the light pole as specified. The mount interfaces shall have ac power connected, and the pole wiring harness shall be connected to the luminaire. Pole installation shall conform to the manufacturer's recommendations, NFPA 70, and ANSI C2. Poles shall be set straight and plumb.

3.7.1 Pole Brackets

Brackets shall be installed as specified by the manufacturer and as shown on drawings. Mounting hardware shall be sized appropriately to secure the mount, luminaire, and housing with wind and ice loading normally encountered at the site.

3.7.2 Concrete Foundations

Concrete foundations shall have anchor bolts accurately set in the foundation using a template supplied by the pole manufacturer. Once the concrete has cured, the pole shall be set on the foundation, leveled on the foundation bolts, and secured with the holding nuts. The space between the foundation and the pole base shall be grouted. Concrete and grout work shall conform to Section 03300 CONCRETE FOR BUILDING CONSTRUCTION. Concrete shall be 3000 psi at 28 days.

3.7.3 Steel Pole Installation

Poles shall be mounted on cast-in-place or power-installed screw foundations. Conduit elbows shall be provided for cable entrances into pole interiors.

3.7.3.1 Cast-In-Place Foundations

Concrete foundations, sized as indicated, shall have anchor bolts accurately set in foundations using templates supplied by the pole manufacturer. Concrete work and grouting is specified in Section 03300CONCRETE FOR BUILDING CONSTRUCTION. After the concrete has cured, pole anchor bases shall be set on foundations and leveled by shimming between anchor bases and foundations or by setting anchor bases on leveling nuts and grouting. Poles shall be set plumb. Anchor bolts shall be the manufactures standard, and not less than necessary to meet the pole wind loading and other specified design requirements.

3.8 LIGHTING

3.8.1 Lamps

Lamps of the proper type, wattage, and voltage rating shall be delivered to the project in the original containers and installed in the fixtures just before completion of the project.

3.8.2 Fixture Installation

Standard fixtures shall be installed as detailed on the contract drawings, which accompany and form a part of this specification. Special fixtures shall be as indicated on drawings. Illustrations shown on the drawings are indicative of the general type desired and are not intended to restrict selection of fixtures to any particular manufacturer. Fixtures of similar design, equivalent light-distribution and brightness characteristics, and equal finish and quality will be acceptable as approved.

3.8.2.1 Accessories

Accessories such as straps, mounting plates, nipples, or brackets shall be installed as required for proper installation.

3.8.2.2 In-Line Fuses

An in-line fuse shall be provided for each fixture.

3.9 LIGHTING CONTROL SYSTEM

3.9.1 Photo-Control

Lighting luminaires shall be controlled as indicated on the contract drawings.

3.9.2 Time Control Switches

Switches shall be installed with not less than four 1/4 inch bolts. The use of sheet metal screws will not be allowed.

3.9.3 Magnetic Contactors

Terminal lugs shall be coordinated with the wire size. Switches shall be securely fastened to the supporting structure or wall using not less than four 1/4 inch bolts. The use of sheet metal screws will not be allowed.

3.10 GROUNDING

Grounding shall be in conformance with NFPA 70, the contract drawings, and the following. Grounding conductors shall be soft-drawn, stranded copper. Ground rods shall be driven into the earth so that after the installation is complete, the top of the ground rod will be approximately 1 foot below finished grade, except in handholes.

3.10.1 Ground Rods and Pole Butt Electrodes

The resistance to ground shall be measured using the fall-of-potential method described in IEEE Std 81. The maximum resistance of a driven ground

rod shall not exceed 25 ohms under normally dry conditions. Whenever the required ground resistance is not met, additional electrodes shall be provided interconnected with grounding conductors as indicated, to achieve the specified ground resistance. In high ground resistance, UL listed chemically charged ground rods may be used. If the resultant resistance exceeds 25 ohms measured not less than 48 hours after rainfall, the Contracting Officer shall be notified immediately. Connections below grade shall be fusion welded. Connections above grade shall be fusion welded or shall use UL 467 approved connectors.

3.10.2 Items to be Grounded

Ground conductors, metallic conduits, junction boxes, and noncurrent-carrying metallic parts of equipment shall be grounded. Connections above grade shall be made with solderless connectors, and those below grade shall be made by a fusion-welding process.

3.10.3 Lighting Pole

One ground rod shall be provided at each pole. Bases of metal or concrete lighting poles shall be connected to ground rods by means of No. 8 AWG bare copper wire.

3.10.4 Handhole

In each handhole, at a convenient point close to the wall, a ground rod shall be driven into the earth before the floor is poured, and approximately 4 inches of the ground rod shall extend above the floor after pouring. When precast concrete units are used, the top of the ground rod may be below the floor, and a No. 1/0 AWG copper ground conductor shall be brought inside through a watertight sleeve in the wall. Connection to ground rods shall be by means of bolted-clamp terminals or by an approved fusion-welding process. Ground wires shall be neatly and firmly attached to handhole walls, and the amount of exposed bare wire shall be held to a minimum.

3.11 TESTS

3.11.1 Operating Test

After the installation is completed and at such time as the Contracting Officer may direct, the Contractor shall conduct an operating test for approval. The equipment shall be demonstrated to operate in accordance with the requirements specified. The test shall be performed in the presence of the Contracting Officer. The Contractor shall furnish instruments and personnel required for the test, and the Government will furnish the necessary electric power.

3.11.2 Ground Resistance Measurements

The resistance to ground shall be measured by the fall-of-potential method described in IEEE Std 81.

The contractor shall maintain a separate set of drawings, elementary diagrams and wiring diagrams of the lighting to be used for "as-built" drawings. This set shall be accurately kept up to date by the Contractor with all changes and additions to the lighting system. In addition to being complete and accurate, this set of drawings shall be kept neat and shall not

be used for installation purposes. Upon completion of the as-built drawings, a representative of the Government will review the as-built work with the Contractor. If the as-built work is not complete, the Contractor will be so advised and shall complete the work as required.

END OF SECTION

SECTION 16710

PREMISES DISTRIBUTION SYSTEM

1 GENERAL

1.1 REFERENCES

The publications listed below form a part of this specification to the extent referenced. The publications are referred to in the text by basic designation only.

ELECTRONIC INDUSTRIES ASSOCIATION (EIA)

EIA ANSI/TIA/EIA-568-A	(1995) Commercial Building Telecommunications Cabling Standard
EIA ANSI/TIA/EIA-569	(1990) Commercial Building Standard for Telecommunications Pathways and Spaces
EIA ANSI/TIA/EIA-606	(1993) Administration Standard for the Telecommunications Infrastructure of Commercial Buildings
EIA ANSI/TIA/EIA-607	(1994) Commercial building Grounding and Bonding Requirements for Telecommunications
EIA TSB 67	(1995) Transmission Performance Specifications for Field Testing of Unshielded Twisted Pair Cabling Systems

IBM PUBLICATION CORPORATION (IBM)

IBM GA27-3361-07	(1987) LAN Cabling System - Planning and Installation
IBM GA27-3773-1	(1987) Cabling System Technical Interface Specifications

INSULATED CABLE ENGINEERS ASSOCIATION (ICEA)

ICEA S-80-576	(1994) Communications Wire and Cable for Wiring of Premises
ICEA S-83-596	(1994) Fiber Optic Premises Distribution Cable

NATIONAL FIRE PROTECTION ASSOCIATION (NFPA)

NFPA 70	(1996) National Electrical Code

UNDERWRITERS LABORATORY (UL)

UL 50	(1995) Enclosures for Electrical Equipment

1.2 SYSTEM DESCRIPTION

The premises distribution system shall consist of inside-plant horizontal, riser, and backbone cables and connecting hardware to transport telephone and data (including LAN) signals between equipment items in a building.

1.3 ENVIRONMENTAL REQUIREMENTS

Connecting hardware shall be rated for operation under ambient conditions of 32 to 140 degrees F and in the range of 0 to 95 percent relative humidity, noncondensing.

1.4 QUALIFICATIONS

1.4.1 Minimum Contractor Qualifications

All work under this section shall be performed by and all equipment shall be furnished and installed by a certified Telecommunications Contractor, hereafter referred to as the Contractor. With the exception of furnishing and installing conduit, electrical boxes, and pullwires, this work shall not be done by the Electrical Contractor. The Contractor shall have the following qualifications in Telecommunications Systems installation:

a. Contractor shall have a minimum of 3 years experience in the application, installation and testing of the specified systems and equipment.

b. All supervisors and installers assigned to the installation of this system or any of its components shall have factory certification from each equipment manufacturer that they are qualified to install and test the provided products. General electrical trade staff (electricians) shall not be used for the installation of the premises distribution system cables and associated hardware.

c. All installers assigned to the installation of this system or any of its components shall have a minimum of 3 years experience in the installation of the specified copper and components.

1.4.2 Minimum Manufacturer Qualifications

The equipment and hardware provided under this contract will be from manufacturers that have a minimum of 3 years experience in producing the types of systems and equipment specified.

1.5 SUBMITTALS

Government approval is required for submittals with a "GA" designation; submittals having an "FIO" designation are for information only. The following shall be submitted in accordance with Section 01330 SUBMITTAL PROCEDURES:

SD-01 Data

Spare Parts; FIO.

Lists of spare parts, tools, and test equipment for each different item of material and equipment specified, after approval of detail drawings, not

later than 2 months prior to the date of beneficial occupancy. The data shall include a complete list of parts and supplies, with current unit prices and source of supply, and a list of spare parts recommended for stocking.

SD-04 Drawings

Premises Distribution System; GA.

Detail drawings including a complete list of equipment and material. Detail drawings shall contain complete wiring and schematic diagrams and other details required to demonstrate that the system has been coordinated and will function properly as a system. Drawings shall include vertical riser diagrams, equipment rack details, elevation drawings of telecommunications closet walls, outlet face plate details for all outlet configurations, sizes and types of all cables, conduits, and cable trays. Drawings shall show proposed layout and anchorage of equipment and appurtenances, and equipment relationship to other parts of the work including clearance for maintenance and operation.

Record Drawings; GA.

Record drawings for the installed wiring system infrastructure per EIA ANSI/TIA/EIA-606. The drawings shall show the location of all cable terminations and location and routing of all backbone and horizontal cables. The identifier for each termination and cable shall appear on the drawings.

SD-06 Instructions

Manufacturer's Recommendations; GA.

Where installation procedures, or any part thereof, are required to be in accordance with the recommendations of the manufacturer of the material being installed, printed copies of these recommendations, prior to installation shall be provided. Installation of the item will not be allowed to proceed until the recommendations are received and approved.

SD-08 Statements

Test Plan; GA.

Test plan defining the tests required to ensure that the system meets technical, operational and performance specifications, 60 days prior to the proposed test date. The test plan must be approved before the start of any testing. The test plan shall identify the capabilities and functions to be tested, and include detailed instructions for the setup and execution of each test and procedures for evaluation and documentation of the results.

Qualifications; GA.

The qualifications of the Manufacturer, Contractor, and the Installer to perform the work specified herein. This shall include proof of the minimum qualifications specified herein.

SD-09 Reports

Test Reports; GA.

Test reports in booklet form with witness signatures verifying execution of tests. Test results will also be provided on 3-1/2 inch diskettes in ASCII format. Reports shall show the field tests performed to verify compliance with the specified performance criteria. Test reports shall include record of the physical parameters verified during testing. Test reports shall be submitted within 14 days after completion of testing.

SD-13 Certificates

Premises Distribution System; GA.

Written certification that the premises distribution system complies with the EIA ANSI/TIA/EIA-568-A, EIA ANSI/TIA/EIA-569, and EIA ANSI/TIA/EIA-606 standards.

Materials and Equipment; GA.

Where materials or equipment are specified to conform, be constructed or tested to meet specific requirements, certification that the items provided conform to such requirements. Certification by a nationally recognized testing laboratory that a representative sample has been tested to meet the requirements, or a published catalog specification statement to the effect that the item meets the referenced standard, will be acceptable as evidence that the item conforms. Compliance with these requirements does not relieve the Contractor from compliance with other requirements of the specifications.

Installers; GA.

The Contractor shall submit certification that all the installers are factory certified to install and test the provided products.

SD-18 Records

Record Keeping and Documentation; GA.

Documentation on cables and termination hardware in accordance with EIA ANSI/TIA/EIA-606.

1.6 DELIVERY AND STORAGE

Equipment delivered and placed in storage shall be stored with protection from the weather, humidity and temperature variation, dirt and dust or other contaminants.

1.7 OPERATION AND MAINTENANCE MANUALS

Commercial off the shelf manuals shall be furnished for operation, installation, configuration, and maintenance for all products provided as a part of the premises distribution system. Specification sheets for all cable, connectors, and other equipment shall be provided.

1.8 RECORD KEEPING AND DOCUMENTATION

1.8.1 Cables

A record of all installed cable shall be provided in hard copy format per EIA ANSI/TIA/EIA-606. The cable records shall include the required data fields for each cable and complete end-to-end circuit report for each complete circuit from the assigned outlet to the entry facility per EIA ANSI/TIA/EIA-606.

1.8.2 Termination Hardware

A record of all installed patch panels and outlets shall be provided in hard copy format per EIA ANSI/TIA/EIA-606. The hardware records shall include only the required data fields per EIA ANSI/TIA/EIA-606.

2 PRODUCTS

2.1 MATERIALS AND EQUIPMENT

Materials and equipment shall be the standard products of a manufacturer regularly engaged in the manufacture of the products and shall be the manufacturer's latest standard design that has been in satisfactory use for at least 1 year prior to installation. Materials and equipment shall conform to the respective publications and other requirements specified below and to the applicable requirements of NFPA 70.

2.2 UNSHIELDED TWISTED PAIR CABLE SYSTEM

2.2.1 Cable Insulation

For each individual Category 5 cable, the insulation, material used on each pair shall be exactly the same in all physical, electrical, and chemical respects. The use of Teflon insulated, plenum rated Category 5 cable is required for plenum applications and is acceptable for non-plenum applications. If Teflon insulated plenum rated cable is used by the Contractor, it shall be Type 4x0, where all four pairs are Teflon insulated. Type 3x1 and 2x2 are not acceptable.

2.2.2 Riser Cable

Riser cable shall meet the requirements of ICEA S-80-576 and EIA ANSI/TIA/EIA-568-A for Category 3 100-ohm unshielded twisted pair cable. Cable shall be label-verified. Cable jacket shall be factory marked at regular intervals indicating verifying organization and performance level. Conductors shall be solid untinned copper 24 AWG. Cable shall be rated CMR per NFPA 70.

2.2.3 Horizontal Cable

Horizontal cable shall meet the requirements of EIA ANSI/TIA/EIA-568-A for Category 3 or 5 horizontal cable. Cable shall be label-verified. Cable jacket shall be factory marked at regular intervals indicating verifying organization and performance level. Conductors shall be solid untinned copper 24 AWG. Sheath on Category 5 cable shall be blue and sheath on Category 3 cable shall be white.

2.2.4 Connecting Hardware

Connecting and cross-connecting hardware shall be the same category as the cable it serves. Hardware shall be in accordance with and EIA ANSI/TIA/EIA-568-A.

2.2.4.1 Voice and Data Termination Device

Termination devices shall consist of modular duplex mounting frames equipped with miniature 6 and 8-position modular jacks as shown on the drawings. Telephone, FAX and modem outlets will consist of RJ11 (6 pin) jack modules. Computer outlets will consist of (Category 5) RJ45 (8 pin) jack modules. All jacks shall have rear-mounted, insulation-displacement terminals for termination of station drop cable. RJ11 jacks will be arranged for USOC wiring sequence and Category 5 jacks be arranged for EIA ANSI/TIA/EIA-568-B wiring sequence.

2.2.4.2 Telephone Wall Outlets

Wall outlets for telephones shall consist of a 6 position, 6 conductor jack in a stainless steel metal face plate that is used as a wall jack for modular wall telephone sets. The 6 position jack will be arranged for USOC wiring sequence.

2.2.4.3 Face Plates

Face plates shall be standard high impact ivory plastic single gang covers arranged as indicated on the drawings.

2.2.4.4 Modular Patch Panel Assembly

The modular patch panel assemblies shall meet the requirements of EIA TSB 40, and consist of a minimum of 24 keyed Category 5 jack modules mounted in a 22 gauge steel panel 19 inches wide by 3-1/2 inches high. The panel shall be arranged to mount in a standard EIA 19-inch wide equipment rack and be equipped with wire and patch cable retainers front and back. The jack modules shall be configured for T568B pin assignments with BIX or 110 type connections. Each jack module will have a clear plastic covered label retainer for identification of the associated data outlet.

2.2.4.5 Terminal Blocks

Terminal blocks shall be wall mounted wire termination units consisting of insulation displacement connectors mounted in plastic blocks, frames or housings. Blocks shall be type 110 which meet the requirements of EIA ANSI/TIA/EIA-568-A for Category 5. Blocks shall be mounted on standoffs and shall include cable management hardware. Insulation displacement connectors shall terminate 22 or 24 gauge solid copper wire as a minimum, and shall be connected in pairs so that horizontal cable and connected jumper wires are on separate connected terminals.

2.3 EQUIPMENT RACKS

2.3.1 Floor Mounted Cabinets (Equipment Racks)

Equipment cabinets shall be floor mounted enclosures with side panels, acrylic plastic front doors, rear louvered metal doors, depth-adjustable front and rear mounting rails, and louvered top. Ventilation fans will not be included. Vertical cable management devices shall be integral to the

cabinet. Power strips with 12 outlets shall be provided within the cabinet. Equipment racks shall mount equipment 19 inches wide and shall be 72 inches high and 30 inches deep. Cabinet exteriors shall be painted gray.

2.3.2 Cable Guides

Cable guides shall be specifically manufactured for the purpose of routing cables, wires and patch cords horizontally and vertically on 19 inch equipment racks. Cable guides shall consist of ring or bracket-like devices mounted on rack panels for horizontal use or individually mounted for vertical use. Cable guides shall mount to racks by screws and/or nuts and lockwashers.

2.4 EQUIPMENT MOUNTING BACKBOARD

Plywood backboards shall be BC-rated, sized as shown, painted with white or light colored fire retardant paint.

2.5 TELECOMMUNICATIONS OUTLET BOXES

Electrical boxes for telecommunication outlets shall be 4-11/16 inch square by 2-1/8 inches deep with minimum 3/8 inch deep single or two gang plaster ring as shown. Provide a minimum 1 inch conduit.

3 EXECUTION

3.1 INSTALLATION

System components and appurtenances shall be installed in accordance with NFPA 70, manufacturer's instructions and as shown. Necessary interconnections, services, and adjustments required for a complete and operable signal distribution system shall be provided. Components shall be labeled in accordance with EIA ANSI/TIA/EIA-606. Penetrations in fire-rated construction shall be firestopped in accordance with Section 07270 FIRESTOPPING. Conduits, outlets and raceways shall be installed in accordance with Section 16415 ELECTRICAL WORK, INTERIOR. Wiring shall be installed in accordance with EIA ANSI/TIA/EIA-568-A and as specified in Section 16415 ELECTRICAL WORK, INTERIOR. Wiring, and terminal blocks and outlets shall be marked in accordance with EIA ANSI/TIA/EIA-606. Cables shall not be installed in the same cable tray, utility pole compartment, or floor trench compartment with ac power cables. Cables not installed in conduit or wireways shall be properly secured and neat in appearance and, if installed in plenums or other spaces used for environmental air, shall comply with NFPA 70 requirements for this type of installation.

3.1.1 Horizontal Distribution Cable

The rated cable pulling tension shall not be exceeded. Cable shall not be stressed such that twisting, stretching or kinking occurs. Cable shall not be spliced. Fiber optic cables shall be installed either in conduit or through type cable trays to prevent microbending losses. Copper cable not in a wireway shall be suspended a minimum of 8 inches above ceilings by cable supports no greater than 60 inches apart. Cable shall not be run through structural members or in contact with pipes, ducts, or other potentially damaging items. Placement of cable parallel to power conductors shall be avoided, if possible; a minimum separation of 12 inches shall be maintained when such placement cannot be avoided. Cables shall be

terminated; no cable shall contain unterminated elements. Minimum bending radius shall not be exceeded during installation or once installed. Cable ties shall not be excessively tightened such that the transmission characteristics of the cable are altered.

3.1.2 Riser and Backbone Cable

Vertical cable support intervals shall be in accordance with manufacturer's recommendations. Cable bend radius shall not be less than ten times the outside diameter of the cable during installation and once installed. Maximum tensile strength rating of the cable shall not be exceeded. Cable shall not be spliced.

3.1.3 Telecommunications Outlets

3.1.3.1 Faceplates

As a minimum each jack shall be labeled as to its function and a unique number to identify cable link.

3.1.3.2 Cables

Unshielded twisted pair cables shall have a minimum of 6 inches of slack cable loosely coiled into the telecommunications outlet boxes. Minimum manufacturers bend radius for each type of cable shall not be exceeded.

3.1.3.3 Pull Cords

Pull cords shall be installed with the cable in all conduit serving telecommunications outlets.

3.1.4 Terminal Blocks

Terminal blocks shall be mounted in orderly rows and columns. Adequate vertical and horizontal wire routing areas shall be provided between groups of blocks. Industry standard wire routing guides shall be utilized.

3.1.5 Unshielded Twisted Pair Patch Panels

Patch panels shall be mounted in equipment racks with sufficient modular jacks to accommodate the installed cable plant plus 10 percent spares. Cable guides shall be provided above, below and between each panel.

3.1.6 Equipment Racks

Open frame equipment racks shall be bolted to the floor slab at 4 points. Cable guides shall be bolted or screwed to racks. Racks shall be installed level. Ganged racks shall be bolted together. Ganged rack cabinets shall have adjacent side panels removed. Wall mounted racks shall be secured to the mounting surface to prevent fully loaded racks from separating from the mounting surface.

3.1.7 Rack Mounted Equipment

Equipment to be rack mounted shall be securely fastened to racks by means of the manufacturer's recommended fasteners.

3.2 TERMINATION

Cables and conductors shall sweep into termination areas; cables and conductors shall not bend at right angles. Manufacturer's minimum bending radius shall not be exceeded. When there are multiple system type drops to individual workstations, relative position for each system shall be maintained on each system termination block or patch panel.

3.2.1 Unshielded Twisted Pair Cable

Each pair shall be terminated on appropriate outlets, terminal blocks or patch panels. No cable shall be unterminated or contain unterminated elements. Pairs shall remain twisted together to within the proper distance from the termination as specified in EIA ANSI/TIA/EIA-568-A. Conductors shall not be damaged when removing insulation. Wire insulation shall not be damaged when removing outer jacket.

3.3 GROUNDING

Signal distribution system ground shall be installed in the telecommunications entrance facility and in each telecommunications closet in accordance with EIA ANSI/TIA/EIA-607 and Section 16415 ELECTRICAL WORK, INTERIOR. Equipment racks shall be connected to the electrical ground bar.

3.4 ADDITIONAL MATERIALS

The Contractor shall provide the following additional materials required for facility startup.

a. 10 of each type outlet.

b. 10 of each type cover plate.

c. 1 of each type terminal block for each telecommunications closet.

d. 1 Set of any and all special tools required to establish a cross connect and to change and/or maintain a terminal block.

3.5 LABELING

3.5.1 Labeling

All cables, terminal blocks patch panels and outlets shall be labeled as indicated on the construction drawings. All labels shall be typed in a permanent and legible fashion and securely attached.

3.5.1.1 Cable Labels

Labels shall be placed at each termination end of the cable, and shall contain the following information: (From) location, outlet or block and terminal #, (To) location, outlet, patch jack or block and terminal #.

3.5.1.2 Terminal Blocks and Patch Panels

Cross-connect blocks and patch panels in the Entrance Room and in each Communications Room.

The outlet number shall be typed on the blue label strips affixed to each row of the station wiring blocks. Cable pair count shall be typed on the green label strips affixed to each row of the riser wiring blocks. The data outlet number shall be typed on the label strips affixed to each jack location on the patch panels.

3.5.1.3 Outlet Devices and Face Plates

The outlet ID number specified on the Contract Drawings shall be permanently affixed to the upper center of the face plate of each outlet.

3.6 TESTING

Materials and documentation to be furnished under this specification are subject to inspections and tests. All components shall be terminated prior to testing. Equipment and systems will not be accepted until the required inspections and tests have been made, demonstrating that the signal distribution system conforms to the specified requirements, and that the required equipment, systems, and documentation have been provided.

3.6.1 Unshielded Twisted Pair Tests

Before requesting a final inspection, the Contractor shall perform a test for the presence of ground on every conductor to insure 100 percent of all cable terminations are tested and troublefree. Using a commercial cable pair tester, the Contractor shall test every termination and provide permanent documentation of testing as follows:

3.6.1.1 Category 3 and Category 5 Circuits

Category 3 and Category 5 copper twisted pair cables shall be tested using a commercial cable pair tester certified for testing Category 5 (to 100 MHz) cabling. Using 568B option, test for:

a. Termination order

b. Polarity (pair reversals)

c. Continuity

d. Shorts

e. Length - Testing will be done from the patch panel jack to the outlet jack

f. Attenuation

g. Category 5 only: All Category 5 station drop cables shall be tested from each end, for Near End Cross Talk (NEXT)

h. Category 5 only: Attenuation, mutual capacitance and NEXT shall be tested by sweeping the cable from 1 MHz through 100 MHz. Readings shall be equal to or better than those specified in the manufacturer's data.

3.6.1.2 Category 5 Circuits

For all Category 5 cable, a visual examination of every termination at the cross-connect blocks and outlet must be conducted to verify the following:

a. No excess sheath shall have been removed at the termination point (e.g., sheath even with end of connector).

b. The number of twists per inch has been preserved to the point of connection.

END OF SECTION

SECTION 16721

FIRE DETECTION AND ALARM SYSTEM

1 GENERAL

1.1 REFERENCES

The publications listed below form a part of this specification to the extent referenced. The publications are referred to in the text by basic designation only.

AMERICAN NATIONAL STANDARDS INSTITUTE (ANSI)

ANSI C135.30	(1988) Zinc-Coated Ferrous Ground Rods for Overhead or Underground Line Construction

FACTORY MUTUAL ENGINEERING AND RESEARCH (FM)

FM P7825	(1994; Supple 1) Approval Guide

INSTITUTE OF ELECTRICAL AND ELECTRONICS ENGINEERS (IEEE)

IEEE C62.41	(1991) Surge Voltages in Low-Voltage AC Power Circuits

NATIONAL FIRE PROTECTION ASSOCIATION (NFPA)

NFPA 70	(1996) National Electrical Code
NFPA 72	(1996) National Fire Alarm Code
NFPA 90A	(1993) Installation of Air Conditioning and Ventilating Systems

UNDERWRITERS LABORATORIES (UL)

UL-04	(1994) Fire Protection Equipment Directory
UL 6	(1993) Rigid Metal Conduit
UL 38	(1994; Rev Jan 1994) Manually Actuated Signaling Boxes for Use with Fire-Protective Signaling Systems
UL 228	(1993) Door Closers-Holders, with or without Integral Smoke Detectors
UL 268	(1989; Rev May 1989) Smoke Detectors for Fire Protective Signaling Systems
UL 464	(1990) Audible Signal Appliances
UL 467	(1993) Grounding and Bonding Equipment

UL 521	(1993) Heat Detectors for Fire Protective Signaling Systems
UL 797	(1993) Electrical Metallic Tubing
UL 864	(1991; Rev thru May 1994) Control Units for Fire-Protective Signaling Systems
UL 1242	(1983; Rev thru Jul 1993) Intermediate Metal Conduit

1.2 GENERAL REQUIREMENTS

1.2.1 Standard Products

Material and equipment shall be the standard products of a manufacturer regularly engaged in the manufacture of the products and shall be items that have been in satisfactory use for at least 2 years prior to bid opening. Equipment shall be supported by a service organization that can provide service within 24 hours.

1.2.2 Nameplates

Major components of equipment shall have the manufacturer's name, address, type or style, voltage and current rating, and catalog number on a noncorrosive and nonheat-sensitive plate which is securely attached to the equipment.

1.2.3 Keys and Locks

Locks shall be keyed alike.

1.2.4 Tags

Tags with stamped identification number shall be furnished for keys and locks.

1.2.5 Verification of Dimensions

The Contractor shall become familiar with all details of the work, verify all dimensions in the field, and shall advise the Contracting Officer of any discrepancy before performing the work.

1.2.6 Compliance

The fire detection and internal alarm system and the central reporting system shall be configured in accordance with NFPA 72. The equipment furnished shall be compatible and be UL listed or FM approved or approved or listed by a nationally recognized testing laboratory in accordance with the applicable NFPA standards.

1.2.7 Manufacturer's Services

Services of a manufacturer's representative who is experienced in the installation, adjustment, testing, and operation of the equipment specified shall be provided. The representative shall supervise the installation, adjustment, and testing of the equipment.

1.3 SYSTEM DESIGN

1.3.1 Operation

The fire alarm and detection system shall be a complete, supervised addressable fire alarm system. The system shall be activated into the alarm mode by actuation of any alarm initiating device. The system shall remain in the alarm mode until initiating device is reset and the fire alarm control panel is reset and restored to normal. Alarm initiating devices shall be connected to signal line circuits (SLC), Style 6, in accordance with NFPA 72. Alarm indicating appliances shall be connected to indicating appliance circuits (IAC), Style Z in accordance with NFPA 72. A two-looped conduit system shall be provided so that if any one conduit and all conductors contained in that conduit are severed all IDC, IAC, or SLC on that circuit shall remain functional. A two-looped system is not applicable to the central fire alarm communication center from the local panels. All textual, audible, and visual appliances and systems shall comply with NFPA 72.

Addressable system shall be microprocessor or microcontroller based with a minimum word size of eight bits.

a. Sufficient memory shall be provided to perform as specified and as shown for addressable system.

b. Individual identity of each addressable device shall be provided for the following conditions:

   alarm
   trouble
   open
   short
   appliances missing/failed
   remote detector - sensitivity adjustment from the panel for smoke detectors

c. All addressable devices shall have the capability of individually being disabled or enabled from the panel.

1.3.2 Operational Features

The system shall have the following operating features:

a. Electrical supervision of alarm SLC and IAC. Smoke detectors shall have combined alarm initiating and power circuits.

b. Electrical supervision of the primary power (ac) supply, battery voltage, placement of alarm zone module (card, PC board) within the control panel, and transmitter tripping circuit integrity.

c. Trouble buzzer and trouble lamp (light emitting diode or neon light) to activate upon a single break, open, or ground fault condition which prevents the required normal operation of the system. The trouble signal shall also operate upon loss of primary power (ac) supply, low battery voltage, removal of alarm zone module (card, PC board), and disconnection of the circuit used for

transmitting alarm signals off-premises. A trouble alarm silence switch shall be provided which will silence the trouble buzzer, but will not extinguish the trouble indicator lamp. After the system returns to normal operating conditions, the trouble buzzer shall again sound until the silencing switch returns to normal position, unless automatic trouble reset is provided.

d. Transmitter disconnect switch to allow testing and maintenance of the system without activating the transmitter but shall provide a trouble signal when disconnected and a restoration signal when reconnected. One person test mode - Activating an initiating device in this mode will activate an alarm for a short period of time, then automatically reset the alarm, without activating the transmitter during the entire process.

e. Evacuation alarm silencing switch or switches which, when activated, will silence alarm devices, but will not affect the zone indicating lamp nor the operation of the transmitter. This switch shall be over-ridden upon activation of a subsequent alarm from an unalarmed zone and the alarm devices will be activated.

f. Electrical supervision of circuits used for supervisory signal services. Supervision shall detect any open, short, or ground.

g. Confirmation or verification modules used on smoke detection initiating circuits. The modules shall interrupt the transmission of an alarm signal to the system control panel for a factory set period. This interruption period shall be adjustable from 1 to 60 seconds and be factory set at 20 seconds. Immediately following the interruption period, a confirmation period shall be in effect during which time an alarm signal if present will be sent immediately to the control panel. All fire alarm devices other than smoke detectors shall be prohibited on circuits controlled by confirmation or verification modules.

h. Zones for alarm SLC shall be arranged as indicated on the contract drawings.

1.3.3 Alarm Functions

An alarm condition on a circuit shall automatically initiate the following functions:

a. Transmission of signals over the station Monaco Enterprises D700 radio fire reporting system. The signals shall be different for each zone.

b. Visual indications of the alarmed zones on the fire alarm control panel annunciator and on the remote annunciator.

c. Continuous sounding of alarm notification appliances throughout the building.

d. Closure of doors held open by electromagnetic devices.

e. Deactivation of the air handling units throughout the building.

1.3.4 Transmitter

The existing base wide fire reporting system is a Monaco Enterprises D700 radio alarm and Computer Aided Dispatch system operating at 141.625 MHz. The Contractor shall provide a Monaco Enterprises BT 2-8 Building Transceiver equipped for 16 zones and all required interfaces for the Fire Alarm Control panel provided under this specification. Substitutions will not be accepted.

1.3.5 Primary Power

Operating power shall be provided as required by paragraph Power Supply for the System. Transfer from normal to emergency power or restoration from emergency to normal power shall be fully automatic and not cause transmission of a false alarm. Loss of ac power shall not prevent transmission of a signal via the fire reporting system upon operation of any initiating circuit.

1.3.6 Battery Backup Power

Battery backup power shall be through use of rechargeable, sealed-type storage batteries and battery charger.

1.4 SUBMITTALS

Government approval is required for submittals with a "GA" designation; submittals having an "FI0" designation are for information only. The following shall be submitted in accordance with Section 01330 SUBMITTAL PROCEDURES:

SD-01 Data

Battery; GA.

Substantiating battery calculations for supervisory and alarm power requirements. Ampere-hour requirements for each system component and each panel component, and the battery recharging period shall be included.

Voltage Drop; GA.

Voltage drop calculations for signaling appliance circuits to indicate that sufficient voltage is available for proper appliance operation.

Spare Parts; GA.

Spare parts data for each different item of material and equipment specified, not later than 2 months prior to the date of beneficial occupancy. Data shall include a complete list of parts and supplies with the current unit prices and source of supply and a list of the parts recommended by the manufacturer to be replaced after 1 year of service.

Qualifications; GA.

Qualifications, with verification of experience and license number, of a Registered Professional Engineer with at least 4 years of current experience in the design of the fire protection and detection systems. This engineer

must perform the various specification items required by this section to be performed by a registered Professional Engineer.

SD-04 Drawings

Fire Alarm Reporting System; GA.

Detail drawings, signed by the Registered Professional Engineer, consisting of a complete list of equipment and material, including manufacturer's descriptive and technical literature, catalog cuts, and installation instructions. Note that the contract drawings show layouts based on typical detectors. The contractor shall check the layout based on the actual detectors to be installed and make any necessary revisions in the detail drawings. The detail drawings shall also contain complete wiring and schematic diagrams for the equipment furnished, equipment layout, and any other details required to demonstrate that the system has been coordinated and will properly function as a unit.

Detailed point-to-point wiring diagram, signed by the Registered Professional Engineer, showing all points of connection. Diagram shall include connections between system devices, appliances, control panels, supervised devices, and all equipment that is activated or controlled by the panel.

SD-06 Instructions

Draft Copy - Operating and Maintenance Manual; FIO.

A draft copy of the Operating and Maintenance Manual containing instructional and maintenance procedures shall be furnished 21 days prior to the final acceptance test. The draft O&M Manual shall include as a minimum:

a. All information supplied in Initial Submittal Documentation.

b. Updated as-built drawings reflecting modifications and corrections made during installation. As-built drawings shall include manufacturer's part numbers and a spare parts list.

c. Owners manual and manufacturer's installation instructions covering all equipment.

d. Maintenance/service manual for all system equipment.

e. A hardcopy of software programming installed in the panel at this facility.

Operating and Maintenance Manuals; GA.

Five (5) copies of the Final Operating and Maintenance Manuals consisting of the Owner's Manual, Maintenance/Service Manual, and Drawings shall be furnished fifteen (15) days after the acceptance test. The final copies of the Operation and Maintenance Manuals shall include all final modifications and corrections accomplished during testing, including test results, and as noted from the draft Operation and Maintenance Manual. One set of the final drawings shall be original tracings on 24" x 36" reproducible vellum tracing paper, using a 1/8" = 1'0" minimum scale, single or double line building

floor plan. Titles shall be "Fire Alarm System, Building." The Operating and Maintenance Manual shall include:

The Owner's Manual and Manufacturer's Installation Instructions shall include:

a. A detailed narrative description of the system inputs, evacuation signaling, ancillary functions, annunciation, intended sequence of operations, expansion capability, application considerations, and limitations.

b. Operator instructions for basic system operations including alarm acknowledgment, system reset, interpreting system output (LED's, CRT display, and printout), operation of manual evacuation signaling, and ancillary function controls, changing printer paper, etc.

c. A detailed description of routine maintenance and testing as required and recommended and as would be provided under a maintenance contract, including testing and maintenance instructions for each type of device installed. This information should include:

   (1) A listing of the individual system components that require periodic testing and maintenance.

   (2) Step by step instructions detailing the requisite testing and maintenance procedures and the interval at which those procedures should be performed, for each type of device installed.

   (3) A schedule that correlates the testing and maintenance procedures required by paragraph (b) above with the listing required by paragraph (a) above.

d. Detailed troubleshooting instructions for each specific type of trouble condition recognized by the system, including opens, grounds, parity errors, "loop failures," etc. These instructions should include a list of all trouble signals annunciated by the system, a description of the condition(s) that will cause those trouble signals, and step-by-step instructions describing how to isolate those problems and correct them (or call for service, as appropriate).

e. A service directory, including a list of names and telephone numbers for those who should be called to obtain service on the system.

A Maintenance/Service Manual containing complete electrical/electronic schematics of devices, control units/fire alarm panels and sub-components, including individual parts breakdown and identification, shall be provided. A complete technical description and theory of operation for the control unit shall be provided, including programming details, PROM data files, and software descriptions. Include spare parts data for each different item of material and equipment specified. The data shall include a complete list of parts and supplies with current unit prices and source of supply, a list of supplies that are either normally furnished at no extra cost with the purchase of equipment, or specified to be furnished, and a list of

additional items recommended by the manufacturer to assure efficient operation for a period of 365 days. The Final Operating and Maintenance Manual's material shall be indexed (including a cross reference between Submittal documentation and Specifications) and laid out as follows:

a. Hardware Descriptive Section:

(1) Provide a detailed narrative description of the system inputs, evacuation signaling, ancillary functions, annunciation, intended sequence of operations, expansion capability, application considerations, and limitations, including battery sizing calculations.

(2) Provide Operator instructions for basic system operations including alarm acknowledgment, system reset, interpreting system output (LED's, CRT display, and printout), operation of manual evacuation signaling, and ancillary function controls, changing printer paper, etc.

(3) Provide a detailed description of routine maintenance and testing as required and recommended and as would be provided under a maintenance contract, including testing and maintenance instructions for each type of device installed. This information should include:

(a) Installation and checkout procedures.

(b) Alignment and calibration procedures.

(c) Inspection, periodic preventative maintenance, fault diagnosis, and repair or replacement of defective components.

(4) Provide a service directory, including a list of names and telephone numbers for those who should be called to obtain service on the system.

b. Software Descriptive Section:

(1) Provide software flow diagram in hard copy indicating each point's functions, ranges, and projected programs to be applied.

(2) Parameter schedules and sequence definitions.

(3) Points projected for specific alarm or information messages. Including programming details, PROM data files, and software.

(4) Any Control Unit/Fire Alarm panel or module equipped with EPROM's or other memory device which requires reprogramming for any changes to the system, will include all documentation, programming equipment, and training necessary for authorized base personnel to make those changes, perform maintenance, and reconfigure the Fire Alarm panel.

Drawings shall show, by identified symbols, all fire alarm components (control panel, audio-visual alarms, pull stations, initiating/indicating devices, etc.) and all wiring, including number, size, and location of

conductors, color coding of conductors and all wiring junctions. Drawings shall contain the following elements:

(1) The floor layout will show the general layout of the facility and indicate locations of all Fire Alarm system components, auxiliary and supplementary circuits or systems devices supplied in other specification sections. Symbols utilized to depict control units, devices, and equipment shall comply with NFPA 170. The As-Built Drawings shall indicate conduit and wire routing from the Control Unit/Fire Alarm Panel to all devices and equipment connected to that panel. The As-Built drawings shall also indicate the sensitivity readings, obtained during the acceptance test, of all smoke detectors. Through annotation next to each detector, or through a tabular listing, sensitivity and detector shall be clearly associated.

(2) Diagrams shall include the following:

(a) A Riser Diagram will show the number of zones (initiating and indicating), the number and type of devices in each zone, auxiliary and supplementary circuits, system's devices supplied in other specification sections and connected to an initiating zone(s), and will indicate their function, and the Central Station connection. On either the floor layout or riser diagram, the wiring sequence of device connected to the circuit shall be shown.

(b) The Control Unit/Fire Alarm Panel layout will show the location of all panel-mounted devices (Modules, Relays, etc.) associated terminal blocks or strips. The terminal-block/strips will show all wiring and specific terminal function (indication, initiation, auxiliary, and supplementary), and the locations of spare terminals, and unassigned spaces. Jumpers, Strapping, DIP switch settings, ERPOM data, and/or information of this nature necessary to insure panel operation shall be shown. Wire identification will be shown on each terminal-block/strip.

(3) A detailed sequence of operation will be provided to describe initiation and indication loop operation including auxiliary, supplementary, and Fire Department notification.

(4) One set of the final drawings shall be original tracings on 24" x 36" reproducible vellum tracing paper, using a 1/8" = 1'0" minimum scale, single or double line building floor plan. Titles shall be "Fire Alarm System, Building."

One set of the Final Operating and Maintenance Manual, with drawings shall be on 3.5" disk, MS-DOS formatted. The Operating and Maintenance Manual text, on the 3.5" disk, shall utilize Word for Windows, Version 6.0. Drawings on the 3.5" disk shall utilize Autocad 13.

One set of software on EPROM.

Training; GA.

Lesson plans and training data, in manual format, for the training courses.

SD-08 Statements

Test Procedures; GA.

Detailed test procedures, signed by the Registered Professional Engineer, for the fire detection and alarm system 60 days prior to performing system tests.

SD-09 Reports

Testing; GA.

Test reports in booklet form showing all field tests performed to prove compliance with the specified performance criteria, upon completion and testing of the installed system. Each test report shall document all readings, test results and indicate the final position of controls.

SD-13 Certificates

Equipment; FIO.

Certified copies of current approvals or listings issued by UL, FM or other nationally recognized testing laboratory, showing compliance with specified NFPA standards.

Installer; FIO.

The Contractor shall provide documentation demonstrating that its fire detection and alarm system installer has been regularly engaged in the installation of fire detection and alarm systems meeting NFPA standards for a minimum of three years immediately preceding commencement of this contract. Such documentation shall specifically include proof of satisfactory performance on at least three projects similar to that required by these specifications, including the names and telephone numbers of using agency points of contact for each of these projects. Documentation shall indicate the type of each system installed and include a written certificate that each system has performed satisfactorily in the manner specified for a period of not less than 12 months following completion. All such data shall be submitted 30 days prior to commencement of installation for approval of the Contracting Officer. Listing of the installer under "Protective Signaling Services - Local, Auxiliary, Remote Station Proprietary (UUJS)" of UL-04 shall be accepted as equivalent proof of compliance with the foregoing experience requirements.

1.5 DELIVERY AND STORAGE

All equipment delivered and placed in storage shall be stored with protection from the weather, humidity and temperature variation, dirt and dust, and any other contaminants.

2 PRODUCTS

2.1 RADIO ALARM TRANSMISSION EQUIPMENT

The existing base wide fire reporting system is a Monaco Enterprises D700 radio alarm and Computer Aided Dispatch system operating at 141.625 MHz.

2.1.1 Transceivers

The transceiver shall be a 16 zone BT 2-8 radio transmitting/receiving unit with backup battery and arranged for 120 VAC operation. Provide all interface equipment required for connection to the Fire Alarm Control Panel and transmission of zone alarm information.

2.1.2 Antenna and Associated Equipment

The antenna shall be a VHF omnidirectional type BSA-1 cut for 141 MHZ and equipped with wall mount brackets, coaxial cable, lightning arrestor and grounding as in accordance to the manufacturer's requirements.

2.2 CONTROL PANEL

Control Panel shall comply with all the applicable requirements of UL 864. Panel shall be modular, installed in a flush mounted steel cabinet with hinged door and cylinder lock. Control panel shall be a clean, uncluttered, and orderly assembled panel containing all components and equipment required to provide the specified operating and supervisory functions of the system. The panel shall have prominent rigid plastic, phenolic or metal identification plates for all lamps, zones, controls, meters, fuses, and switches. Nameplates for fuses shall also include ampere rating. Separate alarm and trouble lamp shall be provided for each zone alarm located on exterior of cabinet door or be visible through the cabinet door. Control panel switches shall be within the locked cabinet. A suitable means shall be provided for testing the control panel visual indicating devices (meters or lamps). Meters and lamps shall be plainly visible when the cabinet door is closed. Signals shall be provided to indicate by zone any alarm, supervisory or trouble condition on the system. Each SLC initiating circuit shall be powered and supervised so that a signal on one zone does not prevent the receipt of signals from other zones. Loss of power, including any or all batteries, shall not require the reloading of a program. Upon restoration of power, startup shall be automatic, and shall not require any manual operation. The loss of primary power or the sequence of applying primary or emergency power shall not affect the transmission of alarm, supervisory or trouble signals.

2.2.1 Visual Annunciators

Visual annunciators shall be provided for each active zone and spare zone. Spare zones shall be provided as shown on the drawing. Each lamp shall provide specific identification of the zone by means of a permanently attached rigid plastic, phenolic or metal sign with either raised or engraved letters. Zone identification shall consist of word description of the zone.

2.2.2 Cabinets

Cabinets shall be provided with ample gutter space to allow proper clearance between the cabinet and live parts of the panel equipment. If more than one modular unit is required to form a control panel, the units shall be installed in a single cabinet large enough to accommodate all units. Cabinets shall be painted red.

2.2.3 Remote System Trouble Audible/Visual Appliance

Audible appliance shall have a minimum sound level output rating of 85 dBA at 10 feet and operate in conjunction with the panel's integral trouble signal. The audible device shall be silenced by the system trouble silence switch. A rigid plastic, phenolic or metal identification sign which reads "Fire Alarm System Trouble" shall be provided at the audible appliance. The visual appliance located with the audible appliance shall not be extinguished until the trouble has been cleared.

2.2.4 Circuit Connections

Circuit conductors entering or leaving the panel shall be connected to screw-type terminals with each terminal marked for identification.

2.3 STORAGE BATTERIES

Storage Batteries shall be provided and shall be the sealed, lead-calcium type requiring no additional water. The batteries shall have ample capacity, with primary power disconnected, to operate the fire alarm system for a period of 48 hours. Following this period of operation via batteries, the batteries shall have ample capacity to operate all components of the system, including all alarm signaling devices in the total alarm mode for a minimum period of 15 minutes. Batteries shall be sized to deliver 50 percent more ampere/hours based on a 48 hour discharged rate than required for the calculated capacities. Battery cabinet shall be a separate compartment within the control panel. Batteries in the control panel shall be located at the bottom of the panel. Battery shall be provided with overcurrent protection in accordance with NFPA 72.

2.4 BATTERY CHARGER

Battery charger shall be completely automatic, with high/low charging rate, capable of restoring the batteries from full discharge to full charge within 12 hours. A separate ammeter shall be provided for indicating rate of charge. A separate voltmeter shall be provided to indicate the state of the battery charge. A pilot light indicating when batteries are manually placed on a high rate of charge shall be provided as part of the unit assembly if a high rate switch is provided. Charger shall be located in control panel or battery cabinet.

2.5 MANUAL FIRE ALARM STATIONS

Manual fire alarm stations shall conform to the applicable requirements of UL 38. Manual stations shall be connected into alarm-initiating circuits. Stations shall be installed on semi-flush mounted outlet boxes. Stations shall be double action type. Stations shall be finished in red, with raised letter operating instructions of contrasting color. Stations requiring the breaking of glass or plastic panels for operation are not acceptable. Stations employing glass rods are not acceptable. The use of a key or wrench shall be required to reset the station. Gravity or mercury switches are not acceptable. Switches and contacts shall be rated for the voltage and current upon which they operate. Stations shall have a separate screw terminal for each conductor. Surface mounted boxes shall be painted the same color as the fire alarm manual stations. Addressable pull stations shall be capable of being field programmed, shall latch upon operation and remain latched until manually reset.

2.6 ADDRESSABLE FIRE DETECTING DEVICES

Addressable fire detecting devices shall comply with the applicable requirements of NFPA 72, NFPA 90A, UL 268, and UL 521. The detectors shall be provided as indicated. Detector base shall have screw terminals for making connections. No solder connections will be allowed. Detectors shall be connected into alarm initiating circuits. Detectors located in concealed locations (above ceiling, etc.) shall have a remote visible indicator lamp. Installed devices shall conform to the classification of the area. Addressable fire detecting devices shall be dynamically supervised and uniquely identified in the control panel.

2.6.1 Heat Detectors

Heat detectors shall be designed for detection of fire by combination fixed temperature and rate-of-rise principle. Heat detectors shall be rated for a minimum of 50 foot spacing (smooth-ceiling rated) in accordance with UL 521. Detectors located in areas subject to moisture, exterior atmospheric conditions or hazardous locations as defined by NFPA 70, shall be types approved for such locations.

2.6.1.1 Combination Fixed-Temperature and Rate-of-Rise Detectors

Detectors shall be designed for semi-flush outlet box mounting and supported independently of wiring connections. Contacts shall be self-resetting after response to rate-of-rise principle. Under fixed temperature actuation, the detector shall have a permanent external indication which is readily visible. Detector units located in boiler rooms, showers, or other areas subject to abnormal temperature changes shall operate on fixed temperature principle only. Rating for fixed temperature portion shall be 135 degrees F in temperature conditioned spaces.

2.6.2 Smoke Detectors

Detectors shall be designed for detection of abnormal smoke densities. Smoke detectors shall be photoelectric type. Detectors shall contain a visible indicator lamp that shows when the unit is in alarm condition. Detectors shall not be adversely affected by vibration or pressure. Detectors shall be the plug-in type in which the detector base contains terminals for making all wiring connections. Detectors that are in concealed (above false ceilings, etc.) locations shall have a remote visible indicator lamp.

2.6.2.1 Photoelectric Detectors

Detectors shall operate on a light scattering concept using an LED light source. Failure of the LED shall not cause an alarm condition. Detectors shall be factory set for sensitivity and shall require no field adjustments of any kind. Detectors shall have an obscuration rating between 1.9 and 2.4 percent per foot when tested in accordance with UL 268.

2.6.2.2 Air Duct Smoke Detectors

Shall be sampling photoelectric type for sensing of products of combustion within the air stream of ducted fan systems. The devices shall include necessary sampling tube extensions and sensitivity adjustments for detection

of products of combustion across the width of the duct. The device shall actuate upon nominal 3 percent light obscuration per foot. Visual indication of normal and alarm/trouble shall be incorporated into the exposed surface of the device.

2.7 NOTIFICATION APPLIANCES

Audible appliances shall be heavy duty and conform to the applicable requirements of UL 464. Devices shall be connected into alarm indicating circuits and shall have a separate screw terminal for each conductor. Devices shall be white with red letters ("FIRE").

2.7.1 Alarm Horns

Horns shall be surface mounted, with the matching mounting back box recessed double projector, vibrating type suitable for use in an electrically supervised circuit. Horns shall produce a minimum sound rating of at least 95 dBA at 10 feet. Horns used in exterior locations shall be specifically listed or approved for outdoor use and be provided with metal housing and protective grills.

2.7.2 Visual Notification Appliances

Visual notification appliances shall have high intensity optic lens and flash tubes. Strobes shall flash at approximately 1 flash per second and a minimum of 1 candela (8,000 peak candle power). Strobe shall be semi-flush mounted.

2.7.3 Combination Audible/Visual Notification Appliances

Combination audible/visual notification appliances shall provide the same requirements as individual units except they shall mount as a unit in standard backboxes. All units shall be factory assembled. Any other audible indicating appliance employed in the fire alarm systems shall be approved by the authority having jurisdiction.

2.8 REMOTE ANNUNCIATION EQUIPMENT

2.8.1 Remote Graphic Annunciator

Graphic annunciator shall have a plan view of each floor. Each fire detecting device shall be indicated by an LED lamp shown in its relative position in the building. One individual lamp shall be provided for each device and shall illuminate for an abnormal condition at that device. Lamps shall be red. Plan views shall be approximately to scale and in no case smaller than 15 inches in length or width. Annunciator shall have a door with piano hinge and two point cylinder lock or two cylinder locks. Lock shall be operable using the same key as the control panel. Annunciator shall contain a lamp test switch, audible trouble signal, and a trouble switch to silence the audible alarm, but not extinguish the trouble lamp. Annunciator shall be flush mounted.

2.9 FIRE DETECTION AND ALARM SYSTEM PERIPHERAL EQUIPMENT

2.9.1 Ground Rods

Ground rods shall be of copper clad steel conforming to UL 467 not less than 5/8 inch in diameter by 10 feet in length.

2.9.2 Conduit

Conduit and fittings shall comply with UL 6, UL 1242 and UL 797.

2.9.3 Wiring

Wiring for 120V ac power shall be No. 12 AWG minimum. Wiring for low voltage dc circuits shall be No. 16 AWG minimum or as specified by the Fire Alarm System manufacturer. Power wiring (over 28 volts) and control wiring shall be isolated. All wiring shall conform to NFPA 70. System field wiring shall be solid copper and installed in metallic conduit or electrical metallic tubing, except rigid plastic conduit may be used under slab-on-grade. All conductors shall be color coded. Conductors used for the same functions shall be similarly color coded. Wiring code color shall remain uniform throughout the circuit. Pigtail or T-tap connections to alarm initiating, supervisory circuits, and alarm indicating circuits are prohibited. T-tapping using screw terminal blocks is allowed for addressable systems.

2.9.4 Special Tools and Spare Parts

Special tools necessary for the maintenance of the equipment shall be furnished. Two spare fuses of each type and size required and five spare lamps and LED's of each type shall be furnished. Two percent of the total number of each different type of detector, but no less than two each, shall be furnished. Fuses and lamps shall be mounted in the fire alarm panel.

2.10 LOCKS

Provide locks for fire alarm control panel, graphic annunciator, transceiver and related panels and cabinets. Locks shall have Cat 30 key ways and shall be keyed alike.

3 EXECUTION

3.1 INSTALLATION

All work shall be installed as shown and in accordance with the manufacturer's diagrams and recommendations, unless otherwise specified.

3.1.1 Power Supply for the System

A single dedicated circuit connection for supplying power to each building fire alarm system shall be provided. The primary power shall be supplied as shown on the drawings. The power supply shall be equipped with a locking mechanism and marked "FIRE ALARM CIRCUIT CONTROL".

3.1.2 Wiring

Conduit size for wiring shall be in accordance with NFPA 70. Wiring for the fire alarm system shall not be installed in conduits, junction boxes, or outlet boxes with conductors of lighting and power systems. No more than one conductor shall be installed under any screw terminal. All circuit conductors entering or leaving any mounting box, outlet box enclosure or cabinet shall be connected to screw terminals with each terminal marked in accordance with the wiring diagram. Connections and splices shall be made using screw terminal blocks. The use of wire nut type connectors are prohibited in the system. Wiring within any control equipment shall be readily accessible without removing any component parts. The fire alarm equipment manufacturer's representative shall be present for the connection of wiring to the control panel.

3.1.3 Control Panel

The control panel and its assorted components shall be mounted so that no part of the enclosing cabinet is less than 12 inches nor more than 78 inches above the finished floor. All manually operable controls shall be between 36 inches to 42 inches above the finished floor. Panel shall be installed to comply with the requirements of UL 864.

3.1.4 Detectors

Detectors shall be installed in accordance with NFPA 72. Detectors shall be at least 12 inches from any part of any lighting fixture. Detectors shall be located at least 3 feet from diffusers of air handling systems. Each detector shall be provided with appropriate mounting hardware as required by its mounting location. Detectors which mount in free space shall be mounted directly to the end of the stubbed down rigid conduit drop. Conduit drops shall be firmly secured to minimize detector sway. Where length of conduit drop from ceiling or wall surface exceeds 3 feet, sway bracing shall be provided.

3.1.5 Duct Smoke Detectors

Install detectors in mechanical ductwork. Coordinate installation of detectors with sheetmetal installer for mounting; electrically connect and provide remote indicator lights (for duct smoke detectors) where the detector is located above a suspended ceiling or in an area which is not readily accessible. Provide fire alarm relay and connect to shutdown corresponding fan system via fire alarm control panel.

3.1.6 Notification Appliances

Notification appliances shall be mounted a minimum of 8 feetabove the finished floor unless limited by ceiling height or otherwise indicated.

3.1.7 Annunciator Equipment

Annunciator equipment provided shall be mounted where indicated.

3.2 OVERVOLTAGE AND SURGE PROTECTION

All equipment connected to alternating current circuits shall be protected from surges per IEEE C62.41 and NFPA 70. All cables and conductors which

serve as communications links, except fiber optics, shall have surge protection circuits installed at each end. Fuses shall not be used for surge protection.

3.3 GROUNDING

Grounding shall be provided to building ground or ground rods shall be driven. Maximum impedance to ground shall be 25 ohms. Ground rods shall not protrude more than 6 inches above grade.

3.4 TESTING

The Contractor shall notify the Contracting Officer 30 days before the preliminary and acceptance tests are to be conducted. The tests shall be performed in accordance with the approved test procedures in the presence of the Contracting Officer. The control panel manufacturer's representative shall be present to supervise all tests. The Contractor shall furnish all instruments and personnel required for the tests.

3.4.1 Preliminary Tests

Upon completion of the installation, the system shall be subjected to functional and operational performance tests including tests of each installed initiating and notification appliance. Tests shall include the meggering of all system conductors to determine that the system is free from grounded, shorted, or open circuits. The megger test shall be conducted prior to the installation of fire alarm equipment. If deficiencies are found, corrections shall be made and the system shall be retested to assure that it is functional. Submit a functional test report, indicating completion and proper system operation, five (5) days prior to final acceptance test.

3.4.2 Acceptance Test

Testing shall be in accordance with NFPA 72. The recommended tests in NFPA 72 shall be considered mandatory and shall verify that all previous deficiencies have been corrected. The test shall include the following:

a. Test of each function of the control panel.

b. Test of each circuit in both trouble and normal modes.

c. Tests of alarm initiating devices in both normal and trouble conditions.

d. Tests of each control circuit and device.

e. Tests of each alarm notification appliance.

f. Tests of the battery charger and batteries.

g. Complete operational tests under emergency power supply.

h. Visual inspection of all wiring connections.

i. Opening the circuit at each alarm initiating device and notification appliance to test the wiring supervisory feature.

j. Ground fault

k. Short circuit faults

l. Stray voltage

m. Loop resistance

3.5 TRAINING

Training course shall be provided for the operations and maintenance staff. The course shall be conducted in the building where the system is installed or as designated by the Contracting Officer. The training period shall consist of 3 training days (8 hours per day) and shall start after the system is functionally completed but prior to final acceptance tests. The instructions shall cover all of the items contained in the operating and maintenance instructions.

END OF SECTION

SECTION 16770

PAGING SYSTEMS
07/89

1 GENERAL

1.1 REFERENCES

The publications listed below form a part of this specification to the extent referenced. The publications are referred to in the text by basic designation only.

CODE OF FEDERAL REGULATIONS (CFR)

CFR 47 PART 68	Connection of Terminal Equipment to the Telephone Network

ELECTRONIC INDUSTRIES ASSOCIATION (EIA)

EIA 310-D	(1992) Cabinets, Racks, Panels, and Associated Equipment

NATIONAL FIRE PROTECTION ASSOCIATION (NFPA)

NFPA 70	(1996) National Electrical Code

UNDERWRITERS LABORATORIES (UL)

UL 50	(1992; Rev thru Nov 1994) Enclosures for Electrical Equipment

1.2 SYSTEM DESCRIPTION

The paging system shall consist of a four-zone audio distribution network to include amplifiers, speakers, a Four Zone Page Control Interface for connection to a telephone dial up line for single zone or all zone paging by the use of DTMF signaling, cabling, and any ancillary components required for connection and proper system operation.

1.2.1 Single Channel System with Paging

The system shall control and amplify an audio input for distribution within the areas indicated. Components of the system shall include a power amplifier paging controller, speaker system, background music input, cabling, and other associated hardware.

1.2.2 System Performance

The system shall provide even sound distribution throughout the designated area, plus or minus 3 dB for the 1-octave band centered at 4000 Hz. The system shall provide uniform frequency response throughout the designated area, plus or minus 3 dB as measured with 1/3-octave bands of pink noise at locations across the designated area selected by the Contracting Officer. The system shall be capable of delivering 75 dB average program level with

additional 10 dB peaking margin sound pressure level (SPL) to any location in the area at an acoustic distortion level below 5 percent total harmonic distortion (THD). Unless otherwise specified the sound pressure reference level is 20 micro Pascal (0.00002 Newtons per square meter).

1.3 SUBMITTALS

Government approval is required for submittals with a "GA" designation; submittals having an "FIO" designation are for information only. The following shall be submitted in accordance with Section 01330 SUBMITTAL PROCEDURES:

SD-01 Data

Spare Parts; FIO.

Spare parts data for each different item of material and equipment specified, after approval of the detail drawings and not later than 2 months prior to the date of beneficial occupancy. The data shall include a complete list of parts and supplies, with current unit prices and source of supply.

SD-04 Drawings

Paging System; FIO.

Detail drawings consisting of a complete list of equipment and material, including manufacturer's descriptive and technical literature, performance charts and curves, catalog cuts, and installation instructions. Detail drawings shall also contain complete wiring and schematic diagrams and any other details required to demonstrate that the system has been coordinated and will properly function as a unit. Drawings shall show proposed layout of equipment and appurtenances, and equipment relationship to other parts of the work including clearances for maintenance and operation.

SD-09 Reports

Test Plan; GA.

Test plan and test procedures for the acceptance tests. The test plan and test procedures shall explain in detail, step-by-step actions and expected results to demonstrate compliance with the requirements specified. The procedure shall also explain methods for simulating the necessary conditions of operation to demonstrate system performance.

Acceptance Tests; GA.

Test reports in booklet form showing all field tests performed to adjust each component and to prove compliance with the specified performance criteria, upon completion and testing of the installed system. The reports shall include the manufacturer, model number, and serial number of test equipment used in each test. Each report shall indicate the final position of controls and operating mode of the system.

SD-19 Operation and Maintenance Manuals

Paging System; GA.

Six copies of the operation manual outlining the step-by-step procedures required for system start up, operation, and shutdown. The manual shall include equipment layout and schematics of simplified wiring and control diagrams of the system as installed, the manufacturer's name, model number, and brief description of all equipment and their basic operating features. Six copies of maintenance manual listing routine maintenance procedures, possible breakdowns and repairs, and troubleshooting guides. The manual shall include equipment layout and schematics and simplified wiring and control diagrams of the system.

1.4 DELIVERY AND STORAGE

Equipment placed in storage until installation time shall be stored with protection from the weather, humidity and temperature variations, dirt and dust, and other contaminants.

1.5 VERIFICATION OF DIMENSIONS

The Contractor shall become familiar with the details of the work and working conditions, shall verify dimensions in the field, and shall advise the Contracting Officer of any discrepancies before performing the work.

2 PRODUCTS

2.1 STANDARD PRODUCTS

Material and equipment to be provided shall be the standard products of a manufacturer regularly engaged in the manufacture of such products, and shall essentially duplicate material and equipment that have been in satisfactory use at least 2 years. All components used in the system shall be commercial designs that comply with the requirements specified. Equipment shall be supported by a service organization that is, in the opinion of the Contracting Officer, reasonably convenient to the site.

2.1.1 Identical Items

Items of the same classification shall be identical. This requirement includes equipment, modules, assemblies, parts, and components.

2.1.2 Nameplates

Each major component of equipment shall have the manufacturer's name, address, model and catalog number, and serial number on a plate secured to the equipment.

2.2 ZONE PAGE CONTROLLER

The zone page controller input shall terminate a single 600 ohm telephone line conforming to CFR 47 PART 68. The input shall be arranged to drive any or all of four different zones, as selected by standard Dual Tone Multifrequency (DTMF) tones from the touch pad on the telephone used as a paging source. The unit shall have a minimum of four DPDT relays (one per zone), and their outputs shall be capable of switching both amplifier inputs and outputs to the specific zone dialed. Paging shall be automatically terminated upon the detection of dial tone from the line or adjustable from 3 to 30 seconds after the voice activated circuit no longer senses any

input. The unit shall be housed in a wall mounted metal case and powered by 120VAC.

Rated power output:	240 watts RMS
Frequency Response:	Plus or Minus 2 dB, 60 - 13,000 Hz
Distortion:	Less than 2 percent at RPO, 600 - 13,000 Hz
Input Impedance:	50 k ohm unbalanced
Output Impedance:	83.3, 10.4, 8.0, and 4.0 ohms
Output Voltage:	70.7, 25, 22, and 15.5 volts
Power Requirement:	110-125 Vac 60 Hz
Inputs:	Telephone Page Port Background Music Port
Outputs:	Page only and Page plus music

2.3 SPEAKERS

2.3.1 Ceiling Speaker

The speaker shall as a minimum conform to the following specifications:

Application:	Ceiling
Frequency range:	60 to 12,000 Hz
Power Rating:	Normal - 7 watts Peak - 10 watts
Voice Coil Impedance:	8 ohms
Line Matching Transformer Type:	25/70 volt line
Capacity:	2 watts
Magnet:	8 ounces or greater
Primary Taps:	0.5, 1, and 2 watts
Primary Impedance:	25 volts - 1250, 625, and 312 ohms 70 volts - 10k, 5k, and 2.5k ohms
Frequency Response:	30 - 20,000 Hz
Insertion Loss:	Less than 1 dB
Dispersion:	90 degree minimum

Baffle:	Satin Aluminum
Backbox:	Recessed, welded steel enclosure with knockouts
Mounting:	T-bar support designed to support the weight of speaker, backbox, transformer and baffle

2.3.2 Speaker Enclosures

Speaker enclosures shall be compatible with the speaker furnished and shall comply with UL 50.

2.4 SPEAKER CABLE

Cables shall be of the gauge required depending upon the cable run length. In no case shall any cable be used which is smaller than 20 AWG. Insulation on the conductors shall be polyvinyl chloride (PVC) or an equivalent synthetic thermoplastic not less than 0.009 inch. Cables shall be shielded with a 34-gauge tinned soft copper strand formed into a braid. Cables shall be jacketed with a PVC compound. The jacket thickness shall be 0.0200 inch minimum.

2.5 POWER SURGE PROTECTION

Major components of the system such as power amplifiers, mixer-preamplifiers, phonographs, and tuners, shall have a device, whether internal or external, which provides protection against voltage spikes and current surges originating from commercial power sources.

2.6 SIGNAL SURGE PROTECTION

Major components of the system shall have internal protection circuits which protects the component from mismatched loads, direct current, and shorted output lines.

3 EXECUTION

3.1 INSTALLATION

All equipment shall be installed as indicated and specified, and in accordance with the manufacturer's recommendations except where otherwise indicated. Equipment mounted out-of-doors or subject to inclement conditions shall be weatherproofed.

3.1.1 Wiring

Wiring shall be installed in rigid conduit, intermediate metal conduit, cable trays, or electric metallic tubing as specified in Section 16415ELECTRICAL WORK, INTERIOR. Wiring for microphone, grounding, line level, video, speaker and power cables shall be isolated from each other by physical isolation and metallical shielding. Shielding shall be terminated at only one end.

3.2 GROUNDING

All grounding practices shall comply with NFPA 70. The antenna mast shall be separately grounded. The system shall utilize a multiple-point signal grounding scheme where conductive path connections are required between each piece of equipment and the reference ground point. An isolated ground bar for power shall be provided for the connection of the main system components. The ground bar shall be connected to the main service ground utilizing a No. 6 conductor.

3.3 ACCEPTANCE TESTS

After installation has been completed, the Contractor shall conduct acceptance tests, utilizing the approved test procedures, to demonstrate that equipment operates in accordance with specification requirements. The Contractor shall notify the Contracting Officer 10 days prior to the performance of tests. In no case shall notice be given until after the Contractor has received written Contracting Officer approval of the test plans as specified. The acceptance tests shall include originating and receiving messages at specified stations, at proper volume levels, without cross talk or noise from other links or nondesignated units.

3.4 TRAINING

The Contractor shall conduct a training course for 3 members of the operating and maintenance staff as designated by the Contracting Officer. The training course will be given at the installation during normal working hours for a total of 2 hours and shall start after the system is functionally complete but prior to final acceptance tests. The field instructions shall cover all of the items contained in the approved operating and maintenance manuals, as well as demonstrations of routine maintenance operations. The Contracting Officer shall be notified at least 14 days prior to the start of the training course.

END OF SECTION