SOLICITATION, OFFER, AND AWARD (Construction, Alteration, or Repair)	1. SOLICITATION NO. DACA67-00-R-0214	2. TYPE OF SOLICITATION [ ] SEALED BID (IFB) [X] NEGOTIATED (RFP)	3. DATE ISSUED 2000-03-02	PAGE OF PAGES 1 OF 130

IMPORTANT - The "offer" section on the reverse must be fully completed by offeror.

4. CONTRACT NO.	5. REQUISITION/PURCHASE REQUEST NO.	6. PROJECT NO.
DACA67-00-C-0227	W68MD9-9348-3636	NZAS 93-90101C

7. ISSUED BY CODE DACA67	8. ADDRESS OFFER TO (If Other Than Item 7) CODE
USA Engineer District, Seattle ATTN: CENWS-CT P.O. Box 3755 SEATTLE, WA 98124-3755	**See Item 7**

9. FOR INFORMATION CALL:	A. NAME	B. TELEPHONE NUMBER (Include area code)(No Collect Calls)
	PATRICIA J HOLMES	206-764-6588

SOLICITATION

NOTE: In sealed bid solicitations "offer" and "offeror" mean "bid" and "bidder".

10. THE GOVERNMENT REQUIRES PERFORMANCE OF THE WORK DESCRIBED IN THESE DOCUMENTS (Title, identifying number, date):
FY00 DORMITORY MALMSTROM AFB, MT

Furnish all labor, materials and equipment and perform all work to Design Build: FY00 DORMITORY, MALMSTROM AIR FORCE BASE, MONTANA in accordance with the attached Contract Clauses, Special Clauses, Technical Specifications and Drawings.

1. Solicitation No. DACA67-00-R-0214 dated March 2, 2000 with 6 amendments thereto.
2. Wage Determination No MT00005 with 0 modifications thereto.
3. Drawings as listed in Section 00800.
4. Incorporate technical proposal Volumes I &; II submitted 28 April 2000. Incorporated are responses dated May 17, 2000.

NOTE:
Award will be made pursuant to the Small Business Competitive Demonstration Program.

11. The Contractor shall begin performance within 10 calendar days and complete it within 450 calendar days after receiving [ ] award, [X] notice to proceed. This performance period is [ ] mandatory, [ ] negotiable (See Paragraph SC-1 .)

12 A. THE CONTRACTOR MUST FURNISH ANY REQUIRED PERFORMANCE AND PAYMENT BONDS? (If "YES," indicate within how many calendar days after award in item 12B.)	12B. CALENDAR DAYS
[X] YES [ ] NO	10

13. ADDITIONAL SOLICITATION REQUIREMENTS:

A. Sealed offers in original and 2 copies to perform the work required are due at the place specified in Item 8 by 15:00:00 (hour) local time ~~4/28/00~~ 4/28/00 (date). If this is a sealed bid solicitation, offers must be publicly opened at that time. Sealed envelopes containing offers shall be marked to show the offeror's name and address, the solicitation number, and the date and time offers are due.

B. An offer guarantee [X] is, [ ] is not required.

C. All offers are subject to the (1) work requirements, and (2) other provisions and clauses incorporated in the solicitation in full text or by reference.

D. Offers providing less than 90 calendar days for Government acceptance after the date offers are due will not be considered and will be rejected.

OFFER (Must be fully completed by offeror)

14. NAME AND ADDRESS OF OFFEROR (Include ZIP Code)	15. TELEPHONE NO. (Include area code)
ATTN: SWANK ENTERPRISES P.O. BOX 568 VALIER, MT 59486	406-279-3241 FAX: 406-279-3321
	16. REMITTANCE ADDRESS (Include only if different than item 14)
CODE / FACILITY CODE	DUNS #: 045215795 TAX ID#: 81-0302197

SOLICITATION, OFFER, AND AWARD (Continued)

(Construction, Alteration, or Repair)

OFFER (Continued)

17. The offeror agrees to perform the work required at the prices specified below in strict accordance with the terms of this solicitation, if this offer is accepted by the Government in writing within calendar days after the date offers are due. (Insert any number equal to or greater than the minimum requirements stated in Item 13D.) Failure to insert any number means the offeror accepts the minimum in Item 13D.

AMOUNTS: SEE SCHEDULE OF PRICES

18. The offeror agrees to furnish any required performance and payment bonds.

19. ACKNOWLEDGEMENT OF AMENDMENTS

(The offeror acknowledges receipt of amendments to the solicitation - give number and date of each)

AMENDMENT NO.	1	2	3	4	5	6				
DATE	4/5/00	4/6/00	4/13/00	4/18/00	4/24/00	5/9/00				

20A. NAME AND TITLE OF PERSON AUTHORIZED TO SIGN OFFER *(Type or print)*	20B. SIGNATURE	20C. OFFER DATE
JIM LAKE, VICE-PRESIDENT	Jim Lake	4/28/00

AWARD (To be competed by Government)

21. ITEMS ACCEPTED

Line Items 0001 through 0008

22. AMOUNT	23. ACCOUNTING AND APPROPRIATION DATA
$8,871,000	24 May 2000 57 NA 2000 3300.0000 G3 2000 08 8082 32100000000 35026 3200 00358W

24. SUBMIT INVOICES TO ADDRESS SHOWN IN (4 copies unless otherwise specified)	ITEM	25. OTHER THAN FULL AND OPEN COMPETITION PURSUANT TO: ☐ 10 U.S.C. 2304(c) ☐ 41 U.S.C. 253(c)
26. ADMINISTERED BY CODE		27. PAYMENT WILL BE MADE BY CODE

CONTRACTING OFFICER WILL COMPLETE ITEM 28 OR 29 AS APPLICABLE

☐ 28. NEGOTIATED AGREEMENT *(Contractor is required to sign this document and return _____ copies to issuing office.)* Contractor agrees to furnish and deliver all items or perform all work, requisitions identified on this form and any continuation sheets for the consideration stated in this contract. The rights and obligations of the parties to this contract shall be governed by (a) this contract award, (b) the solicitation, and (c) the clauses, representations, certifications, and specifications incorporated by reference in or attached to this contract.

☒ 29. AWARD *(Contractor is not required to sign this document.)* Your offer on this solicitation is hereby accepted as to the items listed. This award consummates the contract, which consists of (a) the Government solicitation and your offer, and (b) this contract award. No further contractual document is necessary.

30A. NAME AND TITLE OF CONTRACTOR OR PERSON AUTHORIZED TO SIGN *(Type or Print)*		31A. NAME OF CONTRACTING OFFICER *(Type or Print)* CHERYL A. ANDERSON	
30B. SIGNATURE	30C. DATE	31B. UNITED STATES OF AMERICA BY Cheryl A Anderson	31C. AWARD DATE 26 May 2000

Submit Invoices as follows:

Submit 3 Copies of Invoice to:

Fairchild Resident Office
USAED, Seattle
PO Box 1929
Airway Heights, WA, 99001

Submit 1 Copies of Invoice to:

Malmstrom AFB Resident Office
Spokane Area Office
USAE, Seattle
PO BOX 1929
Airway Heights WA 99001-1929

This page intentionally blank

CONTRACT NUMBER: DACA67-00-C-0227

IF THE CONTRACTOR IS A CORPORATION OR PARTNERSHIP, THE **APPLICABLE PORTION** OF THE FORM LISTED BELOW MUST BE COMPLETED. IN THE ALTERNATIVE, OTHER EVIDENCE MUST BE SUBMITTED TO SUBSTANTIATE THE AUTHORITY OF THE PERSON SIGNING THE CONTRACT. IF A CORPORATION, **THE SAME OFFICER SHALL NOT EXECUTE BOTH THE CONTRACT AND THE CERTIFICATE.**

CORPORATE CERTIFICATE

I, RENE SWANK, certify that I am the CORPORATE Secretary of the Corporation named as Contractor herein; that JIM LAKE, who signed this contract on behalf of the Contractor was then VICE-PRESIDENT of said corporation; that said contract was duly signed for and on behalf of said corporation by authority of its governing body and is within the scope of its corporate powers.

Rene Swank (Secretary) (CORPORATE SEAL)

AUTHORITY TO BIND PARTNERSHIP

This is to certify that the names, signatures and Social Security Numbers of all partners are listed below and that the person signing the contract has authority actually to bind the partnership pursuant to its partnership agreements. Each of the partners individually has full authority to enter into and execute contractual instruments on behalf of said partnership with the United States of America, except as follows: (state "none" or describe limitations, if any) _____

This authority shall remain in full force and effect until such time as the revocation of authority by any cause whatsoever has been furnished in writing to, and acknowledged by, the Contracting Officer.

(Names, Signatures and Social Security Numbers of all Partners)

NAME	SIGNATURE	SOCIAL SECURITY NO.

This page intentionally blank

SCHEDULE DACA67-00-C-0227

Item No.	Description of Item	Quantity	Unit	Unit Price	Amount
	FY00 144 PERSON DORMITORY MALMSTROM AFB, MONTANA NZAS 93-90101C				
	BASE ITEMS				
0001	Provide all labor, professional services, materials, equipment and transportation necessary for the complete design (including professional oversight services during construction), of FY00 144 Person Dormitory at Malmstrom Air Force Base, Montana, as described herein and as further required to provide for development in accordance with the Contractor's proposed design and construction schedule. No additional design cost will be paid under any other item, regardless if Optional items 0007 and 0008 are awarded or not.	1	JOB	L.S.	$ 480,000
0002	Provide all labor, material, equipment, and transportation necessary for the complete construction and equipping of FY00 144 Person Dormitory at Malmstrom Air Force Base, Montana for the capacity of 120 persons (60 units), including all related site work, landscaping and utility work, as described herein and as further required to provide for development in accordance with the Contractor's proposed design and construction schedule, Except for Base Items 0003 through 0006 and Optional Items 0007 and 0008	1	JOB	L.S	$ 7,506,000
0003	Provide all labor, material, equipment, secure storage and transportation necessary for the Contractor to receive, store, assemble and install/place Government procured items of furniture, fixtures and equipment for FY00 144 Person Dormitory at Malmstrom Air Force Base, Montana for the capacity of 120 persons, as itemized herein.	1	JOB	L.S.	$ 15,000
0004	All Work for As-Built Drawings in Electronic Format as Specified, from Preparation to Final Submittal, for base bid and any option exercised	1	JOB	L.S.	$30,000
0005	All Work for O&M Manuals, as Specified, from Preparation to Final Submittal, for base bid and any option exercised	1	JOB	L.S.	$75,000

This page intentionally blank

Item No.	Description of Item	Quantity	Unit	Unit Price	Amount
	FY00 144 PERSON DORMITORY MALMSTROM AFB, MONTANA NZAS 93-90101C				
0006	All Work for 1354 Data/ Installed Equipment List, as Specified, from Preparation to Final Submittal, for base bid and any option exercised	1	JOB	L.S.	$15,000
	TOTAL BASE ITEMS				$ 8,121,000
	OPTIONAL ITEMS				
0007	Complete construction and equipping of an additional 6 units (12 person), including all associated systems, related site work, utilities and landscaping, and storage, assembly and installation of additional Government furnished items as described under Item 0003, as specified.	1	JOB	L.S.	$ 375,000
0008	Complete construction and equipping of an additional 6 units (12 person), including all associated systems, related site work, utilities and landscaping, and assembly and installation of additional Government furnished items as described under Item 0003, as specified.	1	JOB	L.S	$375,000
	TOTAL OPTIONAL ITEMS				$ 750,000
	TOTAL BASE AND OPTIONAL ITEMS				$ 8,871,000

NOTE: 1. The dollar amounts established for Items 0004, 0005 and 0006 shall not be revised by the bidder.
2. No partial or total payment will be made for Items 0004, 0005 and 0006, until the as-built drawings, the O&M Manuals, and the 1354 Data/ Installed Equipment List are fully approved (A or B action).
3. Optional Item 0008 will be awarded **only** if Optional Item 0007 is awarded.

ATTENTION:

TOTAL AMOUNT OF FUNDS AVAILABLE FOR DESIGN AND CONSTRUCTION $9,235,000

NOTE: THE GOVERNMENT MAY CHOOSE TO EXCEED THIS AMOUNT.

This page intentionally blank

SWANK ENTERPRISE'S SMALL BUSINESS SUBCONTRACTING PLAN FOR SMALL BUSINESS, HUBZONE SMALL BUSINESS, SMALL DISADVANTAGED BUSINESS, & WOMEN-OWNED BUSINESS

April 27, 2000

Contractor: Swank Enterprises
PO Box 568
Valier, MT 59486
Phone No: (406) 279-3241

Project Title: Design Build: FY00 Dormitory, Malmstrom AFB, Montana

Solicitation No: DACA67-00-R-0214

1. In accordance with the contract clauses at 52.219-8 and 52.219-9, Swank Enterprises submits the following Subcontracting Plan for Small, HUBZone Small, Small Disadvantaged, and Women-owned Business Concerns.

2. The following are corresponding dollar values for percentages cited in paragraph 3:

a. Total contract amount is $7,815,000.

b. Total dollars planned to be subcontracted is $5,416,500.

c. Total dollars planned to be subcontracted to small business concerns is $4,604,025.

d. Total dollars planned to be subcontracted to HUBZone small business: $54,000.

e. Total dollars planned to be subcontracted to small disadvantaged business concerns $612,050.

f. Total dollars planned to be subcontracted to small woman-owned business concerns $633,700.

3. The following percentage goals are applicable to the contract awarded under the solicitation cited above.

a. The total estimated percentage of all planned subcontracting to all types of business concerns under this contract is **69.3%**.

b. **Small Business Concerns: 85%** of total planned subcontracting dollars under this contract will go to subcontractors who are small business concerns including 3c., 3d., and 3e.

c. **Small HUBZone Business Concerns: 1.0%** of total planned subcontracting dollars under this contract will go to HUBZone small business contractors at this time. At the time of the solicitation, there are twenty HUBZone contractors registered in Montana. Most do not qualify with trades for a building project. We are planning to use one business maximumly, and hope that others will certify that qualify for work on this project.

d. **Small Disadvantaged Business Concerns: 11.3%** of total planned subcontracting dollars under this contract will go to subcontractors who are small disadvantaged individuals. Note: This percentage **does not** include Women-owned businesses unless they qualify as disadvantaged.

e. **Small Woman-Owned Business Concerns: 11.7%** of total planned subcontracting dollars under this contract will go to subcontractors who are small woman-owned businesses.

4. The principal items or areas we will subcontract under this contract are:
Division 01, architectural engineering; Division 02, excavation and landscape; Division 05, steel; Division 08, Doors & Hardware; Division 09, flooring, painting & vinyl; Division 11, accessories; Division 15, mechanical; Division 16, electrical.

a. Of the items or areas stated in 4; the following are planned to be subcontracted to Small Businesses: Taylor Brothers-architectural engineering; Shumaker Excavating-excavation; M&D Construction-excavation; Hansen Landscape-landscape; Aspen Grove-steel & misc hardware; Boettcher Paint-paint & vinyl; Central Plumbing & Heating-mechanical; Liberty Electric-electrical.

b. Of the items or areas stated in 4; the following are planned to be subcontracted to HUBZone Small Businesses: excavation, M & D Construction.

c. Of the items or areas stated in 4.a; the following are planned to be subcontracted to Small Disadvantaged Businesses: steel & misc hardware, Aspen Grove Distributing.

d. Of the items or areas stated in 4.a; the following are planned to be subcontracted to Small Women-Owned Businesses: landscape, Hansen Landscape; steel & misc hardware, Aspen Grove Distributing.

5. The following describes the methods used to develop the subcontracting goals in paragraph 2:

a. Our subcontracting goals were developed from our proposal including the businesses we have working with us on it.

b. Upon acceptance of our proposal we will mail and e-mail through Pro-Net bid invitations to

small, HUBZone small, small disadvantaged, and women-owned businesses, to complete our needed.

c. Advertise in Builders Exchange bulletins in Billings, Great Falls, Northwest Montana, and Missoula.

d. Accessed SBA's ProNet system, to get list of certified disadvantaged, and HUBZone firms.

e. Obtained Montana DOT's list of disadvantaged and woman-owned small businesses.

f. We use internal lists to solicit subcontractors and suppliers.

6. Indirect costs were not used in establishing subcontracting goals.

7. The following individual will administer Swank Enterprises' Subcontracting Program:

Name: Nina Rapkoch Job Title: Small Business Program Coordinator
Address: PO Box 568, Valier, Montana 59486
Phone No: (406) 279-3241 Fax No: (406) 279-3321

Nina Rapkoch's specific duties with regard to the conduct of Swank Enterprises' Subcontracting Plan will include, but will not be limited to, the following:

a. Developing and maintaining bidders lists of small business, HUBZone small business, small disadvantaged business, and women-owned small business concerns using sources such as the SBA's ProNet (http://pro-net.sba.gov/), Economic Development Centers, US Department of Commerce, National Center for American Indian Enterprise Development, Economic Development Centers, and Local Minority Business Development Centers.

b. Assuring the inclusion of small, HUBZone small, small disadvantaged, and women-owned small business concerns in all solicitations for products or services which they are capable of providing; and ensuring that all solicitations are structured to permit the maximum possible participation by small, HUBZone small, small disadvantaged, and women-owned small business concerns.

c. Establishing and maintaining records of all solicitations and subcontract awards to ensure that the members of the firm who review bidders proposals documents their reasons for selecting or not selecting a bid submitted by a small, HUBZone small, small disadvantaged, or women-owned small business concern, and monitoring the firm's progress towards achievement of its percentaged goals.

d. Preparing and submitting the Subcontracting Report for Individual Contracts (SF 294) and the Summary Subcontract Report (SF 295) in accordance with instructions provided, and coordinating and preparing for all compliance reviews by Federal agencies.

e. Attendance or representation at DOD sponsored training programs in order to develop guidance and training to firm personnel on the policy of the federal government to aid, assist, and counsel small business under this and other government contracts.

f. Conducting or arranging for all other activities necessary to further the intent and attainment of the goals in the Plan to include motivational training of the firm's purchasing personnel, attendance at workshops, seminars and trade fairs conducted by or on behalf of small business and/or HUBZone small and/or small disadvantaged and/or women-owned small business concerns; and general cooperation with members of the small, HUBZone small, small disadvantaged and women-owned small business concerns or their representatives. Specifically, we have participated in a small business workshop, and distributed brochures as outreach to small businesses. We have contacted some of our current minority businesses, mailed certification packets to them, and encouraged them to become certified through SBA, and also have encouraged small businesses to become certified HUBZone small businesses due to their location.

8. The following steps will be taken to ensure that small, HUBZone small, small disadvantaged, and women-owned small business concerns receive notice of and have an equitable opportunity to compete for intended awards of subcontracts and/or purchase orders for the products and/or services describe in paragraph 4 above:

a. Sources will be requested through SBA's ProNet system, business development organizations, minority and small trade associations, and at small, HUBZone small, minority and women-owned small business procurement conferences; sources will be contacted; and bidding materials will be provided to all responding parties expressing an interest.

b. Internally, motivational training will be conducted to guide and encourage purchasing personnel; source lists and guides to small, HUBZone small, small disadvantaged, and women-owned small business concerns will be maintained and utilized by purchasing personnel while soliciting subcontracts and purchase orders; activities will be monitored to ensure sufficient time is allowed for interested bidders to prepare their proposals and to evaluate continuing compliance with the Subcontracting Plan.

9. Swank Enterprises agrees that the clause entitled "Utilization of Small Business Concerns" (Jan 1999) will be included in all subcontracts that offer further subcontracting opportunities. All subcontractors, except small business concerns, who receive subcontracts in excess of $1,000,000 will be required to adopt a plan similar to this one. Such plans will be reviewed to assure that all minimum requirements of an acceptable subcontracting plan have been satisfied.

The acceptability of percentaged goals shall be determined on a case-by-case basis depending on the supplies/services involved, the availability of potential small, HUBZone small, small disadvantaged, and women-owned subcontractors, and prior experience. Once approved and implemented, plans will be monitored through the submission of periodic reports, or as time and

availability of funds permit, periodic visits to subcontractors facilities to review applicable records and subcontracting program progress.

10. Swank Enterprises agrees to submit periodic reports and cooperate in any studies or surveys as may be required by the Contracting Agency or Small Business Administration in order to determine the extent of compliance by the offeror with the subcontracting plan and with the clause entitled "Utilization of Small Business Concerns" contained in the contract.

11. Swank Enterprises agrees to maintain at least the following types of records to document compliance with the Subcontracting Plan:

a. The names of all organizations, agencies, and associations contacted for small, HUBZone small, small disadvantaged, and women-owned small business sources, along with records of attendance at conference, seminars, and trade fairs where additional sources were developed.

b. Source lists, guides, and other data identifying small, HUBZone small, small disadvantaged, and women-owned small business subcontractors and vendors.

c. Records on all subcontract solicitations resulting in an award of more than $100,000 on a contract-by-contract basis, indicating (1) whether small business concerns were solicited, and if not, why not; (2) whether HUBZone small business were solicitated, and if not, why not; (3) whether small disadvantaged business concerns were solicited, and if not, why not; (4) whether small women-owned business concerns were solicited, and if not, why not; and (5) reasons for the failure of solicited small, HUBZone small, small disadvantaged or women-owned small business concerns to receive a subcontract award.

d. Records of all subcontract award data to include subcontractor's name and address, to be kept on a contract-by-contract basis.

e. Minutes of internal motivational meetings held for guidance and encouragement of purchasing personnel, and records of all monitoring activities performed for compliance evaluation.

f. Copies of SF 294 and SF 295 showing date and place of filing and copies of all other reports or results of reviews conducted by the contracting agency or other interested agencies of the Federal government to monitor our compliance with this Subcontracting Plan.

12. Swank Enterprises will submit a SF 295, Summary Subcontract Report, on Corps of Engineers projects only. The SF 295 shall be completed and distributed in accordance with the Corps of Engineers Supplemental Instructions. Swank Enterprises will not report Corps of Engineers projects through any other Agency unless authorized by the Contracting Officer.

13. In closing, Swank Enterprises states that it will be the policy of Swank Enterprises to afford every practicable opportunity for small, HUBZone small, small disadvantaged, and women-owned

small business concerns to participate in contracts awarded to Swank Enterprises by the Federal Government, to ensure that equitable opportunity is provided to small, HUBZone small, small disadvantaged, and women-owned small business concerns to compete for award of subcontractors and purchase orders, and to diligently pursue the achievement of our goals of participation by small, HUBZone small, small disadvantaged, and women-owned small businesses in the dollars available for subcontract/purchase order awards under this contract.

BY: Jim Lake DATE: 4-27-00

Jim Lake, Vice President
Swank Enterprises

Date: April 27, 2000

	Dollars	Percentage
1. Option #0007 total:	$ 350,000.	100%
2. Total to be subcontracted to all types of businesses:	$ 231,000.	66%
a. Subcontracted to Small Business (Including b, c, & d. below):	$ 207,900.	90%
b. Subcontracted to HUBZone Small Businesses:	$ 1,100.	0.5%
c. Subcontracted to Small Disadvantaged Businesses:	$ 25,000.	10.8%
d. Subcontracted to Women-Owned Small Businesses:	$ 26,565.	11.5%

Date: April 27, 2000

	Dollars	Percentage
1. Option #0008 total:	$ 350,000.	100%
2. Total to be subcontracted to all types of businesses:	$ 231,000.	66%
a. Subcontracted to Small Business (Including b, c, & d. below):	$ 207,900.	90%
b. Subcontracted to HUBZone Small Businesses:	$ 1,100.	0.5%
c. Subcontracted to Small Disadvantaged Businesses:	$ 25,000.	10.8%
d. Subcontracted to Women-Owned Small Businesses:	$ 26,565.	11.5%

To whom it may concern:

We have been trying to solicit HUBZone businesses by using Pro-Net, and we have even been encouraging businesses that should be qualified by location to become a HUBZone business to do so. At the time of this solicitation we did not receive any HUBZone business quotations.

We will, however, continue to try to locate and utilize HUBZone businesses as we can, to help meet our goals, and to also promote small underutilized businesses.

Percentage of work by firm, based on TOTAL Contract			
FIRM NAME	Project Trade	Business Status	% of Work to be Performed by Firm
Swank Enterprises	Prime Contractor	LB	26%
Shumaker Trucking	Excavation	SB	8%
Central Plumbing &Heating	Mechanical	SB	21%
Aspen Grove Distributing	Steel & Hardware	SWOB & SDB	7%
Liberty Electric	Electrical	SB	13%
Hansen Landscape	Landscape	SWOB	5%
Pierce Flooring	Flooring	LB	5%
M & D Construction	Excavation	HUB	0.5%
Taylor Brothers	Architectural Eng	SB	5%
Boettcher Paint	Paint & Vinyl	SB	5%
Unnamed Miscellaneous			4.5%

AMENDMENT OF SOLICITATION/MODIFICATION OF CONTRACT

1. CONTRACT ID CODE	PAGE OF PAGES	
J	1	2

2. AMENDMENT/MODIFICATION NO.	3. EFFECTIVE DATE	4. REQUISITION/PURCHASE REQ. NO.	5. PROJECT NO.(If applicable)
0006	09-May-2000	W68MD9-9348-3636	

6. ISSUED BY CODE DACA67
USA ENGINEER DISTRICT, SEATTLE
ATTN: CENWS-CT
P.O. BOX 3755

SEATTLE, WA 98124-3755

7. ADMINISTERED BY (If other than item 6) CODE

See Item 6

8. NAME AND ADDRESS OF CONTRACTOR (No., Street, County, State and Zip Code)

CODE FACILITY CODE

X	9A. AMENDMENT OF SOLICITATION NO. DACA67-00-R-0214
X	9B. DATED (SEE ITEM 11) 02-Mar-2000
	10A. MOD. OF CONTRACT/ORDER NO.
	10B. DATED (SEE ITEM 13)

11. THIS ITEM ONLY APPLIES TO AMENDMENTS OF SOLICITATIONS

[X] The above numbered solicitation is amended as set forth in Item 14. The hour and date specified for receipt of Offer [ ] is extended, [X] is not extended.

Offers must acknowledge receipt of this amendment prior to the hour and date specified in the solicitation or as amended by one of the following methods: (a) By completing Items 8 and 15, and returning _____ copies of the document; (b) By acknowledging receipt of this amendment on each copy of the offer submitted; or (c) By separate letter or telegram which includes a reference to the solicitation and amendment numbers. FAILURE OF YOUR ACKNOWLEDGMENT TO BE RECEIVED AT THE PLACE DESIGNATED FOR THE RECEIPT OF OFFERS PRIOR TO THE HOUR AND DATE SPECIFIED MAY RESULT IN THE REJECTION OF YOUR OFFER. If by virtue of this amendment you desire to change an offer already submitted, such change may be made by telegram or letter, provided each telegram or letter makes reference to the solicitation and this amendment, and is received prior to the opening hour and date specified.

12. ACCOUNTING AND APPROPRIATION DATA (If required)

13. THIS ITEM APPLIES ONLY TO MODIFICATIONS OF CONTRACTS/ORDERS.
IT MODIFIES THE CONTRACT/ORDER NO. AS DESCRIBED IN ITEM 14.

[ ] A. THIS CHANGE ORDER IS ISSUED PURSUANT TO: (Specify authority) THE CHANGES SET FORTH IN ITEM 14 ARE MADE IN THE CONTRACT ORDER NO. IN ITEM 10A.

[ ] B. THE ABOVE NUMBERED CONTRACT/ORDER IS MODIFIED TO REFLECT THE ADMINISTRATIVE CHANGES (such as changes in paying office, appropriation date, etc.) SET FORTH IN ITEM 14, PURSUANT TO THE AUTHORITY OF FAR 43.103(B).

[ ] C. THIS SUPPLEMENTAL AGREEMENT IS ENTERED INTO PURSUANT TO AUTHORITY OF:

[ ] D. OTHER (Specify type of modification and authority)

E. IMPORTANT: Contractor [ ] is not, [ ] is required to sign this document and return _____ copies to the issuing office.

14. DESCRIPTION OF AMENDMENT/MODIFICATION (Organized by UCF section headings, including solicitation/contract subject matter where feasible.)

Design-Build: FY00 Dormitory; Malmstrom AFB, MT

SEE ATTACHED CONTINUATION SHEET

Except as provided herein, all terms and conditions of the document referenced in Item 9A or 10A, as heretofore changed, remains unchanged and in full force and effect.

15A. NAME AND TITLE OF SIGNER (Type or print)		16A. NAME AND TITLE OF CONTRACTING OFFICER (Type or print) PATRICIA J HOLMES / CONTRACT SPECIALIST	
15B. CONTRACTOR/OFFEROR (Signature of person authorized to sign)	15C. DATE SIGNED	16B. UNITED STATES OF AMERICA BY (Signature of Contracting Officer)	16C. DATE SIGNED 09-May-2000

DATA FOR STANDARD FORM 30
AMENDMENT OF SOLICITATION/MODIFICATION OF CONTRACT

Paragraph NOs. match FORM 30 NOs.

2. AMENDMENT NO.: SIX (0006)_

9A. AMENDMENT OF SOLICITATION NO.: DACA67-00-R-0214

9B. DATED (SEE ITEM 11) : 2 March, 2000

11. BID OPENING IS EXTENDED _____ IS NOT EXTENDED ___X____

14. DESCRIPTION OF AMENDMENT/MODIFICATION :

A. This amendment provides for the following changes:

Modification to specification section 00860- Part II to require fin-tube heaters in the living module bedrooms. Entire revised specification is issued by this amendment.

B. The attached revised specification supersede the existing specification.

C. Proposal due time and date remain unchanged, …….P.M., LOCAL TIME, 28 April, 2000.

D. NOTICE TO OFFERORS: Offerors must acknowledge receipt of this amendment by number and date on SF 1442 BACK, Block 19, or by telegram. Please mark outside of the envelope containing the proposal to show amendments received.

FROM: US ARMY ENGR DIST, SEATTLE
P.O. BOX 3755
SEATTLE, WA 98124-3755
(206) 764-6588, CENWS-CT-CB-MU, PATRICIS HOLMES

1. Refer to Request for Proposals No. DACA67-00-R-0214, entitled, "Design-Build: FY 00 Dormitory, Malmstrom Air Force Base, MT" dated 2 March 2000.

2. This Amendment Five (0005), dated 24 April 2000, which provides for the following:

PROPOSAL DUE DATE AND TIME remains unchanged at 3:00 p.m. Pacific Daylight Time, 28 April 2000

The as-built CADD files of the FY97 Dormitory, Malmstrom AFB, Bldg.655, which is adjacent to the site of the new FY00 144 Person Dormitory at Malmstrom AFB. These CADD drawings are available by download through the website only and are provided for informational purposes only.
This web address is: http://nws-web.nws.usace.army.mil/ct

a) Click on Advertised Solicitations
b) Click on Solicitation Number: DACA67-00-R-0214
c) At the bottom of the RFP page click on Amendment No. 5

3. Offerors must acknowledge receipt of this amendment by number and date on SF 1442 page BACK, in Block 19, or by telegram. Please mark the outside of the envelope in which the offeror is enclosed to show amendment received.

4. No confirmation copy will be mailed.

5. All Files have been translated from MicroStation to AutoCAD R14.

6. Disclaimer -

It is understood that while the Corps of Engineers and its information Suppliers have no indication or reason to believe that there are Inaccuracies in information incorporated in the electronic Information representations furnished herein,
THE CORPS AND ITS SUPPLIERS MAKE NO REPRESENTATION OF ANY KIND, INCLUDING BUT NOT LIMITED TO WARRANTIES OR MERCHANTABILITY OR FITNESS FOR A PARTICULAR USE, NOR ANY SUCH WARRANTIES TO BE IMPLIED WITH RESPECT TO INFORMATION, DATA, OR SERVICES FURNISHED HEREIN.

This page intentionally blank

AMENDMENT OF SOLICITATION/MODIFICATION OF CONTRACT

1. CONTRACT ID CODE	PAGE OF PAGES	
J	1	2

2. AMENDMENT/MODIFICATION NO.	3. EFFECTIVE DATE	4. REQUISITION/PURCHASE REQ. NO.	5. PROJECT NO.(If applicable)
0004	18-Apr-2000	W68MD9-9348-3636	

6. ISSUED BY CODE DACA67
USA ENGINEER DISTRICT, SEATTLE
ATTN: CENWS-CT
P.O. BOX 3755

SEATTLE, WA 98124-3755

7. ADMINISTERED BY (If other than item 6) CODE

See Item 6

8. NAME AND ADDRESS OF CONTRACTOR (No., Street, County, State and Zip Code)

CODE FACILITY CODE

X	9A. AMENDMENT OF SOLICITATION NO. DACA67-00-R-0214
X	9B. DATED (SEE ITEM 11) 02-Mar-2000
	10A. MOD. OF CONTRACT/ORDER NO.
	10B. DATED (SEE ITEM 13)

11. THIS ITEM ONLY APPLIES TO AMENDMENTS OF SOLICITATIONS

[X] The above numbered solicitation is amended as set forth in Item 14. The hour and date specified for receipt of Offer [ ] is extended, [X] is not extended.

Offers must acknowledge receipt of this amendment prior to the hour and date specified in the solicitation or as amended by one of the following methods: (a) By completing Items 8 and 15, and returning _____ copies of the document; (b) By acknowledging receipt of this amendment on each copy of the offer submitted; or (c) By separate letter or telegram which includes a reference to the solicitation and amendment numbers. FAILURE OF YOUR ACKNOWLEDGMENT TO BE RECEIVED AT THE PLACE DESIGNATED FOR THE RECEIPT OF OFFERS PRIOR TO THE HOUR AND DATE SPECIFIED MAY RESULT IN THE REJECTION OF YOUR OFFER. If by virtue of this amendment you desire to change an offer already submitted, such change may be made by telegram or letter, provided each telegram or letter makes reference to the solicitation and this amendment, and is received prior to the opening hour and date specified.

12. ACCOUNTING AND APPROPRIATION DATA (If required)

13. THIS ITEM APPLIES ONLY TO MODIFICATIONS OF CONTRACTS/ORDERS.
IT MODIFIES THE CONTRACT/ORDER NO. AS DESCRIBED IN ITEM 14.

[ ] A. THIS CHANGE ORDER IS ISSUED PURSUANT TO: (Specify authority) THE CHANGES SET FORTH IN ITEM 14 ARE MADE IN THE CONTRACT ORDER NO. IN ITEM 10A.

[ ] B. THE ABOVE NUMBERED CONTRACT/ORDER IS MODIFIED TO REFLECT THE ADMINISTRATIVE CHANGES (such as changes in paying office, appropriation date, etc.) SET FORTH IN ITEM 14, PURSUANT TO THE AUTHORITY OF FAR 43.103(B).

[ ] C. THIS SUPPLEMENTAL AGREEMENT IS ENTERED INTO PURSUANT TO AUTHORITY OF:

[ ] D. OTHER (Specify type of modification and authority)

E. IMPORTANT: Contractor [ ] is not, [ ] is required to sign this document and return _____ copies to the issuing office.

14. DESCRIPTION OF AMENDMENT/MODIFICATION (Organized by UCF section headings, including solicitation/contract subject matter where feasible.)

Design Build: FY00 Dormitory, Malmstrom AFB, Montana

SEE ATTACHED PAGE

Except as provided herein, all terms and conditions of the document referenced in Item 9A or 10A, as heretofore changed, remains unchanged and in full force and effect.

15A. NAME AND TITLE OF SIGNER (Type or print)		16A. NAME AND TITLE OF CONTRACTING OFFICER (Type or print) PATRICIA J HOLMES / CONTRACT SPECIALIST	
15B. CONTRACTOR/OFFEROR (Signature of person authorized to sign)	15C. DATE SIGNED	16B. UNITED STATES OF AMERICA BY (Signature of Contracting Officer)	16C. DATE SIGNED 18-Apr-2000

SECTION SF 30 BLOCK 14 CONTINUATION PAGE

1. This Amendment Number Four (0004) provides for the following:

   a. Correction of website address for CADD files of site topo and concept plans provided in Amendment No. 0003 to read:

http://nws-web.nws.usace.army.mil/ct/ebs/asp/ViewSolicitation.asp?SolicitationNumber=DACA67-00-R-0214

   b. DELETE: Section 00100 INSERT: Revised Section 00100

   c. DELETE: Section 00800 INSERT: Revised Section 00800

2. PROPOSAL DUE DATE AND TIME remains unchanged at 3:00 p.m. Pacific Daylight Time, 28 April 2000.

3. Offerors must acknowledge receipt of this amendment by number and date on Standard Form 1442 BACK, in Block 19 or by telegram. Please mark the outside of the envelope in which the offer is enclosed to show amendment received.

Enclosures: Section 00100 – INTRO and Section 00800.

AMENDMENT OF SOLICITATION/MODIFICATION OF CONTRACT

1. CONTRACT ID CODE	PAGE OF PAGES	
J	1	2

2. AMENDMENT/MODIFICATION NO.	3. EFFECTIVE DATE	4. REQUISITION/PURCHASE REQ. NO.	5. PROJECT NO.(If applicable)
0003	13-Apr-2000	W68MD9-9348-3636	

6. ISSUED BY CODE DACA67
USA ENGINEER DISTRICT, SEATTLE
ATTN: CENWS-CT
P.O. BOX 3755

SEATTLE, WA 98124-3755

7. ADMINISTERED BY (If other than item 6) CODE

See Item 6

8. NAME AND ADDRESS OF CONTRACTOR (No., Street, County, State and Zip Code)

CODE FACILITY CODE

X	9A. AMENDMENT OF SOLICITATION NO. DACA67-00-R-0214
X	9B. DATED (SEE ITEM 11) 02-Mar-2000
	10A. MOD. OF CONTRACT/ORDER NO.
	10B. DATED (SEE ITEM 13)

11. THIS ITEM ONLY APPLIES TO AMENDMENTS OF SOLICITATIONS

[X] The above numbered solicitation is amended as set forth in Item 14. The hour and date specified for receipt of Offer [ ] is extended, [X] is not extended.

Offers must acknowledge receipt of this amendment prior to the hour and date specified in the solicitation or as amended by one of the following methods: (a) By completing Items 8 and 15, and returning 0 copies of the document; (b) By acknowledging receipt of this amendment on each copy of the offer submitted; or (c) By separate letter or telegram which includes a reference to the solicitation and amendment numbers. FAILURE OF YOUR ACKNOWLEDGMENT TO BE RECEIVED AT THE PLACE DESIGNATED FOR THE RECEIPT OF OFFERS PRIOR TO THE HOUR AND DATE SPECIFIED MAY RESULT IN THE REJECTION OF YOUR OFFER. If by virtue of this amendment you desire to change an offer already submitted, such change may be made by telegram or letter, provided each telegram or letter makes reference to the solicitation and this amendment, and is received prior to the opening hour and date specified.

12. ACCOUNTING AND APPROPRIATION DATA (If required)

13. THIS ITEM APPLIES ONLY TO MODIFICATIONS OF CONTRACTS/ORDERS.
IT MODIFIES THE CONTRACT/ORDER NO. AS DESCRIBED IN ITEM 14.

[ ] A. THIS CHANGE ORDER IS ISSUED PURSUANT TO: (Specify authority) THE CHANGES SET FORTH IN ITEM 14 ARE MADE IN THE CONTRACT ORDER NO. IN ITEM 10A.

[ ] B. THE ABOVE NUMBERED CONTRACT/ORDER IS MODIFIED TO REFLECT THE ADMINISTRATIVE CHANGES (such as changes in paying office, appropriation date, etc.) SET FORTH IN ITEM 14, PURSUANT TO THE AUTHORITY OF FAR 43.103(B).

[ ] C. THIS SUPPLEMENTAL AGREEMENT IS ENTERED INTO PURSUANT TO AUTHORITY OF:

[ ] D. OTHER (Specify type of modification and authority)

E. IMPORTANT: Contractor [ ] is not, [ ] is required to sign this document and return _____ copies to the issuing office.

14. DESCRIPTION OF AMENDMENT/MODIFICATION (Organized by UCF section headings, including solicitation/contract subject matter where feasible.)
Design-Build: FY00 Dormitory, Malmstrom AFB, Montana

see attached page

Except as provided herein, all terms and conditions of the document referenced in Item 9A or 10A, as heretofore changed, remains unchanged and in full force and effect.

15A. NAME AND TITLE OF SIGNER (Type or print)		16A. NAME AND TITLE OF CONTRACTING OFFICER (Type or print) MARY E MITTON / CONTRACT SPECIALIST	
15B. CONTRACTOR/OFFEROR (Signature of person authorized to sign)	15C. DATE SIGNED	16B. UNITED STATES OF AMERICA BY (Signature of Contracting Officer)	16C. DATE SIGNED 13-Apr-2000

SECTION SF 30 BLOCK 14 CONTINUATION PAGE

A. This amendment provides for the following revisions to the solicitation:

1. Section 00100-INTRO is replaced in its entirety. Please read this section completely as there are changes throughout. Submittal requirements for experience and qualifications are now included in this section.

2. Section 00600 is revised to delete pages 28a, 28b, and 28c, which told bidders to submit those pages "regarding pre-award information."

3. Modification to concept drawings Plates A1.1 through A1.5 is made by notation in Appendix B (Index of Drawings).

4. Clarification to specifications sections 00860, 08110, 08210, 08700, 09310, 09720, 12320, and 12490 are provided. Entire revised specifications are issued by this amendment.

5. The address for CADD files of site topo and concept plans provided in Amendment No.0001 is corrected to add a "w" before the "eb.nws" as follows:

"http://www.nwsw-eb.nws.usace.army.mil/ct/ebs/asp/ViewAmendment.asp?SolicitationNumber=DACA67-00-R-0214&AmendmentNumber=1"

B. The attached page is hereby added and substituted for the superseded page. In most instances, a side bar has been used to denote location of changes. Insert revised pages and sections in sequence.

C. PROPOSAL DUE DATE AND TIME remain the unchanged at 3:00 p.m., Pacific Daylight Time, 28 April 2000.

D. Offerors must acknowledge receipt of this amendment by number and date on Standard Form 1442 BACK, in Block 19 or by telegram. Please mark the outside of the envelope in which the offer is enclosed to show amendment received.

Enclosures: Section 00100-INTRO, 00860, 08110, 08210, 08700, 09310, 09720, 12320, 12490 and Appendix B Index of Drawings

AMENDMENT OF SOLICITATION/MODIFICATION OF CONTRACT

1. CONTRACT ID CODE	PAGE OF PAGES	
J	1	2

2. AMENDMENT/MODIFICATION NO.	3. EFFECTIVE DATE	4. REQUISITION/PURCHASE REQ. NO.	5. PROJECT NO.(If applicable)
0002	06-Apr-2000	W68MD9-9348-3636	

6. ISSUED BY CODE DACA67
USA ENGINEER DISTRICT, SEATTLE
ATTN: CENWS-CT
P.O. BOX 3755

SEATTLE, WA 98124-3755

7. ADMINISTERED BY (If other than item 6) CODE

See Item 6

8. NAME AND ADDRESS OF CONTRACTOR (No., Street, County, State and Zip Code)

CODE FACILITY CODE

X	9A. AMENDMENT OF SOLICITATION NO. DACA67-00-R-0214
X	9B. DATED (SEE ITEM 11) 02-Mar-2000
	10A. MOD. OF CONTRACT/ORDER NO.
	10B. DATED (SEE ITEM 13)

11. THIS ITEM ONLY APPLIES TO AMENDMENTS OF SOLICITATIONS

[X] The above numbered solicitation is amended as set forth in Item 14. The hour and date specified for receipt of Offer [X] is extended, [ ] is not extended.

Offers must acknowledge receipt of this amendment prior to the hour and date specified in the solicitation or as amended by one of the following methods: (a) By completing Items 8 and 15, and returning _____ copies of the document; (b) By acknowledging receipt of this amendment on each copy of the offer submitted; or (c) By separate letter or telegram which includes a reference to the solicitation and amendment numbers. FAILURE OF YOUR ACKNOWLEDGMENT TO BE RECEIVED AT THE PLACE DESIGNATED FOR THE RECEIPT OF OFFERS PRIOR TO THE HOUR AND DATE SPECIFIED MAY RESULT IN THE REJECTION OF YOUR OFFER. If by virtue of this amendment you desire to change an offer already submitted, such change may be made by telegram or letter, provided each telegram or letter makes reference to the solicitation and this amendment, and is received prior to the opening hour and date specified.

12. ACCOUNTING AND APPROPRIATION DATA (If required)

13. THIS ITEM APPLIES ONLY TO MODIFICATIONS OF CONTRACTS/ORDERS.
IT MODIFIES THE CONTRACT/ORDER NO. AS DESCRIBED IN ITEM 14.

[ ] A. THIS CHANGE ORDER IS ISSUED PURSUANT TO: (Specify authority) THE CHANGES SET FORTH IN ITEM 14 ARE MADE IN THE CONTRACT ORDER NO. IN ITEM 10A.

[ ] B. THE ABOVE NUMBERED CONTRACT/ORDER IS MODIFIED TO REFLECT THE ADMINISTRATIVE CHANGES (such as changes in paying office, appropriation date, etc.) SET FORTH IN ITEM 14, PURSUANT TO THE AUTHORITY OF FAR 43.103(B).

[ ] C. THIS SUPPLEMENTAL AGREEMENT IS ENTERED INTO PURSUANT TO AUTHORITY OF:

[ ] D. OTHER (Specify type of modification and authority)

E. IMPORTANT: Contractor [ ] is not, [ ] is required to sign this document and return _____ copies to the issuing office.

14. DESCRIPTION OF AMENDMENT/MODIFICATION (Organized by UCF section headings, including solicitation/contract subject matter where feasible.)

This Amendment Number Two (0002) provides for the following changes:

1. Replace Section 00800 SC-1 COMMENCEMENT, PROSECUTION, AND COMPLETION OF WORK (APR 194) (FAR 52.211-10) to read as follows: "The Contractor shall be required to (commence work under this Contract within 10 calendar days after the date the Contractor receives the notice to proceed, (b) prosecute the work diligently, and (c) complete the entire work ready for use not later than "540" calendar days after date of receipt by Contractor of notice to proceed. The time stated for completion shall include final cleanup of the premises."

2. Change Block 11 of the SF1442 to read: ".... complete it within 540 calendar days.....".

3. PROPOSAL DUE DATE IS HEREBY EXTENDED TO: 3:00pm Pacific Daylight Time 28 April 2000.

Except as provided herein, all terms and conditions of the document referenced in Item 9A or 10A, as heretofore changed, remains unchanged and in full force and effect.

15A. NAME AND TITLE OF SIGNER (Type or print)		16A. NAME AND TITLE OF CONTRACTING OFFICER (Type or print) PATRICIA J HOLMES / CONTRACT SPECIALIST	
15B. CONTRACTOR/OFFEROR (Signature of person authorized to sign)	15C. DATE SIGNED	16B. UNITED STATES OF AMERICA BY (Signature of Contracting Officer)	16C. DATE SIGNED 06-Apr-2000

SECTION SF 30 BLOCK 14 CONTINUATION PAGE

4. Revisions to concept drawings Plates C1.2, A1.1, A1.3, A1.5, and E1.1. See page Appendix B-TC. The revised drawings in CALS format are attached. The revised files in CADD format were included in Amendment 0001.

5. Minor revisions and clarifications to specifications sections 00810,00860, 01501, 02200, 02234, 02300, 02383, 02770, 03200, 03300, 03300A, 05300, 06100, 07411, 08810, 09650, 12320, and 16768. Entire revised specifications are issued by this amendment.

6. Specification Section 15990 has been replaced entirely with new specification 15990. New specification Section 13112 has been added.

7. The attached revised drawings and specifications supercede the existing drawings and specifications.

8. No further changes occur as a result of this amendment.

NOTICE TO OFFERORS: Offerors must acknowledge receipt of this amendment by number and date on SF1442 BACK in Block 19, or by telegram. Please mark outside of the envelope containing the proposal to show amendments received.

AMENDMENT OF SOLICITATION/MODIFICATION OF CONTRACT

1. CONTRACT ID CODE	PAGE OF PAGES	
J	1	10

2. AMENDMENT/MODIFICATION NO.	3. EFFECTIVE DATE	4. REQUISITION/PURCHASE REQ. NO.	5. PROJECT NO.(If applicable)
0001	05-Apr-2000	W68MD9-9348-3636	

6. ISSUED BY CODE DACA67
USA ENGINEER DISTRICT, SEATTLE
ATTN: CENWS-CT
P.O. BOX 3755

SEATTLE, WA 98124-3755

7. ADMINISTERED BY (If other than item 6) CODE

See Item 6

8. NAME AND ADDRESS OF CONTRACTOR (No., Street, County, State and Zip Code)

CODE FACILITY CODE

X	9A. AMENDMENT OF SOLICITATION NO. DACA67-00-R-0214
X	9B. DATED (SEE ITEM 11) 02-Mar-2000
	10A. MOD. OF CONTRACT/ORDER NO.
	10B. DATED (SEE ITEM 13)

11. THIS ITEM ONLY APPLIES TO AMENDMENTS OF SOLICITATIONS

[X] The above numbered solicitation is amended as set forth in Item 14. The hour and date specified for receipt of Offer [ ] is extended, [X] is not extended.

Offers must acknowledge receipt of this amendment prior to the hour and date specified in the solicitation or as amended by one of the following methods: (a) By completing Items 8 and 15, and returning _____ copies of the document; (b) By acknowledging receipt of this amendment on each copy of the offer submitted; or (c) By separate letter or telegram which includes a reference to the solicitation and amendment numbers. FAILURE OF YOUR ACKNOWLEDGMENT TO BE RECEIVED AT THE PLACE DESIGNATED FOR THE RECEIPT OF OFFERS PRIOR TO THE HOUR AND DATE SPECIFIED MAY RESULT IN THE REJECTION OF YOUR OFFER. If by virtue of this amendment you desire to change an offer already submitted, such change may be made by telegram or letter, provided each telegram or letter makes reference to the solicitation and this amendment, and is received prior to the opening hour and date specified.

12. ACCOUNTING AND APPROPRIATION DATA (If required)

13. THIS ITEM APPLIES ONLY TO MODIFICATIONS OF CONTRACTS/ORDERS.
IT MODIFIES THE CONTRACT/ORDER NO. AS DESCRIBED IN ITEM 14.

[ ] A.THIS CHANGE ORDER IS ISSUED PURSUANT TO: (Specify authority) THE CHANGES SET FORTH IN ITEM 14 ARE MADE IN THE CONTRACT ORDER NO. IN ITEM 10A.

[ ] B.THE ABOVE NUMBERED CONTRACT/ORDER IS MODIFIED TO REFLECT THE ADMINISTRATIVE CHANGES (such as changes in paying office, appropriation date, etc.) SET FORTH IN ITEM 14, PURSUANT TO THE AUTHORITY OF FAR 43.103(B).

[ ] C.THIS SUPPLEMENTAL AGREEMENT IS ENTERED INTO PURSUANT TO AUTHORITY OF:

[ ] D.OTHER (Specify type of modification and authority)

E. IMPORTANT: Contractor [ ] is not, [ ] is required to sign this document and return _____ copies to the issuing office.

14. DESCRIPTION OF AMENDMENT/MODIFICATION (Organized by UCF section headings, including solicitation/contract subject matter where feasible.)

This is Amendment Number One (0001) which provides for the following:

A. Preproposal Conference Minutes dated 24 March 2000, specification/technical clarification questions, and attendance sheet are hereby incorporated into this solicitation.

B. CADD files of site topo and concept plans are available via the Seattle District website;
"http://www.nws-eb.nws.usace.army.mil/ct/ebs/asp/ViewAmendment.asp? SolicitationNumber+DACA67-00-R-0214&AmendmentNumber=1"
Files are furnished for information purposes only - see disclaimer in the readme.txt file.

C. The electronic files with specifications Division 2 through 16 will be made available to the awarded proposer.

D. Specification/technical clarifications submitted during the preproposal conference will be addressed in the forthcoming technical amendment.

Except as provided herein, all terms and conditions of the document referenced in Item 9A or 10A, as heretofore changed, remains unchanged and in full force and effect.

15A. NAME AND TITLE OF SIGNER (Type or print)		16A. NAME AND TITLE OF CONTRACTING OFFICER (Type or print) PATRICIA J HOLMES / CONTRACT SPECIALIST	
15B. CONTRACTOR/OFFEROR (Signature of person authorized to sign)	15C. DATE SIGNED	16B. UNITED STATES OF AMERICA BY (Signature of Contracting Officer)	16C. DATE SIGNED 05-Apr-2000

SECTION SF 30 BLOCK 14 CONTINUATION PAGE

E. Change Block 13 A of the SF 1442 "Sealed offers in original and **2** copies…" to read: "Sealed offers in original and **–0-** copies….."

F. **DELETE:** Table of Contents
INSERT: Revised Table of Contents

G. **DELETE:** Section 00100
INSERT: Revised Section 00100

H. Clause 52.228-1 BID GUARNTEE (SEP 1996) paragraph (c):
INSERT: The amount of the bid guarantee shall be **20 percent** of the bid price or **20 percent of the Total Amount of Funds Available for Design and Construction of this project which is $9,235,000**, whichever is less.

I. THE PROPOSAL DUE DATE REMAINS THE SAME: 3:00pm Pacific Daylight Time, 25 April, 2000.

J. NOTICE TO OFFERORS: Offerors must acknowledge receipt of this amendment by number and date on Standard Form 1442 BACK, in Block 19, or by telegram. Please mark the outside of the envelope in which the offeror is enclosed to show the amendment received.

SECTION 00700 Contract Clauses

CLAUSES INCORPORATED BY FULL TEXT

52.202-1	Definitions	OCT 1995
52.203-3	Gratuities	APR 1984
52.203-5	Covenant Against Contingent Fees	APR 1984
52.203-7	Anti-Kickback Procedures	JUL 1995
52.203-8	Cancellation, Rescission, and Recovery of Funds for Illegal or Improper Activity	JAN 1997
52.203-10	Price Or Fee Adjustment For Illegal Or Improper Activity	JAN 1997
52.203-12	Limitation On Payments To Influence Certain Federal Transactions	JUN 1997
52.204-4	Printing/Copying Double-Sided on Recycled Paper	JUN 1996
52.209-6	Protecting the Government's Interest When Subcontracting With Contractors Debarred, Suspended, or Proposed for Debarment	JUL 1995
52.215-2	Audit and Records--Negotiation	JUN 1999
52.215-10	Price Reduction for Defective Cost or Pricing Data	OCT 1997
52.215-11	Price Reduction for Defective Cost or Pricing Data--Modifications	OCT 1997
52.215-12	Subcontractor Cost or Pricing Data	OCT 1997
52.219-8	Utilization of Small Business Concerns	OCT 1999
52.219-9	Small Business Subcontracting Plan	OCT 1999
52.219-16	Liquidated Damages-Subcontracting Plan	JAN 1999
52.222-1	Notice To The Government Of Labor Disputes	FEB 1997
52.222-3	Convict Labor	AUG 1996
52.222-4	Contract Work Hours and Safety Standards Act - Overtime Compensation	JUL 1995
52.222-6	Davis Bacon Act	FEB 1995
52.222-7	Withholding of Funds	FEB 1988
52.222-8	Payrolls and Basic Records	FEB 1988
52.222-9	Apprentices and Trainees	FEB 1988
52.222-10	Compliance with Copeland Act Requirements	FEB 1988
52.222-11	Subcontracts (Labor Standards)	FEB 1988
52.222-12	Contract Termination-Debarment	FEB 1988
52.222-13	Compliance with Davis-Bacon and Related Act Regulations.	FEB 1988
52.222-14	Disputes Concerning Labor Standards	FEB 1988
52.222-15	Certification of Eligibility	FEB 1988
52.222-23	Notice of Requirement for Affirmative Action to Ensure Equal Employment Opportunity for Construction	FEB 1999
52.222-26	Equal Opportunity	FEB 1999
52.222-27	Affirmative Action Compliance Requirements for Construction	FEB 1999
52.222-35	Affirmative Action For Disabled Veterans And Veterans of the Vietnam Era	APR 1998
52.222-36	Affirmative Action For Workers With Disabilities	JUN 1998
52.222-37	Employment Reports On Disabled Veterans And Veterans Of The	JAN 1999

	Vietnam Era	
52.223-2	Clean Air And Water	APR 1984
52.223-3	Hazardous Material Identification And Material Safety Data	JAN 1997
52.223-6	Drug Free Workplace	JAN 1997
52.223-5	Pollution Prevention and Right-to-Know Information	APR 1998
52.223-14	Toxic Chemical Release Reporting	OCT 1996
52.225-5	Buy American Act - Construction Materials	FEB 2000
52.225-11	Restrictions On Certain Foreign Purchases	FEB 2000
52.226-1	Utilization Of Indian Organizations And Indian-Owned Economic Enterprises	FEB 2000
52.226-2	Historically Black College or University and Minority Institution Representation	MAY 1997
52.227-1	Authorization and Consent	JUL 1995
52.228-1	Bid Guarantee	SEP 1996
52.228-2	Additional Bond Security	OCT 1997
52.228-11	Pledges Of Assets	FEB 1992
52.228-12	Prospective Subcontractor Requests for Bonds	OCT 1995
52.228-14	Irrevocable Letter of Credit	DEC 1999
52.228-15	Performance and Payment Bonds--Construction	SEP 1996
52.229-3	Federal, State And Local Taxes	JAN 1991
52.230-2	Cost Accounting Standards	APR 1998
52.232-5	Payments under Fixed-Price Construction Contracts	MAY 1997
52.232-17	Interest	JUN 1996
52.232-18	Availability Of Funds	APR 1984
52.232-23	Assignment Of Claims	JAN 1986
52.232-27	Prompt Payment for Construction Contracts	MAY 1997
52.232-33	Payment by Electronic Funds Transfer--Central Contractor Registration	MAY 1999
52.233-1	Disputes	DEC 1998
52.233-3	Protest After Award	AUG 1996
52.236-1	Performance of Work by the Contractor	APR 1984
52.236-2	Differing Site Conditions	APR 1984
52.236-3	Site Investigation and Conditions Affecting the Work	APR 1984
52.236-5	Material and Workmanship	APR 1984
52.236-6	Superintendence by the Contractor	APR 1984
52.236-7	Permits and Responsibilities	NOV 1991
52.236-8	Other Contracts	APR 1984
52.236-9	Protection of Existing Vegetation, Structures, Equipment, Utilities, and Improvements	APR 1984
52.236-10	Operations and Storage Areas	APR 1984
52.236-11	Use and Possession Prior to Completion	APR 1984
52.236-12	Cleaning Up	APR 1984
52.236-13	Accident Prevention	NOV 1991
52.236-15	Schedules for Construction Contracts	APR 1984
52.236-14	Availability and Use of Utility Services	APR 1984
52.236-17	Layout of Work	APR 1984
52.236-21	Specifications and Drawings for Construction	FEB 1997
52.236-22	Design within Funding Limitations	APR 1984

52.236-23	Responsibility of the Architect-Engineer Contractor	APR 1984
52.236-24	Work Oversight in Architect-Engineer Contracts	APR 1984
52.236-25	Requirements for Registration of Designers	APR 1984
52.236-26	Preconstruction Conference	FEB 1995
52.242-13	Bankruptcy	JUL 1995
52.242-14	Suspension of Work	APR 1984
52.243-4	Changes	AUG 1987
52.246-12	Inspection of Construction	AUG 1996
52.248-3	Value Engineering-Construction	FEB 2000
52.249-2 Alt I	Termination for Convenience of the Government (Fixed-Price) (Sep 1996) - Alternate I	SEP 1996
52.249-10	Default (Fixed-Price Construction)	APR 1984
52.252-6	Authorized Deviations In Clauses	APR 1984
52.252-4	Alterations in Contract	APR 1984
52.253-1	Computer Generated Forms	JAN 1991
252.201-7000	Contracting Officer's Representative	DEC 1991
252.203-7001	Prohibition On Persons Convicted of Fraud or Other Defense-Contract-Related Felonies	MAR 1999
252.204-7001	Commercial And Government Entity (CAGE) Code Reporting	AUG 1999
252.223-7001	Hazard Warning Labels	DEC 1991
252.227-7022	Government Rights (Unlimited)	MAR 1979
252.227-7033	Rights in Shop Drawings	APR 1966
252.227-7023	Drawings and Other Data to become Property of Government	MAR 1979
252.231-7000	Supplemental Cost Principles	DEC 1991
252.236-7000	Modification Proposals-Price Breakdown	DEC 1991
252.243-7001	Pricing Of Contract Modifications	DEC 1991
252.248-7000	Preparation Of Value Engineering Change Proposal	MAY 1994

52.202-1 DEFINITIONS. (OCT 1995)

(a) "Head of the agency" (also called "agency head") or "Secretary" means the Secretary (or Attorney General, Administrator, Governor, Chairperson, or other chief official, as appropriate) of the agency, including any deputy or assistant chief official of the agency, and the term "authorized representative" means any person, persons, or board (other than the Contracting Officer) authorized to act for the head of the agency or Secretary.

(b) Commercial component means any component that is a commercial item.

(c) Commercial item means--

(1) Any item, other than real property, that is of a type customarily used for nongovernmental purposes and that--

(i) Has been sold, leased, or licensed to the general public; or

(ii) Has been offered for sale, lease, or license to the general public;

(2) Any item that evolved from an item described in paragraph (c)(1) of this clause through advances in technology or performance and that is not yet available in the commercial marketplace, but will be available in the commercial marketplace in time to satisfy the delivery requirements under a Government solicitation;

(3) Any item that would satisfy a criterion expressed in paragraphs (c)(1) or (c)(2) of this clause, but for--

(i) Modifications of a type customarily available in the commercial marketplace; or

(ii) Minor modifications of a type not customarily available in the commercial marketplace made to meet Federal Government requirements. ‘‘Minor” modifications means modifications that do not significantly alter the nongovernmental function or essential physical characteristics of an item or component, or change the purpose of a process. Factors to be considered in determining whether a modification is minor include the value and size of the modification and the comparative value and size of the final product. Dollar values and percentages may be used as guideposts, but are not conclusive evidence that a modification is minor;

(4) Any combination of items meeting the requirements of paragraphs (c)(1), (2), (3), or (5) of this clause that are of a type customarily combined and sold in combination to the general public;

(5) Installation services, maintenance services, repair services, training services, and other services if such services are procured for support of an item referred to in paragraphs (c)(1), (2), (3), or (4) of this clause, and if the source of such services--

(i) Offers such services to the general public and the Federal Government contemporaneously and under similar terms and conditions; and

(ii) Offers to use the same work force for providing the Federal Government with such services as the source uses for providing such services to the general public;

(6) Services of a type offered and sold competitively in substantial quantities in the commercial marketplace based on established catalog or market prices for specific tasks performed under standard commercial terms and conditions. This does not include services that are sold based on hourly rates without an established catalog or market price for a specific service performed;

(7) Any item, combination of items, or service referred to in subparagraphs (c)(1) through (c)(6), notwithstanding the fact that the item, combination of items, or service is transferred between or among separate divisions, subsidiaries, or affiliates of a Contractor; or

(8) A nondevelopmental item, if the procuring agency determines the item was developed exclusively at private expense and sold in substantial quantities, on a competitive basis, to multiple State and local Governments.

(d) Component means any item supplied to the Federal Government as part of an end item or of another component.

(e) Nondevelopmental item means--

(1) Any previously developed item of supply used exclusively for governmental purposes by a Federal agency, a State or local government, or a foreign government with which the United States has a mutual defense cooperation agreement;

(2) Any item described in paragraph (e)(1) of this definition that requires only minor modification or modifications of a type customarily available in the commercial marketplace in order to meet the requirements of the procuring department or agency; or

(3) Any item of supply being produced that does not meet the requirements of paragraph (e)(1) or (e)(2) solely because the item is not yet in use.

(f) "Contracting Officer" means a person with the authority to enter into, administer, and/or terminate contracts and make related determinations and findings. The term includes certain authorized representatives of the Contracting Officer acting within the limits of their authority as delegated by the Contracting Officer.

(g) Except as otherwise provided in this contract, the term "subcontracts" includes, but is not limited to, purchase orders and changes and modifications to purchase orders under this contract.

52.203-3 GRATUITIES (APR 1984)

(a) The right of the Contractor to proceed may be terminated by written notice if, after notice and hearing, the agency head or a designee determines that the Contractor, its agent, or another representative--

(1) Offered or gave a gratuity (e.g., an entertainment or gift) to an officer, official, or employee of the Government; and

(2) Intended, by the gratuity, to obtain a contract or favorable treatment under a contract.

(b) The facts supporting this determination may be reviewed by any court having lawful jurisdiction.

(c) If this contract is terminated under paragraph (a) of this clause, the Government is entitled--

(1) To pursue the same remedies as in a breach of the contract; and

(2) In addition to any other damages provided by law, to exemplary damages of not less than 3 nor more than 10 times the cost incurred by the Contractor in giving gratuities to the person concerned, as determined by the agency head or a designee. (This subparagraph (c)(2) is applicable only if this contract uses money appropriated to the Department of Defense.)

(d) The rights and remedies of the Government provided in this clause shall not be exclusive and are in addition to any other rights and remedies provided by law or under this contract.

(End of clause)

52.203-5 COVENANT AGAINST CONTINGENT FEES (APR 1984)

(a) The Contractor warrants that no person or agency has been employed or retained to solicit or obtain this contract upon an agreement or understanding for a contingent fee, except a bona fide employee or agency. For breach or violation of this warranty, the Government shall have the right to annul this contract without liability or, in its discretion, to deduct from the contract price or consideration, or otherwise recover, the full amount of the contingent

fee.

(b) "Bona fide agency," as used in this clause, means an established commercial or selling agency, maintained by a contractor for the purpose of securing business, that neither exerts nor proposes to exert improper influence to solicit or obtain Government contracts nor holds itself out as being able to obtain any Government contract or contracts through improper influence.

"Bona fide employee," as used in this clause, means a person, employed by a contractor and subject to the contractor's supervision and control as to time, place, and manner of performance, who neither exerts nor proposes to exert improper influence to solicit or obtain Government contracts nor holds out as being able to obtain any Government contract or contracts through improper influence.

"Contingent fee," as used in this clause, means any commission, percentage, brokerage, or other fee that is contingent upon the success that a person or concern has in securing a Government contract.

"Improper influence," as used in this clause, means any influence that induces or tends to induce a Government employee or officer to give consideration or to act regarding a Government contract on any basis other than the merits of the matter.

(End of clause)

52.203-7 ANTI-KICKBACK PROCEDURES. (JUL 1995)

(a) Definitions.

"Kickback," as used in this clause, means any money, fee, commission, credit, gift, gratuity, thing of value, or compensation of any kind which is provided, directly or indirectly, to any prime Contractor, prime Contractor employee, subcontractor, or subcontractor employee for the purpose of improperly obtaining or rewarding favorable treatment in connection with a prime contract or in connection with a subcontract relating to a prime contract.

"Person," as used in this clause, means a corporation, partnership, business association of any kind, trust, joint-stock company, or individual.

"Prime contract," as used in this clause, means a contract or contractual action entered into by the United States for the purpose of obtaining supplies, materials, equipment, or services of any kind.

"Prime Contractor," as used in this clause, means a person who has entered into a prime contract with the United States.

"Prime Contractor employee," as used in this clause, means any officer, partner, employee, or agent of a prime Contractor.

"Subcontract," as used in this clause, means a contract or contractual action entered into by a prime Contractor or subcontractor for the purpose of obtaining supplies, materials, equipment, or services of any kind under a prime contract.

"Subcontractor," as used in this clause, (1) means any person, other than the prime Contractor, who offers to furnish or furnishes any supplies, materials, equipment, or services of any kind under a prime contract or a subcontract

entered into in connection with such prime contract, and (2) includes any person who offers to furnish or furnishes general supplies to the prime Contractor or a higher tier subcontractor.

"Subcontractor employee," as used in this clause, means any officer, partner, employee, or agent of a subcontractor.

(b) The Anti-Kickback Act of 1986 (41 U.S.C. 51-58) (the Act), prohibits any person from -

(1) Providing or attempting to provide or offering to provide any kickback;

(2) Soliciting, accepting, or attempting to accept any kickback; or

(3) Including, directly or indirectly, the amount of any kickback in the contract price charged by a prime Contractor to the United States or in the contract price charged by a subcontractor to a prime Contractor or higher tier subcontractor.

(c)(1) The Contractor shall have in place and follow reasonable procedures designed to prevent and detect possible violations described in paragraph (b) of this clause in its own operations and direct business relationships.

(2) When the Contractor has reasonable grounds to believe that a violation described in paragraph (b) of this clause may have occurred, the Contractor shall promptly report in writing the possible violation. Such reports shall be made to the inspector general of the contracting agency, the head of the contracting agency if the agency does not have an inspector general, or the Department of Justice.

(3) The Contractor shall cooperate fully with any Federal agency investigating a possible violation described in paragraph (b) of this clause.

(4) The Contracting Officer may (i) offset the amount of the kickback against any monies owed by the United States under the prime contract and/or (ii) direct that the Prime Contractor withhold, from sums owed a subcontractor under the prime contract, the amount of any kickback. The Contracting Officer may order the monies withheld under subdivision (c)(4)(ii) of this clause be paid over to the Government unless the Government has already offset those monies under subdivision (c)(4)(i) of this clause. In either case, the Prime Contractor shall notify the Contracting Officer when the monies are withheld.

(5) The Contractor agrees to incorporate the substance of this clause, including this subparagraph (c)(5) but excepting subparagraph (c)(1), in all subcontracts under this contract which exceed $100,000.

52.203-8 CANCELLATION, RESCISSION, AND RECOVERY OF FUNDS FOR ILLEGAL OR IMPROPER ACTIVITY (JAN 1997)

(a) If the Government receives information that a contractor or a person has engaged in conduct constituting a violation of subsection (a), (b), (c), or (d) of Section 27 of the Office of Federal Procurement Policy Act (41 U.S.C. 423) (the Act), as amended by section 4304 of the 1996 National Defense Authorization Act for Fiscal Year 1996 (Pub. L. 104-106), the Government may--

(1) Cancel the solicitation, if the contract has not yet been awarded or issued; or

(2) Rescind the contract with respect to which--

(i) The Contractor or someone acting for the Contractor has been convicted for an offense where the conduct constitutes a violation of subsection 27 (a) or (b) of the Act for the purpose of either--

(A) Exchanging the information covered by such subsections for anything of value; or

(B) Obtaining or giving anyone a competitive advantage in the award of a Federal agency procurement contract; or

(ii) The head of the contracting activity has determined, based upon a preponderance of the evidence, that the Contractor or someone acting for the Contractor has engaged in conduct constituting an offense punishable under subsections 27(e)(1) of the Act.

(b) If the Government rescinds the contract under paragraph (a) of this clause, the Government is entitled to recover, in addition to any penalty prescribed by law, the amount expended under the contract.

(c) The rights and remedies of the Government specified herein are not exclusive, and are in addition to any other rights and remedies provided by law, regulation, or under this contract.

52.203-10 PRICE OR FEE ADJUSTMENT FOR ILLEGAL OR IMPROPER ACTIVITY (JAN 1997)

(a) The Government, at its election, may reduce the price of a fixed-price type contract and the total cost and fee under a cost-type contract by the amount of profit or fee determined as set forth in paragraph (b) of this clause if the head of the contracting activity or designee determines that there was a violation of subsection 27 (a), (b), or (c) of the Office of Federal Procurement Policy Act, as amended (41 U.S.C. 423), as implemented in section 3.104 of the Federal Acquisition Regulation.

(b) The price or fee reduction referred to in paragraph (a) of this clause shall be--

(1) For cost-plus-fixed-fee contracts, the amount of the fee specified in the contract at the time of award;

(2) For cost-plus-incentive-fee contracts, the target fee specified in the contract at the time of award, notwithstanding any minimum fee or "fee floor" specified in the contract;

(3) For cost-plus-award-fee contracts--

(i) The base fee established in the contract at the time of contract award;

(ii) If no base fee is specified in the contract, 30 percent of the amount of each award fee otherwise payable to the Contractor for each award fee evaluation period or at each award fee determination point.

(4) For fixed-price-incentive contracts, the Government may--

(i) Reduce the contract target price and contract target profit both by an amount equal to the initial target profit specified in the contract at the time of contract award; or

(ii) If an immediate adjustment to the contract target price and contract target profit would have a significant adverse impact on the incentive price revision relationship under the contract, or adversely affect the contract financing provisions, the Contracting Officer may defer such adjustment until establishment of the total final price of the contract. The total final price established in accordance with the incentive price revision provisions of the contract shall be reduced by an amount equal to the initial target profit specified in the contract at the time of contract award and such reduced price shall be the total final contract price.

(5) For firm-fixed-price contracts, by 10 percent of the initial contract price or a profit amount determined by the Contracting Officer from records or documents in existence prior to the date of the contract award.

(c) The Government may, at its election, reduce a prime contractor's price or fee in accordance with the procedures of paragraph (b) of this clause for violations of the Act by its subcontractors by an amount not to exceed the amount of profit or fee reflected in the subcontract at the time the subcontract was first definitively priced.

(d) In addition to the remedies in paragraphs (a) and (c) of this clause, the Government may terminate this contract for default. The rights and remedies of the Government specified herein are not exclusive, and are in addition to any other rights and remedies provided by law or under this contract.

(End of clause)

52.203-12 LIMITATION ON PAYMENTS TO INFLUENCE CERTAIN FEDERAL TRANSACTIONS (JUN 1997)

(a) Definitions.

"Agency," as used in this clause, means executive agency as defined in 2.101.

"Covered Federal action," as used in this clause, means any of the following Federal actions:

(1) The awarding of any Federal contract.

(2) The making of any Federal grant.

(3) The making of any Federal loan.

(4) The entering into of any cooperative agreement.

(5) The extension, continuation, renewal, amendment, or modification of any Federal contract, grant, loan, or cooperative agreement.

"Indian tribe" and "tribal organization," as used in this clause, have the meaning provided in section 4 of the Indian Self-Determination and Education Assistance Act (25 U.S.C. 450B) and include Alaskan Natives.

"Influencing or attempting to influence," as used in this clause, means making, with the intent to influence, any communication to or appearance before an officer or employee of any agency, a Member of Congress, an officer or employee of Congress, or an employee of a Member of Congress in connection with any covered Federal action.

"Local government," as used in this clause, means a unit of government in a State and, if chartered, established, or otherwise recognized by a State for the performance of a governmental duty, including a local public authority, a special district, an intrastate district, a council of governments, a sponsor group representative organization, and any other instrumentality of a local government.

"Officer or employee of an agency," as used in this clause, includes the following individuals who are employed by an agency:

(1) An individual who is appointed to a position in the Government under title 5, United States Code, including a position under a temporary appointment.

(2) A member of the uniformed services, as defined in subsection 101(3), title 37, United States Code.

(3) A special Government employee, as defined in section 202, title 18, United States Code.

(4) An individual who is a member of a Federal advisory committee, as defined by the Federal Advisory Committee Act, title 5, United States Code, appendix 2.

"Person," as used in this clause, means an individual, corporation, company, association, authority, firm, partnership, society, State, and local government, regardless of whether such entity is operated for profit, or not for profit. This term excludes an Indian tribe, tribal organization, or any other Indian organization with respect to expenditures specifically permitted by other Federal law.

"Reasonable compensation," as used in this clause, means, with respect to a regularly employed officer or employee of any person, compensation that is consistent with the normal compensation for such officer or employee for work that is not furnished to, not funded by, or not furnished in cooperation with the Federal Government.

"Reasonable payment," as used in this clause, means, with respect to professional and other technical services, a payment in an amount that is consistent with the amount normally paid for such services in the private sector.

"Recipient," as used in this clause, includes the Contractor and all subcontractors. This term excludes an Indian tribe, tribal organization, or any other Indian organization with respect to expenditures specifically permitted by other Federal law.

"Regularly employed," as used in this clause, means, with respect to an officer or employee of a person requesting or receiving a Federal contract, an officer or employee who is employed by such person for at least 130 working days within 1 year immediately preceding the date of the submission that initiates agency consideration of such person for receipt of such contract. An officer or employee who is employed by such person for less than 130 working days within 1 year immediately preceding the date of the submission that initiates agency consideration of such person shall be considered to be regularly employed as soon as he or she is employed by such person for 130 working days.

"State," as used in this clause, means a State of the United States, the District of Columbia, the Commonwealth of Puerto Rico, a territory or possession of the United States, an agency or instrumentality of a State, and multi-State, regional, or interstate entity having governmental duties and powers.

(b) Prohibitions.

(1) Section 1352 of title 31, United States Code, among other things, prohibits a recipient of a Federal contract, grant, loan, or cooperative agreement from using appropriated funds to pay any person for influencing or attempting to influence an officer or employee of any agency, a Member of Congress, an officer or employee of Congress, or an employee of a Member of Congress in connection with any of the following covered Federal actions: the awarding of any Federal contract; the making of any Federal grant; the making of any Federal loan; the entering into of any cooperative agreement; or the modification of any Federal contract, grant, loan, or cooperative agreement.

(2) The Act also requires Contractors to furnish a disclosure if any funds other than Federal appropriated funds (including profit or fee received under a covered Federal transaction) have been paid, or will be paid, to any person for influencing or attempting to influence an officer or employee of any agency, a Member of Congress, an officer or employee of Congress, or an employee of a Member of Congress in connection with a Federal contract, grant, loan, or cooperative agreement.

(3) The prohibitions of the Act do not apply under the following conditions:

(i) Agency and legislative liaison by own employees.

(A) The prohibition on the use of appropriated funds, in subparagraph (b)(1) of this clause, does not apply in the case of a payment of reasonable compensation made to an officer or employee of a person requesting or receiving a covered Federal action if the payment is for agency and legislative liaison activities not directly related to a covered Federal action.

(B) For purposes of subdivision (b)(3)(i)(A) of this clause, providing any information specifically requested by an agency or Congress is permitted at any time.

(C) The following agency and legislative liaison activities are permitted at any time where they are not related to a specific solicitation for any covered Federal action:

(1) Discussing with an agency the qualities and characteristics (including individual demonstrations) of the person's products or services, conditions or terms of sale, and service capabilities.

(2) Technical discussions and other activities regarding the application or adaptation of theperson's products or services for an agency's use.

(D) The following agency and legislative liaison activities are permitted where they are prior to formal solicitation of any covered Federal action--

(1) Providing any information not specifically requested but necessary for an agency to make an informed decision about initiation of a covered Federal action;

(2) Technical discussions regarding the preparation of an unsolicited proposal prior to its official submission; and

(3) Capability presentations by persons seeking awards from an agency pursuant to the provisions of the Small Business Act, as amended by Pub. L. 95-507, and subsequent amendments.

(E) Only those services expressly authorized by subdivision (b)(3)(i)(A) of this clause are permitted under this clause.

(ii) Professional and technical services.

(A) The prohibition on the use of appropriated funds, in subparagraph (b)(1) of this clause, does not apply in the case of--

(1) A payment of reasonable compensation made to an officer or employee of a person requesting or receiving a covered Federal action or an extension, continuation, renewal, amendment, or modification of a covered Federal action, if payment is for professional or technical services rendered directly in the preparation, submission, or negotiation of any bid, proposal, or application for that Federal action or for meeting requirements imposed by or pursuant to law as a condition for receiving that Federal action.

(2) Any reasonable payment to a person, other than an officer or employee of a person requesting or receiving a covered Federal action or an extension, continuation, renewal, amendment, or modification of a covered Federal action if the payment is for professional or technical services rendered directly in the preparation, submission, or negotiation of any bid, proposal, or application for that Federal action or for meeting requirements imposed by or pursuant to law as a condition for receiving that Federal action. Persons other than officers or employees of a person requesting or receiving a covered Federal action include consultants and trade associations.

(B) For purposes of subdivision (b)(3)(ii)(A) of this clause, "professional and technical services" shall be limited to advice and analysis directly applying any professional or technical discipline. For example, drafting of a legal document accompanying a bid or proposal by a lawyer is allowable. Similarly, technical advice provided by an engineer on the performance or operational capability of a piece of equipment rendered directly in the negotiation of a contract is allowable. However, communications with the intent to influence made by a professional (such as a licensed lawyer) or a technical person (such as a licensed accountant) are not allowable under this section unless they provide advice and analysis directly applying their professional or technical expertise and unless the advice or analysis is rendered directly and solely in the preparation, submission or negotiation of a covered Federal action. Thus, for example, communications with the intent to influence made by a lawyer that do not provide legal advice or analysis directly and solely related to the legal aspects of his or her client's proposal, but generally advocate one proposal over another are not allowable under this section because the lawyer is not providing professional legal services. Similarly, communications with the intent to influence made by an engineer providing an engineering analysis prior to the preparation or submission of a bid or proposal are not allowable under this section since the engineer is providing technical services but not directly in the preparation, submission or negotiation of a covered Federal action.

(C) Requirements imposed by or pursuant to law as a condition for receiving a covered Federal award include those required by law or regulation and any other requirements in the actual award documents.

(D) Only those services expressly authorized by subdivisions (b)(3)(ii)(A)(1) and (2) of this clause are permitted under this clause.

(E) The reporting requirements of FAR 3.803(a) shall not apply with respect to payments of reasonable compensation made to regularly employed officers or employees of a person.

(c) Disclosure.

(1) The Contractor who requests or receives from an agency a Federal contract shall file with that agency a disclosure form, OMB standard form LLL, Disclosure of Lobbying Activities, if such person has made or has agreed

to make any payment using nonappropriated funds (to include profits from any covered Federal action), which would be prohibited under subparagraph (b)(1) of this clause, if paid for with appropriated funds.

(2) The Contractor shall file a disclosure form at the end of each calendar quarter in which there occurs any event that materially affects the accuracy of the information contained in any disclosure form previously filed by such person under subparagraph (c)(1) of this clause. An event that materially affects the accuracy of the information reported includes--

(i) A cumulative increase of $25,000 or more in the amount paid or expected to be paid for influencing or attempting to influence a covered Federal action; or

(ii) A change in the person(s) or individual(s) influencing or attempting to influence a covered Federal action; or

(iii) A change in the officer(s), employee(s), or Member(s) contacted to influence or attempt to influence a covered Federal action.

(3) The Contractor shall require the submittal of a certification, and if required, a disclosure form by any person who requests or receives any subcontract exceeding $100,000 under the Federal contract.

(4) All subcontractor disclosure forms (but not certifications) shall be forwarded from tier to tier until received by the prime Contractor. The prime Contractor shall submit all disclosures to the Contracting Officer at the end of the calendar quarter in which the disclosure form is submitted by the subcontractor. Each subcontractor certification shall be retained in the subcontract file of the awarding Contractor.

(d) Agreement. The Contractor agrees not to make any payment prohibited by this clause.

(e) Penalties.

(1) Any person who makes an expenditure prohibited under paragraph (a) of this clause or who fails to file or amend the disclosure form to be filed or amended by paragraph (b) of this clause shall be subject to civil penalties as provided for by 31 U.S.C. 1352. An imposition of a civil penalty does not prevent the Government from seeking any other remedy that may be applicable.

(2) Contractors may rely without liability on the representation made by their subcontractors in the certification and disclosure form.

(f) Cost allowability. Nothing in this clause makes allowable or reasonable any costs which would otherwise be unallowable or unreasonable. Conversely, costs made specifically unallowable by the requirements in this clause will not be made allowable under any other provision.

(End of clause)

52.204-4 PRINTING/COPYING DOUBLE-SIDED ON RECYCLED PAPER (JUN 1996)

(a) In accordance with Executive Order 12873, dated October 20, 1993, as amended by Executive Order 12995, dated March 25, 1996, the Offeror/Contractor is encouraged to submit paper documents, such as offers, letters, or reports, that are printed/copied double-sided on recycled paper that has at least 20 percent postconsumer material.

(b) The 20 percent standard applies to high-speed copier paper, offset paper, forms bond, computer printout paper, carbonless paper, file folders, white woven envelopes, and other uncoated printed and writing paper, such as writing and office paper, book paper, cotton fiber paper, and cover stock. An alternative to meeting the 20 percent postconsumer material standard is 50 percent recovered material content of certain industrial by-products.

52.209-6 PROTECTING THE GOVERNMENT'S INTEREST WHEN SUBCONTRACTING WITH CONTRACTORS DEBARRED, SUSPENDED, OR PROPOSED FOR DEBARMENT. (JUL 1995)

(a) The Government suspends or debars Contractors to protect the Government's interests. The Contractor shall not enter into any subcontract in excess of the $25,000 with a Contractor that is debarred, suspended, or proposed for debarment unless there is a compelling reason to do so.

(b) The Contractor shall require each proposed first-tier subcontractor, whose subcontract will exceed $25,000, to disclose to the Contractor, in writing, whether as of the time of award of the subcontract, the subcontractor, or its principles, is or is not debarred, suspended, or proposed for debarment by the Federal Government.

(c) A corporate officer or a designee of the Contractor shall notify the Contracting Officer, in writing, before entering into a subcontract with a party that is debarred, suspended, or proposed for debarment (see FAR 9.404 for information on the List of Parties Excluded from Federal Procurement and Nonprocurement Programs). The notice must include the following:

(1) The name of the subcontractor.

(2) The Contractor's knowledge of the reasons for the subcontractor being on the List of Parties Excluded from Federal Procurement and Nonprocurement Programs.

(3) The compelling reason(s) for doing business with the subcontractor notwithstanding its inclusion on the List of Parties Excluded from Federal Procurement and Nonprocurement Programs.

(4) The systems and procedures the Contractor has established to ensure that it is fully protecting the Government's interests when dealing with such subcontractor in view of the specific basis for the party's debarment, suspension, or proposed debarment.

52.215-2 AUDIT AND RECORDS--NEGOTIATION (JUN 1999)

(a) As used in this clause, "records" includes books, documents, accounting procedures and practices, and other data, regardless of type and regardless of whether such items are in written form, in the form of computer data, or in any other form.

(b) Examination of costs. If this is a cost-reimbursement, incentive, time-and-materials, labor-hour, or price redeterminable contract, or any combination of these, the Contractor shall maintain and the Contracting Officer, or an authorized representative of the Contracting Officer, shall have the right to examine and audit all records and other evidence sufficient to reflect properly all costs claimed to have been incurred or anticipated to be incurred

directly or indirectly in performance of this contract. This right of examination shall include inspection at all reasonable times of the Contractor's plants, or parts of them, engaged in performing the contract.

(c) Cost or pricing data. If the Contractor has been required to submit cost or pricing data in connection with any pricing action relating to this contract, the Contracting Officer, or an authorized representative of the Contracting Officer, in order to evaluate the accuracy, completeness, and currency of the cost or pricing data, shall have the right to examine and audit all of the Contractor's records, including computations and projections, related to--

(1) The proposal for the contract, subcontract, or modification;

(2) The discussions conducted on the proposal(s), including those related to negotiating;

(3) Pricing of the contract, subcontract, or modification; or

(4) Performance of the contract, subcontract or modification.

(d) Comptroller General--(1) The Comptroller General of the United States, or an authorized representative, shall have access to and the right to examine any of the Contractor's directly pertinent records involving transactions related to this contract or a subcontract hereunder.

(2) This paragraph may not be construed to require the Contractor or subcontractor to create or maintain any record that the Contractor or subcontractor does not maintain in the ordinary course of business or pursuant to a provision of law.

(e) Reports. If the Contractor is required to furnish cost, funding, or performance reports, the Contracting Officer or an authorized representative of the Contracting Officer shall have the right to examine and audit the supporting records and materials, for the purpose of evaluating (1) the effectiveness of the Contractor's policies and procedures to produce data compatible with the objectives of these reports and (2) the data reported.

(f) Availability. The Contractor shall make available at its office at all reasonable times the records, materials, and other evidence described in paragraphs (a), (b), (c), (d), and (e) of this clause, for examination, audit, or reproduction, until 3 years after final payment under this contract or for any shorter period specified in Subpart 4.7, Contractor Records Retention, of the Federal Acquisition Regulation (FAR), or for any longer period required by statute or by other clauses of this contract. In addition--

(1) If this contract is completely or partially terminated, the Contractor shall make available the records relating to the work terminated until 3 years after any resulting final termination settlement; and

(2) The Contractor shall make available records relating to appeals under the Disputes clause or to litigation or the settlement of claims arising under or relating to this contract until such appeals, litigation, or claims are finally resolved.

(g) The Contractor shall insert a clause containing all the terms of this clause, including this paragraph (g), in all subcontracts under this contract that exceed the simplified acquisition threshold, and--

(1) That are cost-reimbursement, incentive, time-and-materials, labor-hour, or price-redeterminable type or any combination of these;

(2) For which cost or pricing data are required; or

(3) That require the subcontractor to furnish reports as discussed in paragraph (e) of this clause.

The clause may be altered only as necessary to identify properly the contracting parties and the Contracting Officer under the Government prime contract.

(End of clause)

52.215-10 PRICE REDUCTION FOR DEFECTIVE COST OR PRICING DATA (OCT 1997)

(a) If any price, including profit or fee, negotiated in connection with this contract, or any cost reimbursable under this contract, was increased by any significant amount because--

(1) The Contractor or a subcontractor furnished cost or pricing data that were not complete, accurate, and current as certified in its Certificate of Current Cost or Pricing Data;

(2) A subcontractor or prospective subcontractor furnished the Contractor cost or pricing data that were not complete, accurate, and current as certified in the Contractor's Certificate of Current Cost or Pricing Data; or

(3) Any of these parties furnished data of any description that were not accurate, the price or cost shall be reduced accordingly and the contract shall be modified to reflect the reduction.

(b) Any reduction in the contract price under paragraph (a) of this clause due to defective data from a prospective subcontractor that was not subsequently awarded the subcontract shall be limited to the amount, plus applicable overhead and profit markup, by which--

(1) The actual subcontract; or

(2) The actual cost to the Contractor, if there was no subcontract, was less than the prospective subcontract cost estimate submitted by the Contractor; provided, that the actual subcontract price was not itself affected by defective cost or pricing data.

(c)(1) If the Contracting Officer determines under paragraph (a) of this clause that a price or cost reduction should be made, the Contractor agrees not to raise the following matters as a defense:

(i) The Contractor or subcontractor was a sole source supplier or otherwise was in a superior bargaining position and thus the price of the contract would not have been modified even if accurate, complete, and current cost or pricing data had been submitted.

(ii) The Contracting Officer should have known that the cost or pricing data in issue were defective even though the Contractor or subcontractor took no affirmative action to bring the character of the data to the attention of the Contracting Officer.

(iii) The contract was based on an agreement about the total cost of the contract and there was no agreement about the cost of each item procured under the contract.

(iv) The Contractor or subcontractor did not submit a Certificate of Current Cost or Pricing Data.

(2)(i) Except as prohibited by subdivision (c)(2)(ii) of this clause, an offset in an amount determined appropriate by the Contracting Officer based upon the facts shall be allowed against the amount of a contract price reduction if--

(A) The Contractor certifies to the Contracting Officer that, to the best of the Contractor's knowledge and belief, the Contractor is entitled to the offset in the amount requested; and

(B) The Contractor proves that the cost or pricing data were available before the ''as of" date specified on its Certificate of Current Cost or Pricing Data, and that the data were not submitted before such date.

(ii) An offset shall not be allowed if--

(A) The understated data were known by the Contractor to be understated before the ''as of" date specified on its Certificate of Current Cost or Pricing Data; or

(B) The Government proves that the facts demonstrate that the contract price would not have increased in the amount to be offset even if the available data had been submitted before the ''as of" date specified on its Certificate of Current Cost or Pricing Data.

(d) If any reduction in the contract price under this clause reduces the price of items for which payment was made prior to the date of the modification reflecting the price reduction, the Contractor shall be liable to and shall pay the United States at the time such overpayment is repaid--

(1) Simple interest on the amount of such overpayment to be computed from the date(s) of overpayment to the Contractor to the date the Government is repaid by the Contractor at the applicable underpayment rate effective for each quarter prescribed by the Secretary of the Treasury under 26 U.S.C. 6621(a)(2); and

A penalty equal to the amount of the overpayment, if the Contractor or subcontractor knowingly submitted cost or pricing data that were incomplete, inaccurate, or noncurrent.

52.215-11 PRICE REDUCTION FOR DEFECTIVE COST OR PRICING DATA--MODIFICATIONS (OCT 1997)

(a) This clause shall become operative only for any modification to this contract involving a pricing adjustment expected to exceed the threshold for submission of cost or pricing data at FAR 15.403-4, except that this clause does not apply to any modification if an exception under FAR 15.403-1 applies.

(b) If any price, including profit or fee, negotiated in connection with any modification under this clause, or any cost reimbursable under this contract, was increased by any significant amount because (1) the Contractor or a subcontractor furnished cost or pricing data that were not complete, accurate, and current as certified in its Certificate of Current Cost or Pricing Data, (2) a subcontractor or prospective subcontractor furnished the Contractor cost or pricing data that were not complete, accurate, and current as certified in the Contractor's Certificate of Current Cost or Pricing Data, or (3) any of these parties furnished data of any description that were not accurate, the price or cost shall be reduced accordingly and the contract shall be modified to reflect the reduction. This right to a

price reduction is limited to that resulting from defects in data relating to modifications for which this clause becomes operative under paragraph (a) of this clause.

(c) Any reduction in the contract price under paragraph (b) of this clause due to defective data from a prospective subcontractor that was not subsequently awarded the subcontract shall be limited to the amount, plus applicable overhead and profit markup, by which--

(1) The actual subcontract; or

(2) The actual cost to the Contractor, if there was no subcontract, was less than the prospective subcontract cost estimate submitted by the Contractor; provided, that the actual subcontract price was not itself affected by defective cost or pricing data.

(d)(1) If the Contracting Officer determines under paragraph (b) of this clause that a price or cost reduction should be made, the Contractor agrees not to raise the following matters as a defense:

(i) The Contractor or subcontractor was a sole source supplier or otherwise was in a superior bargaining position and thus the price of the contract would not have been modified even if accurate, complete, and current cost or pricing data had been submitted.

(ii) The Contracting Officer should have known that the cost or pricing data in issue were defective even though the Contractor or subcontractor took no affirmative action to bring the character of the data to the attention of the Contracting Officer.

(iii) The contract was based on an agreement about the total cost of the contract and there was no agreement about the cost of each item procured under the contract.

(iv) The Contractor or subcontractor did not submit a Certificate of Current Cost or Pricing Data.

(2)(i) Except as prohibited by subdivision (d)(2)(ii) of this clause, an offset in an amount determined appropriate by the Contracting Officer based upon the facts shall be allowed against the amount of a contract price reduction if--

(A) The Contractor certifies to the Contracting Officer that, to the best of the Contractor's knowledge and belief, the Contractor is entitled to the offset in the amount requested; and

(B) The Contractor proves that the cost or pricing data were available before the ''as of" date specified on its Certificate of Current Cost or Pricing Data, and that the data were not submitted before such date.

(ii) An offset shall not be allowed if--

(A) The understated data were known by the Contractor to be understated before the ''as of" date specified on its Certificate of Current Cost or Pricing Data; or

(B) The Government proves that the facts demonstrate that the contract price would not have increased in the amount to be offset even if the available data had been submitted before the ''as of" date specified on its Certificate of Current Cost or Pricing Data.

(e) If any reduction in the contract price under this clause reduces the price of items for which payment was made prior to the date of the modification reflecting the price reduction, the Contractor shall be liable to and shall pay the United States at the time such overpayment is repaid--

(1) Simple interest on the amount of such overpayment to be computed from the date(s) of overpayment to the Contractor to the date the Government is repaid by the Contractor at the applicable underpayment rate effective for each quarter prescribed by the Secretary of the Treasury under 26 U.S.C. 6621(a)(2); and

A penalty equal to the amount of the overpayment, if the Contractor or subcontractor knowingly submitted cost or pricing data that were incomplete, inaccurate, or noncurrent.

52.215-12 SUBCONTRACTOR COST OR PRICING DATA (OCT 1997)

(a) Before awarding any subcontract expected to exceed the threshold for submission of cost or pricing data at FAR 15.403-4, on the date of agreement on price or the date of award, whichever is later; or before pricing any subcontract modification involving a pricing adjustment expected to exceed the threshold for submission of cost or pricing data at FAR 15.403-4, the Contractor shall require the subcontractor to submit cost or pricing data (actually or by specific identification in writing), unless an exception under FAR 15.403-1 applies.

(b) The Contractor shall require the subcontractor to certify in substantially the form prescribed in FAR 15.406-2 that, to the best of its knowledge and belief, the data submitted under paragraph (a) of this clause were accurate, complete, and current as of the date of agreement on the negotiated price of the subcontract or subcontract modification.

(c) In each subcontract that exceeds the threshold for submission of cost or pricing data at FAR 15.403-4, when entered into, the Contractor shall insert either--

(1) The substance of this clause, including this paragraph (c), if paragraph (a) of this clause requires submission of cost or pricing data for the subcontract; or

(2) The substance of the clause at FAR 52.215-13, Subcontractor Cost or Pricing Data--Modifications.

52.219-8 UTILIZATION OF SMALL BUSINESS CONCERNS (OCT 1999)

(a) It is the policy of the United States that small business concerns, HUBZone small business concerns, small business concerns owned and controlled by socially and economically disadvantaged individuals, and small business concerns owned and controlled by women shall have the maximum practicable opportunity to participate in performing contracts let by any Federal agency, including contracts and subcontracts for subsystems, assemblies, components, and related services for major systems. It is further the policy of the United States that its prime contractors establish procedures to ensure the timely payment of amounts due pursuant to the terms of their subcontracts with small business concerns, HUBZone small business concerns, small business concerns owned and

controlled by socially and economically disadvantaged individuals, and small business concerns owned and controlled by women.

(b) The Contractor hereby agrees to carry out this policy in the awarding of subcontracts to the fullest extent consistent with efficient contract performance. The Contractor further agrees to cooperate in any studies or surveys as may be conducted by the United States Small Business Administration or the awarding agency of the United States as may be necessary to determine the extent of the Contractor's compliance with this clause.

(c) Definitions. As used in this contract (1) Small business concern means a small business as defined pursuant to section 3 of the Small Business Act and relevant regulations promulgated pursuant thereto.

(2) HUBZone small business concern means a small business concern that appears on the List of Qualified HUBZone Small Business Concerns maintained by the Small Business Administration.

(3) Small business concern owned and controlled by socially and economically disadvantaged individuals and small disadvantaged business concern mean a small business concern that represents, as part of its offer that--

(i) It has received certification as a small disadvantaged business concern consistent with 13 CFR 124, Subpart B;

(ii) No material change in disadvantaged ownership and control has occurred since its certification;

(iii) Where the concern is owned by one or more individuals, the net worth of each individual upon whom the certification is based does not exceed $750,000 after taking into account the applicable exclusions set forth at 13 CFR 124.104(c)(2); and

(iv) It is identified, on the date of its representation, as a certified small disadvantaged business in the database maintained by the Small Business Administration (PRO-Net).

(4) Small business concern owned and controlled by women means a small business concern--

(i) Which is at least 51 percent owned by one or more women, or, in the case of any publicly owned business, at least 51 percent of the stock of which is owned by one or more women; and

(ii) Whose management and daily business operations are controlled by one or more women.

(d) Contractors acting in good faith may rely on written representations by their subcontractors regarding their status as a small business concern, a HUBZone small business concern, a small business concern owned and controlled by socially and economically disadvantaged individuals, or a small business concern owned and controlled by women.

(End of clause)

52.219-9 SMALL BUSINESS SUBCONTRACTING PLAN (OCT 1999)

(a) This clause does not apply to small business concerns.

(b) "Commercial product," as used in this clause, means a product in regular production that is sold in substantial quantities to the general public and/or industry at established catalog or market prices. It also means a product which, in the opinion of the Contracting Officer, differs only insignificantly from the Contractor's commercial

product.

"Subcontract," as used in this clause, means any agreement (other than one involving an employer-employee relationship) entered into by a Federal Government prime Contractor or subcontractor calling for supplies or services required for performance of the contract or subcontract.

(c) The offeror, upon request by the Contracting Officer, shall submit and negotiate a subcontracting plan, where applicable, that separately addresses subcontracting with small business, HUBZone small business concerns, small disadvantaged business, and women-owned small business concerns. If the offeror is submitting an individual contract plan, the plan must separately address subcontracting with small business, HUBZone small business, small disadvantaged business, and women-owned small business concerns, with a separate part for the basic contract and separate parts for each option (if any). The plan shall be included in and made a part of the resultant contract. The subcontracting plan shall be negotiated within the time specified by the Contracting Officer. Failure to submit and negotiate the subcontracting plan shall make the offeror ineligible for award of a contract..

(d) The offeror’s subcontracting plan shall include the following:

(1) Goals, expressed in terms of percentages of total planned subcontracting dollars, for the use of small business, HUBZone small business, small disadvantaged business, and women-owned small business concerns as subcontractors. The offeror shall include all subcontracts that contribute to contract performance, and may include a proportionate share of products and services that are normally allocated as indirect costs.

(2) A statement of--

(i) Total dollars planned to be subcontracted;

(ii) Total dollars planned to be subcontracted to small business concerns;

(iii) Total dollars planned to be subcontracted to HUBZone small business concerns;

(iv) Total dollars planned to be subcontracted to small disadvantaged business concerns; and

(v) Total dollars planned to be subcontracted to women-owned small business concerns.

(3) A description of the principal types of supplies and services to be subcontracted, and an identification of the types planned for subcontracting to--

(i) Small business concerns;

(ii) HUBZone small business concerns;

(iii) Small disadvantaged business concerns; and

(iv) Women-owned small business concerns.

(4) A description of the method used to develop the subcontracting goals in paragraph (d)(1) of this clause.

(5) A description of the method used to identify potential sources for solicitation purposes (e.g., existing company source lists, the Procurement Marketing and Access Network (PRO-Net) of the Small Business Administration (SBA), the National Minority Purchasing Council Vendor Information Service, the Research and Information Division of the Minority Business Development Agency in the Department of Commerce, or small, HUBZone, small disadvantaged, and women-owned small business trade associations). A firm may rely on the information contained in PRO-Net as an accurate representation of a concern's size and ownership characteristics for the purposes of maintaining a small, HUBZone, small disadvantaged and women-owned small business source list. Use of PRO-Net as its source list does not relieve a firm of its responsibilities (e.g., outreach, assistance, counseling, or publicizing subcontracting opportunities) in this clause.

(6) A statement as to whether or not the offeror in included indirect costs in establishing subcontracting goals, and a description of the method used to determine the proportionate share of indirect costs to be incurred with—

(i) Small business concerns;

(ii) HUBZone small business concerns;

(iii) Small disadvantaged business concerns; and

(iv) Women-owned small business concerns.

(7) The name of the individual employed by the offeror who will administer the offeror's subcontracting program, and a description of the duties of the individual.

(8) A description of the efforts the offeror will make to assure that small business, HUBZone small business, small disadvantaged and women-owned small business concerns have an equitable opportunity to compete for subcontracts.

(9) Assurances that the offeror will include the clause of this contract entitled "Utilization of Business Concerns" in all subcontracts that offer further subcontracting opportunities, and that the offeror will require all subcontractors (except small business concerns) who receive subcontracts in excess of $500,000 ($1,000,000 for construction of any public facility) to adopt a plan similar to the plan agreed to by the offeror.

(10) Assurances that the offeror will (i) cooperate in any studies or surveys as may be required, (ii) submit periodic reports in order to allow the Government to determine the extent of compliance by the offeror with the subcontracting plan, (iii) submit Standard Form (SF) 294, Subcontracting Report for Individual Contracts, and/or SF 295, Summary Subcontract Report, in accordance with the instructions on the forms or as provided in agency regulations and in paragraph (j) of this clause; and (iv) ensure that its subcontractors agree to submit Standard Forms 294 and 295.

(11) A description of the types of records that will be maintained concerning procedures that have been adopted to comply with the requirements and goals in the plan, including establishing source lists; and a description of the offeror's efforts to locate small business, HUBZone small business, small disadvantaged business, and women-owned small business concerns and award subcontracts to them. The records shall include at least the following (on a plant-wide or company-wide basis, unless otherwise indicated)

(i) Source lists (e.g., PRO-Net), guides, and other data that identify small business, HUBZone small business, small disadvantaged business, and women-owned small business concerns.

(ii) Organizations contacted in an attempt to locate sources that are small business, HUBZone small business, small disadvantaged business, or women-owned small business concerns.

(iii) Records on each subcontract solicitation resulting in an award of more than $100,000, indicating--

(A) Whether small business concerns were solicited and, if not, why not;

(B) Whether HUBZone small business concerns were solicited and, if not, why not;

(C) Whether small disadvantaged business concerns were solicited and, if not, why not;

(D) Whether women-owned small business concerns were solicited and, if not, why not; and

(E) If applicable, the reason award was not made to a small business concern.

(iv) Records of any outreach efforts to contact--

(A) Trade associations;

(B) Business development organizations; and

(C) Conferences and trade fairs to locate small, HUBZone small, small disadvantaged, and women-owned small business sources.

(v) Records of internal guidance and encouragement provided to buyers through--

(A) Workshops, seminars, training, etc.; and

(B) Monitoring performance to evaluate compliance with the program's requirements.

(vi) On a contract-by-contract basis, records to support award data submitted by the offeror to the Government, including the name, address, and business size of each subcontractor. Contractors having commercial plans need not comply with this requirement.

(e) In order to effectively implement this plan to the extent consistent with efficient contract performance, the Contractor shall perform the following functions:

(1) Assist small business, HUBZone small business, small disadvantaged business, and women-owned small business concerns by arranging solicitations, time for the preparation of bids, quantities, specifications, and delivery schedules so as to facilitate the participation by such concerns. Where the Contractor's lists of potential small business, HUBZone small business, small disadvantaged business, and women-owned small business subcontractors are excessively long, reasonable effort shall be made to give all such small business concerns an opportunity to compete over a period of time.

(2) Provide adequate and timely consideration of the potentialities of small business, HUBZone small business, small disadvantaged business, and women-owned small business concerns in all ''make-or-buy" decisions.

(3) Counsel and discuss subcontracting opportunities with representatives of small business, HUBZone small business, small disadvantaged business, and women-owned small business firms.

(4) Provide notice to subcontractors concerning penalties and remedies for misrepresentations of business status as small, HUBZone small, small disadvantaged, or women-owned small business for the purpose of obtaining a subcontract that is to be included as part or all of a goal contained in the Contractor's subcontracting plan.

(f) A master subcontracting plan on a plant or division-wide basis which contains all the elements required by paragraph (d) of this clause, except goals, may be incorporated by reference as a part of the subcontracting plan required of the offeror by this clause; provided, (1) the master plan has been approved, (2) the offeror ensures that the master plan is updated as necessary and provides copies of the approved master plan, including evidence of its approval, to the Contracting Officer, and (3) goals and any deviations from the master plan deemed necessary by the Contracting Officer to satisfy the requirements of this contract are set forth in the individual subcontracting plan.

(g)(1) If a commercial product is offered, the subcontracting plan required by this clause may relate to the offeror's production generally, for both commercial and noncommercial products, rather than solely to the Government contract. In these cases, the offeror shall, with the concurrence of the Contracting Officer, submit one company-wide or division-wide annual plan.

(2) The annual plan shall be reviewed for approval by the agency awarding the offeror its first prime contract requiring a subcontracting plan during the fiscal year, or by an agency satisfactory to the Contracting Officer.

(3) The approved plan shall remain in effect during the offeror's fiscal year for all of the offeror's commercial products.

(h) Prior compliance of the offeror with other such subcontracting plans under previous contracts will be con-sidered by the Contracting Officer in determining the responsibility of the offeror for award of the contract.

(i) The failure of the Contractor or subcontractor to comply in good faith with (1) the clause of this contract entitled "Utilization Of Business Concerns," or (2) an approved plan required by this clause, shall be a material breach of the contract.

(j) The Contractor shall submit the following reports:

(1) Standard Form 294, Subcontracting Report for Individual Contracts. This report shall be submitted to the Contracting Officer semiannually and at contract completion. The report covers subcontract award data related to this contract. This report is not required for commercial plans.

(2) Standard Form 295, Summary Subcontract Report. This report encompasses all the contracts with the awarding agency. It must be submitted semi-annually for contracts with the Department of Defense and annually for contracts with civilian agencies. If the reporting activity is covered by a commercial plan, the reporting activity must report annually all subcontract awards under that plan. All reports submitted at the close of each fiscal year (both individual and commercial plans) shall include a breakout, in the Contractor's format, of subcontract awards, in whole dollars, to small disadvantaged business concerns by Standard Industrial Classification (SIC) Major Group. For a commercial plan, the Contractor may obtain from each of its subcontractors a predominant SIC Major Group and report all awards to that subcontractor under its predominant SIC Major Group.

(End of clause)

52.219-16 LIQUIDATED DAMAGES-SUBCONTRACTING PLAN (JAN 1999)

(a) Failure to make a good faith effort to comply with the subcontracting plan, as used in this clause, means a willful or intentional failure to perform in accordance with the requirements of the subcontracting plan approved under the clause in this contract entitled "Small Business Subcontracting Plan," or willful or intentional action to frustrate the plan.

(b) Performance shall be measured by applying the percentage goals to the total actual subcontracting dollars or, if a commercial plan is involved, to the pro rata share of actual subcontracting dollars attributable to Government contracts covered by the commercial plan. If, at contract completion or, in the case of a commercial plan, at the close of the fiscal year for which the plan is applicable, the Contractor has failed to meet its subcontracting goals and the Contracting Officer decides in accordance with paragraph (c) of this clause that the Contractor failed to make a good faith effort to comply with its subcontracting plan, established in accordance with the clause in this contract entitled ‘‘Small Business Subcontracting Plan,’’ the Contractor shall pay the Government liquidated damages in an amount stated. The amount of probable damages attributable to the Contractor’s failure to comply shall be an amount equal to the actual dollar amount by which the Contractor failed to achieve each subcontract goal.

(c) Before the Contracting Officer makes a final decision that the Contractor has failed to make such good faith effort, the Contracting Officer shall give the Contractor written notice specifying the failure and permitting the Contractor to demonstrate what good faith efforts have been made and to discuss the matter. Failure to respond to the notice may be taken as an admission that no valid explanation exists. If, after consideration of all the pertinent data, the Contracting Officer finds that the Contractor failed to make a good faith effort to comply with the subcontracting plan, the Contracting Officer shall issue a final decision to that effect and require that the Contractor pay the Government liquidated damages as provided in paragraph (b) of this clause.

(d) With respect to commercial plans, the Contracting Officer who approved the plan will perform the functions of the Contracting Officer under this clause on behalf of all agencies with contracts covered by the commercial plan.

(e) The Contractor shall have the right of appeal, under the clause in this contract entitled Disputes, from any final decision of the Contracting Officer.

(f) Liquidated damages shall be in addition to any other remedies that the Government may have.

(End of clause)

52.222-1 NOTICE TO THE GOVERNMENT OF LABOR DISPUTES (FEB 1997)

If the Contractor has knowledge that any actual or potential labor dispute is delaying or threatens to delay the timely performance of this contract, the Contractor shall immediately give notice, including all relevant information, to the Contracting Officer.

52.222-3 CONVICT LABOR (AUG 1996)

The Contractor agrees not to employ in the performance of this contract any person undergoing a sentence of imprisonment which has been imposed by any court of a State, the District of Columbia, the Commonwealth of

Puerto Rico, the Virgin Islands, Guam, American Samoa, the Commonwealth of the Northern Mariana Islands, or the Trust Territory of the Pacific Islands. This limitation, however, shall not prohibit the employment by the Contractor in the performance of this contract of persons on parole or probation to work at paid employment during the term of their sentence or persons who have been pardoned or who have served their terms. Nor shall it prohibit the employment by the Contractor in the performance of this contract of persons confined for violation of the laws of any of the States, the District of Columbia, the Commonwealth of Puerto Rico, the Virgin Islands, Guam, American Samoa, the Commonwealth of the Northern Mariana Islands, or the Trust Territory of the Pacific Islands who are authorized to work at paid employment in the community under the laws of such jurisdiction, if--

(a)(1) The worker is paid or is in an approved work training program on a voluntary basis;

(2) Representatives of local union central bodies or similar labor union organizations have been consulted;

(3) Such paid employment will not result in the displacement of employed workers, or be applied in skills, crafts, or trades in which there is a surplus of available gainful labor in the locality, or impair existing contracts for services; and

(4) The rates of pay and other conditions of employment will not be less than those paid or provided for work of a similar nature in the locality in which the work is being performed; and

(b) The Attorney General of the United States has certified that the work-release laws or regulations of the jurisdiction involved are in conformity with the requirements of Executive Order 11755, as amended by Executive Orders 12608 and 12943.

(End of clause)

52.222-4 CONTRACT WORK HOURS AND SAFETY STANDARDS ACT - OVERTIME COMPENSATION. (JUL 1995)

(a) Overtime requirements. No Contractor or subcontractor contracting for any part of the contract work which may require or involve the employment of laborers or mechanics (see Federal Acquisition Regulation (FAR) 22.300) shall require or permit any such laborers or mechanics in any workweek in which the individual is employed on such work to work in excess of 40 hours in such workweek unless such laborer or mechanic receives compensation at a rate not less than 1 1/2 times the basic rate of pay for all hours worked in excess of 40 hours in such workweek.

(b) Violation; liability for unpaid wages; liquidated damages. In the event of any violation of the provisions set forth in paragraph (a) of this clause, the Contractor and any subcontractor responsible therefor shall be liable for the unpaid wages. In addition, such Contractor and subcontractor shall be liable to the United States (in the case of work done under contract for the District of Columbia or a territory, to such District or to such territory), for liquidated damages. Such liquidated damages shall be computed with respect to each individual laborer or mechanics employed in violation of the provisions set forth in paragraph (a) of this clause in the sum of $10 for each calendar day on which such individual was required or permitted to work in excess of the standard workweek of 40 hours without payment of the overtime wages required by provisions set forth in paragraph (a) of this clause.

(c) Withholding for unpaid wages and liquidated damages. The Contracting Officer shall upon his or her own action or upon written request of an authorized representative of the Department of Labor withhold or cause to be withheld, from any moneys payable on account of work performed by the Contractor or subcontractor under any such contract or any other Federal contract with the same Prime Contractor, or any other Federally-assisted contract subject to the

Contract Work Hours and Safety Standards Act which is held by the same Prime Contractor, such sums as may be determined to be necessary to satisfy any liabilities of such Contractor or subcontractor for unpaid wages and liquidated damages as provided in the provisions set forth in paragraph (b) of this clause.

(d) Payrolls and basic records. (1) The Contractor or subcontractor shall maintain payrolls and basic payroll records during the course of contract work and shall preserve them for a period of 3 years from the completion of the contract for all laborers and mechanics working on the contract. Such records shall contain the name and address of each such employee, social security number, correct classifications, hourly rates of wages paid, daily and weekly number of hours worked, deductions made, and actual wages paid. Nothing in this paragraph shall require the duplication of records required to be maintained for construction work by Department of Labor regulations at 29 CFR 5.5(a)(3) implementing the Davis-Bacon Act.

(2) The records to be maintained under paragraph (d)(1) of this clause shall be made available by the Contractor or subcontractor for inspection, copying, or transcription by authorized representatives of the Contracting Officer or the Department of Labor. The Contractor or subcontractor shall permit such representatives to interview employees during working hours on the job.

(e) Subcontracts. The Contractor or subcontractor shall insert in any subcontracts exceeding $100,000 the provisions set forth in paragraphs (a) through (e) of this clause and also a clause requiring the subcontractors to include these provisions in any lower tier subcontracts. The Prime Contractor shall be responsible for compliance by any subcontractor or lower tier subcontractor with the provisions set forth in paragraphs (a) through (e) of this clause.

52.222-6 DAVIS-BACON ACT (FEB 1995)

(a) All laborers and mechanics employed or working upon the site of the work will be paid unconditionally and not less often than once a week, and without subsequent deduction or rebate on any account (except such payroll deductions as are permitted by regulations issued by the Secretary of Labor under the Copeland Act (29 CFR Part 3), the full amount of wages and bona fide fringe benefits (or cash equivalents thereof) due at time of payment computed at rates not less than those contained in the wage determination of the Secretary of Labor which is attached hereto and made a part hereof, regardless of any contractual relationship which may be alleged to exist between the Contractor and such laborers and mechanics. Contributions made or costs reasonably anticipated for bona fide fringe benefits under section 1(b)(2) of the Davis-Bacon Act on behalf of laborers or mechanics are considered wages paid to such laborers or mechanics, subject to the provisions of paragraph (d) of this clause; also, regular contributions made or costs incurred for more than a weekly period (but not less often than quarterly) under plans, funds, or programs which cover the particular weekly period, are deemed to be constructively made or incurred during such period. Such laborers and mechanics shall be paid not less than the appropriate wage rate and fringe benefits in the wage determination for the classification of work actually performed, without regard to skill, except as provided in the clause entitled Apprentices and Trainees. Laborers or mechanics performing work in more than one classification may be compensated at the rate specified for each classification for the time actually worked therein; provided, That the employer's payroll records accurately set forth the time spent in each classification in which work is performed. The wage determination (including any additional classifications and wage rates conformed under paragraph (b) of this clause) and the Davis-Bacon poster (WH-1321) shall be posted at all times by the Contractor and its subcontractors at the site of the work in a prominent and accessible place where it can be easily seen by the workers.

(b)(1) The Contracting Officer shall require that any class of laborers or mechanics which is not listed in the wage determination and which is to be employed under the contract shall be classified in conformance with the wage determination. The Contracting Officer shall approve an additional classification and wage rate and fringe benefits therefor only when all the following criteria have been met:

(i) The work to be performed by the classification requested is not performed by a classification in the wage determination.

(ii) The classification is utilized in the area by the construction industry.

(iii) The proposed wage rate, including any bona fide fringe benefits, bears a reasonable relationship to the wage rates contained in the wage determination.

(2) If the Contractor and the laborers and mechanics to be employed in the classification (if known), or their representatives, and the Contracting Officer agree on the classification and wage rate (including the amount designated for fringe benefits, where appropriate), a report of the action taken shall be sent by the Contracting Officer to the Administrator of the Wage and Hour Division, Employment Standards Administration, U.S. Department of Labor, Washington, DC 20210. The Administrator or an authorized representative will approve, modify, or disapprove every additional classification action within 30 days of receipt and so advise the Contracting Officer or will notify the Contracting Officer within the 30-day period that additional time is necessary.

(3) In the event the Contractor, the laborers or mechanics to be employed in the classification, or their representatives, and the Contracting Officer do not agree on the proposed classification and wage rate (including the amount designated for fringe benefits, where appropriate), the Contracting Officer shall refer the questions, including the views of all interested parties and the recommendation of the Contracting Officer, to the Administrator of the Wage and Hour Division for determination. The Administrator, or an authorized representative, will issue a determination within 30 days of receipt and so advise the Contracting Officer or will notify the Contracting Officer within the 30-day period that additional time is necessary.

(4) The wage rate (including fringe benefits, where appropriate) determined pursuant to subparagraphs (b)(2) and (b)(3) of this clause shall be paid to all workers performing work in the classification under this contract from the first day on which work is performed in the classification.

(c) Whenever the minimum wage rate prescribed in the contract for a class of laborers or mechanics includes a fringe benefit which is not expressed as an hourly rate, the Contractor shall either pay the benefit as stated in the wage determination or shall pay another bona fide fringe benefit or an hourly cash equivalent thereof.

(d) If the Contractor does not make payments to a trustee or other third person, the Contractor may consider as part of the wages of any laborer or mechanic the amount of any costs reasonably anticipated in providing bona fide fringe benefits under a plan or program; provided, That the Secretary of Labor has found, upon the written request of the Contractor, that the applicable standards of the Davis-Bacon Act have been met. The Secretary of Labor may require the Contractor to set aside in a separate account assets for the meeting of obligations under the plan or program.

52.222-7 WITHHOLDING OF FUNDS (FEB 1988)

The Contracting Officer shall, upon his or her own action or upon written request of an authorized representative of the Department of Labor, withhold or cause to be withheld from the Contractor under this contract or any other

Federal contract with the same Prime Contractor, or any other Federally assisted contract subject to Davis-Bacon prevailing wage requirements, which is held by the same Prime Contractor, so much of the accrued payments or advances as may be considered necessary to pay laborers and mechanics, including apprentices, trainees, and helpers, employed by the Contractor or any subcontractor the full amount of wages required by the contract. In the event of failure to pay any laborer or mechanic, including any apprentice, trainee, or helper, employed or working on the site of the work, all or part of the wages required by the contract, the Contracting Officer may, after written notice to the Contractor, take such action as may be necessary to cause the suspension of any further payment, advance, or guarantee of funds until such violations have ceased.

52.222-8 PAYROLLS AND BASIC RECORDS (FEB 1988)

(a) Payrolls and basic records relating thereto shall be maintained by the Contractor during the course of the work and preserved for a period of 3 years thereafter for all laborers and mechanics working at the site of the work. Such records shall contain the name, address, and social security number of each such worker, his or her correct classification, hourly rates of wages paid (including rates of contributions or costs anticipated for bona fide fringe benefits or cash equivalents thereof of the types described in section 1(b)(2)(B) of the Davis-Bacon Act), daily and weekly number of hours worked, deductions made, and actual wages paid. Whenever the Secretary of Labor has found, under paragraph (d) of the clause entitled Davis-Bacon Act, that the wages of any laborer or mechanic include the amount of any costs reasonably anticipated in providing benefits under a plan or program described in section 1(b)(2)(B) of the Davis-Bacon Act, the Contractor shall maintain records which show that the commitment to provide such benefits is enforceable, that the plan or program is financially responsible, and that the plan or program has been communicated in writing to the laborers or mechanics affected, and records which show the costs anticipated or the actual cost incurred in providing such benefits. Contractors employing apprentices or trainees under approved programs shall maintain written evidence of the registration of apprenticeship programs and certification of trainee programs, the registration of the apprentices and trainees, and the ratios and wage rates prescribed in the applicable programs.

(b)(1) The Contractor shall submit weekly for each week in which any contract work is performed a copy of all payrolls to the Contracting Officer. The payrolls submitted shall set out accurately and completely all of the information required to be maintained under paragraph (a) of this clause. This information may be submitted in any form desired. Optional Form WH-347 (Federal Stock Number 029-005-00014-1) is available for this purpose and may be purchased from the Superintendent of Documents, U.S. Government Printing Office, Washington, DC 20402. The Prime Contractor is responsible for the submission of copies of payrolls by all subcontractors.

(2) Each payroll submitted shall be accompanied by a "Statement of Compliance," signed by the Contractor or subcontractor or his or her agent who pays or supervises the payment of the persons employed under the contract and shall certify--

(i) That the payroll for the payroll period contains the information required to be maintained under paragraph (a) of this clause and that such information is correct and complete;

(ii) That each laborer or mechanic (including each helper, apprentice, and trainee) employed on the contract during the payroll period has been paid the full weekly wages earned, without rebate, either directly or indirectly, and that no deductions have been made either directly or indirectly from the full wages earned, other than permissible deductions as set forth in the Regulations, 29 CFR Part 3; and

(iii) That each laborer or mechanic has been paid not less than the applicable wage rates and fringe benefits or cash

equivalents for the classification of work performed, as specified in the applicable wage determination incorporated into the contract.

(3) The weekly submission of a properly executed certification set forth on the reverse side of Optional Form WH-347 shall satisfy the requirement for submission of the "Statement of Compliance" required by subparagraph (b)(2) of this clause.

(4) The falsification of any of the certifications in this clause may subject the Contractor or subcontractor to civil or criminal prosecution under Section 1001 of Title 18 and Section 3729 of Title 31 of the United States Code.

(c) The Contractor or subcontractor shall make the records required under paragraph (a) of this clause available for inspection, copying, or transcription by the Contracting Officer or authorized representatives of the Contracting Officer or the Department of Labor. The Contractor or subcontractor shall permit the Contracting Officer or representatives of the Contracting Officer or the Department of Labor to interview employees during working hours on the job. If the Contractor or subcontractor fails to submit required records or to make them available, the Contracting Officer may, after written notice to the Contractor, take such action as may be necessary to cause the suspension of any further payment. Furthermore, failure to submit the required records upon request or to make such records available may be grounds for debarment action pursuant to 29 CFR 5.12.

52.222-9 APPRENTICES AND TRAINEES (FEB 1988)

(a) Apprentices. Apprentices will be permitted to work at less than the predetermined rate for the work they performed when they are employed pursuant to and individually registered in a bona fide apprenticeship program registered with the U.S. Department of Labor, Employment and Training Administration, Bureau of Apprenticeship and Training, or with a State Apprenticeship Agency recognized by the Bureau, or if a person is employed in his or her first 90 days of probationary employment as an apprentice in such an apprenticeship program, who is not individually registered in the program, but who has been certified by the Bureau of Apprenticeship and Training or a State Apprenticeship Agency (where appropriate) to be eligible for probationary employment as an apprentice. The allowable ratio of apprentices to journeymen on the job site in any craft classification shall not be greater than the ratio permitted to the Contractor as to the entire work force under the registered program. Any worker listed on a payroll at an apprentice wage rate, who is not registered or otherwise employed as stated in this paragraph, shall be paid not less than the applicable wage determination for the classification of work actually performed. In addition, any apprentice performing work on the job site in excess of the ratio permitted under the registered program shall be paid not less than the applicable wage rate on the wage determination for the work actually performed. Where a contractor is performing construction on a project in a locality other than that in which its program is registered, the ratios and wage rates (expressed in percentages of the journeyman's hourly rate) specified in the Contractor's or subcontractor's registered program shall be observed. Every apprentice must be paid at not less than the rate specified in the registered program for the apprentice's level of progress, expressed as a percentage of the journeyman hourly rate specified in the applicable wage determination. Apprentices shall be paid fringe benefits in accordance with the provisions of the apprenticeship program. If the apprenticeship program does not specify fringe benefits, apprentices must be paid the full amount of fringe benefits listed on the wage determination for the applicable classification. If the Administrator determines that a different practice prevails for the applicable apprentice classification, fringes shall be paid in accordance with that determination. In the event the Bureau of Apprenticeship and Training, or a State Apprenticeship Agency recognized by the Bureau, withdraws approval of an apprenticeship program, the Contractor will no longer be permitted to utilize apprentices at less than the applicable predetermined rate for the work performed until an acceptable program is approved.

(b) Trainees. Except as provided in 29 CFR 5.16, trainees will not be permitted to work at less than the predetermined rate for the work performed unless they are employed pursuant to and individually registered in a program which has received prior approval, evidenced by formal certification by the U.S. Department of Labor, Employment and Training Administration. The ratio of trainees to journeymen on the job site shall not be greater than permitted under the plan approved by the Employment and Training Administration. Every trainee must be paid at not less than the rate specified in the approved program for the trainee's level of progress, expressed as a percentage of the journeyman hourly rate specified in the applicable wage determination. Trainees shall be paid fringe benefits in accordance with the provisions of the trainee program. If the trainee program does not mention fringe benefits, trainees shall be paid the full amount of fringe benefits listed in the wage determination unless the Administrator of the Wage and Hour Division determines that there is an apprenticeship program associated with the corresponding journeyman wage rate in the wage determination which provides for less than full fringe benefits for apprentices. Any employee listed on the payroll at a trainee rate who is not registered and participating in a training plan approved by the Employment and Training Administration shall be paid not less than the applicable wage rate in the wage determination for the classification of work actually performed. In addition, any trainee performing work on the job site in excess of the ratio permitted under the registered program shall be paid not less than the applicable wage rate in the wage determination for the work actually performed. In the event the Employment and Training Administration withdraws approval of a training program, the Contractor will no longer be permitted to utilize trainees at less than the applicable predetermined rate for the work performed until an acceptable program is approved.

(c) Equal employment opportunity. The utilization of apprentices, trainees, and journeymen under this clause shall be in conformity with the equal employment opportunity requirements of Executive Order 11246, as amended, and 29 CFR Part 30.

52.222-10 COMPLIANCE WITH COPELAND ACT REQUIREMENTS (FEB 1988)

The Contractor shall comply with the requirements of 29 CFR Part 3, which are hereby incorporated by reference in this contract.

52.222-11 SUBCONTRACTS (LABOR STANDARDS (FEB 1988)

(a) The Contractor or subcontractor shall insert in any subcontracts the clauses entitled Davis-Bacon Act, Contract Work Hours and Safety Standards Act-Overtime Compensation, Apprentices and Trainees, Payrolls and Basic Records, Compliance with Copeland Act Requirements, Withholding of Funds, Subcontracts (Labor Standards), Contract Termination-Debarment, Disputes Concerning Labor Standards, Compliance with Davis-Bacon and Related Act Regulations, and Certification of Eligibility, and such other clauses as the Contracting Officer may, by appropriate instructions, require, and also a clause requiring subcontractors to include these clauses in any lower tier subcontracts. The Prime Contractor shall be responsible for compliance by any subcontractor or lower tier subcontractor with all the contract clauses cited in this paragraph.

(b)(1) Within 14 days after award of the contract, the Contractor shall deliver to the Contracting Officer a completed Statement and Acknowledgment Form (SF 1413) for each subcontract, including the subcontractor's signed and dated acknowledgment that the clauses set forth in paragraph (a) of this clause have been included in the subcontract.

(2) Within 14 days after the award of any subsequently awarded subcontract the Contractor shall deliver to the Contracting Officer an updated completed SF 1413 for such additional subcontract.

52.222-12 CONTRACT TERMINATION--DEBARMENT (FEB 1988)

A breach of the contract clauses entitled Davis-Bacon Act, Contract Work Hours and Safety Standards Act--Overtime Compensation, Apprentices and Trainees, Payrolls and Basic Records, Compliance with Copeland Act Requirements, Subcontracts (Labor Standards), Compliance with Davis-Bacon and Related Act Regulations, or Certification of Eligibility may be grounds for termination of the contract, and for debarment as a Contractor and subcontractor as provided in 29 CFR 5.12.

52.222-13 COMPLIANCE WITH DAVIS-BACON AND RELATED ACT REGULATIONS (FEB 1988)

All rulings and interpretations of the Davis-Bacon and Related Acts contained in 29 CFR Parts 1, 3, and 5 are hereby incorporated by reference in this contract.

52.222-14 DISPUTES CONCERNING LABOR STANDARDS (FEB 1988)

The United States Department of Labor has set forth in 29 CFR Parts 5, 6, and 7 procedures for resolving disputes concerning labor standards requirements. Such disputes shall be resolved in accordance with those procedures and not the Disputes clause of this contract. Disputes within the meaning of this clause include disputes between the Contractor (or any of its subcontractors) and the contracting agency, the U.S. Department of Labor, or the employees or their representatives.

52.222-15 CERTIFICATION OF ELIGIBILITY (FEB 1988)

(a) By entering into this contract, the Contractor certifies that neither it (nor he or she) nor any person or firm who has an interest in the Contractor's firm is a person or firm ineligible to be awarded Government contracts by virtue of section 3(a) of the Davis-Bacon Act or 29 CFR 5.12(a)(1).

(b) No part of this contract shall be subcontracted to any person or firm ineligible for award of a Government contract by virtue of section 3(a) of the Davis-Bacon Act or 29 CFR 5.12(a)(1).

(c) The penalty for making false statements is prescribed in the U.S. Criminal Code, 18 U.S.C. 1001.

52.222-23 NOTICE OF REQUIREMENT FOR AFFIRMATIVE ACTION TO ENSURE EQUAL EMPLOYMENT OPPORTUNITY FOR CONSTRUCTION (FEB 1999)

(a) The offeror's attention is called to the Equal Opportunity clause and the Affirmative Action Compliance Requirements for Construction clause of this solicitation.

(b) The goals for minority and female participation, expressed in percentage terms for the Contractor's aggregate workforce in each trade on all construction work in the covered area, are as follows:

Goals for minority participation for each trade	Goals for female participation for each trade
[Insert Goals]	[Insert Goals]

These goals are applicable to all the Contractor's construction work performed in the covered area. If the Contractor performs construction work in a geographical area located outside of the covered area, the Contractor shall apply the goals established for the geographical area where the work is actually performed. Goals are published periodically in the Federal Register in notice form, and these notices may be obtained from any Office of Federal Contract Compliance Programs office.

(c) The Contractor's compliance with Executive Order 11246, as amended, and the regulations in 41 CFR 60-4 shall be based on (1) its implementation of the Equal Opportunity clause, (2) specific affirmative action obligations required by the clause entitled "Affirmative Action Compliance Requirements for Construction," and (3) its efforts to meet the goals. The hours of minority and female employment and training must be substantially uniform throughout the length of the contract, and in each trade. The Contractor shall make a good faith effort to employ minorities and women evenly on each of its projects. The transfer of minority or female employees or trainees from Contractor to Contractor, or from project to project, for the sole purpose of meeting the Contractor's goals shall be a violation of the contract, Executive Order 11246, as amended, and the regulations in 41 CFR 60-4. Compliance with the goals will be measured against the total work hours performed.

(d) The Contractor shall provide written notification to the Deputy Assistant Secretary for Federal Contract Compliance, U.S. Department of Labor, within 10 working days following award of any construction subcontract in excess of $10,000 at any tier for construction work under the contract resulting from this solicitation. The notification shall list the --

(1) Name, address, and telephone number of the subcontractor;

(2) Employer's identification number of the subcontractor;

(3) Estimated dollar amount of the subcontract;

(4) Estimated starting and completion dates of the subcontract; and

(5) Geographical area in which the subcontract is to be performed.

(e) As used in this Notice, and in any contract resulting from this solicitation, the "covered area" is [Contracting Officer shall insert description of the geographical areas where the contract is to be performed, giving the State, county, and city].

52.222-26 EQUAL OPPORTUNITY (FEB 1999)

(a) If, during any 12-month period (including the 12 months preceding the award of this contract), the Contractor has been or is awarded nonexempt Federal contracts and/or subcontracts that have an aggregate value in excess of $10,000, the Contractor shall comply with subparagraphs (b)(1) through (11) of this clause. Upon request, the

Contractor shall provide information necessary to determine the applicability of this clause.

(b) During performing this contract, the Contractor agrees as follows:

(1) The Contractor shall not discriminate against any employee or applicant for employment because of race, color, religion, sex, or national origin. However, it shall not be a violation of this clause for the Contractor to extend a publicly announced preference in employment to Indians living on or near an Indian reservation, in connection with employment opportunities on or near an Indian reservation, as permitted by 41 CFR 60-1.5.

(2) The Contractor shall take affirmative action to ensure that applicants are employed, and that employees are treated during employment, without regard to their race, color, religion, sex, or national origin. This shall include, but not be limited to, (i) employment, (ii) upgrading, (iii) demotion, (iv) transfer, (v) recruitment or recruitment advertising, (vi) layoff or termination, (vii) rates of pay or other forms of compensation, and (viii) selection for training, including apprenticeship.

(3) The Contractor shall post in conspicuous places available to employees and applicants for employment the notices to be provided by the Contracting Officer that explain this clause.

(4) The Contractor shall, in all solicitations or advertisements for employees placed by or on behalf of the Contractor, state that all qualified applicants will receive consideration for employment without regard to race, color, religion, sex, or national origin.

(5) The Contractor shall send, to each labor union or representative of workers with which it has a collective bargaining agreement or other contract or understanding, the notice to be provided by the Contracting Officer advising the labor union or workers' representative of the Contractor's commitments under this clause, and post copies of the notice in conspicuous places available to employees and applicants for employment.

(6) The Contractor shall comply with Executive Order 11246, as amended, and the rules, regulations, and orders of the Secretary of Labor.

(7) The Contractor shall furnish to the contracting agency all information required by Executive Order 11246, as amended, and by the rules, regulations, and orders of the Secretary of Labor. The Contractor shall also file Standard Form 100 (EEO-1), or any successor form, as prescribed in 41 CFR part 60-1. Unless the Contractor has filed within the 12 months preceding the date of contract award, the Contractor shall, within 30 days after contract award, apply to either the regional Office of Federal Contract Compliance Programs (OFCCP) or the local office of the Equal Employment Opportunity Commission for the necessary forms.

(8) The Contractor shall permit access to its premises, during normal business hours, by the contracting agency or the OFCCP for the purpose of conducting on-site compliance evaluations and complaint investigations. The Contractor shall permit the Government to inspect and copy any books, accounts, records (including computerized records), and other material that may be relevant to the matter under investigation and pertinent to compliance with Executive Order 11246, as amended, and rules and regulations that implement the Executive Order.

(9) If the OFCCP determines that the Contractor is not in compliance with this clause or any rule, regulation, or order of the Secretary of Labor, this contract may be canceled, terminated, or suspended in whole or in part and the Contractor may be declared ineligible for further Government contracts, under the procedures authorized in Executive Order 11246, as amended. In addition, sanctions may be imposed and remedies invoked against the Contractor as provided in Executive Order 11246, as amended; in the rules, regulations, and orders of the Secretary

of Labor; or as otherwise provided by law.

(10) The Contractor shall include the terms and conditions of subparagraphs (b)(1) through (11) of this clause in every subcontract or purchase order that is not exempted by the rules, regulations, or orders of the Secretary of Labor issued under Executive Order 11246, as amended, so that these terms and conditions will be binding upon each subcontractor or vendor.

(11) The Contractor shall take such action with respect to any subcontract or purchase order as the contracting officer may direct as a means of enforcing these terms and conditions, including sanctions for noncompliance; provided, that if the Contractor becomes involved in, or is threatened with, litigation with a subcontractor or vendor as a result of any direction, the Contractor may request the United States to enter into the litigation to protect the interests of the United States.

(c) Notwithstanding any other clause in this contract, disputes relative to this clause will be governed by the procedures in 41 CFR 60-1.1.

52.222-27 AFFIRMATIVE ACTION COMPLIANCE REQUIREMENTS FOR CONSTRUCTION (FEB 1999)

(a) Definitions. "Covered area," as used in this clause, means the geographical area described in the solicitation for this contract.

"Deputy Assistant Secretary," as used in this clause, means Deputy Assistant Secretary for Federal Contract Compliance, U.S. Department of Labor, or a designee.

"Employer's identification number," as used in this clause, means the Federal Social Security number used on the employer's quarterly federal tax return, U.S. Treasury Department Form 941.

"Minority," as used in this clause, means--

(1) American Indian or Alaskan Native (all persons having origins in any of the original peoples of North America and maintaining identifiable tribal affiliations through membership and participation or community identification).

(2) Asian and Pacific Islander (all persons having origins in any of the original peoples of the Far East, Southeast Asia, the Indian Subcontinent, or the Pacific Islands);

(3) Black (all persons having origins in any of the black African racial groups not of Hispanic origin); and

(4) Hispanic (all persons of Mexican, Puerto Rican, Cuban, Central or South American, or other Spanish culture or origin, regardless of race).

(b) If the Contractor, or a subcontractor at any tier, subcontracts a portion of the work involving any construction trade, each such subcontract in excess of $10,000 shall include this clause and the Notice containing the goals for minority and female participation stated in the solicitation for this contract.

(c) If the Contractor is participating in a Hometown Plan (41 CFR 60-4) approved by the U.S. Department of Labor in a covered area, either individually or through an association, its affirmative action obligations on all work in the plan area (including goals) shall comply with the plan for those trades that have unions participating in the plan.

Contractors must be able to demonstrate participation in, and compliance with, the provisions of the plan. Each Contractor or subcontractor participating in an approved plan is also required to comply with its obligations under the Equal Opportunity clause, and to make a good faith effort to achieve each goal under the plan in each trade in which it has employees. The overall good-faith performance by other Contractors or subcontractors toward a goal in an approved plan does not excuse any Contractor's or subcontractor's failure to make good-faith efforts to achieve the plan's goals.

(d) The Contractor shall implement the affirmative action procedures in subparagraphs (g)(1) through (16) of this clause. The goals stated in the solicitation for this contract are expressed as percentages of the total hours of employment and training of minority and female utilization that the Contractor should reasonably be able to achieve in each construction trade in which it has employees in the covered area. If the Contractor performs construction work in a geographical area located outside of the covered area, it shall apply the goals established for the geographical area where that work is actually performed. The Contractor is expected to make substantially uniform progress toward its goals in each craft.

(e) Neither the terms and conditions of any collective bargaining agreement, nor the failure by a union with which the Contractor has a collective bargaining agreement, to refer minorities or women shall excuse the Contractor's obligations under this clause, Executive Order 11246, as amended, or the regulations thereunder.

(f) In order for the nonworking training hours of apprentices and trainees to be counted in meeting the goals, apprentices and trainees must be employed by the Contractor during the training period, and the Contractor must have made a commitment to employ the apprentices and trainees at the completion of their training, subject to the availability of employment opportunities. Trainees must be trained pursuant to training programs approved by the U.S. Department of Labor.

(g) The Contractor shall take affirmative action to ensure equal employment opportunity. The evaluation of the Contractor's compliance with this clause shall be based upon its effort to achieve maximum results from its actions. The Contractor shall document these efforts fully and implement affirmative action steps at least as extensive as the following:

(1) Ensure a working environment free of harassment, intimidation, and coercion at all sites and in all facilities where the Contractor's employees are assigned to work. The Contractor, if possible, will assign two or more women to each construction project. The Contractor shall ensure that foremen, superintendents, and other onsite supervisory personnel are aware of and carry out the Contractor's obligation to maintain such a working environment, with specific attention to minority or female individuals working at these sites or facilities.

(2) Establish and maintain a current list of sources for minority and female recruitment. Provide written notification to minority and female recruitment sources and community organizations when the Contractor or its unions have employment opportunities available, and maintain a record of the organizations' responses.

(3) Establish and maintain a current file of the names, addresses, and telephone numbers of each minority and female off-the-street applicant, referrals of minorities or females from unions, recruitment sources, or community organizations, and the action taken with respect to each individual. If an individual was sent to the union hiring hall for referral and not referred back to the Contractor by the union or, if referred back, not employed by the Contractor, this shall be documented in the file, along with whatever additional actions the Contractor may have taken.

(4) Immediately notify the Deputy Assistant Secretary when the union or unions with which the Contractor has a

collective bargaining agreement has not referred back to the Contractor a minority or woman sent by the Contractor, or when the Contractor has other information that the union referral process has impeded the Contractor's efforts to meet its obligations.

(5) Develop on-the-job training opportunities and/or participate in training programs for the area that expressly include minorities and women, including upgrading programs and apprenticeship and trainee programs relevant to the Contractor's employment needs, especially those programs funded or approved by the Department of Labor. The Contractor shall provide notice of these programs to the sources compiled under subparagraph (g)(2) of this clause.

(6) Disseminate the Contractor's equal employment policy by--

(i) Providing notice of the policy to unions and to training, recruitment, and outreach programs, and requesting their cooperation in assisting the Contractor in meeting its contract obligations;

(ii) Including the policy in any policy manual and in collective bargaining agreements;

(iii) Publicizing the policy in the company newspaper, annual report, etc.;

(iv) Reviewing the policy with all management personnel and with all minority and female employees at least once a year; and

(v) Posting the policy on bulletin boards accessible to employees at each location where construction work is performed.

(7) Review, at least annually, the Contractor's equal employment policy and affirmative action obligations with all employees having responsibility for hiring, assignment, layoff, termination, or other employment decisions. Conduct review of this policy with all on-site supervisory personnel before initiating construction work at a job site. A written record shall be made and maintained identifying the time and place of these meetings, persons attending, subject matter discussed, and disposition of the subject matter.

(8) Disseminate the Contractor's equal employment policy externally by including it in any advertising in the news media, specifically including minority and female news media. Provide written notification to, and discuss this policy with, other Contractors and subcontractors with which the Contractor does or anticipates doing business.

(9) Direct recruitment efforts, both oral and written, to minority, female, and community organizations, to schools with minority and female students, and to minority and female recruitment and training organizations serving the Contractor's recruitment area and employment needs. Not later than 1 month before the date for acceptance of applications for apprenticeship or training by any recruitment source, send written notification to organizations such as the above, describing the openings, screening procedures, and tests to be used in the selection process.

(10) Encourage present minority and female employees to recruit minority persons and women. Where reasonable, provide after-school, summer, and vacation employment to minority and female youth both on the site and in other areas of the Contractor's workforce.

(11) Validate all tests and other selection requirements where required under 41 CFR 60-3.

(12) Conduct, at least annually, an inventory and evaluation at least of all minority and female personnel for promotional opportunities. Encourage these employees to seek or to prepare for, through appropriate training, etc.,

opportunities for promotion.

(13) Ensure that seniority practices, job classifications, work assignments, and other personnel practices do not have a discriminatory effect by continually monitoring all personnel and employment-related activities to ensure that the Contractor's obligations under this contract are being carried out.

(14) Ensure that all facilities and company activities are nonsegregated except that separate or single-user rest rooms and necessary dressing or sleeping areas shall be provided to assure privacy between the sexes.

(15) Maintain a record of solicitations for subcontracts for minority and female construction contractors and suppliers, including circulation of solicitations to minority and female contractor associations and other business associations.

(16) Conduct a review, at least annually, of all supervisors' adherence to and performance under the Contractor's equal employment policy and affirmative action obligations.

(h) The Contractor is encouraged to participate in voluntary associations that may assist in fulfilling one or more of the affirmative action obligations contained in subparagraphs (g)(1) through (16) of this clause. The efforts of a contractor association, joint contractor-union, contractor-community, or similar group of which the contractor is a member and participant may be asserted as fulfilling one or more of its obligations under subparagraphs (g)(1) through (16) of this clause, provided the Contractor--

(1) Actively participates in the group;

(2) Makes every effort to ensure that the group has a positive impact on the employment of minorities and women in the industry;

(3) Ensures that concrete benefits of the program are reflected in the Contractor's minority and female workforce participation;

(4) Makes a good-faith effort to meet its individual goals and timetables; and

(5) Can provide access to documentation that demonstrates the effectiveness of actions taken on behalf of the Contractor. The obligation to comply is the Contractor's, and failure of such a group to fulfill an obligation shall not be a defense for the Contractor's noncompliance.

(i) A single goal for minorities and a separate single goal for women shall be established. The Contractor is required to provide equal employment opportunity and to take affirmative action for all minority groups, both male and female, and all women, both minority and nonminority. Consequently, the Contractor may be in violation of Executive Order 11246, as amended, if a particular group is employed in a substantially disparate manner.

(j) The Contractor shall not use goals or affirmative action standards to discriminate against any person because of race, color, religion, sex, or national origin.

(k) The Contractor shall not enter into any subcontract with any person or firm debarred from Government contracts under Executive Order 11246, as amended.

(l) The Contractor shall carry out such sanctions and penalties for violation of this clause and of the Equal

Opportunity clause, including suspension, termination, and cancellation of existing subcontracts, as may be imposed or ordered under Executive Order 11246, as amended, and its implementing regulations, by the OFCCP. Any failure to carry out these sanctions and penalties as ordered shall be a violation of this clause and Executive Order 11246, as amended.

(m) The Contractor in fulfilling its obligations under this clause shall implement affirmative action procedures at least as extensive as those prescribed in paragraph (g) of this clause, so as to achieve maximum results from its efforts to ensure equal employment opportunity. If the Contractor fails to comply with the requirements of Executive Order 11246, as amended, the implementing regulations, or this clause, the Deputy Assistant Secretary shall take action as prescribed in 41 CFR 60-4.8.

(n) The Contractor shall designate a responsible official to--

(1) Monitor all employment-related activity to ensure that the Contractor's equal employment policy is being carried out;

(2) Submit reports as may be required by the Government; and

(3) Keep records that shall at least include for each employee the name, address, telephone number, construction trade, union affiliation (if any), employee identification number, social security number, race, sex, status (e.g., mechanic, apprentice, trainee, helper, or laborer), dates of changes in status, hours worked per week in the indicated trade, rate of pay, and locations at which the work was performed. Records shall be maintained in an easily understandable and retrievable form; however, to the degree that existing records satisfy this requirement, separate records are not required to be maintained.

Nothing contained herein shall be construed as a limitation upon the application of other laws that establish different standards of compliance or upon the requirements for the hiring of local or other area residents (e.g., those under the Public Works Employment Act of 1977 and the Community Development Block Grant Program).

52.222-35 AFFIRMATIVE ACTION FOR DISABLED VETERANS AND VETERANS OF THE VIETNAM ERA (APR 1998)

(a)) Definitions. As used in this clause--

All employment openings includes all positions except executive and top management, those positions that will be filled from within the contractor's organization, and positions lasting 3 days or less. This term includes full-time employment, temporary employment of more than 3 days' duration, and part-time employment.

Appropriate office of the State employment service system means the local office of the Federal-State national system of public employment offices with assigned responsibility to serve the area where the employment opening is to be filled, including the District of Columbia, Guam, the Commonwealth of Puerto Rico, and the Virgin Islands.

Positions that will be filled from within the Contractor's organization means employment openings for which no consideration will be given to persons outside the Contractor's organization (including any affiliates, subsidiaries, and parent companies) and includes any openings that the Contractor proposes to fill from regularly established ''recall" lists. The exception does not apply to a particular opening once an employer decides to consider applicants outside of its organization.

Veteran of the Vietnam era means a person who--

(1) Served on active duty for a period of more than 180 days, any part of which occurred between August 5, 1964, and May 7, 1975, and was discharged or released therefrom with other than a dishonorable discharge; or

(2) Was discharged or released from active duty for a service-connected disability if any part of such active duty was performed between August 5, 1964, and May 7, 1975.

(b) General. (1) Regarding any position for which the employee or applicant for employment is qualified, the Contractor shall not discriminate against the individual because the individual is a disabled veteran or a veteran of the Vietnam era. The Contractor agrees to take affirmative action to employ, advance in employment, and otherwise treat qualified disabled veterans and veterans of the Vietnam era without discrimination based upon their disability or veterans' status in all employment practices such as--

(i) Employment;

(ii) Upgrading;

(iii) Demotion or transfer;

(iv) Recruitment;

(v) Advertising;

(vi) Layoff or termination;

(vii) Rates of pay or other forms of compensation; and

(viii) Selection for training, including apprenticeship.

(2) The Contractor agrees to comply with the rules, regulations, and relevant orders of the Secretary of Labor (Secretary) issued under the Vietnam Era Veterans' Readjustment Assistance Act of 1972 (the Act), as amended.

(c) Listing openings. (1) The Contractor agrees to list all employment openings existing at contract award or occurring during contract performance, at an appropriate office of the State employment service system in the locality where the opening occurs. These openings include those occurring at any Contractor facility, including one not connected with performing this contract. An independent corporate affiliate is exempt from this requirement.

(2) State and local government agencies holding Federal contracts of $10,000 or more shall also list all their employment openings with the appropriate office of the State employment service.

(3) The listing of employment openings with the State employment service system is required at least concurrently with using any other recruitment source or effort and involves the obligations of placing a bona fide job order, including accepting referrals of veterans and nonveterans. This listing does not require hiring any particular job applicant or hiring from any particular group of job applicants and is not intended to relieve the Contractor from any requirements of Executive orders or regulations concerning nondiscrimination in employment.

(4) Whenever the Contractor becomes contractually bound to the listing terms of this clause, it shall advise the State employment service system, in each State where it has establishments, of the name and location of each hiring location in the State. As long as the Contractor is contractually bound to these terms and has so advised the State system, it need not advise the State system of subsequent contracts. The Contractor may advise the State system when it is no longer bound by this contract clause.

(d) Applicability. This clause does not apply to the listing of employment openings that occur and are filled outside the 50 States, the District of Columbia, the Commonwealth of Puerto Rico, Guam, and the Virgin Islands.

(e) Postings. (1) The Contractor agrees to post employment notices stating (i) the Contractor's obligation under the law to take affirmative action to employ and advance in employment qualified disabled veterans and veterans of the Vietnam era, and (ii) the rights of applicants and employees.

(2) These notices shall be posted in conspicuous places that are available to employees and applicants for employment. They shall be in a form prescribed by the Deputy Assistant Secretary for Federal Contract Compliance Programs, Department of Labor (Deputy Assistant Secretary), and provided by or through the Contracting Officer.

(3) The Contractor shall notify each labor union or representative of workers with which it has a collective bargaining agreement or other contract understanding, that the Contractor is bound by the terms of the Act, and is committed to take affirmative action to employ, and advance in employment, qualified disabled veterans and veterans of the Vietnam Era.

(f) Noncompliance. If the Contractor does not comply with the requirements of this clause, appropriate actions may be taken under the rules, regulations, and relevant orders of the Secretary issued pursuant to the Act.

(g) Subcontracts. The Contractor shall include the terms of this clause in every subcontract or purchase order of $10,000 or more unless exempted by rules, regulations, or orders of the Secretary. The Contractor shall act as specified by the Deputy Assistant Secretary to enforce the terms, including action for noncompliance.

(End of clause)

52.222-36 AFFIRMATIVE ACTION FOR WORKERS WITH DISABILITIES (JUN 1998)

(a) General. (1) Regarding any position for which the employee or applicant for employment is qualified, the Contractor shall not discriminate against any employee or applicant because of physical or mental disability. The Contractor agrees to take affirmative action to employ, advance in employment, and otherwise treat qualified individuals with disabilities without discrimination based upon their physical or mental disability in all employment practices such as--

(i) Recruitment, advertising, and job application procedures;

(ii) Hiring, upgrading, promotion, award of tenure, demotion, transfer, layoff, termination, right of return from layoff, and rehiring;

(iii) Rates of pay or any other form of compensation and changes in compensation;

(iv) Job assignments, job classifications, organizational structures, position descriptions, lines of progression, and seniority lists;

(v) Leaves of absence, sick leave, or any other leave;

(vi) Fringe benefits available by virtue of employment, whether or not administered by the Contractor;

(vii) Selection and financial support for training, including apprenticeships, professional meetings, conferences, and other related activities, and selection for leaves of absence to pursue training;

(viii) Activities sponsored by the Contractor, including social or recreational programs; and

(ix) Any other term, condition, or privilege of employment.

(2) The Contractor agrees to comply with the rules, regulations, and relevant orders of the Secretary of Labor (Secretary) issued under the Rehabilitation Act of 1973 (29 U.S.C. 793) (the Act), as amended.

(b) Postings. (1) The Contractor agrees to post employment notices stating--

(i) The Contractor's obligation under the law to take affirmative action to employ and advance in employment qualified individuals with disabilities; and

(ii) The rights of applicants and employees.

(2) These notices shall be posted in conspicuous places that are available to employees and applicants for employment. The Contractor shall ensure that applicants and employees with disabilities are informed of the contents of the notice (e.g., the Contractor may have the notice read to a visually disabled individual, or may lower the posted notice so that it might be read by a person in a wheelchair). The notices shall be in a form prescribed by the Deputy Assistant Secretary for Federal Contract Compliance of the U.S. Department of Labor (Deputy Assistant Secretary) and shall be provided by or through the Contracting Officer.

(3) The Contractor shall notify each labor union or representative of workers with which it has a collective bargaining agreement or other contract understanding, that the Contractor is bound by the terms of Section 503 of the Act and is committed to take affirmative action to employ, and advance in employment, qualified individuals with physical or mental disabilities.

(c) Noncompliance. If the Contractor does not comply with the requirements of this clause, appropriate actions may be taken under the rules, regulations, and relevant orders of the Secretary issued pursuant to the Act.

(d) Subcontracts. The Contractor shall include the terms of this clause in every subcontract or purchase order in excess of $10,000 unless exempted by rules, regulations, or orders of the Secretary. The Contractor shall act as specified by the Deputy Assistant Secretary to enforce the terms, including action for noncompliance.

(End of clause)

52.222-37 EMPLOYMENT REPORTS ON DISABLED VETERANS AND VETERANS OF THE VIETNAM ERA (JAN 1999)

(a) Unless the Contractor is a State or local government agency, the Contractor shall report at least annually, as required by the Secretary of Labor, on--

(1) The number of disabled veterans and the number of veterans of the Vietnam era in the workforce of the contractor by job category and hiring location; and

(2) The total number of new employees hired during the period covered by the report, and of that total, the number of disabled veterans, and the number of veterans of the Vietnam era.

(b) The above items shall be reported by completing the form entitled "Federal Contractor Veterans' Employment Report VETS-100."

(c) Reports shall be submitted no later than September 30 of each year beginning September 30, 1988.

(d) The employment activity report required by paragraph (a)(2) of this clause shall reflect total hires during the most recent 12-month period as of the ending date selected for the employment profile report required by paragraph (a)(1) of this clause. Contractors may select an ending date: (1) As of the end of any pay period during the period January through March 1st of the year the report is due, or (2) as of December 31, if the contractor has previous written approval from the Equal Employment Opportunity Commission to do so for purposes of submitting the Employer Information Report EEO-1 (Standard Form 100).

(e) The count of veterans reported according to paragraph (a) of this clause shall be based on voluntary disclosure. Each Contractor subject to the reporting requirements at 38 U.S.C. 4212 shall invite all disabled veterans and veterans of the Vietnam era who wish to benefit under the affirmative action program at 38 U.S.C. 4212 to identify themselves to the Contractor. The invitation shall state that the information is voluntarily provided; that the information will be kept confidential; that disclosure or refusal to provide the information will not subject the applicant or employee to any adverse treatment; and that the information will be used only in accordance with the regulations promulgated under 38 U.S.C. 4212.

(f) Subcontracts. The Contractor shall include the terms of this clause in every subcontract or purchase order of $10,000 or more unless exempted by rules, regulations, or orders of the Secretary.

(End of clause)

52.223-2 CLEAN AIR AND WATER (APR 1984)

(a) "Air Act," as used in this clause, means the Clean Air Act (42 U.S.C. 7401, et seq.).

"Clean air standards," as used in this clause, means--

(1) Any enforceable rules, regulations, guidelines, standards, limitations, orders, controls, prohibitions, work practices, or other requirements contained in, issued under, or otherwise adopted under the Air Act or Executive Order 11738;

(2) An applicable implementation plan as described in section 110(d) of the Air Act (42 U.S.C. 7410(d));

(3) An approved implementation procedure or plan under section 111(c) or section 111(d) of the Air Act (42 U.S.C. 7411(c) or (d)); or

(4) An approved implementation procedure under section 112(d) of the Air Act (42 U.S.C. 7412(d)).

"Clean water standards," as used in this clause, means any enforceable limitation, control, condition, prohibition, standard, or other requirement promulgated under the Water Act or contained in a permit issued to a discharger by the EPA or by a State under an approved program, as authorized by section 402 of the Water Act (33 U.S.C. 1342), or by local government to ensure compliance with pretreatment regulations as required by section 307 of the Water Act (33 U.S.C. 1317).

"Compliance," as used in this clause, means compliance with--

(1) Clean air or water standards; or

(2) A schedule or plan ordered or approved by a court of competent jurisdiction, the EPA, or an air or water pollution control agency under the requirements of the Air Act or Water Act and related regulations.

"Facility," as used in this clause, means any building, plant, installation, structure, mine, vessel or other floating craft, location, or site of operations, owned, leased, or supervised by a Contractor or subcontractor, used in the performance of a contract or subcontract. When a location or site of operations includes more than one building, plant, installation, or structure, the entire location or site shall be deemed a facility except when the Administrator, or a designee, of the EPA determines that independent facilities are collocated in one geographical area.

"Water Act," as used in this clause, means Clean Water Act (33 U.S.C. 1251, et seq.).

(b) The Contractor agrees--

(1) To comply with the requirements of section 114 of the Clean Air Act (42 U.S.C. 7414) and section 308 of the Clean Water Act (33 U.S.C. 1318) relating to inspection, monitoring, entry, reports, and information, as well as other requirements specified in section 114 and section 308 of the Air Act and the Water Act, and all regulations and guidelines issued to implement those acts before the award of this contract;

(2) That no portion of the work required by this prime contract will be performed in a facility listed on the EPA List of Violating Facilities on the date when this contract was awarded unless and until the EPA eliminates the name of the facility from the listing;

(3) To use best efforts to comply with clean air standards and clean water standards at the facility in which the contract is being performed; and

(4) To insert the substance of this clause into any nonexempt subcontract, including this subparagraph (b)(4).

(End of clause)

52.223-3 HAZARDOUS MATERIAL IDENTIFICATION AND MATERIAL SAFETY DATA (JAN 1997)

(a) "Hazardous material", as used in this clause, includes any material defined as hazardous under the latest version of Federal Standard No. 313 (including revisions adopted during the term of the contract).

(b) The offeror must list any hazardous material, as defined in paragraph (a) of this clause, to be delivered under this contract. The hazardous material shall be properly identified and include any applicable identification number, such as National Stock Number or Special Item Number. This information shall also be included on the Material Safety

Data Sheet submitted under this contract.

Material (If none, insert "None")	Identification No.
_____	_____
_____	_____
_____	_____

(c) This list must be updated during performance of the contract whenever the Contractor determines that any other material to be delivered under this contract is hazardous.

(d) The apparently successful offeror agrees to submit, for each item as required prior to award, a Material Safety Data Sheet, meeting the requirements of 29 CFR 1910.1200(g) and the latest version of Federal Standard No. 313, for all hazardous material identified in paragraph (b) of this clause. Data shall be submitted in accordance with Federal Standard No. 313, whether or not the apparently successful offeror is the actual manufacturer of these items. Failure to submit the Material Safety Data Sheet prior to award may result in the apparently successful offeror being considered nonresponsible and ineligible for award.

(e) If, after award, there is a change in the composition of the item(s) or a revision to Federal Standard No. 313, which renders incomplete or inaccurate the data submitted under paragraph (d) of this clause, the Contractor shall promptly notify the Contracting Officer and resubmit the data.

(f) Neither the requirements of this clause nor any act or failure to act by the Government shall relieve the Contractor of any responsibility or liability for the safety of Government, Contractor, or subcontractor personnel or property.

(g) Nothing contained in this clause shall relieve the Contractor from complying with applicable Federal, State, and local laws, codes, ordinances, and regulations (including the obtaining of licenses and permits) in connection with hazardous material.

(h) The Government's rights in data furnished under this contract with respect to hazardous material are as follows:

(1) To use, duplicate and disclose any data to which this clause is applicable. The purposes of this right are to--

(i) Apprise personnel of the hazards to which they may be exposed in using, handling, packaging, transporting, or disposing of hazardous materials;

(ii) Obtain medical treatment for those affected by the material; and

(iii) Have others use, duplicate, and disclose the data for the Government for these purposes.

(2) To use, duplicate, and disclose data furnished under this clause, in accordance with subparagraph (h)(1) of this clause, in precedence over any other clause of this contract providing for rights in data.

(3) The Government is not precluded from using similar or identical data acquired from other sources.

(End of clause)

52.223-6 DRUG-FREE WORKPLACE (JAN 1997)

(a) Definitions. As used in this clause --

"Controlled substance" means a controlled substance in schedules I through V of section 202 of the Controlled Substances Act (21 U.S.C. 812) and as further defined in regulation at 21 CFR 1308.11 - 1308.15.

"Conviction" means a finding of guilt (including a plea of nolo contendere) or imposition of sentence, or both, by any judicial body charged with the responsibility to deter- mine violations of the Federal or State criminal drug statutes.

"Criminal drug statute" means a Federal or non-Federal criminal statute involving the manufacture, distribution, dispensing, possession, or use of any controlled substance.

"Drug-free workplace" means the site(s) for the performance of work done by the Contractor in connection with a specific contract at which employees of the Contractor are prohibited from engaging in the unlawful manufacture, distribution, dispensing, possession, or use of a controlled substance.

"Employee" means an employee of a Contractor directly engaged in the performance of work under a Government contract. "Directly engaged" is defined to include all direct cost employees and any other Contractor employee who has other than a minimal impact or involvement in contract performance.

"Individual" means an offeror/contractor that has no more than one employee including the offeror/contractor.

(b) The Contractor, if other than an individual, shall-- within 30 days after award (unless a longer period is agreed to in writing for contracts of 30 days or more performance duration), or as soon as possible for contracts of less than 30 days performance duration--

(1) Publish a statement notifying its employees that the unlawful manufacture, distribution, dispensing, possession, or use of a controlled substance is prohibited in the Contractor’s workplace and specifying the actions that will be taken against employees for violations of such prohibition;

(2) Establish an ongoing drug-free awareness program to inform such employees about--

(i) The dangers of drug abuse in the workplace;

(ii) The Contractor’s policy of maintaining a drug-free workplace;

(iii) Any available drug counseling, rehabilitation, and employee assistance programs; and

(iv) The penalties that may be imposed upon employees for drug abuse violations occurring in the workplace;

(3) Provide all employees engaged in performance of the contract with a copy of the statement required by subparagraph (b)(1) of this clause;

(4) Notify such employees in writing in the statement required by subparagraph (b)(1) of this clause that, as a condition of continued employment on this contract, the employee will--

(i) Abide by the terms of the statement; and

(ii) Notify the employer in writing of the employee's conviction under a criminal drug statute for a violation occurring in the workplace no later than 5 days after such conviction.

(5) Notify the Contracting Officer in writing within 10 days after receiving notice under subdivision (b)(4)(ii) of this clause, from an employee or otherwise receiving actual notice of such conviction. The notice shall include the position title of the employee;

(6) Within 30 days after receiving notice under subdivision (b)(4)(ii) of this clause of a conviction, take one of the following actions with respect to any employee who is convicted of a drug abuse violation occurring in the workplace:

(i) Taking appropriate personnel action against such employee, up to and including termination; or

(ii) Require such employee to satisfactorily participate in a drug abuse assistance or rehabilitation program approved for such purposes by a Federal, State, or local health, law enforcement, or other appropriate agency; and

(7) Make a good faith effort to maintain a drug-free workplace through implementation of subparagraphs (b)(1) though (b)(6) of this clause.

(c) The Contractor, if an individual, agrees by award of the contract or acceptance of a purchase order, not to engage in the unlawful manufacture, distribution, dispensing, possession, or use of a controlled substance while performing this contract.

(d) In addition to other remedies available to the Government, the Contractor's failure to comply with the requirements of paragraph (b) or (c) of this clause may, pursuant to FAR 23.506, render the Contractor subject to suspension of contract payments, termination of the contract for default, and suspension or debarment.

(End of clause)

52.223-5 POLLUTION PREVENTION AND RIGHT-TO-KNOW INFORMATION (APR 1998)

(a) Executive Order 12856 of August 3, 1993, requires Federal facilities to comply with the provisions of the Emergency Planning and Community Right-to-Know Act of 1986 (EPCRA)(42 U.S.C. 11001-11050) and the Pollution Prevention Act of 1990 (PPA)(42 U.S.C. 13101-13109).

(b) The Contractor shall provide all information needed by the Federal facility to comply with the emergency planning reporting requirements of Section 302 of EPCRA; the emergency notice requirements of Section 304 of EPCRA; the list of Material Safety Data Sheets required by Section 311 of EPCRA; the emergency and hazardous chemical inventory forms of Section 312 of EPCRA; the toxic chemical release inventory of Section 313 of EPCRA, which includes the reduction and recycling information required by Section 6607 of PPA; and the toxic chemical reduction goals requirements of Section 3-302 of Executive Order 12856.

52.225-11 BUY AMERICAN ACT--BALANCE OF PAYMENTS PROGRAM--CONSTRUCTION MATERIALS UNDER TRADE AGREEMENTS (FEB 2000)

(a) Definitions. As used in this clause--

Component means any article, material, or supply incorporated directly into construction materials.

Construction material means an article, material, or supply brought to the construction site by the Contractor or subcontractor for incorporation into the building or work. The term also includes an item brought to the site preassembled from articles, materials, or supplies. However, emergency life safety systems, such as emergency lighting, fire alarm, and audio evacuation systems, that are discrete systems incorporated into a public building or work and that are produced as complete systems, are evaluated as a single and distinct construction material regardless of when or how the individual parts or components of those systems are delivered to the construction site. Materials purchased directly by the Government are supplies, not construction material.

Cost of components means--

(1) For components purchased by the Contractor, the acquisition cost, including transportation costs to the place of incorporation into the end product (whether or not such costs are paid to a domestic firm), and any applicable duty (whether or not a duty-free entry certificate is issued); or

(2) For components manufactured by the Contractor, all costs associated with the manufacture of the component, including transportation costs as described in paragraph (1) of this definition, plus allocable overhead costs, but excluding profit. Cost of components does not include any costs associated with the manufacture of the end product.

Designated country means any of the following countries: Aruba, Austria, Bangladesh, Belgium, Benin, Bhutan, Botswana, Burkina Faso, Burundi, Canada, Cape Verde, Central African Republic, Chad, Comoros, Denmark.

Djibouti, Equatorial Guinea, Finland, France, Gambia, Germany, Greece, Guinea, Guinea-Bissau, Haiti, Hong Kong, Ireland, Israel, Italy, Japan.

Kiribati, Korea, Republic of, Lesotho, Liechtenstein, Luxembourg, Malawi, Maldives, Mali, Mozambique, Nepal, Netherlands, Niger, Norway, Portugal, Rwanda.

Sao Tome and Principe, Sierra Leone, Singapore, Somalia, Spain, Sweden, Switzerland, Tanzania U.R., Togo, Tuvalu, Uganda, United Kingdom, Vanuatu, Western Samoa, Yemen.

Designated country construction material means a construction material that--

(1) Is wholly the growth, product, or manufacture of a designated country; or

(2) In the case of a construction material that consists in whole or in part of materials from another country, has been substantially transformed in a designated country into a new and different construction material distinct from the materials from which it was transformed.

Domestic construction material means--

(1) An unmanufactured construction material mined or produced in the United States; or

(2) A construction material manufactured in the United States, if the cost of its components mined, produced, or manufactured in the United States exceeds 50 percent of the cost of all its components. Components of foreign origin of the same class or kind for which nonavailability determinations have been made are treated as domestic.

Foreign construction material means a construction material other than a domestic construction material.

North American Free Trade Agreement country means Canada or Mexico.

North American Free Trade Agreement country construction material means a construction material that--

(1) Is wholly the growth, product, or manufacture of a North American Free Trade Agreement (NAFTA) country; or

(2) In the case of a construction material that consists in whole or in part of materials from another country, has been substantially transformed in a NAFTA country into a new and different construction material distinct from the materials from which it was transformed.

United States means the 50 States and the District of Columbia, U.S. territories and possessions, Puerto Rico, the Northern Mariana Islands, and any other place subject to U.S. jurisdiction, but does not include leased bases.

(b) Construction materials. (1) This clause implements the Buy American Act (41 U.S.C. 10a-10d) and the Balance of Payments Program by providing a preference for domestic construction material. In addition, the Contracting Officer has determined that the Trade Agreements Act and the North American Free Trade Agreement (NAFTA) apply to this acquisition. Therefore, the Buy American Act and Balance of Payments Program restrictions are waived for designated country and NAFTA country construction materials.

(2) The Contractor shall use only domestic, designated country, or NAFTA country construction material in performing this contract, except as provided in paragraphs (b)(3) and (b)(4) of this clause.

(3) The requirement in paragraph (b)(2) of this clause does not apply to the construction materials or components listed by the Government as follows: [Contracting Officer to list applicable excepted materials or indicate ‘‘none”]

(4) The Contracting Officer may add other foreign construction material to the list in paragraph (b)(3) of this clause if the Government determines that--

(i) The cost of domestic construction material would be unreasonable. The cost of a particular domestic construction material subject to the restrictions of the Buy American Act is unreasonable when the cost of such material exceeds the cost of foreign material by more than 6 percent. For determination of unreasonable cost under the Balance of Payments Program, the Contracting Officer will use a factor of 50 percent;

(ii) The application of the restriction of the Buy American Act or Balance of Payments Program to a particular construction material would be impracticable or inconsistent with the public interest; or

(iii) The construction material is not mined, produced, or manufactured in the United States in sufficient and reasonably available commercial quantities of a satisfactory quality.

(c) Request for determination of inapplicability of the Buy American Act or Balance of Payments Program. (1)(i) Any Contractor request to use foreign construction material in accordance with paragraph (b)(4) of this clause shall include adequate information for Government evaluation of the request, including--

(A) A description of the foreign and domestic construction materials;

(B) Unit of measure;

(C) Quantity;

(D) Price;

(E) Time of delivery or availability;

(F) Location of the construction project;

(G) Name and address of the proposed supplier; and

(H) A detailed justification of the reason for use of foreign construction materials cited in accordance with paragraph (b)(3) of this clause.

(ii) A request based on unreasonable cost shall include a reasonable survey of the market and a completed price comparison table in the format in paragraph (d) of this clause.

(iii) The price of construction material shall include all delivery costs to the construction site and any applicable duty (whether or not a duty-free certificate may be issued).

(iv) Any Contractor request for a determination submitted after contract award shall explain why the Contractor could not reasonably foresee the need for such determination and could not have requested the determination before contract award. If the Contractor does not submit a satisfactory explanation, the Contracting Officer need not make a determination.

(2) If the Government determines after contract award that an exception to the Buy American Act or Balance of Payments Program applies and the Contracting Officer and the Contractor negotiate adequate consideration, the Contracting Officer will modify the contract to allow use of the foreign construction material. However, when the basis for the exception is the unreasonable price of a domestic construction material, adequate consideration is not less than the differential established in paragraph (b)(4)(i) of this clause.

(3) Unless the Government determines that an exception to the Buy American Act or Balance of Payments Program applies, use of foreign construction material is noncompliant with the Buy American Act or Balance of Payments Program.

(d) Data. To permit evaluation of requests under paragraph (c) of this clause based on unreasonable cost, the Contractor shall include the following information and any applicable supporting data based on the survey of suppliers:

Foreign and Domestic Construction Materials Price Comparison

Construction material description	Unit of measure	Quantity	Price (dollars) \1\
Item 1:			
Foreign construction material....	.....	.....	.....
Domestic construction material...	.....	.....	.....
Item 2:			
Foreign construction material....	.....	.....	.....
Domestic construction material...	.....	.....	.....

\1\ Include all delivery costs to the construction site and any applicable duty (whether or not a duty-free entry certificate is issued).

List name, address, telephone number, and contact for suppliers surveyed. Attach copy of response; if oral, attach summary.

Include other applicable supporting information.

(End of clause)

52.223-14 TOXIC CHEMICAL RELEASE REPORTING (OCT 1996)

(a) Unless otherwise exempt, the Contractor, as owner or operator of a facility used in the performance of this contract, shall file by July 1 for the prior calendar year an annual Toxic Chemical Release Inventory Form (Form R) as described in sections 313(a) and (g) of the Emergency Planning and Community Right-to-Know Act of 1986 (EPCRA) (42 U.S.C. 11023(a) and (g)), and section 6607 of the Pollution Prevention Act of 1990 (PPA) (42 U.S.C. 13106). The Contractor shall file, for each facility subject to the Form R filing and reporting requirements, the annual Form R throughout the life of the contract.

(b) A Contractor owned or operated facility used in the performance of this contract is exempt from the requirement to file an annual Form R if--

(1) The facility does not manufacture, process, or otherwise use any toxic chemicals listed under section 313(c) of EPCRA, 42 U.S.C. 11023(c);

(2) The facility does not have 10 or more full-time employees as specified in section 313(b)(1)(A) of EPCRA, 42 U.S.C. 11023(b)(1)(A);

(3) The facility does not meet the reporting thresholds of toxic chemicals established under of EPCRA, 42 U.S.C. 11023(f) (including the alternate thresholds at 40 CFR 372.27, provided an appropriate certification form has been filed with EPA);

(4) The facility does not fall within Standard Industrial Classification Code (SIC) designations 20 through 39 as set forth in section 19.102 of the Federal Acquisition Regulation (FAR); or

(5) The facility is not located within any State of the United States, the District of Columbia, the Commonwealth of Puerto Rico, Guam, American Samoa, the United States Virgin Islands, the Northern Mariana Islands, or any other territory or possession over which the United States has jurisdiction.

(c) If the Contractor has certified to an exemption in accordance with one or more of the criteria in paragraph (b) of this clause, and after award of the contract circumstances change so that any of its owned or operated facilities used in the performance of this contract is no longer exempt--

(1) The Contractor shall notify the Contracting Officer; and

(2) The Contractor, as owner or operator of a facility used in the performance of this contract that is no longer exempt, shall (i) submit a Toxic Chemical Release Inventory Form (Form R) on or before July 1 for the prior calendar year during which the facility becomes eligible; and (ii) continue to file the annual Form R for the life of the contract for such facility.

(d) The Contracting Officer may terminate this contract or take other action as appropriate, if the Contractor fails to comply accurately and fully with the EPCRA and PPA toxic chemical release filing and reporting requirements.

(e) Except for acquisitions of commercial items, as defined in FAR Part 2, the Contractor shall--

(1) For competitive subcontracts expected to exceed $100,000 (including all options), include a solicitation provision substantially the same as the provision at FAR 52.223-13, Certification of Toxic Chemical Release Reporting; and

(2) Include in any resultant subcontract exceeding $100,000 (including all options), the substance of this clause, except this paragraph (e).

52.226-2 HISTORICALLY BLACK COLLEGE OR UNIVERSITY AND MINORITY INSTITUTION REPRESENTATION (MAY 1997)

(a) Definitions. As used in this provision--

"Historically Black College or University" means an institution determined by the Secretary of Education to meet the requirements of 34 CFR 608.2. For the Department of Defense, the National Aeronautics and Space Administration, and the Coast Guard, the term also includes any nonprofit research institution that was an integral part of such a college or university before November 14, 1986.

"Minority Institution" means an institution of higher education meeting the requirements of Section 1046(3) of the Higher Education Act of 1965 (20 U.S.C. 1135d-5(3)) which, for the purpose of this provision, includes a Hispanic-serving institution of higher education as defined in Section 316(b)(1) of the Act (20 U.S.C. 1059c(b)(1)).

(b) Representation. The offeror represents that it--

[is] is not a Historically Black College or University;

[is] is not a Minority Institution.

52.226-1 UTILIZATION OF INDIAN ORGANIZATIONS AND INDIAN-OWNED ECONOMIC ENTERPRISES (FEB 2000)

(a) For Department of Defense contracts, this clause applies only if the contract includes a subcontracting plan incorporated under the terms of the clause at 52.219-9, Small Business Subcontracting Plan. It does not apply to contracts awarded based on a subcontracting plan submitted and approved under paragraph (g) of the clause at 52.219-9.

(b) Definitions. As used in this clause:

"Indian" means any person who is a member of any Indian tribe, band, group, pueblo or community which is recognized by the Federal Government as eligible for services from the Bureau of Indian Affairs (BIA) in accordance with 25 U.S.C. 1452(c) and any ‘‘Native’’ as defined in the Alaska Native Claims Settlement Act (43 U.S.C. 1601).

"Indian organization" means the governing body of any Indian tribe or entity established or recognized by the governing body of an Indian tribe for the purposes of 25 U.S.C., chapter 17.

"Indian-owned economic enterprise" means any Indian-owned (as determined by the Secretary of the Interior) commercial, industrial, or business activity established or organized for the purpose of profit, provided that Indian ownership shall constitute not less than 51 percent of the enterprise.

"Indian tribe" means any Indian tribe, band, group, pueblo or community, including native villages and native groups (including corporations organized by Kenai, Juneau, Sitka, and Kodiak) as defined in the Alaska Native Claims Settlement Act, which is recognized by the Federal Government as eligible for services from BIA in accordance with 25 U.S.C. 1542(c).

"Interested party" means a prime contractor or an actual or prospective offeror whose direct economic interest would be affected by the award of a subcontract or by the failure to award a subcontract.

(c)The Contractor agrees to use its best efforts to give Indian organizations and Indian-owned economic enterprises (25 U.S.C. 1544) the maximum practicable opportunity to participate in the subcontracts it awards to the fullest extent consistent with efficient performance of its contract.

(1) The Contracting Officer and the Contractor, acting in good faith, may rely on the representation of an Indian organization or Indian-owned economic enterprise as to its eligibility, unless an interested party challenges its status or the Contracting Officer has independent reason to question that status. In the event of a challenge to the representation of a subcontractor, the Contracting Officer shall refer the matter to the U.S. Department of the Interior, Bureau of Indian Affairs (BIA), Attn: Chief, Division of Contracting and Grants Administration, 1849 C Street, NW, MS-334A-SIB, Washington, DC 20245. The BIA will determine the eligibility and notify the Contracting Officer. The 5 percent incentive payment will not be made within 50 working days of subcontract award or while a challenge is pending. If a subcontractor is determined to be an ineligible participant, no incentive payment will be made under the Indian Incentive Program.

(2) The Contractor may request an adjustment under the Indian Incentive Program to the following:

(i) The estimated cost of a cost-type contract.

(ii) The target cost of a cost-plus-incentive-fee prime contract.

(iii) The target cost and ceiling price of a fixed-price incentive prime contract.

(iv) The price of a firm-fixed-price prime contract.

(3) The amount of the equitable adjustment to the prime contract shall be 5 percent of the estimated cost, target cost or firm-fixed-price included in the subcontract initially awarded to the Indian organization or Indian-owned economic enterprise.

(4) The Contractor has the burden of proving the amount claimed and must assert its request for an adjustment prior to completion of contract performance.

(d) T The Contracting Officer, subject to the terms and conditions of the contract and the availability of funds, will authorize an incentive payment of 5 percent of the amount paid to the subcontractor. The Contracting Officer will seek funding in accordance with agency procedures.

(End of clause)

52.227-1 AUTHORIZATION AND CONSENT (JUL 1995)

(a) The Government authorizes and consents to all use and manufacture, in performing this contract or any subcontract at any tier, of any invention described in and covered by a United States patent (1) embodied in the structure or composition of any article the delivery of which is accepted by the Government under this contract or (2) used in machinery, tools, or methods whose use necessarily results from compliance by the Contractor or a subcontractor with (i) specifications or written provisions forming a part of this contract or (ii) specific written instructions given by the Contracting Officer directing the manner of performance. The entire liability to the Government for infringement of a patent of the United States shall be determined solely by the provisions of the indemnity clause, if any, included in this contract or any subcontract hereunder (including any lower-tier subcontract), and the Government assumes liability for all other infringement to the extent of the authorization and consent hereinabove granted.

(b) The Contractor agrees to include, and require inclusion of, this clause, suitably modified to identify the parties, in all subcontracts at any tier for supplies or services (including construction, architect-engineer services, and materials, supplies, models, samples, and design or testing services expected to exceed the simplified acquisition threshold (however, omission of this clause from any subcontract, including those at or below the simplified acquisition threshold, does not affect this authorization and consent.)

52.228-1 BID GUARANTEE (SEP 1996)

(a) Failure to furnish a bid guarantee in the proper form and amount, by the time set for opening of bids, may be cause for rejection of the bid.

(b) The bidder shall furnish a bid guarantee in the form of a firm commitment, e.g., bid bond supported by good and sufficient surety or sureties acceptable to the Government, postal money order, certified check, cashier's check, irrevocable letter of credit, or, under Treasury Department regulations, certain bonds or notes of the United States.

The Contracting Officer will return bid guarantees, other than bid bonds, (1) to unsuccessful bidders as soon as practicable after the opening of bids, and (2) to the successful bidder upon execution of contractual documents and bonds (including any necessary coinsurance or reinsurance agreements), as required by the bid as accepted.-

(c) The amount of the bid guarantee shall be _____ percent of the bid price or $_____, whichever is less.-

(d) If the successful bidder, upon acceptance of its bid by the Government within the period specified for acceptance, fails to execute all contractual documents or furnish executed bond(s) within 10 days after receipt of the forms by the bidder, the Contracting Officer may terminate the contract for default.-

(e) In the event the contract is terminated for default, the bidder is liable for any cost of acquiring the work that exceeds the amount of its bid, and the bid guarantee is available to offset the difference.

52.228-2 ADDITIONAL BOND SECURITY (OCT 1997)

The Contractor shall promptly furnish additional security required to protect the Government and persons supplying labor or materials under this contract if--

(a) Any surety upon any bond, or issuing financial institution for other security, furnished with this contract becomes unacceptable to the Government.

(b) Any surety fails to furnish reports on its financial condition as required by the Government;

(c) The contract price is increased so that the penal sum of any bond becomes inadequate in the opinion of the Contracting Officer; or

(d) An irrevocable letter of credit (ILC) used as security will expire before the end of the period of required security. If the Contractor does not furnish an acceptable extension or replacement ILC, or other acceptable substitute, at least 30 days before an ILC's scheduled expiration, the Contracting officer has the right to immediately draw on the ILC.

52.228-11 PLEDGES OF ASSETS (FEB 1992)

(a) Offerors shall obtain from each person acting as an individual surety on a bid guarantee, a performance bond, or a payment bond--

(1) Pledge of assets; and

(2) Standard Form 28, Affidavit of Individual Surety.

(b) Pledges of assets from each person acting as an individual surety shall be in the form of--

(1) Evidence of an escrow account containing cash, certificates of deposit, commercial or Government securities, or other assets described in FAR 28.203-2 (except see 28.203-2(b)(2) with respect to Government securities held in book entry form) and/or;

(2) A recorded lien on real estate. The offeror will be required to provide--

(i) Evidence of title in the form of a certificate of title prepared by a title insurance company approved by the United States Department of Justice. This title evidence must show fee simple title vested in the surety along with any concurrent owners; whether any real estate taxes are due and payable; and any recorded encumbrances against the property, including the lien filed in favor of the Government as required by FAR 28.203-3(d);

(ii) Evidence of the amount due under any encumbrance shown in the evidence of title;

(iii) A copy of the current real estate tax assessment of the property or a current appraisal dated no earlier than 6 months prior to the date of the bond, prepared by a professional appraiser who certifies that the appraisal has been conducted in accordance with the generally accepted appraisal standards as reflected in the Uniform Standards of Professional Appraisal Practice, as promulgated by the Appraisal Foundation.

(End of clause)

52.228-12 PROSPECTIVE SUBCONTRACTOR REQUESTS FOR BONDS. (OCT 1995)

In accordance with Section 806(a)(3) of Pub. L. 102-190, as amended by Sections 2091 and 8105 of Pub. L. 103-355, upon the request of a prospective subcontractor or supplier offering to furnish labor or material for the performance of this contract for which a payment bond has been furnished to the Government pursuant to the Miller Act, the Contractor shall promptly provide a copy of such payment bond to the requester.

52.228-14 IRREVOCABLE LETTER OF CREDIT (DEC 1999)

(a) ‘‘Irrevocable letter of credit’’ (ILC), as used in this clause, means a written commitment by a federally insured financial institution to pay all or part of a stated amount of money, until the expiration date of the letter, upon presentation by the Government (the beneficiary) of a written demand therefor. Neither the financial institution nor the offeror/Contractor can revoke or condition the letter of credit.

(b) If the offeror intends to use an ILC in lieu of a bid bond, or to secure other types of bonds such as performance and payment bonds, the letter of credit and letter of confirmation formats in paragraphs (e) and (f) of this clause shall be used.

(c) The letter of credit shall be irrevocable, shall require presentation of no document other than a written demand and the ILC (including confirming letter, if any), shall be issued/confirmed by an acceptable federally insured financial institution as provided in paragraph (d) of this clause, and--

(1) If used as a bid guarantee, the ILC shall expire no earlier than 60 days after the close of the bid acceptance period;

(2) If used as an alternative to corporate or individual sureties as security for a performance or payment bond, the offeror/Contractor may submit an ILC with an initial expiration date estimated to cover the entire period for which financial security is required or may submit an ILC with an initial expiration date that is a minimum period of one year from the date of issuance. The ILC shall provide that, unless the issuer provides the beneficiary written notice of non-renewal at least 60 days in advance of the current expiration date, the ILC is automatically extended without amendment for one year from the expiration date, or any future expiration date, until the period of required coverage is completed and the Contracting Officer provides the financial institution with a written statement waiving the right

to payment. The period of required coverage shall be:

(i) For contracts subject to the Miller Act, the later of--

(A) One year following the expected date of final payment;

(B) For performance bonds only, until completion of any warranty period; or

(C) For payment bonds only, until resolution of all claims filed against the payment bond during the one-year period following final payment.

(ii) For contracts not subject to the Miller Act, the later of--

(A) 90 days following final payment; or

(B) For performance bonds only, until completion of any warranty period.

(d) Only federally insured financial institutions rated investment grade or higher shall issue or confirm the ILC. The offeror/Contractor shall provide the Contracting Officer a credit rating that indicates the financial institution has the required rating(s) as of the date of issuance of the ILC. Unless the financial institution issuing the ILC had letter of credit business of less than $25 million in the past year, ILCs over $5 million must be confirmed by another acceptable financial institution that had letter of credit business of less than $25 million in the past year.

(e) The following format shall be used by the issuing financial institution to create an ILC:

_____

[Issuing Financial Institution's Letterhead or Name and Address]

Issue Date _____

IRREVOCABLE LETTER OF CREDIT NO. _____

Account party's name _____

Account party's address _____

For Solicitation No. _____(for reference only)

TO: [U.S. Government agency]

[U.S. Government agency's address]

1. We hereby establish this irrevocable and transferable Letter of Credit in your favor for one or more drawings up to United States $_____. This Letter of Credit is payable at [issuing financial institution's and, if any, confirming financial institution's] office at [issuing financial institution's address and, if any, confirming financial institution's address] and expires with our close of business on _____, or any automatically extended expiration date.

2. We hereby undertake to honor your or the transferee's sight draft(s) drawn on the issuing or, if any, the confirming financial institution, for all or any part of this credit if presented with this Letter of Credit and confirmation, if any, at the office specified in paragraph 1 of this Letter of Credit on or before the expiration date or any automatically extended expiration date.

3. [This paragraph is omitted if used as a bid guarantee, and subsequent paragraphs are renumbered.] It is a condition of this Letter of Credit that it is deemed to be automatically extended without amendment for one year from the expiration date hereof, or any future expiration date, unless at least 60 days prior to any expiration date, we notify you or the transferee by registered mail, or other receipted means of delivery, that we elect not to consider this Letter of Credit renewed for any such additional period. At the time we notify you, we also agree to notify the account party (and confirming financial institution, if any) by the same means of delivery.

4. This Letter of Credit is transferable. Transfers and assignments of proceeds are to be effected without charge to either the beneficiary or the transferee/assignee of proceeds. Such transfer or assignment shall be only at the written direction of the Government (the beneficiary) in a form satisfactory to the issuing financial institution and the confirming financial institution, if any.

5. This Letter of Credit is subject to the Uniform Customs and Practice (UCP) for Documentary Credits, 1993 Revision, International Chamber of Commerce Publication No. 500, and to the extent not inconsistent therewith, to the laws of _____ [state of confirming financial institution, if any, otherwise state of issuing financial institution].

6. If this credit expires during an interruption of business of this financial institution as described in Article 17 of the UCP, the financial institution specifically agrees to effect payment if this credit is drawn against within 30 days after the resumption of our business.

Sincerely,

_____

[Issuing financial institution]

(f) The following format shall be used by the financial institution to confirm an ILC:

_____

[Confirming Financial Institution's Letterhead or Name and Address]

(Date) _____

Our Letter of Credit Advice Number _____

Beneficiary: _____ [U.S. Government agency]

Issuing Financial Institution: _____

Issuing Financial Institution's LC No.: _____

Gentlemen:

1. We hereby confirm the above indicated Letter of Credit, the original of which is attached, issued by _____ [name of issuing financial institution] for drawings of up to United States dollars _____/U.S. $_____ and expiring with our close of business on _____ [the expiration date], or any automatically extended expiration date.

2. Draft(s) drawn under the Letter of Credit and this Confirmation are payable at our office located at _____.

3. We hereby undertake to honor sight draft(s) drawn under and presented with the Letter of Credit and this Confirmation at our offices as specified herein.

4. [This paragraph is omitted if used as a bid guarantee, and subsequent paragraphs are renumbered.] It is a condition of this confirmation that it be deemed automatically extended without amendment for one year from the expiration date hereof, or any automatically extended expiration date, unless:

(a) At least 60 days prior to any such expiration date, we shall notify the Contracting Officer, or the transferee and the issuing financial institution, by registered mail or other receipted means of delivery, that we elect not to consider this confirmation extended for any such additional period; or

(b) The issuing financial institution shall have exercised its right to notify you or the transferee, the account party, and ourselves, of its election not to extend the expiration date of the Letter of Credit.

5. This confirmation is subject to the Uniform Customs and Practice (UCP) for Documentary Credits, 1993 Revision, International Chamber of Commerce Publication No. 500, and to the extent not inconsistent therewith, to the laws of _____ [state of confirming financial institution].

6. If this confirmation expires during an interruption of business of this financial institution as described in Article 17 of the UCP, we specifically agree to effect payment if this credit is drawn against within 30 days after the resumption of our business.

Sincerely,

_____

[Confirming financial institution]

(g) The following format shall be used by the Contracting Officer for a sight draft to draw on the Letter of Credit:

SIGHT DRAFT

_____

[City, State]

(Date) _____

[Name and address of financial institution]

Pay to the order of _____ [Beneficiary Agency] _____ the sum of United States $_____.
This draft is drawn under Irrevocable Letter of Credit No. _____.

_____

[Beneficiary Agency]

By: _____

(End of clause)

52.228-15 PERFORMANCE AND PAYMENT BONDS--CONSTRUCTION (SEP 1996)-

(a) Definitions. As used in this clause--

Contract price means the award price of the contract or, for requirements contracts, the price payable for the estimated quantity; or for indefinite-delivery type contracts, the price payable for the specified minimum quantity.

(b) Unless the resulting contract price is $100,000 or less, the successful offeror shall be required to furnish performance and payment bonds to the Contracting Officer as follows:

(1) Performance Bonds (Standard Form 25): (i) The penal amount of performance bonds shall be 100 percent of the original contract price.

(ii) The Government may require additional performance bond protection when the contract price is increased. The increase in protection shall generally equal 100 percent of the increase in contract price.

(iii) The Government may secure additional protection by directing the Contractor to increase the penal amount of the existing bond or to obtain an additional bond.

(2) Payment Bonds (Standard Form 25-A):

(i) The penal amount of payment bonds shall equal--

(A) 50 percent of the contract price if the contract price is not more than $1 million;

(B) 40 percent of the contract price if the contract price is more than $1 million but not more than $5 million; or

(C) $2.5 million if the contract price is more than $5 million.

(ii) If the original contract price is $5 million or less, the Government may require additional protection if the contract price is increased. The penal amount of the total protection shall meet the requirement of subparagraph (b)(2)(i) of this clause.

(iii) The Government may secure additional protection by directing the Contractor to increase the penal sum of the existing bond or to obtain an additional bond.

(c) The Contractor shall furnish all executed bonds, including any necessary reinsurance agreements, to the Contracting Officer, within the time period specified in the Bid Guarantee provision of the solicitation, or otherwise specified by the Contracting Officer, but in any event, before starting work.

(d) The bonds shall be in the form of firm commitment, supported by corporate sureties whose names appear on the list contained in Treasury Department Circular 570, individual sureties, or by other acceptable security such as postal money order, certified check, cashier's check, irrevocable letter of credit, or, in accordance with Treasury Department regulations, certain bonds or notes of the United States. Treasury Circular 570 is published in the Federal Register, or may be obtained from the U.S. Department of Treasury, Financial Management Service, Surety Bond Branch, 401 14th Street, NW., 2nd Floor, West Wing, Washington, DC 20227.

52.229-3 FEDERAL, STATE, AND LOCAL TAXES (JAN 1991)

(a) "Contract date," as used in this clause, means the date set for bid opening or, if this is a negotiated contract or a modification, the effective date of this contract or modification.

"All applicable Federal, State, and local taxes and duties," as used in this clause, means all taxes and duties, in effect on the contract date, that the taxing authority is imposing and collecting on the transactions or property covered by this contract.

"After-imposed Federal tax," as used in this clause, means any new or increased Federal excise tax or duty, or tax that was exempted or excluded on the contract date but whose exemption was later revoked or reduced during the contract period, on the transactions or property covered by this contract that the Contractor is required to pay or bear as the result of legislative, judicial, or administrative action taking effect after the contract date. It does not include social security tax or other employment taxes.

"After-relieved Federal tax," as used in this clause, means any amount of Federal excise tax or duty, except social security or other employment taxes, that would otherwise have been payable on the transactions or property covered by this contract, but which the Contractor is not required to pay or bear, or for which the Contractor obtains a refund or drawback, as the result of legislative, judicial, or administrative action taking effect after the contract date.

(b) The contract price includes all applicable Federal, State, and local taxes and duties.

(c) The contract price shall be increased by the amount of any after-imposed Federal tax, provided the Contractor warrants in writing that no amount for such newly imposed Federal excise tax or duty or rate increase was included in the contract price, as a contingency reserve or otherwise.

(d) The contract price shall be decreased by the amount of any after-relieved Federal tax.

(e) The contract price shall be decreased by the amount of any Federal excise tax or duty, except social security or other employment taxes, that the Contractor is required to pay or bear, or does not obtain a refund of, through the Contractor's fault, negligence, or failure to follow instructions of the Contracting Officer.

(f) No adjustment shall be made in the contract price under this clause unless the amount of the adjustment exceeds $250.

(g) The Contractor shall promptly notify the Contracting Officer of all matters relating to any Federal excise tax or duty that reasonably may be expected to result in either an increase or decrease in the contract price and shall take appropriate action as the Contracting Officer directs.

(h) The Government shall, without liability, furnish evidence appropriate to establish exemption from any Federal, State, or local tax when the Contractor requests such evidence and a reasonable basis exists to sustain the exemption.

(End of clause)

52.230-2 COST ACCOUNTING STANDARDS (APR 1998)

(a) Unless the contract is exempt under 48 CFR 9903.201-1 and 9903.201-2, the provisions of 48 CFR Part 9903 are incorporated herein by reference and the Contractor, in connection with this contract, shall--

(1) (CAS-covered Contracts Only) By submission of a Disclosure Statement, disclose in writing the Contractor's cost accounting practices as required by 48 CFR 9903.202-1 through 9903.202-5, including methods of distinguishing direct costs from indirect costs and the basis used for allocating indirect costs. The practices disclosed for this contract shall be the same as the practices currently disclosed and applied on all other contracts and subcontracts being performed by the Contractor and which contain a Cost Accounting Standards (CAS) clause. If the Contractor has notified the Contracting Officer that the Disclosure Statement contains trade secrets and commercial or financial information which is privileged and confidential, the Disclosure Statement shall be protected and shall not be released outside of the Government.

(2) Follow consistently the Contractor's cost accounting practices in accumulating and reporting contract performance cost data concerning this contract. If any change in cost accounting practices is made for the purposes of any contract or subcontract subject to CAS requirements, the change must be applied prospectively to this contract and the Disclosure Statement must be amended accordingly. If the contract price or cost allowance of this contract is affected by such changes, adjustment shall be made in accordance with subparagraph (a)(4) or (a)(5) of this clause, as appropriate.

(3) Comply with all CAS, including any modifications and interpretations indicated thereto contained in 48 CFR Part 9904, in effect on the date of award of this contract or, if the Contractor has submitted cost or pricing data, on the date of final agreement on price as shown on the Contractor's signed certificate of current cost or pricing data. The Contractor shall also comply with any CAS (or modifications to CAS) which hereafter become applicable to a contract or subcontract of the Contractor. Such compliance shall be required prospectively from the date of applicability to such contract or subcontract.

(4)(i) Agree to an equitable adjustment as provided in the Changes clause of this contract if the contract cost is affected by a change which, pursuant to subparagraph (a)(3) of this clause, the Contractor is required to make to the Contractor's established cost accounting practices.

(ii) Negotiate with the Contracting Officer to determine the terms and conditions under which a change may be made to a cost accounting practice, other than a change made under other provisions of subparagraph (a)(4) of this clause; provided that no agreement may be made under this provision that will increase costs paid by the United States.

(iii) When the parties agree to a change to a cost accounting practice, other than a change under subdivision (a)(4)(i) of this clause, negotiate an equitable adjustment as provided in the Changes clause of this contract.

(5) Agree to an adjustment of the contract price or cost allowance, as appropriate, if the Contractor or a subcontractor fails to comply with an applicable Cost Accounting Standard, or to follow any cost accounting practice consistently and such failure results in any increased costs paid by the United States. Such adjustment shall provide for recovery of the increased costs to the United States, together with interest thereon computed at the annual rate established under section 6621 of the Internal Revenue Code of 1986 (26 U.S.C. 6621) for such period, from the time the payment by the United States was made to the time the adjustment is effected. In no case shall the Government recover costs greater than the increased cost to the Government, in the aggregate, on the relevant contracts subject to the price adjustment, unless the Contractor made a change in its cost accounting practices of which it was aware or should have been aware at the time of price negotiations and which it failed to disclose to the Government.

(b) If the parties fail to agree whether the Contractor or a subcontractor has complied with an applicable CAS in 48 CFR 9904 or a CAS rule or regulation in 48 CFR 9903 and as to any cost adjustment demanded by the United States, such failure to agree will constitute a dispute under the Contract Disputes Act (41 U.S.C. 601).

(c) The Contractor shall permit any authorized representatives of the Government to examine and make copies of any documents, papers, or records relating to compliance with the requirements of this clause.

(d) The Contractor shall include in all negotiated subcontracts which the Contractor enters into, the substance of this clause, except paragraph (b), and shall require such inclusion in all other subcontracts, of any tier, including the obligation to comply with all CAS in effect on the subcontractor's award date or if the subcontractor has submitted cost or pricing data, on the date of final agreement on price as shown on the subcontractor's signed Certificate of Current Cost or Pricing Data. If the subcontract is awarded to a business unit which pursuant to 48 CFR 9903.201-2 is subject to other types of CAS coverage, the substance of the applicable clause set forth in subsection 30.201-4 of the Federal Acquisition Regulation shall be inserted. This requirement shall apply only to negotiated subcontracts in excess of $500,000, except that the requirement shall not apply to negotiated subcontracts otherwise exempt from the requirement to include a CAS clause as specified in 48 CFR 9903.201-1.

52.232-5 PAYMENTS UNDER FIXED-PRICE CONSTRUCTION CONTRACTS (MAY 1997)

(a) Payment of price. The Government shall pay the Contractor the contract price as provided in this contract.

(b) Progress payments. The Government shall make progress payments monthly as the work proceeds, or at more frequent intervals as determined by the Contracting Officer, on estimates of work accomplished which meets the standards of quality established under the contract, as approved by the Contracting Officer.

(1) The Contractor's request for progress payments shall include the following substantiation:

(i) An itemization of the amounts requested, related to the various elements of work required by the contract covered by the payment requested.

(ii) A listing of the amount included for work performed by each subcontractor under the contract.

(iii) A listing of the total amount of each subcontract under the contract.

(iv) A listing of the amounts previously paid to each such subcontractor under the contract.

(v) Additional supporting data in a form and detail required by the Contracting Officer.

(2) In the preparation of estimates, the Contracting Officer may authorize material delivered on the site and preparatory work done to be taken into consideration. Material delivered to the Contractor at locations other than the site also may be taken into consideration if--

(i) Consideration is specifically authorized by this contract; and

(ii) The Contractor furnishes satisfactory evidence that it has acquired title to such material and that the material will be used to perform this contract.

(c) Contractor certification. Along with each request for progress payments, the Contractor shall furnish the following certification, or payment shall not be made: (However, if the Contractor elects to delete paragraph (c)(4) from the certification, the certification is still acceptable.)

I hereby certify, to the best of my knowledge and belief, that--

(1) The amounts requested are only for performance in accordance with the specifications, terms, and conditions of the contract;

(2) Payments to subcontractors and suppliers have been made from previous payments received under the contract, and timely payments will be made from the proceeds of the payment covered by this certification, in accordance with subcontract agreements and the requirements of chapter 39 of Title 31, United States Code;

(3) This request for progress payments does not include any amounts which the prime contractor intends to withhold or retain from a subcontractor or supplier in accordance with the terms and conditions of the subcontract; and

(4) This certification is not to be construed as final acceptance of a subcontractor’s performance.

_____

(Name)

_____

(Title)

_____

(Date)

(d) Refund of unearned amounts. If the Contractor, after making a certified request for progress payments, discovers that a portion or all of such request constitutes a payment for performance by the Contractor that fails to conform to the specifications, terms, and conditions of this contract (hereinafter referred to as the "unearned amount"), the Contractor shall--

(1) Notify the Contracting Officer of such performance deficiency; and

(2) Be obligated to pay the Government an amount (computed by the Contracting Officer in the manner provided in paragraph (j) of this clause) equal to interest on the unearned amount from the 8th day after the date of receipt of the unearned amount until--

(i) The date the Contractor notifies the Contracting Officer that the performance deficiency has been corrected; or

(ii) The date the Contractor reduces the amount of any subsequent certified request for progress payments by an amount equal to the unearned amount.

(e) Retainage. If the Contracting Officer finds that satisfactory progress was achieved during any period for which a progress payment is to be made, the Contracting Officer shall authorize payment to be made in full. However, if satisfactory progress has not been made, the Contracting Officer may retain a maximum of 10 percent of the amount of the payment until satisfactory progress is achieved. When the work is substantially complete, the Contracting Officer may retain from previously withheld funds and future progress payments that amount the Contracting Officer considers adequate for protection of the Government and shall release to the Contractor all the remaining withheld funds. Also, on completion and acceptance of each separate building, public work, or other division of the contract, for which the price is stated separately in the contract, payment shall be made for the completed work without retention of a percentage.

(f) Title, liability, and reservation of rights. All material and work covered by progress payments made shall, at the time of payment, become the sole property of the Government, but this shall not be construed as--

(1) Relieving the Contractor from the sole responsibility for all material and work upon which payments have been made or the restoration of any damaged work; or

(2) Waiving the right of the Government to require the fulfillment of all of the terms of the contract.

(g) Reimbursement for bond premiums. In making these progress payments, the Government shall, upon request, reimburse the Contractor for the amount of premiums paid for performance and payment bonds (including coinsurance and reinsurance agreements, when applicable) after the Contractor has furnished evidence of full payment to the surety. The retainage provisions in paragraph (e) of this clause shall not apply to that portion of progress payments attributable to bond premiums.

(h) Final payment. The Government shall pay the amount due the Contractor under this contract after--

(1) Completion and acceptance of all work;

(2) Presentation of a properly executed voucher; and

(3) Presentation of release of all claims against
the Government arising by virtue of this contract, other than claims, in stated amounts, that the Contractor has specifically excepted from the operation of the release. A release may also be required of the assignee if the Contractor's claim to amounts payable under this contract has been assigned under the Assignment of Claims Act of 1940 (31 U.S.C. 3727 and 41 U.S.C. 15).

(i) Limitation because of undefinitized work. Notwithstanding any provision of this contract, progress payments shall not exceed 80 percent on work accomplished on undefinitized contract actions. A "contract action" is any action resulting in a contract, as defined in FAR Subpart 2.1, including contract modifications for additional supplies

or services, but not including contract modifications that are within the scope and under the terms of the contract, such as contract modifications issued pursuant to the Changes clause, or funding and other administrative changes.

(j) Interest computation on unearned amounts. In accordance with 31 U.S.C. 3903(c)(1), the amount payable under subparagraph (d)(2) of this clause shall be--

(1) Computed at the rate of average bond equivalent rates of 91-day Treasury bills auctioned at the most recent auction of such bills prior to the date the Contractor receives the unearned amount; and

(2) Deducted from the next available payment to the Contractor.

52.232-17 INTEREST (JUNE 1996)

(a) Except as otherwise provided in this contract under a Price Reduction for Defective Cost or Pricing Data clause or a Cost Accounting Standards clause, all amounts that become payable by the Contractor to the Government under this contract (net of any applicable tax credit under the Internal Revenue Code (26 U.S.C. 1481)) shall bear simple interest from the date due until paid unless paid within 30 days of becoming due. The interest rate shall be the interest rate established by the Secretary of the Treasury as provided in Section 12 of the Contract Disputes Act of 1978 (Public Law 95-563), which is applicable to the period in which the amount becomes due, as provided in paragraph (b) of this clause, and then at the rate applicable for each six-month period as fixed by the Secretary until the amount is paid. reproduce, prepare derivative works, distribute copies to the public, and (b) Amounts shall be due at the earliest of the following dates:

(1) The date fixed under this contract.

(2) The date of the first written demand for payment consistent with this contract, including any demand resulting from a default termination.

(3) The date the Government transmits to the Contractor a proposed supplemental agreement to confirm completed negotiations establishing the amount of debt.

(4) If this contract provides for revision of prices, the date of written notice to the Contractor stating the amount of refund payable in connection with a pricing proposal or a negotiated pricing agreement not confirmed by contract modification.

(c) The interest charge made under this clause may be reduced under the procedures prescribed in 32.614-2 of the Federal Acquisition Regulation in effect on the date of this contract.

52.232-18 AVAILABILITY OF FUNDS (APR 1984)

Funds are not presently available for this contract. The Government's obligation under this contract is contingent upon the availability of appropriated funds from which payment for contract purposes can be made. No legal liability on the part of the Government for any payment may arise until funds are made available to the Contracting Officer for this contract and until the Contractor receives notice of such availability, to be confirmed in writing by

the Contracting Officer.

52.232-23 ASSIGNMENT OF CLAIMS (JAN 1986)

(a) The Contractor, under the Assignment of Claims Act, as amended, 31 U.S.C. 3727, 41 U.S.C. 15 (hereafter referred to as "the Act"), may assign its rights to be paid amounts due or to become due as a result of the performance of this contract to a bank, trust company, or other financing institution, including any Federal lending agency. The assignee under such an assignment may thereafter further assign or reassign its right under the original assignment to any type of financing institution described in the preceding sentence.

(b) Any assignment or reassignment authorized under the Act and this clause shall cover all unpaid amounts payable under this contract, and shall not be made to more than one party, except that an assignment or reassignment may be made to one party as agent or trustee for two or more parties participating in the financing of this contract.

(c) The Contractor shall not furnish or disclose to any assignee under this contract any classified document (including this contract) or information related to work under this contract until the Contracting Officer authorizes such action in writing.

52.232-27 PROMPT PAYMENT FOR CONSTRUCTION CONTRACTS (JUN 1997)

Notwithstanding any other payment terms in this contract, the Government will make invoice payments and contract financing payments under the terms and conditions specified in this clause. Payment shall be considered as being made on the day a check is dated or the date of an electronic funds transfer. Definitions of pertinent terms are set forth in section 32.902 of the Federal Acquisition Regulation. All days referred to in this clause are calendar days, unless otherwise specified. (However, see subparagraph (a)(3) concerning payments due on Saturdays, Sundays, and legal holidays.)

(a) Invoice payments. (1) Types of invoice payments. For purposes of this clause, there are several types of invoice payments that may occur under this contract, as follows:

(i) Progress payments, if provided for elsewhere in this contract, based on Contracting Officer approval of the estimated amount and value of work or services performed, including payments for reaching milestones in any project:

(A) The due date for making such payments shall be 14 days after receipt of the payment request by the designated billing office. If the designated billing office fails to annotate the payment request with the actual date of receipt at the time of receipt, the payment due date shall be the 14th day after the date of the Contractor's payment request, provided a proper payment request is received and there is no disagreement over quantity, quality, or Contractor compliance with contract requirements.

(B) The due date for payment of any amounts retained by the Contracting Officer in accordance with the clause at 52.232-5, Payments Under Fixed-Price Construction Contracts, shall be as specified in the contract or, if not specified, 30 days after approval for release to the Contractor by the Contracting Officer.

(ii) Final payments based on completion and acceptance of all work and presentation of release of all claims against

the Government arising by virtue of the contract, and payments for partial deliveries that have been accepted by the Government (e.g., each separate building, public work, or other division of the contract for which the price is stated separately in the contract):

(A) The due date for making such payments shall be either the 30th day after receipt by the designated billing office of a proper invoice from the Contractor, or the 30th day after Government acceptance of the work or services completed by the Contractor, whichever is later. If the designated billing office fails to annotate the invoice with the date of actual receipt at the time of receipt, the invoice payment due date shall be the 30th day after the date of the Contractor's invoice, provided a proper invoice is received and there is no disagreement over quantity, quality, or Contractor compliance with contract requirements.

(B) On a final invoice where the payment amount is subject to contract settlement actions (e.g., release of claims), acceptance shall be deemed to have occurred on the effective date of the contract settlement.

(2) Contractor's invoice. The Contractor shall prepare and submit invoices to the designated billing office specified in the contract. A proper invoice must include the items listed in subdivisions (a)(2)(i) through (a)(2)(ix) of this clause. If the invoice does not comply with these requirements, it shall be returned within 7 days after the date the designated billing office received the invoice, with a statement of the reasons why it is not a proper invoice. Untimely notification will be taken into account in computing any interest penalty owed the Contractor in the manner described in subparagraph (a)(4) of this clause.

(i) Name and address of the Contractor.

(ii) Invoice date. (The Contractor is encouraged to date invoices as close as possible to the date of mailing or transmission.)

(iii) Contract number or other authorization for work or services performed (including order number and contract line item number).

(iv) Description of work or services performed.

(v) Delivery and payment terms (e.g., prompt payment discount terms).

(vi) Name and address of Contractor official to whom payment is to be sent (must be the same as that in the contract or in a proper notice of assignment).

(vii) Name (where practicable), title, phone number, and mailing address of person to be notified in the event of a defective invoice.

(viii) For payments described in subdivision (a)(1)(i) of this clause, substantiation of the amounts requested and certification in accordance with the requirements of the clause at 52.232-5, Payments Under Fixed-Price Construction Contracts.

(ix) Any other information or documentation required by the contract.

(x) While not required, the Contractor is strongly encouraged to assign an identification number to each invoice.

(3) Interest penalty. An interest penalty shall be paid automatically by the designated payment office, without

request from the Contractor, if payment is not made by the due date and the conditions listed in subdivisions (a)(3)(i) through (a)(3)(iii) of this clause are met, if applicable. However, when the due date falls on a Saturday, Sunday, or legal holiday when Federal Government offices are closed and Government business is not expected to be conducted, payment may be made on the following business day without incurring a late payment interest penalty.

(i) A proper invoice was received by the designated billing office.

(ii) A receiving report or other Government documentation authorizing payment was processed and there was no disagreement over quantity, quality, Contractor compliance with any contract term or condition, or requested progress payment amount.

(iii) In the case of a final invoice for any balance of funds due the Contractor for work or services performed, the amount was not subject to further contract settlement actions between the Government and the Contractor.

(4) Computing penalty amount. The interest penalty shall be at the rate established by the Secretary of the Treasury under section 12 of the Contract Disputes Act of 1978 (41 U.S.C. 611) that is in effect on the day after the due date, except where the interest penalty is prescribed by other governmental authority (e.g., tariffs). This rate is referred to as the "Renegotiation Board Interest Rate," and it is published in the Federal Register semiannually on or about January 1 and July 1. The interest penalty shall accrue daily on the invoice principal payment amount approved by the Government until the payment date of such approved principal amount; and will be compounded in 30-day increments inclusive from the first day after the due date through the payment date. That is, interest accrued at the end of any 30-day period will be added to the approved invoice principal payment amount and will be subject to interest penalties if not paid in the succeeding 30-day period. If the designated billing office failed to notify the Contractor of a defective invoice within the periods prescribed in subparagraph (a)(2) of this clause, the due date on the corrected invoice will be adjusted by subtracting from such date the number of days taken beyond the prescribed notification of defects period. Any interest penalty owed the Contractor will be based on this adjusted due date. Adjustments will be made by the designated payment office for errors in calculating interest penalties.

(i) For the sole purpose of computing an interest penalty that might be due the Contractor for payments described in subdivision (a)(1)(ii) of this clause, Government acceptance or approval shall be deemed to have occurred constructively on the 7th day after the Contractor has completed the work or services in accordance with the terms and conditions of the contract. In the event that actual acceptance or approval occurs within the constructive acceptance or approval period, the determination of an interest penalty shall be based on the actual date of acceptance or approval. Constructive acceptance or constructive approval requirements do not apply if there is a disagreement over quantity, quality, or Contractor compliance with a contract provision. These requirements also do not compel Government officials to accept work or services, approve Contractor estimates, perform contract administration functions, or make payment prior to fulfilling their responsibilities.

(ii) The following periods of time will not be included in the determination of an interest penalty:

(A) The period taken to notify the Contractor of defects in invoices submitted to the Government, but this may not exceed 7 days.

(B) The period between the defects notice and resubmission of the corrected invoice by the Contractor.

(C) For incorrect electronic funds transfer (EFT) information, in accordance with the EFT clause of this contract.

(iii) Interest penalties will not continue to accrue after the filing of a claim for such penalties under the clause at 52.233-1, Disputes, or for more than 1 year. Interest penalties of less than $1 need not be paid.

(iv) Interest penalties are not required on payment delays due to disagreement between the Government and the Contractor over the payment amount or other issues involving contract compliance, or on amounts temporarily withheld or retained in accordance with the terms of the contract. Claims involving disputes, and any interest that may be payable, will be resolved in accordance with the clause at 52.233-1, Disputes.

(5) Prompt payment discounts. An interest penalty also shall be paid automatically by the designated payment office, without request from the Contractor, if a discount for prompt payment is taken improperly. The interest penalty will be calculated on the amount of discount taken for the period beginning with the first day after the end of the discount period through the date when the Contractor is paid.

(6) Additional interest penalty. (i) If this contract was awarded on or after October 1, 1989, a penalty amount, calculated in accordance with subdivision (a)(6)(iii) of this clause, shall be paid in addition to the interest penalty amount if the Contractor--

(A) Is owed an interest penalty of $1 or more;

(B) Is not paid the interest penalty within 10 days after the date the invoice amount is paid; and

(C) Makes a written demand to the designated payment office for additional penalty payment, in accordance with subdivision (a)(6)(ii) of this clause, postmarked not later than 40 days after the date the invoice amount is paid.

(ii)(A) Contractors shall support written demands for additional penalty payments with the following data. No additional data shall be required. Contractors shall--

(1) Specifically assert that late payment interest is due under a specific invoice, and request payment of all overdue late payment interest penalty and such additional penalty as may be required;

(2) Attach a copy of the invoice on which the unpaid late payment interest was due; and

(3) State that payment of the principal has been received, including the date of receipt.

(B) Demands must be postmarked on or before the 40th day after payment was made, except that--

(1) If the postmark is illegible or nonexistent, the demand must have been received and annotated with the date of receipt by the designated payment office on or before the 40th day after payment was made; or

(2) If the postmark is illegible or nonexistent and the designated payment office fails to make the required annotation, the demand's validity will be determined by the date the Contractor has placed on the demand; provided such date is no later than the 40th day after payment was made.

(iii)(A) The additional penalty shall be equal to 100 percent of any original late payment interest penalty, except--

(1) The additional penalty shall not exceed $5,000;

(2) The additional penalty shall never be less than $25; and

(3) No additional penalty is owed if the amount of the underlying interest penalty is less than $1.

(B) If the interest penalty ceases to accrue in accordance with the limits stated in subdivision (a)(4)(iii) of this clause, the amount of the additional penalty shall be calculated on the amount of interest penalty that would have accrued in the absence of these limits, subject to the overall limits on the additional penalty specified in subdivision (a)(6)(iii)(A) of this clause.

(C) For determining the maximum and minimum additional penalties, the test shall be the interest penalty due on each separate payment made for each separate contract. The maximum and minimum additional penalty shall not be based upon individual invoices unless the invoices are paid separately. Where payments are consolidated for disbursing purposes, the maximum and minimum additional penalty determination shall be made separately for each contract therein.

(D) The additional penalty does not apply to payments regulated by other Government regulations (e.g., payments under utility contracts subject to tariffs and regulation).

(b) Contract financing payments. (1) Due dates for recurring financing payments. If this contract provides for contract financing, requests for payment shall be submitted to the designated billing office as specified in this contract or as directed by the Contracting Officer. Contract financing payments shall be made on the [insert day as prescribed by Agency head; if not prescribed, insert 30th day] day after receipt of a proper contract financing request by the designated billing office. In the event that an audit or other review of a specific financing request is required to ensure compliance with the terms and conditions of the contract, the designated payment office is not compelled to make payment by the due date specified.

(2) Due dates for other contract financing. For advance payments, loans, or other arrangements that do not involve recurring submissions of contract financing requests, payment shall be made in accordance with the corresponding contract terms or as directed by the Contracting Officer.

(3) Interest penalty not applicable. Contract financing payments shall not be assessed an interest penalty for payment delays.

(c) Subcontract clause requirements. The Contractor shall include in each subcontract for property or services (including a material supplier) for the purpose of performing this contract the following:

(1) Prompt payment for subcontractors. A payment clause that obligates the Contractor to pay the subcontractor for satisfactory performance under its subcontract not later than 7 days from receipt of payment out of such amounts as are paid to the Contractor under this contract.

(2) Interest for subcontractors. An interest penalty clause that obligates the Contractor to pay to the subcontractor an interest penalty for each payment not made in accordance with the payment clause--

(i) For the period beginning on the day after the required payment date and ending on the date on which payment of the amount due is made; and

(ii) Computed at the rate of interest established by the Secretary of the Treasury, and published in the Federal Register, for interest payments under section 12 of the Contract Disputes Act of 1978 (41 U.S.C. 611) in effect at the time the Contractor accrues the obligation to pay an interest penalty.

(3) Subcontractor clause flowdown. A clause requiring each subcontractor to include a payment clause and an interest penalty clause conforming to the standards set forth in subparagraphs (c)(1) and (c)(2) of this clause in each of its subcontracts, and to require each of its subcontractors to include such clauses in their subcontracts with each lower-tier subcontractor or supplier.

(d) Subcontract clause interpretation. The clauses required by paragraph (c) of this clause shall not be construed to impair the right of the Contractor or a subcontractor at any tier to negotiate, and to include in their subcontract, provisions that--

(1) Retainage permitted. Permit the Contractor or a subcontractor to retain (without cause) a specified percentage of each progress payment otherwise due to a subcontractor for satisfactory performance under the subcontract without incurring any obligation to pay a late payment interest penalty, in accordance with terms and conditions agreed to by the parties to the subcontract, giving such recognition as the parties deem appropriate to the ability of a subcontractor to furnish a performance bond and a payment bond;

(2) Withholding permitted. Permit the Contractor or subcontractor to make a determination that part or all of the subcontractor's request for payment may be withheld in accordance with the subcontract agreement; and

(3) Withholding requirements. Permit such withholding without incurring any obligation to pay a late payment penalty if--

(i) A notice conforming to the standards of paragraph (g) of this clause previously has been furnished to the subcontractor; and

(ii) A copy of any notice issued by a Contractor pursuant to subdivision (d)(3)(i) of this clause has been furnished to the Contracting Officer.

(e) Subcontractor withholding procedures. If a Contractor, after making a request for payment to the Government but before making a payment to a subcontractor for the subcontractor's performance covered by the payment request, discovers that all or a portion of the payment otherwise due such subcontractor is subject to withholding from the subcontractor in accordance with the subcontract agreement, then the Contractor shall--

(1) Subcontractor notice. Furnish to the subcontractor a notice conforming to the standards of paragraph (g) of this clause as soon as practicable upon ascertaining the cause giving rise to a withholding, but prior to the due date for subcontractor payment;

(2) Contracting Officer notice. Furnish to the Contracting Officer, as soon as practicable, a copy of the notice furnished to the subcontractor pursuant to subparagraph (e)(1) of this clause;

(3) Subcontractor progress payment reduction. Reduce the subcontractor's progress payment by an amount not to exceed the amount specified in the notice of withholding furnished under subparagraph (e)(1) of this clause;

(4) Subsequent subcontractor payment. Pay the subcontractor as soon as practicable after the correction of the identified subcontract performance deficiency, and--

(i) Make such payment within--

(A) Seven days after correction of the identified subcontract performance deficiency (unless the funds therefor must be recovered from the Government because of a reduction under subdivision (e)(5)(i)) of this clause; or

(B) Seven days after the Contractor recovers such funds from the Government; or

(ii) Incur an obligation to pay a late payment interest penalty computed at the rate of interest established by the Secretary of the Treasury, and published in the Federal Register, for interest payments under section 12 of the Contracts Disputes Act of 1978 (41 U.S.C. 611) in effect at the time the Contractor accrues the obligation to pay an interest penalty;

(5) Notice to Contracting Officer. Notify the Contracting Officer upon--

(i) Reduction of the amount of any subsequent certified application for payment; or

(ii) Payment to the subcontractor of any withheld amounts of a progress payment, specifying--

(A) The amounts withheld under subparagraph (e)(1) of this clause; and

(B) The dates that such withholding began and ended; and

(6) Interest to Government. Be obligated to pay to the Government an amount equal to interest on the withheld payments (computed in the manner provided in 31 U.S.C. 3903(c)(1)), from the 8th day after receipt of the withheld amounts from the Government until--

(i) The day the identified subcontractor performance deficiency is corrected; or

(ii) The date that any subsequent payment is reduced under subdivision (e)(5)(i) of this clause.

(f) Third-party deficiency reports. (1) Withholding from subcontractor. If a Contractor, after making payment to a first-tier subcontractor, receives from a supplier or subcontractor of the first-tier subcontractor (hereafter referred to as a "second-tier subcontractor") a written notice in accordance with section 2 of the Act of August 24, 1935 (40 U.S.C. 270b, Miller Act), asserting a deficiency in such first-tier subcontractor's performance under the contract for which the Contractor may be ultimately liable, and the Contractor determines that all or a portion of future payments otherwise due such first-tier subcontractor is subject to withholding in accordance with the subcontract agreement, the Contractor may, without incurring an obligation to pay an interest penalty under subparagraph (e)(6) of this clause--

(i) Furnish to the first-tier subcontractor a notice conforming to the standards of paragraph (g) of this clause as soon as practicable upon making such determination; and

(ii) Withhold from the first-tier subcontractor's next available progress payment or payments an amount not to exceed the amount specified in the notice of withholding furnished under subdivision (f)(1)(i) of this clause.

(2) Subsequent payment or interest charge. As soon as practicable, but not later than 7 days after receipt of satisfactory written notification that the identified subcontract performance deficiency has been corrected, the Contractor shall--

(i) Pay the amount withheld under subdivision (f)(1)(ii) of this clause to such first-tier subcontractor; or

(ii) Incur an obligation to pay a late payment interest penalty to such first-tier subcontractor computed at the rate of interest established by the Secretary of the Treasury, and published in the Federal Register, for interest payments under section 12 of the Contracts Disputes Act of 1978 (41 U.S.C. 611) in effect at the time the Contractor accrues the obligation to pay an interest penalty.

(g) Written notice of subcontractor withholding. A written notice of any withholding shall be issued to a subcontractor (with a copy to the Contracting Officer of any such notice issued by the Contractor), specifying--

(1) The amount to be withheld;

(2) The specific causes for the withholding under the terms of the subcontract; and

(3) The remedial actions to be taken by the subcontractor in order to receive payment of the amounts withheld.

(h) Subcontractor payment entitlement. The Contractor may not request payment from the Government of any amount withheld or retained in accordance with paragraph (d) of this clause until such time as the Contractor has determined and certified to the Contracting Officer that the subcontractor is entitled to the payment of such amount.

(i) Prime-subcontractor disputes. A dispute between the Contractor and subcontractor relating to the amount or entitlement of a subcontractor to a payment or a late payment interest penalty under a clause included in the subcontract pursuant to paragraph (c) of this clause does not constitute a dispute to which the United States is a party. The United States may not be interpleaded in any judicial or administrative proceeding involving such a dispute.

(j) Preservation of prime-subcontractor rights. Except as provided in paragraph (i) of this clause, this clause shall not limit or impair any contractual, administrative, or judicial remedies otherwise available to the Contractor or a subcontractor in the event of a dispute involving late payment or nonpayment by the Contractor or deficient subcontract performance or nonperformance by a subcontractor.

(k) Non-recourse for prime contractor interest penalty. The Contractor's obligation to pay an interest penalty to a subcontractor pursuant to the clauses included in a subcontract under paragraph (c) of this clause shall not be construed to be an obligation of the United States for such interest penalty. A cost-reimbursement claim may not include any amount for reimbursement of such interest penalty.

52.232-33 PAYMENT BY ELECTRONIC FUNDS TRANSFER—CENTRAL CONTRACTOR REGISTRATION (MAY 1999)

(a) Method of payment. (1) All payments by the Government under this contract shall be made by electronic funds transfer (EFT), except as provided in paragraph (a)(2) of this clause. As used in this clause, the term ``EFT'' refers to the funds transfer and may also include the payment information transfer.

(2) In the event the Government is unable to release one or more payments by EFT, the Contractor agrees to either--

(i) Accept payment by check or some other mutually agreeable method of payment; or

(ii) Request the Government to extend the payment due date until such time as the Government can make payment by EFT (but see paragraph (d) of this clause).

(b) Contractor's EFT information. The Government shall make payment to the Contractor using the EFT information contained in the Central Contractor Registration (CCR) database. In the event that the EFT information changes, the Contractor shall be responsible for providing the updated information to the CCR database.

(c) Mechanisms for EFT payment. The Government may make payment by EFT through either the Automated Clearing House (ACH) network, subject to the rules of the National Automated Clearing House Association, or the Fedwire Transfer System. The rules governing Federal payments through the ACH are contained in 31 CFR part 210.

(d) Suspension of payment. If the Contractor's EFT information in the CCR database is incorrect, then the Government need not make payment to the Contractor under this contract until correct EFT information is entered into the CCR database; and any invoice or contract financing request shall be deemed not to be a proper invoice for the purpose of prompt payment under this contract. The prompt payment terms of the contract regarding notice of an improper invoice and delays in accrual of interest penalties apply.

(e) Contractor EFT arrangements. If the Contractor has identified multiple payment receiving points (i.e., more than one remittance address and/or EFT information set) in the CCR database, and the Contractor has not notified the Government of the payment receiving point applicable to this contract, the Government shall make payment to the first payment receiving point (EFT information set or remittance address as applicable) listed in the CCR database.

(f) Liability for uncompleted or erroneous transfers. (1) If an uncompleted or erroneous transfer occurs because the Government used the Contractor's EFT information incorrectly, the Government remains responsible for--

(i) Making a correct payment;

(ii) Paying any prompt payment penalty due; and

(iii) Recovering any erroneously directed funds.

(2) If an uncompleted or erroneous transfer occurs because the Contractor's EFT information was incorrect, or was revised within 30 days of Government release of the EFT payment transaction instruction to the Federal Reserve System, and--

(i) If the funds are no longer under the control of the payment office, the Government is deemed to have made payment and the Contractor is responsible for recovery of any erroneously directed funds; or

(ii) If the funds remain under the control of the payment office, the Government shall not make payment, and the provisions of paragraph (d) of this clause shall apply.

(g) EFT and prompt payment. A payment shall be deemed to have been made in a timely manner in accordance with the prompt payment terms of this contract if, in the EFT payment transaction instruction released to the Federal Reserve System, the date specified for settlement of the payment is on or before the prompt payment due date, provided the specified payment date is a valid date under the rules of the Federal Reserve System.

(h) EFT and assignment of claims. If the Contractor assigns the proceeds of this contract as provided for in the assignment of claims terms of this contract, the Contractor shall require as a condition of any such assignment, that the assignee shall register in the CCR database and shall be paid by EFT in accordance with the terms of this clause. In all respects, the requirements of this clause shall apply to the assignee as if it were the Contractor. EFT information that shows the ultimate recipient of the transfer to be other than the Contractor, in the absence of a proper assignment of claims acceptable to the Government, is incorrect EFT information within the meaning of paragraph (d) of this clause.

(i) Liability for change of EFT information by financial agent. The Government is not liable for errors resulting from changes to EFT information made by the Contractor's financial agent.

(j) Payment information. The payment or disbursing office shall forward to the Contractor available payment information that is suitable for transmission as of the date of release of the EFT instruction to the Federal Reserve System. The Government may request the Contractor to designate a desired format and method(s) for delivery of payment information from a list of formats and methods the payment office is capable of executing. However, the Government does not guarantee that any particular format or method of delivery is available at any particular payment office and retains the latitude to use the format and delivery method most convenient to the Government. If the Government makes payment by check in accordance with paragraph (a) of this clause, the Government shall mail the payment information to the remittance address contained in the CCR database.

(End of Clause)

52.233-1 DISPUTES. (DEC 1998)

(a) This contract is subject to the Contract Disputes Act of 1978, as amended (41 U.S.C. 601-613).

(b) Except as provided in the Act, all disputes arising under or relating to this contract shall be resolved under this clause.

(c) "Claim," as used in this clause, means a written demand or written assertion by one of the contracting parties seeking, as a matter of right, the payment of money in a sum certain, the adjustment or interpretation of contract terms, or other relief arising under or relating to this contract. A claim arising under a contract, unlike a claim relating to that contract, is a claim that can be resolved under a contract clause that provides for the relief sought by the claimant. However, a written demand or written assertion by the Contractor seeking the payment of money exceeding $100,000 is not a claim under the Act until certified as required by subparagraph (d)(2) of this clause. A voucher, invoice, or other routine request for payment that is not in dispute when submitted is not a claim under the Act. The submission may be converted to a claim under the Act, by complying with the submission and certification requirements of this clause, if it is disputed either as to liability or amount or is not acted upon in a reasonable time.

(d)(1) A claim by the Contractor shall be made in writing and, unless otherwise stated in this contract, submitted within 6 years after accrual of the claim to the Contracting Officer for a written decision. A claim by the Government against the Contractor shall be subject to a written decision by the Contracting Officer.

(2)(i) The contractors shall provide the certification specified in subparagraph (d)(2)(iii) of this clause when submitting any claim -

(A) Exceeding $100,000; or

(B) Regardless of the amount claimed, when using -

(1) Arbitration conducted pursuant to 5 U.S.C. 575-580; or

(2) Any other alternative means of dispute resolution (ADR) technique that the agency elects to handle in accordance with the Administrative Dispute Resolution Act (ADRA).

(ii) The certification requirement does not apply to issues in controversy that have not been submitted as all or part of a claim.

(iii) The certification shall state as follows: "I certify that the claim is made in good faith; that the supporting data are accurate and complete to the best of my knowledge and belief; that the amount requested accurately reflects the contract adjustment for which the Contractor believes the Government is liable; and that I am duly authorized to certify the claim on behalf of the Contractor.

(3) The certification may be executed by any person duly authorized to bind the Contractor with respect to the claim.

(e) For Contractor claims of $100,000 or less, the Contracting Officer must, if requested in writing by the Contractor, render a decision within 60 days of the request. For Contractor-certified claims over $100,000, the Contracting Officer must, within 60 days, decide the claim or notify the Contractor of the date by which the decision will be made.

(f) The Contracting Officer's decision shall be final unless the Contractor appeals or files a suit as provided in the Act.

(g) If the claim by the Contractor is submitted to the Contracting Officer or a claim by the Government is presented to the Contractor, the parties, by mutual consent, may agree to use alternative disput resolution (ADR). If the Contractor refuses an offer for ADR, the Contractor shall inform the Contracting Officer, in writing, of the Contractor's specific reasons for rejecting the request.

(h) The Government shall pay interest on the amount found due and unpaid from (1) the date the Contracting Officer receives the claim (certified, if required); or (2) the date that payment otherwise would be due, if that date is later, until the date of payment. With regard to claims having defective certifications, as defined in (FAR) 48 CFR 33.201, interest shall be paid from the date that the Contracting Officer initially receives the claim. Simple interest on claims shall be paid at the rate, fixed by the Secretary of the Treasury as provided in the Act, which is applicable to the period during which the Contracting Officer receives the claim and then at the rate applicable for each 6-month period as fixed by the Treasury Secretary during the pendency of the claim.

(i) The Contractor shall proceed diligently with performance of this contract, pending final resolution of any request for relief, claim, appeal, or action arising under the contract, and comply with any decision of the Contracting Officer.

(End of clause)

52.233-3 PROTEST AFTER AWARD (AUG. 1996)

(a) Upon receipt of a notice of protest (as defined in FAR 33.101) or a determination that a protest is likely (see FAR 33.102(d)), the Contracting Officer may, by written order to the Contractor, direct the Contractor to stop

performance of the work called for by this contract. The order shall be specifically identified as a stop-work order issued under this clause. Upon receipt of the order, the Contractor shall immediately comply with its terms and take all reasonable steps to minimize the incurrence of costs allocable to the work covered by the order during the period of work stoppage. Upon receipt of the final decision in the protest, the Contracting Officer shall either--

(1) Cancel the stop-work order; or

(2) Terminate the work covered by the order as provided in the Default, or the Termination for Convenience of the Government, clause of this contract.

(b) If a stop-work order issued under this clause is canceled either before or after a final decision in the protest, the Contractor shall resume work. The Contracting Officer shall make an equitable adjustment in the delivery schedule or contract price, or both, and the contract shall be modified, in writing, accordingly, if--

(1) The stop-work order results in an increase in the time required for, or in the Contractor's cost properly allocable to, the performance of any part of this contract; and

(2) The Contractor asserts its right to an adjustment within 30 days after the end of the period of work stoppage; provided, that if the Contracting Officer decides the facts justify the action, the Contracting Officer may receive and act upon a proposal at any time before final payment under this contract.

(c) If a stop-work order is not canceled and the work covered by the order is terminated for the convenience of the Government, the Contracting Officer shall allow reasonable costs resulting from the stop-work order in arriving at the termination settlement.

(d) If a stop-work order is not canceled and the work covered by the order is terminated for default, the Contracting Officer shall allow, by equitable adjustment or otherwise, reasonable costs resulting from the stop-work order.

(e) The Government's rights to terminate this contract at any time are not affected by action taken under this clause.

(f) If, as the result of the Contractor's intentional or negligent misstatement, misrepresentation, or miscertification, a protest related to this contract is sustained, and the Government pays costs, as provided in FAR 33.102(b)(2) or 33.104(h)(1), the Government may require the Contractor to reimburse the Government the amount of such costs. In addition to any other remedy available, and pursuant to the requirements of Subpart 32.6, the Government may collect this debt by offsetting the amount against any payment due the Contractor under any contract between the Contractor and the Government.

52.236-1 PERFORMANCE OF WORK BY THE CONTRACTOR (APR 1984)

The Contractor shall perform on the site, and with its own organization, work equivalent to at least [insert the appropriate number in words followed by numerals in parentheses] percent of the total amount of work to be performed under the contract. This percentage may be reduced by a supplemental agreement to this contract if, during performing the work, the Contractor requests a reduction and the Contracting Officer determines that the reduction would be to the advantage of the Government.

52.236-2 DIFFERING SITE CONDITIONS (APR 1984)

As prescribed in 36.502, insert the following clause in solicitations and contracts when a fixed-price construction contract or a fixed-price dismantling, demolition, or removal of improvements contract is contemplated and the contract amount is expected to exceed the small purchase limitation. The Contracting Officer may insert the clause in solicitations and contracts when a fixed-price construction or a fixed-price contract for dismantling, demolition, or removal of improvements is contemplated and the contract amount is expected to be within the small purchase limitation.

(a) The Contractor shall promptly, and before the conditions are disturbed, give a written notice to the Contracting Officer of

(1) subsurface or latent physical conditions at the site which differ materially from those indicated in this contract, or

(2) unknown physical conditions at the site, of an unusual nature, which differ materially from those ordinarily encountered and generally recognized as inhering in work of the character provided for in the contract.

(b) The Contracting Officer shall investigate the site conditions promptly after receiving the notice. If the conditions do materially so differ and cause an increase or decrease in the Contractor's cost of, or the time required for, performing any part of the work under this contract, whether or not changed as a result of the conditions, an equitable adjustment shall be made under this clause and the contract modified in writing accordingly.

(c) No request by the Contractor for an equitable adjustment to the contract under this clause shall be allowed, unless the Contractor has given the written notice required; provided, that the time prescribed in (a) above for giving written notice may be extended by the Contracting Officer.

(d) No request by the Contractor for an equitable adjustment to the contract for differing site conditions shall be allowed if made after final payment under this contract.

52.236-3 SITE INVESTIGATION AND CONDITIONS AFFECTING THE WORK (APR 1984)

(a) The Contractor acknowledges that it has taken steps reasonably necessary to ascertain the nature and location of the work, and that it has investigated and satisfied itself as to the general and local conditions which can affect the work or its cost, including but not limited to

(1) conditions bearing upon transportation, disposal, handling, and storage of materials;

(2) the availability of labor, water, electric power, and roads;

(3) uncertainties of weather, river stages, tides, or similar physical conditions at the site;

(4) the conformation and conditions of the ground; and (5) the character of equipment and facilities needed preliminary to and during work performance. The Contractor also acknowledges that it has satisfied itself as to the character, quality, and quantity of surface and subsurface materials or obstacles to be encountered insofar as this information is reasonably ascertainable from an inspection of the site, including all exploratory work done by the Government, as well as from the drawings and specifications made a part of this contract. Any failure of the Contractor to take the actions described and acknowledged in this paragraph will not relieve the Contractor from

responsibility for estimating properly the difficulty and cost of successfully performing the work, or for proceeding to successfully perform the work without additional expense to the Government.

(b) The Government assumes no responsibility for any conclusions or interpretations made by the Contractor based on the information made available by the Government. Nor does the Government assume responsibility for any understanding reached or representation made concerning conditions which can affect the work by any of its officers or agents before the execution of this contract, unless that understanding or representation is expressly stated in this contract.

52.236-5 MATERIAL AND WORKMANSHIP (APR 1984)

(a) All equipment, material, and articles incorporated into the work covered by this contract shall be new and of the most suitable grade for the purpose intended, unless otherwise specifically provided in this contract. References in the specifications to equipment, material, articles, or patented processes by trade name, make, or catalog number, shall be regarded as establishing a standard of quality and shall not be construed as limiting competition. The Contractor may, at its option, use any equipment, material, article, or process that, in the judgment of the Contracting Officer, is equal to that named in the specifications, unless otherwise specifically provided in this contract.

(b) The Contractor shall obtain the Contracting Officer's approval of the machinery and mechanical and other equipment to be incorporated into the work. When requesting approval, the Contractor shall furnish to the Contracting Officer the name of the manufacturer, the model number, and other information concerning the performance, capacity, nature, and rating of the machinery and mechanical and other equipment. When required by this contract or by the Contracting Officer, the Contractor shall also obtain the Contracting Officer's approval of the material or articles which the Contractor contemplates incorporating into the work. When requesting approval, the Contractor shall provide full information concerning the material or articles. When directed to do so, the Contractor shall submit samples for approval at the Contractor's expense, with all shipping charges prepaid. Machinery, equipment, material, and articles that do not have the required approval shall be installed or used at the risk of subsequent rejection.

(c) All work under this contract shall be performed in a skillful and workmanlike manner. The Contracting Officer may require, in writing, that the Contractor remove from the work any employee the Contracting Officer deems incompetent, careless, or otherwise objectionable.

52.236-6 SUPERINTENDENCE BY THE CONTRACTOR (APR 1984)

At all times during performance of this contract and until the work is completed and accepted, the Contractor shall directly superintend the work or assign and have on the worksite a competent superintendent who is satisfactory to the Contracting Officer and has authority to act for the Contractor.

52.236-7 PERMITS AND RESPONSIBILITIES (NOV 1991)

The Contractor shall, without additional expense to the Government, be responsible for obtaining any necessary licenses and permits, and for complying with any Federal, State, and municipal laws, codes, and regulations applicable to the performance of the work. The Contractor shall also be responsible for all damages to persons or

property that occur as a result of the Contractor's fault or negligence. The Contractor shall also be responsible for all materials delivered and work performed until completion and acceptance of the entire work, except for any completed unit of work which may have been accepted under the contract.

52.236-8 OTHER CONTRACTS (APR 1984)

The Government may undertake or award other contracts for additional work at or near the site of the work under this contract. The Contractor shall fully cooperate with the other contractors and with Government employees and shall carefully adapt scheduling and performing the work under this contract to accommodate the additional work, heeding any direction that may be provided by the Contracting Officer. The Contractor shall not commit or permit any act that will interfere with the performance of work by any other contractor or by Government employees.

52.236-9 PROTECTION OF EXISTING VEGETATION, STRUCTURES, EQUIPMENT, UTILITIES, AND IMPROVEMENTS (APR 1984)

(a) The Contractor shall preserve and protect all structures, equipment, and vegetation (such as trees, shrubs, and grass) on or adjacent to the work site, which are not to be removed and which do not unreasonably interfere with the work required under this contract. The Contractor shall only remove trees when specifically authorized to do so, and shall avoid damaging vegetation that will remain in place. If any limbs or branches of trees are broken during contract performance, or by the careless operation of equipment, or by workmen, the Contractor shall trim those limbs or branches with a clean cut and paint the cut with a tree-pruning compound as directed by the Contracting Officer.

(b) The Contractor shall protect from damage all existing improvements and utilities

(1) at or near the work site, and

(2) on adjacent property of a third party, the locations of which are made known to or should be known by the Contractor. The Contractor shall repair any damage to those facilities, including those that are the property of a third party, resulting from failure to comply with the requirements of this contract or failure to exercise reasonable care in performing the work. If the Contractor fails or refuses to repair the damage promptly, the Contracting Officer may have the necessary work performed and charge the cost to the Contractor.

52.236-10 OPERATIONS AND STORAGE AREAS (APR 1984)

(a) The Contractor shall confine all operations (including storage of materials) on Government premises to areas authorized or approved by the Contracting Officer. The Contractor shall hold and save the Government, its officers and agents, free and harmless from liability of any nature occasioned by the Contractor's performance.

(b) Temporary buildings (e.g., storage sheds, shops, offices) and utilities may be erected by the Contractor only with the approval of the Contracting Officer and shall be built with labor and materials furnished by the Contractor without expense to the Government. The temporary buildings and utilities shall remain the property of the Contractor and shall be removed by the Contractor at its expense upon completion of the work. With the written consent of the Contracting Officer, the buildings and utilities may be abandoned and need not be removed.

(c) The Contractor shall, under regulations prescribed by the Contracting Officer, use only established roadways, or use temporary roadways constructed by the Contractor when and as authorized by the Contracting Officer. When materials are transported in prosecuting the work, vehicles shall not be loaded beyond the loading capacity recommended by the manufacturer of the vehicle or prescribed by any Federal, State, or local law or regulation. When it is necessary to cross curbs or sidewalks, the Contractor shall protect them from damage. The Contractor shall repair or pay for the repair of any damaged curbs, sidewalks, or roads.

52.236-11 USE AND POSSESSION PRIOR TO COMPLETION (APR 1984)

(a) The Government shall have the right to take possession of or use any completed or partially completed part of the work. Before taking possession of or using any work, the Contracting Officer shall furnish the Contractor a list of items of work remaining to be performed or corrected on those portions of the work that the Government intends to take possession of or use. However, failure of the Contracting Officer to list any item of work shall not relieve the Contractor of responsibility for complying with the terms of the contract. The Government's possession or use shall not be deemed an acceptance of any work under the contract.

(b) While the Government has such possession or use, the Contractor shall be relieved of the responsibility for the loss of or damage to the work resulting from the Government's possession or use, notwithstanding the terms of the clause in this contract entitled "Permits and Responsibilities." If prior possession or use by the Government delays the progress of the work or causes additional expense to the Contractor, an equitable adjustment shall be made in the contract price or the time of completion, and the contract shall be modified in writing accordingly.

52.236-12 CLEANING UP (APR 1984)

The Contractor shall at all times keep the work area, including storage areas, free from accumulations of waste materials. Before completing the work, the Contractor shall remove from the work and premises any rubbish, tools, scaffolding, equipment, and materials that are not the property of the Government. Upon completing the work, the Contractor shall leave the work area in a clean, neat, and orderly condition satisfactory to the Contracting Officer.

52.236-13 ACCIDENT PREVENTION (NOV 1991)

(a) The Contractor shall provide and maintain work environments and procedures which will

(1) safeguard the public and Government personnel, property, materials, supplies, and equipment exposed to Contractor operations and activities;

(2) avoid interruptions of Government operations and delays in project completion dates; and

(3) control costs in the performance of this contract.

(b) For these purposes on contracts for construction or dismantling, demolition, or removal of improvements, the Contractor shall-

(1) Provide appropriate safety barricades, signs, and signal lights;

(2) Comply with the standards issued by the Secretary of Labor at 29 CFR Part 1926 and 29 CFR Part 1910; and

(3) Ensure that any additional measures the Contracting Officer determines to be reasonably necessary for the purposes are taken.

(c) If this contract is for construction or dismantling, demolition or removal of improvements with any Department of Defense agency or component, the Contractor shall comply with all pertinent provisions of the latest version of U.S. Army Corps of Engineers Safety and Health Requirements Manual, EM 385-1-1, in effect on the date of the solicitation.

(d) Whenever the Contracting Officer becomes aware of any noncompliance with these requirements or any condition which poses a serious or imminent danger to the health or safety of the public or Government personnel, the Contracting Officer shall notify the Contractor orally, with written confirmation, and request immediate initiation of corrective action. This notice, when delivered to the Contractor or the Contractor's representative at the work site, shall be deemed sufficient notice of the noncompliance and that corrective action is required. After receiving the notice, the Contractor shall immediately take corrective action. If the Contractor fails or refuses to promptly take corrective action, the Contracting Officer may issue an order stopping all or part of the work until satisfactory corrective action has been taken. The Contractor shall not be entitled to any equitable adjustment of the contract price or extension of the performance schedule on any stop work order issued under this clause.

(e) The Contractor shall insert this clause, including this paragraph (e), with appropriate changes in the designation of the parties, in subcontracts.

52.236-15 SCHEDULES FOR CONSTRUCTION CONTRACTS (APR 1984)

(a) The Contractor shall, within five days after the work commences on the contract or another period of time determined by the Contracting Officer, prepare and submit to the Contracting Officer for approval three copies of a practicable schedule showing the order in which the Contractor proposes to perform the work, and the dates on which the Contractor contemplates starting and completing the several salient features of the work (including acquiring materials, plant, and equipment). The schedule shall be in the form of a progress chart of suitable scale to indicate appropriately the percentage of work scheduled for completion by any given date during the period. If the Contractor fails to submit a schedule within the time prescribed, the Contracting Officer may withhold approval of progress payments until the Contractor submits the required schedule.

(b) The Contractor shall enter the actual progress on the chart as directed by the Contracting Officer, and upon doing so shall immediately deliver three copies of the annotated schedule to the Contracting Officer. If, in the opinion of the Contracting Officer, the Contractor falls behind the approved schedule, the Contractor shall take steps necessary to improve its progress, including those that may be required by the Contracting Officer, without additional cost to the Government. In this circumstance, the Contracting Officer may require the Contractor to increase the number of shifts, overtime operations, days of work, and/or the amount of construction plant, and to submit for approval any supplementary schedule or schedules in chart form as the Contracting Officer deems necessary to demonstrate how the approved rate of progress will be regained.

(c) Failure of the Contractor to comply with the requirements of the Contracting Officer under this clause shall be grounds for a determination by the Contracting Officer that the Contractor is not prosecuting the work with sufficient diligence to ensure completion within the time specified in the contract. Upon making this determination, the Contracting Officer may terminate the Contractor's right to proceed with the work, or any separable part of it, in

accordance with the default terms of this contract.

52.236-14 AVAILABILITY AND USE OF UTILITY SERVICES (APR 1984)

(a) The Government shall make all reasonably required amounts of utilities available to the Contractor from existing outlets and supplies, as specified in the contract. Unless otherwise provided in the contract, the amount of each utility service consumed shall be charged to or paid for by the Contractor at prevailing rates charged to the Government or, where the utility is produced by the Government, at reasonable rates determined by the Contracting Officer. The Contractor shall carefully conserve any utilities furnished without charge.

(b) The Contractor, at its expense and in a workmanlike manner satisfactory to the Contracting Officer, shall install and maintain all necessary temporary connections and distribution lines, and all meters required to measure the amount of each utility used for the purpose of determining charges. Before final acceptance of the work by the Government, the Contractor shall remove all the temporary connections, distribution lines, meters, and associated paraphernalia.

52.236-17 LAYOUT OF WORK (APR 1984)

The Contractor shall lay out its work from Government established base lines and bench marks indicated on the drawings, and shall be responsible for all measurements in connection with the layout. The Contractor shall furnish, at its own expense, all stakes, templates, platforms, equipment, tools, materials, and labor required to lay out any part of the work. The Contractor shall be responsible for executing the work to the lines and grades that may be established or indicated by the Contracting Officer. The Contractor shall also be responsible for maintaining and preserving all stakes and other marks established by the Contracting Officer until authorized to remove them. If such marks are destroyed by the Contractor or through its negligence before their removal is authorized, the Contracting Officer may replace them and deduct the expense of the replacement from any amounts due or to become due to the Contractor.

52.236-21 SPECIFICATIONS AND DRAWINGS FOR CONSTRUCTION (FEB 1997)

(a) The Contractor shall keep on the work site a copy of the drawings and specifications and shall at all times give the Contracting Officer access thereto. Anything mentioned in the specifications and not shown on the drawings, or shown on the drawings and not mentioned in the specifications, shall be of like effect as if shown or mentioned in both. In case of difference between drawings and specifications, the specifications shall govern. In case of discrepancy in the figures, in the drawings, or in the specifications, the matter shall be promptly submitted to the Contracting Officer, who shall promptly make a determination in writing. Any adjustment by the Contractor without such a determination shall be at its own risk and expense. The Contracting Officer shall furnish from time to time such detailed drawings and other information as considered necessary, unless otherwise provided.

(b) Wherever in the specifications or upon the drawings the words "directed", "required", "ordered", "designated", "prescribed", or words of like import are used, it shall be understood that the "direction", "requirement", "order", "designation", or "prescription", of the Contracting Officer is intended and similarly the words "approved", "acceptable", "satisfactory", or words of like import shall mean "approved by," or "acceptable to", or "satisfactory to" the Contracting Officer, unless otherwise expressly stated.

(c) Where "as shown," as indicated", "as detailed", or words of similar import are used, it shall be understood that the reference is made to the drawings accompanying this contract unless stated otherwise. The word "provided" as used herein shall be understood to mean "provide complete in place," that is "furnished and installed".

(d) Shop drawings means drawings, submitted to the Government by the Contractor, subcontractor, or any lower tier subcontractor pursuant to a construction contract, showing in detail (1) the proposed fabrication and assembly of structural elements, and (2) the installation (i.e., fit, and attachment details) of materials or equipment. It includes drawings, diagrams, layouts, schematics, descriptive literature, illustrations, schedules, performance and test data, and similar materials furnished by the contractor to explain in detail specific portions of the work required by the contract. The Government may duplicate, use, and disclose in any manner and for any purpose shop drawings delivered under this contract.

(e) If this contract requires shop drawings, the Contractor shall coordinate all such drawings, and review them for accuracy, completeness, and compliance with contract requirements and shall indicate its approval thereon as evidence of such coordination and review. Shop drawings submitted to the Contracting Officer without evidence of the Contractor's approval may be returned for resubmission. The Contracting Officer will indicate an approval or disapproval of the shop drawings and if not approved as submitted shall indicate the Government's reasons therefor. Any work done before such approval shall be at the Contractor's risk. Approval by the Contracting Officer shall not relieve the Contractor from responsibility for any errors or omissions in such drawings, nor from responsibility for complying with the requirements of this contract, except with respect to variations described and approved in accordance with (f) below.

(f) If shop drawings show variations from the contract requirements, the Contractor shall describe such variations in writing, separate from the drawings, at the time of submission. If the Contracting Officer approves any such variation, the Contracting Officer shall issue an appropriate contract modification, except that, if the variation is minor or does not involve a change in price or in time of performance, a modification need not be issued.

(g) The Contractor shall submit to the Contracting Officer for approval four copies (unless otherwise indicated) of all shop drawings as called for under the various headings of these specifications. Three sets (unless otherwise indicated) of all shop drawings, will be retained by the Contracting Officer and one set will be returned to the Contractor.

52.236-22 DESIGN WITHIN FUNDING LIMITATIONS (APR 1984)

(a) The Contractor shall accomplish the design services required under this contract so as to permit the award of a contract, using standard Federal Acquisition Regulation procedures for the construction of the facilities designed at a price that does not exceed the estimated construction contract price as set forth in paragraph (c) below. When bids or proposals for the construction contract are received that exceed the estimated price, the contractor shall perform such redesign and other services as are necessary to permit contract award within the funding limitation. These additional services shall be performed at no increase in the price of this contract. However, the Contractor shall not be required to perform such additional services at no cost to the Government if the unfavorable bids or proposals are the result of conditions beyond its reasonable control.

(b) The Contractor will promptly advise the Contracting Officer if it finds that the project being designed will exceed or is likely to exceed the funding limitations and it is unable to design a usable facility within these limitations. Upon receipt of such information, the Contracting Officer will review the Contractor's revised estimate

of construction cost. The Government may, if it determines that the estimated construction contract price set forth in this contract is so low that award of a construction contract not in excess of such estimate is improbable, authorize a change in scope or materials as required to reduce the estimated construction cost to an amount within the estimated construction contract price set forth in paragraph (c) below, or the Government may adjust such estimated construction contract price. When bids or proposals are not solicited or are unreasonably delayed, the Government shall prepare an estimate of constructing the design submitted and such estimate shall be used in lieu of bids or proposals to determine compliance with the funding limitation.

(c) The estimated construction contract price for the project described in this contract is $

52.236-23 RESPONSIBILITY OF THE ARCHITECT-ENGINEER CONTRACTOR (APR 1984)

(a) The Contractor shall be responsible for the professional quality, technical accuracy, and the coordination of all designs, drawings, specifications, and other services furnished by the Contractor under this contract. The Contractor shall, without additional compensation, correct or revise any errors or deficiencies in its designs, drawings, specifications, and other services.

(b) Neither the Government's review, approval or acceptance of, nor payment for, the services required under this contract shall be construed to operate as a waiver of any rights under this contract or of any cause of action arising out of the performance of this contract, and the Contractor shall be and remain liable to the Government in accordance with applicable law for all damages to the Government caused by the Contractor's negligent performance of any of the services furnished under this contract.

(c) The rights and remedies of the Government provided for under this contract are in addition to any other rights and remedies provided by law.

(d) If the Contractor is comprised of more than one legal entity, each such entity shall be jointly and severally liable hereunder.

52.236-24 WORK OVERSIGHT IN ARCHITECT-ENGINEER CONTRACTS (APR 1984)

The extent and character of the work to be done by the Contractor shall be subject to the general oversight, supervision, direction, control, and approval of the Contracting Officer.

52.236-25 REQUIREMENTS FOR REGISTRATION OF DESIGNERS (APR 1984)

The design of architectural, structural, mechanical, electrical, civil, or other engineering features of the work shall be accomplished or reviewed and approved by architects or engineers registered to practice in the particular professional field involved in a State or possession of the United States, in Puerto Rico, or in the District of Columbia.

52.242-13 BANKRUPTCY. (JUL 1995)

In the event the Contractor enters into proceedings relating to bankruptcy, whether voluntary or involuntary, the

Contractor agrees to furnish, by certified mail or electronic commerce method authorized by the contract, written notification of the bankruptcy to the Contracting Officer responsible for administering the contract. This notification shall be furnished within five days of the initiation of the proceedings relating to bankruptcy filing. This notification shall include the date on which the bankruptcy petition was filed, the identity of the court in which the bankruptcy petition was filed, and a listing of Government contract numbers and contracting offices for all Government contracts against which final payment has not been made. This obligation remains in effect until final payment under this contract.

52.236-26 PRECONSTRUCTION CONFERENCE (FEB 1995)

If the Contracting Officer decides to conduct a preconstruction conference, the successful offeror will be notified and will be required to attend. The Contracting Officer's notification will include specific details regarding the date, time, and location of the conference, any need for attendance by subcontractors, and information regarding the items to be discussed.

52.242-14 SUSPENSION OF WORK (APR 1984)

(a) The Contracting Officer may order the Contractor, in writing, to suspend, delay, or interrupt all or any part of the work of this contract for the period of time that the Contracting Officer determines appropriate for the convenience of the Government.

(b) If the performance of all or any part of the work is, for an unreasonable period of time, suspended, delayed, or interrupted (1) by an act of the Contracting Officer in the administration of this contract, or (2) by the Contracting Officer's failure to act within the time specified in this contract (or within a reasonable time if not specified), an adjustment shall be made for any increase in the cost of performance of this contract (excluding profit) necessarily caused by the unreasonable suspension, delay, or interruption, and the contract modified in writing accordingly. However, no adjustment shall be made under this clause for any suspension, delay, or interruption to the extent that performance would have been so suspended, delayed, or interrupted by any other cause, including the fault or negligence of the Contractor, or for which an equitable adjustment is provided for or excluded under any other term or condition of this contract. (c) A claim under this clause shall not be allowed (1) for any costs incurred more than 20 days before the Contractor shall have notified the Contracting Officer in writing of the act or failure to act involved (but this requirement shall not apply as to a claim resulting from a suspension order), and (2) unless the claim, in an amount stated, is asserted in writing as soon as practicable after the termination of the suspension, delay, or interruption, but not later than the date of final payment under the contract.

52.246-12 INSPECTION OF CONSTRUCTION (AUG 1996)

(a) Definition. "Work" includes, but is not limited to, materials, workmanship, and manufacture and fabrication of components.

(b) The Contractor shall maintain an adequate inspection system and perform such inspections as will ensure that the work performed under the contract conforms to contract requirements. The Contractor shall maintain complete inspection records and make them available to the Government. All work shall be conducted under the general direction of the Contracting Officer and is subject to Government inspection and test at all places and at all

reasonable times before acceptance to ensure strict compliance with the terms of the contract.

(c) Government inspections and tests are for the sole benefit of the Government and do not--

(1) Relieve the Contractor of responsibility for providing adequate quality control measures;

(2) Relieve the Contractor of responsibility for damage to or loss of the material before acceptance;

(3) Constitute or imply acceptance; or

(4) Affect the continuing rights of the Government after acceptance of the completed work under paragraph (i) of this section.

(d) The presence or absence of a Government inspector does not relieve the Contractor from any contract requirement, nor is the inspector authorized to change any term or condition of the specification without the Contracting Officer's written authorization.

(e) The Contractor shall promptly furnish, at no increase in contract price, all facilities, labor, and material reasonably needed for performing such safe and convenient inspections and tests as may be required by the Contracting Officer. The Government may charge to the Contractor any additional cost of inspection or test when work is not ready at the time specified by the Contractor for inspection or test, or when prior rejection makes reinspection or retest necessary. The Government shall perform all inspections and tests in a manner that will not unnecessarily delay the work. Special, full size, and performance tests shall be performed as described in the contract.

(f) The Contractor shall, without charge, replace or correct work found by the Government not to conform to contract requirements, unless in the public interest the Government consents to accept the work with an appropriate adjustment in contract price. The Contractor shall promptly segregate and remove rejected material from the premises.

(g) If the Contractor does not promptly replace or correct rejected work, the Government may (1) by contract or otherwise, replace or correct the work and charge the cost to the Contractor or (2) terminate for default the Contractor's right to proceed.

(h) If, before acceptance of the entire work, the Government decides to examine already completed work by removing it or tearing it out, the Contractor, on request, shall promptly furnish all necessary facilities, labor, and material. If the work is found to be defective or nonconforming in any material respect due to the fault of the Contractor or its subcontractors, the Contractor shall defray the expenses of the examination and of satisfactory reconstruction. However, if the work is found to meet contract requirements, the Contracting Officer shall make an equitable adjustment for the additional services involved in the examination and reconstruction, including, if completion of the work was thereby delayed, an extension of time.

(i) Unless otherwise specified in the contract, the Government shall accept, as promptly as practicable after completion and inspection, all work required by the contract or that portion of the work the Contracting Officer determines can be accepted separately. Acceptance shall be final and conclusive except for latent defects, fraud, gross mistakes amounting to fraud, or the Government's rights under any warranty or guarantee.

52.243-4 CHANGES (AUG 1987)

(a) The Contracting Officer may, at any time, without notice to the sureties, if any, by written order designated or indicated to be a change order, make changes in the work within the general scope of the contract, including changes--

(1) In the specifications (including drawings and designs);

(2) In the method or manner of performance of the work;

(3) In the Government-furnished facilities, equipment, materials, services, or site; or

(4) Directing acceleration in the performance of the work.

(b) Any other written or oral order (which, as used in this paragraph (b), includes direction, instruction, interpretation, or determination) from the Contracting Officer that causes a change shall be treated as a change order under this clause; provided, that the Contractor gives the Contracting Officer written notice stating

(1) the date, circumstances, and source of the order and

(2) that the Contractor regards the order as a change order.

(c) Except as provided in this clause, no order, statement, or conduct of the Contracting Officer shall be treated as a change under this clause or entitle the Contractor to an equitable adjustment.

(d) If any change under this clause causes an increase or decrease in the Contractor's cost of, or the time required for, the performance of any part of the work under this contract, whether or not changed by any such order, the Contracting Officer shall make an equitable adjustment and modify the contract in writing. However, except for an adjustment based on defective specifications, no adjustment for any change under paragraph (b) of this clause shall be made for any costs incurred more than 20 days before the Contractor gives written notice as required. In the case of defective specifications for which the Government is responsible, the equitable adjustment shall include any increased cost reasonably incurred by the Contractor in attempting to comply with the defective specifications.

(e) The Contractor must assert its right to an adjustment under this clause within 30 days after

(1) receipt of a written change order under paragraph (a) of this clause or (2) the furnishing of a written notice under paragraph (b) of this clause, by submitting to the Contracting Officer a written statement describing the general nature and amount of the proposal, unless this period is extended by the Government. The statement of proposal for adjustment may be included in the notice under paragraph (b) above.

(f) No proposal by the Contractor for an equitable adjustment shall be allowed if asserted after final payment under this contract.

52.248-3 VALUE ENGINEERING--CONSTRUCTION (FEB 2000)

(a) General. The Contractor is encouraged to develop, prepare, and submit value engineering change proposals (VECP's) voluntarily. The Contractor shall share in any instant contract savings realized from accepted VECP's, in accordance with paragraph (f) below.

(b) Definitions. "Collateral costs," as used in this clause, means agency costs of operation, maintenance, logistic support, or Government-furnished property.

"Collateral savings," as used in this clause, means those measurable net reductions resulting from a VECP in the agency's overall projected collateral costs, exclusive of acquisition savings, whether or not the acquisition cost changes.

"Contractor's development and implementation costs," as used in this clause, means those costs the Contractor incurs on a VECP specifically in developing, testing, preparing, and submitting the VECP, as well as those costs the Contractor incurs to make the contractual changes required by Government acceptance of a VECP.

"Government costs," as used in this clause, means those agency costs that result directly from developing and implementing the VECP, such as any net increases in the cost of testing, operations, maintenance, and logistic support. The term does not include the normal administrative costs of processing the VECP.

"Instant contract savings," as used in this clause, means the estimated reduction in Contractor cost of performance resulting from acceptance of the VECP, minus allowable Contractor's development and implementation costs, including subcontractors' development and implementation costs (see paragraph (h) below).

"Value engineering change proposal (VECP)" means a proposal that--

(1) Requires a change to this, the instant contract, to implement; and

(2) Results in reducing the contract price or estimated cost without impairing essential functions or characteristics; provided, that it does not involve a change--

(i) In deliverable end item quantities only; or

(ii) To the contract type only.

(c) VECP preparation. As a minimum, the Contractor shall include in each VECP the information described in subparagraphs (1) through (7) below. If the proposed change is affected by contractually required configuration management or similar procedures, the instructions in those procedures relating to format, identification, and priority assignment shall govern VECP preparation. The VECP shall include the following:

(1) A description of the difference between the existing contract requirement and that proposed, the comparative advantages and disadvantages of each, a justification when an item's function or characteristics are being altered, and the effect of the change on the end item's performance.

(2) A list and analysis of the contract requirements that must be changed if the VECP is accepted, including any suggested specification revisions.

(3) A separate, detailed cost estimate for

(i) the affected portions of the existing contract requirement and

(ii) the VECP. The cost reduction associated with the VECP shall take into account the Contractor's allowable development and implementation costs, including any amount attributable to subcontracts under paragraph (h) below.

(4) A description and estimate of costs the Government may incur in implementing the VECP, such as test and evaluation and operating and support costs.

(5) A prediction of any effects the proposed change would have on collateral costs to the agency.

(6) A statement of the time by which a contract modification accepting the VECP must be issued in order to achieve the maximum cost reduction, noting any effect on the contract completion time or delivery schedule.

(7) Identification of any previous submissions of the VECP, including the dates submitted, the agencies and contract numbers involved, and previous Government actions, if known.

(d) Submission. The Contractor shall submit VECP's to the Resident Engineer at the worksite, with a copy to the Contracting Officer.

(e) Government action.

(1) The Contracting Officer will notify the Contractor of the status of the VECP within 45 calendar days after the contracting office receives it. If additional time is required, the Contracting Officer will notify the Contractor within the 45-day period and provide the reason for the delay and the expected date of the decision. The Government will process VECP's expeditiously; however, it shall not be liable for any delay in acting upon a VECP.

If the VECP is not accepted, the Contracting Officer will notify the Contractor in writing, explaining the reasons for rejection. The Contractor may withdraw any VECP, in whole or in part, at any time before it is accepted by the Government. The Contracting Officer may require that the Contractor provide written notification before undertaking significant expenditures for VECP effort.

Any VECP may be accepted, in whole or in part, by the Contracting Officer's award of a modification to this contract citing this clause. The Contracting Officer may accept the VECP, even though an agreement on price reduction has not been reached, by issuing the Contractor a notice to proceed with the change. Until a notice to proceed is issued or a contract modification applies a VECP to this contract, the Contractor shall perform in accordance with the existing contract. The decision to accept or reject all or part of any VECP is a unilateral decision made solely at the discretion of the Contracting Officer.

(f) Sharing.

(1) Rates. The Government's share of savings is determined by subtracting Government costs from instant contract savings and multiplying the result by

(i) 45 percent for fixed-price contracts or

(ii) 75 percent for cost-reimbursement contracts.

(2) Payment. Payment of any share due the Contractor for use of a VECP on this contract shall be authorized by a modification to this contract to--

(i) Accept the VECP;

(ii) Reduce the contract price or estimated cost by the amount of instant contract savings; and

(iii) Provide the Contractor's share of savings by adding the amount calculated to the contract price or fee.

(g) Collateral savings. If a VECP is accepted, the Contracting Officer will increase the instant contract amount by 20 percent of any projected collateral savings determined to be realized in a typical year of use after subtracting any Government costs not previously offset. However, the Contractor's share of collateral savings will not exceed the contract's firm-fixed-price or estimated cost, at the time the VECP is accepted, or $100,000, whichever is greater. The Contracting Officer is the sole determiner of the amount of collateral savings.

(h) Subcontracts. The Contractor shall include an appropriate value engineering clause in any subcontract of $50,000 or more and may include one in subcontracts of lesser value. In computing any adjustment in this contract's price under paragraph (f) above, the Contractor's allowable development and implementation costs shall include any subcontractor's allowable development and implementation costs clearly resulting from a VECP accepted by the Government under this contract, but shall exclude any value engineering incentive payments to a subcontractor. The Contractor may choose any arrangement for subcontractor value engineering incentive payments; provided, that these payments shall not reduce the Government's share of the savings resulting from the VECP.

(i) Data. The Contractor may restrict the Government's right to use any part of a VECP or the supporting data by marking the following legend on the affected parts:

"These data, furnished under the Value Engineering-- Construction clause of contract . . . . . , shall not be disclosed outside the Government or duplicated, used, or disclosed, in whole or in part, for any purpose other than to evaluate a value engineering change proposal submitted under the clause. This restriction does not limit the Government's right to use information contained in these data if it has been obtained or is otherwise available from the Contractor or from another source without limitations." If a VECP is accepted, the Contractor hereby grants the Government unlimited rights in the VECP and supporting data, except that, with respect to data qualifying and submitted as limited rights technical data, the Government shall have the rights specified in the contract modification implementing the VECP and shall appropriately mark the data. (The terms "unlimited rights" and "limited rights" are defined in Part 27 of the Federal Acquisition Regulation.)

(End of clause)

52.249-2 TERMINATION FOR CONVENIENCE OF THE GOVERNMENT (FIXED-PRICE) (SEP 1996) - ALTERNATE I (SEP 1996)

(a) The Government may terminate performance of work under this contract in whole or, from time to time, in part if the Contracting Officer determines that a termination is in the Government's interest. The Contracting Officer shall terminate by delivering to the Contractor a Notice of Termination specifying the extent of termination and the effective date.

(b) After receipt of a Notice of Termination, and except as directed by the Contracting Officer, the Contractor shall immediately proceed with the following obligations, regardless of any delay in determining or adjusting any amounts due under this clause:

(1) Stop work as specified in the notice.

(2) Place no further subcontracts or orders (referred to as subcontracts in this clause) for materials, services, or facilities, except as necessary to complete the continued portion of the contract.

(3) Terminate all subcontracts to the extent they relate to the work terminated.

(4) Assign to the Government, as directed by the Contracting Officer, all right, title, and interest of the Contractor under the subcontracts terminated, in which case the Government shall have the right to settle or to pay any termination settlement proposal arising out of those terminations.

(5) With approval or ratification to the extent required by the Contracting Officer, settle all outstanding liabilities and termination settlement proposals arising from the termination of subcontracts; the approval or ratification will be final for purposes of this clause.

(6) As directed by the Contracting Officer, transfer title and deliver to the Government (i) the fabricated or unfabricated parts, work in process, completed work, supplies, and other material produced or acquired for the work terminated, and (ii) the completed or partially completed plans, drawings, information, and other property that, if the contract had been completed, would be required to be furnished to the Government.

(7) Complete performance of the work not terminated.

(8) Take any action that may be necessary, or that the Contracting Officer may direct, for the protection and preservation of the property related to this contract that is in the possession of the Contractor and in which the Government has or may acquire an interest.

(9) Use its best efforts to sell, as directed or authorized by the Contracting Officer, any property of the types referred to in subparagraph (b)(6) of this clause; provided, however, that the Contractor (i) is not required to extend credit to any purchaser and (ii) may acquire the property under the conditions prescribed by, and at prices approved by, the Contracting Officer. The proceeds of any transfer or disposition will be applied to reduce any payments to be made by the Government under this contract, credited to the price or cost of the work, or paid in any other manner directed by the Contracting Officer.

(c) The Contractor shall submit complete termination inventory schedules no later than 120 days from the effective date of termination, unless extended in writing by the Contracting Officer upon written request of the Contractor within this 120-day period.

(d) After expiration of the plant clearance period as defined in Subpart 45.6 of the Federal Acquisition Regulation, the Contractor may submit to the Contracting Officer a list, certified as to quantity and quality, of termination inventory not previously disposed of, excluding items authorized for disposition by the Contracting Officer. The Contractor may request the Government to remove those items or enter into an agreement for their storage. Within 15 days, the Government will accept title to those items and remove them or enter into a storage agreement. The Contracting Officer may verify the list upon removal of the items, or if stored, within 45 days from submission of the list, and shall correct the list, as necessary, before final settlement.

(e) After termination, the Contractor shall submit a final termination settlement proposal to the Contracting Officer in the form and with the certification prescribed by the Contracting Officer. The Contractor shall submit the

proposal promptly, but no later than 1 year from the effective date of termination, unless extended in writing by the Contracting Officer upon written request of the Contractor within this 1-year period. However, if the Contracting Officer determines that the facts justify it, a termination settlement proposal may be received and acted on after 1 year or any extension. If the Contractor fails to submit the proposal within the time allowed, the Contracting Officer may determine, on the basis of information available, the amount, if any, due the Contractor because of the termination and shall pay the amount determined.

(f) Subject to paragraph (e) of this clause, the Contractor and the Contracting Officer may agree upon the whole or any part of the amount to be paid or remaining to be paid because of the termination. The amount may include a reasonable allowance for profit on work done. However, the agreed amount, whether under this paragraph (g) or paragraph (g) of this clause, exclusive of costs shown in subparagraph (g)(3) of this clause, may not exceed the total contract price as reduced by (1) the amount of payments previously made and (2) the contract price of work not terminated. The contract shall be modified, and the Contractor paid the agreed amount. Paragraph (g) of this clause shall not limit, restrict, or affect the amount that may be agreed upon to be paid under this paragraph.

(g) If the Contractor and Contracting Officer fail to agree on the whole amount to be paid the Contractor because of the termination of work, the Contracting Officer shall pay the Contractor the amounts determined as follows, but without duplication of any amounts agreed upon under paragraph (f) of this clause:

(1) For contract work performed before the effective date of termination, the total (without duplication of any items) of--

(i) The cost of this work;

(ii) The cost of settling and paying termination settlement proposals under terminated subcontracts that are properly chargeable to the terminated portion of the contract if not included in subdivision (g)(1)(i) of this clause; and

(iii) A sum, as profit on subdivision (g)(1)(i) of this clause, determined by the Contracting Officer under 49.202 of the Federal Acquisition Regulation, in effect on the date of this contract, to be fair and reasonable; however, if it appears that the Contractor would have sustained a loss on the entire contract had it been completed, the Contracting Officer shall allow no profit under this subdivision (iii) and shall reduce the settlement to reflect the indicated rate of loss.

(2) The reasonable costs of settlement of the work terminated, including--

(i) Accounting, legal, clerical, and other expenses reasonably necessary for the preparation of termination settlement proposals and supporting data;

(ii) The termination and settlement of subcontracts (excluding the amounts of such settlements); and

(iii) Storage, transportation, and other costs incurred, reasonably necessary for the preservation, protection, or disposition of the termination inventory.

(h) Except for normal spoilage, and except to the extent that the Government expressly assumed the risk of loss, the Contracting Officer shall exclude from the amounts payable to the Contractor under paragraph (g) of this clause, the fair value, as determined by the Contracting Officer, of property that is destroyed, lost, stolen, or damaged so as to become undeliverable to the Government or to a buyer.

(i) The cost principles and procedures of Part 31 of the Federal Acquisition Regulation, in effect on the date of this contract, shall govern all costs claimed, agreed to, or determined under this clause.

(j) The Contractor shall have the right of appeal, under the Disputes clause, from any determination made by the Contracting Officer under paragraph (e), (g), or (l) of this clause, except that if the Contractor failed to submit the termination settlement proposal or request for equitable adjustment within the time provided in paragraph (e) or (l), respectively, and failed to request a time extension, there is no right of appeal.

(k) In arriving at the amount due the Contractor under this clause, there shall be deducted--

(1) All unliquidated advance or other payments to the Contractor under the terminated portion of this contract;

(2) Any claim which the Government has against the Contractor under this contract; and

(3) The agreed price for, or the proceeds of sale of, materials, supplies, or other things acquired by the Contractor or sold under the provisions of this clause and not recovered by or credited to the Government.

(l) If the termination is partial, the Contractor may file a proposal with the Contracting Officer for an equitable adjustment of the price(s) of the continued portion of the contract. The Contracting Officer shall make any equitable adjustment agreed upon. Any proposal by the Contractor for an equitable adjustment under this clause shall be requested within 90 days from the effective date of termination unless extended in writing by the Contracting Officer.

(m)(1) The Government may, under the terms and conditions it prescribes, make partial payments and payments against costs incurred by the Contractor for the terminated portion of the contract, if the Contracting Officer believes the total of these payments will not exceed the amount to which the Contractor will be entitled.

(2) If the total payments exceed the amount finally determined to be due, the Contractor shall repay the excess to the Government upon demand, together with interest computed at the rate established by the Secretary of the Treasury under 50 U.S.C. App. 1215(b)(2). Interest shall be computed for the period from the date the excess payment is received by the Contractor to the date the excess is repaid. Interest shall not be charged on any excess payment due to a reduction in the Contractor's termination settlement proposal because of retention or other disposition of termination inventory until 10 days after the date of the retention or disposition, or a later date determined by the Contracting Officer because of the circumstances.

(n) Unless otherwise provided in this contract or by statute, the Contractor shall maintain all records and documents relating to the terminated portion of this contract for 3 years after final settlement. This includes all books and other evidence bearing on the Contractor's costs and expenses under this contract. The Contractor shall make these records and documents available to the Government, at the Contractor's office, at all reasonable times, without any direct charge. If approved by the Contracting Officer, photographs, microphotographs, or other authentic reproductions may be maintained instead of original records and documents.

52.249-10 DEFAULT (FIXED-PRICE CONSTRUCTION) (APR 1984)

(a) If the Contractor refuses or fails to prosecute the work or any separable part, with the diligence that will insure its completion within the time specified in this contract including any extension, or fails to complete the work within this time, the Government may, by written notice to the Contractor, terminate the right to proceed with the work (or

the separable part of the work) that has been delayed. In this event, the Government may take over the work and complete it by contract or otherwise, and may take possession of and use any materials, appliances, and plant on the work site necessary for completing the work. The Contractor and its sureties shall be liable for any damage to the Government resulting from the Contractor's refusal or failure to complete the work within the specified time, whether or not the Contractor's right to proceed with the work is terminated. This liability includes any increased costs incurred by the Government in completing the work.

(b) The Contractor's right to proceed shall not be terminated nor the Contractor charged with damages under this clause, if--

(1) The delay in completing the work arises from unforeseeable causes beyond the control and without the fault or negligence of the Contractor. Examples of such causes include

(i) acts of God or of the public enemy,

(ii) acts of the Government in either its sovereign or contractual capacity,

(iii) acts of another Contractor in the performance of a contract with the Government,

(iv) fires,

(v) floods,

(vi) epidemics,

(vii) quarantine restrictions,

(viii) strikes,

(ix) freight embargoes,

(x) unusually severe weather, or delays of subcontractors or suppliers at any tier arising from unforeseeable causes beyond the control and without the fault or negligence of both the Contractor and the subcontractors or suppliers; and

(2) The Contractor, within 10 days from the beginning of any delay (unless extended by the Contracting Officer), notifies the Contracting Officer in writing of the causes of delay. The Contracting Officer shall ascertain the facts and the extent of delay. If, in the judgment of the Contracting Officer, the findings of fact warrant such action, the time for completing the work shall be extended. The findings of the Contracting Officer shall be final and conclusive on the parties, but subject to appeal under the Disputes clause.

(c) If, after termination of the Contractor's right to proceed, it is determined that the Contractor was not in default, or that the delay was excusable, the rights and obligations of the parties will be the same as if the termination had been issued for the convenience of the Government.

The rights and remedies of the Government in this clause are in addition to any other rights and remedies provided by law or under this contract.

52.252-6 AUTHORIZED DEVIATIONS IN CLAUSES (APR 1984)

(a) The use in this solicitation or contract of any Federal Acquisition Regulation (48 CFR Chapter 1) clause with an authorized deviation is indicated by the addition of "(DEVIATION)" after the date of the clause.

(b) The use in this solicitation or contract of any _____ (48 CFR _____) clause with an authorized deviation is indicated by the addition of "(DEVIATION)" after the name of the regulation.

52.252-4 ALTERATIONS IN CONTRACT (APR 1984)

Portions of this contract are altered as follows:

52.253-1 COMPUTER GENERATED FORMS (JAN 1991)

(a) Any data required to be submitted on a Standard or Optional Form prescribed by the Federal Acquisition Regulation (FAR) may be submitted on a computer generated version of the form, provided there is no change to the name, content, or sequence of the data elements on the form, and provided the form carries the Standard or Optional Form number and edition date.

(b) Unless prohibited by agency regulations, any data required to be submitted on an agency unique form prescribed by an agency supplement to the FAR may be submitted on a computer generated version of the form provided there is no change to the name, content, or sequence of the data elements on the form and provided the form carries the agency form number and edition date.

(c) If the Contractor submits a computer generated version of a form that is different than the required form, then the rights and obligations of the parties will be determined based on the content of the required form.

252.201-7000 CONTRACTING OFFICER'S REPRESENTATIVE (DEC 1991)

(a) "Definition. Contracting officer's representative" means an individual designated in accordance with subsection 201.602-2 of the Defense Federal Acquisition Regulation Supplement and authorized in writing by the contracting officer to perform specific technical or administrative functions.

(b) If the Contracting Officer designates a contracting officer's representative (COR), the Contractor will receive a copy of the written designation. It will specify the extent of the COR's authority to act on behalf of the contracting officer. The COR is not authorized to make any commitments or changes that will affect price, quality, quantity, delivery, or any other term or condition of the contract.

(End of clause)

252.203-7001 PROHIBITION ON PERSONS CONVICTED OF FRAUD OR OTHER DEFENSE-CONTRACT-RELATED FELONIES (MAR 1999)

(a) *Definitions.* As used in this clause—

(1) "Arising out of a contract with the DoD" means any act in connection with—

(i) Attempting to obtain;

(ii) Obtaining, or

(iii) Performing a contract or first-tier subcontract of any agency, department, or component of the Department of Defense (DoD).

(2) "Conviction of fraud or any other felony" means any conviction for fraud or a felony in violation of state or Federal criminal statutes, whether entered on a verdict or plea, including a plea of *nolo contendere*, for which sentence has been imposed.

(3) "Date of conviction" means the date judgment was entered against the individual.

(b) Any individual who is convicted after September 29, 1988, of fraud or any other felony arising out of a contract with the DoD is prohibited from serving--

(1) In a management or supervisory capacity on any DoD contract or first-tier subcontract;

(2) On the board of directors of any DoD contractor or first-tier subcontractor;

(3) As a consultant, agent, or representative for any DoD contractor or first-tier subcontractor; or

(4) In any other capacity with the authority to influence, advise, or control the decisions of any DoD contractor or subcontractor with regard to any DoD contract or first-tier subcontract.

(c) Unless waived, the prohibition in paragraph (b) of this clause applies for not less than 5 years from the date of conviction.

(d) 10 U.S.C. 2408 provides that a defense contractor or first-tier subcontractor shall be subject to a criminal penalty of not more than $500,000 if convicted of knowingly—

(1) Employing a person under a prohibition specified in paragraph (b) of this clause; or

(2) Allowing such a person to serve on the board of directors of the contractor or first-tier subcontractor.

(e) In addition to the criminal penalties contained in 10 U.S.C. 2408, the Government may consider other available remedies, such as—

(1) Suspension or debarment;

(2) Cancellation of the contract at no cost to the Government; or

(3) Termination of the contract for default.

(f) The Contractor may submit written requests for waiver of the prohibition in paragraph (b) of this clause to the Contracting Officer. Requests shall clearly identify—

(1) The person involved;

(2) The nature of the conviction and resultant sentence or punishment imposed;

(3) The reasons for the requested waiver; and

(4) An explanation of why a waiver is in the interest of national security.

(g) The Contractor agrees to include the substance of this clause, appropriately modified to reflect the identity and relationship of the parties, in all first-tier subcontracts exceeding the simplified acquisition threshold in Part 2 of the Federal Acquisition Regulation, except those for commercial items or components.

(h) Pursuant to 10 U.S.C. 2408(c), defense contractors and subcontractors may obtain information as to whether a particular person has been convicted of fraud or any other felony arising out of a contract with the DoD by contacting The Office of Justice Programs, The Denial of Federal Benefits Office, U.S. Department of Justice, telephone (202) 616-3507.

(End of clause)

252.204-7001 COMMERCIAL AND GOVERNMENT ENTITY (CAGE) CODE REPORTING (AUG 199)

(a) The offeror is requested to enter its CAGE code on its offer in the block with its name and address. The CAGE code entered must be for that name and address. Enter ``CAGE" before the number.

(b) If the offeror does not have a CAGE code, it may ask the Contracting Officer to request one from the Defense Logistics Information Service (DLIS). The Contracting Officer will--

(1) Ask the Contractor to complete section B of a DD Form 2051, Request for Assignment of a Commercial and Government Entity (CAGE) Code;

(2) Complete section A and forward the form to DLIS; and

(3) Notify the Contractor of its assigned CAGE code.

(c) Do not delay submission of the offer pending receipt of a CAGE code.

(End of provision)

252.223-7001 HAZARD WARNING LABELS (DEC 1991)

(a) "Hazardous material," as used in this clause, is defined in the Hazardous Material Identification and Material Safety Data clause of this contract.

(b) The Contractor shall label the item package (unit container) of any hazardous material to be delivered under this contract in accordance with the Hazard Communication Standard (29 CFR 1910.1200 et seq). The Standard requires that the hazard warning label conform to the requirements of the standard unless the material is otherwise subject to the labeling requirements of one of the following statutes:

(1) Federal Insecticide, Fungicide and Rodenticide Act;

(2) Federal Food, Drug and Cosmetics Act;

(3) Consumer Product Safety Act;

(4) Federal Hazardous Substances Act; or

(5) Federal Alcohol Administration Act.

(c) The Offeror shall list which hazardous material listed in the Hazardous Material Identification and Material Safety Data clause of this contract will be labeled in accordance with one of the Acts in paragraphs (b)(1) through (5) of this clause instead of the Hazard Communication Standard. Any hazardous material not listed will be interpreted to mean that a label is required in accordance with the Hazard Communication Standard.

MATERIAL (If None, Insert "None.")	ACT
_____	_____
_____	_____

(d) The apparently successful Offeror agrees to submit, before award, a copy of the hazard warning label for all hazardous materials not listed in paragraph (c) of this clause. The Offeror shall submit the label with the Material Safety Data Sheet being furnished under the Hazardous Material Identification and Material Safety Data clause of this contract.

(e) The Contractor shall also comply with MIL-STD-129, Marking for Shipment and Storage (including revisions adopted during the term of this contract).

(End of clause)

252.227-7022 GOVERNMENT RIGHTS (UNLIMITED) (MAR 1979)

The Government shall have unlimited rights, in all drawings, designs, specifications, notes and other works developed in the performance of this contract, including the right to use same on any other Government design or construction without additional compensation to the Contractor. The Contractor hereby grants to the Government a paid-up license throughout the world to all such works to which he may assert or establish any claim under design patent or copyright laws. The Contractor for a period of three (3) years after completion of the project agrees to furnish the original or copies of all such works on the request of the Contracting Officer.

252.227-7033 RIGHTS IN SHOP DRAWINGS (APR 1966)

(a) Shop drawings for construction means drawings, submitted to the Government by the Construction Contractor, subcontractor or any lower-tier subcontractor pursuant to a construction contract, showing in detail (i) the proposed fabrication and assembly of structural elements and (ii) the installation (i.e., form, fit, and attachment details) of materials or equipment. The Government may duplicate, use, and disclose in any manner and for any purpose shop drawings delivered under this contract.

(b) This clause, including this paragraph (b), shall be included in all subcontracts hereunder at any tier.

252.227-7023 DRAWINGS AND OTHER DATA TO BECOME PROPERTY OF GOVERNMENT. (MAR 1979)

All designs, drawings, specifications, notes and other works developed in the performance of this contract shall become the sole property of the Government and may be used on any other design or construction without additional compensation to the Contractor. The Government shall be considered the "person for whom the work was prepared" for the purpose of authorship in any copyrightable work under 17 U.S.C. 201(b). With respect thereto, the Contractor agrees not to assert or authorize others to assert any rights nor establish any claim under the design patent or copyright laws. The Contractor for a period of three (3) years after completion of the project agrees to furnish all retained works on the request of the Contracting Officer. Unless otherwise provided in this contract, the Contractor shall have the right to retain copies of all works beyond such period.

252.231-7000 SUPPLEMENTAL COST PRINCIPLES (DEC 1991)

When the allowability of costs under this contract is determined in accordance with part 31 of the Federal Acquisition Regulation (FAR), allowability shall also be determined in accordance with part 231 of the Defense FAR Supplement, in effect on the date of this contract.

252.236-7000 MODIFICATION PROPOSALS - PRICE BREAKDOWN. (DEC 1991)

(a) The Contractor shall furnish a price breakdown, itemized as required and within the time specified by the Contracting Officer, with any proposal for a contract modification.

(b) The price breakdown --

(1) Must include sufficient detail to permit an analysis of profit, and of all costs for --

(i) Material;

(ii) Labor;

(iii) Equipment;

(iv) Subcontracts; and

(v) Overhead; and

(2) Must cover all work involved in the modification, whether the work was deleted, added, or changed.

(c) The Contractor shall provide similar price breakdowns to support any amounts claimed for subcontracts.

(d) The Contractor's proposal shall include a justification for any time extension proposed.

252.243-7001 PRICING OF CONTRACT MODIFICATIONS (DEC 1991)

When costs are a factor in any price adjustment under this contract, the contract cost principles and procedures in FAR part 31 and DFARS part 231, in effect on the date of this contract, apply.

252.248-7000 PREPARATION OF VALUE ENGINEERING CHANGE PROPOSALS (MAY 1994)

Prepare value engineering change proposals, for submission pursuant to the value engineering clause of this contract, in the format prescribed by the version of MIL-STD-973 in effect on the date of contract award.

(End of clause)

TABLE OF CONTENTS

SPECIAL CLAUSES

PARAGRAPH NO.	PARAGRAPH TITLE
SC-1	COMMENCEMENT, PROSECUTION, AND COMPLETION OF WORK
SC-1.1	OPTION FOR INCREASED QUANTITY
SC-1.2	EXCEPTION TO COMPLETION PERIOD
SC-2	LIQUIDATED DAMAGES - CONSTRUCTION
SC-3	DELETED - TIME EXTENSIONS
SC-4	DELETED - VARIATIONS IN ESTIMATED QUANTITIES - SUBDIVIDED ITEMS
SC-5	INSURANCE - WORK ON A GOVERNMENT INSTALLATION
SC-6	DELETED - CONTINUING CONTRACTS
SC-7	PERFORMANCE OF WORK BY THE CONTRACTOR
SC-8	PHYSICAL DATA
SC-9	DELETED - QUANTITY SURVEYS
SC-10	LAYOUT OF WORK
SC-11	DELETED - PAYMENT FOR MOBILIZATION AND DEMOBILIZATION
SC-12	DELETED - AIRFIELD SAFETY PRECAUTIONS
SC-13	IDENTIFICATION OF GOVERNMENT-FURNISHED PROPERTY
SC-14	EQUIPMENT OWNERSHIP AND OPERATING EXPENSE SCHEDULE
SC-15	PAYMENT FOR MATERIALS DELIVERED OFF-SITE
SC-16	DELETED - ORDER OF PRECEDENCE
SC-17	DELETED - LIMITATION OF PAYMENT FOR DESIGN

SC-18 DELETED - CONTRACT DRAWINGS, MAPS AND SPECIFICATIONS

SC-19. TECHNICAL PROPOSAL - COPIES TO BE FURNISHED UPON AWARD

SC-20. COMPLIANCE CERTIFICATION

SC-21. VALUE ENGINEERING

SC-22. DELETED - EPA ENERGY STAR

SC-23 YEAR 2000 COMPLIANCE

SC-24 RECOVERED MATERIALS

SPECIAL CLAUSES

SC-1. COMMENCEMENT, PROSECUTION, AND COMPLETION OF WORK (APR 1984) (FAR 52.211-10).

The Contractor shall be required to (a) commence work under this Contract within 10 calendar days after the date the Contractor receives the notice to proceed, (b) prosecute the work diligently, and (c) complete the entire work ready for use not later than 540 calendar days after date of receipt by Contractor of notice to proceed. The time stated for completion shall include final cleanup of the premises.

SC-1.1 OPTION FOR INCREASED QUANTITY

a. The Government may increase the quantity of work awarded by exercising one or more of the Optional Items 0007 and 0008 at the time of award, or not at all. Notice to proceed on work Items added by exercise of the option(s) will be given upon execution of consent of surety.

b. The parties hereto further agree that any option herein shall be considered to have been exercised at the time the Government deposits written notification to the Contractor in the mails.

c. The time allowed for completion of any optional items awarded under this contract will be the same as that for the base items, and will be measured from the date of receipt of the notice to proceed for the base items.

SC-1.2 EXCEPTION TO COMPLETION PERIOD

In case the Contracting Officer determines that completion of seeding, sodding, and planting, and establishment of same is not feasible within the completion period(s) stated above, the Contractor shall accomplish such work in the first planting period following the contract completion period and shall complete such work as specified, unless other planting periods are directed or approved by the Contracting Officer.

SC-2. LIQUIDATED DAMAGES - CONSTRUCTION (APR 1984) (FAR 52.211-12)

(a) If the Contractor fails to complete the work within the time specified in the Contract, or any extension, the Contractor shall pay to the Government as liquidated damages, the sum of $987.00 for each day of delay.

(b) If the Government terminates the Contractor's right to proceed, the resulting damage will consist of liquidated damages until such reasonable time as may be required

for final completion of the work together with any increased costs occasioned the Government in completing the work.

(c) If the Government does not terminate the Contractor's right to proceed, the resulting damage will consist of liquidated damages until the work is completed or accepted.

(d) Exception to Liquidated Damage: In case the Contracting Officer determines that completion of work stated above in paragraph Exception to Completion Period(s) is not feasible during the completion period(s) stated in SC-1, such work will be exempted from liquidated damages.

SC-3. AND SC-4. DELETED.

SC-5. INSURANCE - WORK ON A GOVERNMENT INSTALLATION (SEP 1989) (FAR 52.228-5)

(a) The Contractor shall, at its own expense, provide and maintain during the entire performance period of this Contract at least the kinds and minimum amounts of insurance required in the Insurance Liability Schedule or elsewhere in the Contract.

(b) Before commencing work under this Contract, the Contractor shall certify to the Contracting Officer in writing that the required insurance has been obtained. The policies evidencing required insurance shall contain an endorsement to the effect that any cancellation or any material change adversely affecting the Government's interest shall not be effective:

(1) for such period as the laws of the State in which this Contract is to be performed prescribe; or

(2) until 30 days after the insurer or the Contractor gives written notice to the Contracting Officer, whichever period is longer.

(c) The Contractor shall insert the substance of this clause, including this paragraph (c), in subcontracts under this Contract that require work on a Government installation and shall require subcontractors to provide and maintain the insurance required in the Schedule or elsewhere in the Contract. The Contractor shall maintain a copy of all subcontractors' proofs of required insurance, and shall make copies available to the Contracting Officer upon request.

(d) Insurance Liability Schedule (FAR 28.307-2)

(1) Workers' compensation and employer's liability. Contractors are required to comply with applicable Federal and State workers' compensation and occupational disease statutes. If occupational diseases are not compensable under those statutes,

they shall be covered under the employer's liability section of the insurance policy, except when Contract operations are so commingled with a Contractor's commercial operation that it would not be practical to require this coverage. Employer's liability coverage of at least $100,000 shall be required, except in states with exclusive or monopolistic funds that do not permit workers' compensation to be written by private carriers.

(2) General Liability.

(a) The Contracting Officer shall require bodily injury liability insurance coverage written on the comprehensive form of policy of at least $500,000 per occurrence.

(b) Property damage liability insurance shall be required only in special circumstances as determined by the agency.

(3) Automobile liability. The Contracting Officer shall require automobile liability insurance written on the comprehensive form of policy. The policy shall provide for bodily injury and property damage liability covering the operation of all automobiles used in connection with performing the Contract. Policies covering automobiles operated in the United States shall provide coverage of at least $200,000 per person and $500,000 per occurrence for bodily injury and $20,000 per occurrence for property damage. The amount of liability coverage on other policies shall be commensurate with any legal requirements of the locality and sufficient to meet normal and customary claims.

(4) Aircraft public and passenger liability. When aircraft are used in connection with performing the Contract, the Contracting Officer shall require aircraft public and passenger liability insurance. Coverage shall be at least $200,000 per person and $500,000 per occurrence for bodily injury, other than passenger liability, and $200,000 per occurrence for property damage. Coverage for passenger liability bodily injury shall be at least $200,000 multiplied by the number of seats or passengers, whichever is greater.

(5) Vessel liability. When Contract performance involves use of vessels, the Contracting Officer shall require, as determined by the agency, vessel collision liability and protection and indemnity liability insurance.

(6) Environmental Liability If this contract includes the transport, treatment, storage, or disposal of hazardous material waste the following coverage is required.

The Contractor shall ensure the transporter and disposal facility have liability insurance if effect for claims arising out of the death or bodily injury and property damage from hazardous material/waste transport, treatment, storage and disposal, including vehicle liability and legal defense costs in the amount of $1,000,000.00 as evidenced by a certificate of insurance for General, Automobile, and Environmental Liability Coverage. Proof of this insurance shall be provided to the Contracting Officer.

SC-6. – DELETED.

SC-7. PERFORMANCE OF WORK BY THE CONTRACTOR (APR 1984) (FAR 52.236-1): The Contractor shall perform on the site, and with its own organization, work equivalent to at least fifteen percent (15%) of the total amount of work to be performed under the Contract. The percentage may be reduced by a supplemental agreement to this Contract if, during performing the work, the Contractor requests a reduction and the Contracting Officer determines that the reduction would be to the advantage of the Government.

SC-8. PHYSICAL DATA (APR 1984) (FAR 52.236-4): Data and information furnished or referred to below is for the Contractor's information. The Government will not be responsible for any interpretation of or conclusion drawn from the data or information by the Contractor.

(a) Physical Conditions: The indications of physical conditions on the drawings and in the specifications are the result of site investigations by test holes shown on the drawings.

(b) Weather Conditions: Each bidder shall be satisfied before submitting his bid as to the hazards likely to arise from weather conditions. Complete weather records and reports may be obtained from any National Weather Service Office.

(c) Transportation Facilities: Each bidder, before submitting his bid, shall make an investigation of the conditions of existing public and private roads and of clearances, restrictions, bridge load limits, and other limitations affecting transportation and ingress and egress at the jobsite. The unavailability of transportation facilities or limitations thereon shall not become a basis for claims for damages or extension of time for completion of the work.

SC-9. DELETED.

SC-10. LAYOUT OF WORK (APR 1984) (FAR 52.236-17): The Contractor shall lay out its work from Government-established base lines and bench marks indicated on the drawings, and shall be responsible for all measurements in connection with the layout. The Contractor shall furnish, at its own expense, all stakes, templates, platforms, equipment, tools, materials, and labor required to lay out any part of the work. The Contractor shall be responsible for executing the work to the lines and grades that may be established or indicated by the Contracting Officer. The Contractor shall also be responsible for maintaining and preserving all stakes and other marks established by the Contracting Officer until authorized to remove them. If such marks are destroyed by the Contractor or through its negligence before their removal is authorized, the Contracting Officer may replace them and deduct the expense of the replacement from any amounts due, or to become due, to the Contractor.

SC-11. THROUGH SC-13. DELETED.

SC-14. EQUIPMENT OWNERSHIP AND OPERATING EXPENSE SCHEDULE (MAR 1995)-(EFARS 52.231-5000)

(a) This clause does not apply to terminations. See 52.249-5000, Basis for Settlement of Proposals and FAR Part 49.

(b) Allowable cost for construction and marine plant and equipment in sound workable condition owned or controlled and furnished by a contractor or subcontractor at any tier shall be based on actual cost data for each piece of equipment or groups of similar serial and series for which the Government can determine both ownership and operating costs from the contractor's accounting records. When both ownership and operating costs cannot be determined for any piece of equipment or groups of similar serial or series equipment from the contractor's accounting records, costs for that equipment shall be based upon the applicable provisions of EP 1110-1-8, Construction Equipment Ownership and Operating Expense Schedule, Region IV. Working conditions shall be considered to be average for determining equipment rates using the schedule unless specified otherwise by the contracting officer. For equipment not included in the schedule, rates for comparable pieces of equipment may be used or a rate may be developed using the formula provided in the schedule. For forward pricing, the schedule in effect at the time of negotiations shall apply. For retroactive pricing, the schedule in effect at the time the work was performed shall apply.

(c) Equipment rental costs are allowable, subject to the provisions of FAR 31.105(d)(ii) and FAR 31.205-36. Rates for equipment rented from an organization under common control, lease-purchase arrangements, and sale-leaseback arrangements, will be determined using the schedule, except that actual rates will be used for equipment leased from an organization under common control that has an established practice of leasing the same or similar equipment to unaffiliated lessees.

(d) When actual equipment costs are proposed and the total amount of the pricing action exceeds the small purchase threshold, the contracting officer shall request the contractor to submit either certified cost or pricing data, or partial/limited data, as appropriate. The data shall be submitted on Standard Form 1411, Contract Pricing Proposal Cover Sheet.

(e) Copies of EP1110-1-8 “Construction Equipment Ownership and Operating Expense Schedule” Volume 4 (Montana) and Volume 8 (Washington, Oregon and Idaho) are available from the Superintendent of Documents, P.O. Box 371954, Pittsburg, PA 15250-7954, phone (202) 512-1800 and fax (202) 512-2250, OR from the Government Bookstore in the Jackson Federal Building, Seattle, WA, phone (206) 553-4279. The cost is $33.00 for each volume. Use the following stock numbers when ordering schedules:

S/N 008-022-00317-7	Volume 4
S/N 008-022-00321-5	Volume 8

SC-15. PAYMENT FOR MATERIALS DELIVERED OFF-SITE (MAR 1995)-(EFARS 52.232-5000)

(a) Pursuant to FAR clause 52.232-5, Payments Under Fixed Priced Construction Contracts, materials delivered to the contractor at locations other than the site of the work may be taken into consideration in making payments if included in payment estimates and if all the conditions of the General Provisions are fulfilled. Payment for items delivered to locations other than the work site will be limited to: (1) materials required by the technical provisions; or (2) materials that have been fabricated to the point where they are identifiable to an item of work required under this contract.

(b) Such payment will be made only after receipt of paid or receipted invoices or invoices with canceled check showing title to the items in the prime contractor and including the value of material and labor incorporated into the item. In addition to petroleum products, payment for materials delivered off-site is limited to the following items: Any other construction material stored offsite may be considered in determining the amount of a progress payment.

SC-16. ORDER OF PRECEDENCE - DESIGN/BUILD CONTRACT

(a) The contract includes the standard contract clauses and schedules current at the time of contract award. It entails (1) the solicitation in its entirety, including all drawings, cuts, and illustrations and any amendments, and (2) the successful offeror's accepted proposal. The contract constitutes and defines the entire agreement between the Contractor and the Government. No documentation shall be omitted which in any way bears upon the terms of that agreement.

(b) In the event of conflict or inconsistency between any of the provisions of this contract, including the Request for Proposal, Contractor's proposal, or contract deliverable, precedence shall be given in the following order:

(1) Betterments: Any portions of the accepted proposal, or any subsequent design or other submittal, which both conform to and exceed the provisions of the Request for Proposal. "Betterment" is defined as any product, component, or system, which exceeds the minimum requirements stated in the Request for Proposal.

(2) The provisions of the solicitation, including drawings and attachments.

(3) All other provisions of the accepted proposal including RFP Standard Form SF 1442 and Schedule.

(4) Any design products including, but not limited to, plans, specifications, engineering studies and analyses, shop drawings, equipment installation drawings, etc. These are “deliverables” under the contract and must conform to or exceed all provisions of the contract, in order of precedence herein.

SC-17. LIMITATION OF PAYMENT FOR DESIGN: If it should be necessary to terminate this contract, for any reason, prior to completion, the Government will pay the Contractor a fair and reasonable price for the design or construction services performed and delivered to the Government. However, such payment will not exceed a sum greater than the amount allowable under 10 USC 4540 regardless of the actual costs the Contractor may be able to substantiate.

SC-18. DELETED

SC-19. TECHNICAL PROPOSAL - COPIES TO BE FURNISHED UPON AWARD

THE SELECTED FIRM IS REQUIRED TO FURNISH ~~THE FOLLOWING~~ 3 (THREE) COMPLETE ADDITIONAL COPIES OF THE TECHNICAL PROPOSAL, INCLUDING ANY REVISIONS THERETO AND BEST AND FINAL OFFERS (BAFOs), IF APPLICABLE, WITHIN 5 WORKING DAYS OF AWARD~~:~~.

~~• Volume 1 (3 SETS)~~
~~• Volume 2 (3 SETS)~~
~~• Volume 3 (1 SET)~~

~~Volume 1 shall consist of:~~
~~• Technical Proposal Letter~~
~~• Table of Contents. List all sections of the technical proposal.~~
~~• Outline Specifications~~
~~• Supporting Data~~
~~• Schedule~~

~~Volume 2 shall consist of: Drawings~~

~~Volume 3 shall consist of: Color Boards~~

SC-20. COMPLIANCE CERTIFICATION

The offeror shall certify, in the technical proposal cover letter and by note on each sheet of working drawings, that all items submitted in proposal and final design documents comply with RFP requirements. The requirements specified in the RFP are binding contract requirements. In case of any conflicts after the contract award between the requirements stated in the RFP and the offeror's proposal, the RFP requirements shall govern.

SC-21. VALUE ENGINEERING: The Corps of Engineers encourages all offeror's to utilize the Value Engineering methodology and functional analysis techniques. These techniques will most often result in a quality and cost effective product.

SC-22. DELETED

SC-23. YEAR 2000 COMPLIANCE:

a. In accordance with FAR 39.106, the Contractor shall ensure that with respect to any design, construction, goods, or services under this contract as well as any subsequent task/delivery orders issued under this contract (if applicable), all information technology contained therein shall be Year 2000 compliant. Specifically:

b. The Contractor shall:

(1) Perform, maintain, and provide an inventory of all major components to include structures, equipment, items, parts, and furnishings under this contract and each task/delivery order which may be affected by the Year 2000 compliance requirement.

(2) Indicate whether each component is currently Year 2000 compliant or requires an upgrade for compliance prior to Government acceptance.

SC-24. RECOVERED MATERIALS: The Corps of Engineers encourages all bidders to utilize recovered materials to the maximum extent practicable. The attached APPENDIX R contains procurement guidelines for products containing recovered materials.

APPENDIX R

PART 247 - COMPREHENSIVE PROCUREMENT GUIDELINE FOR PRODUCTS CONTAINING RECOVERED MATERIALS

40 CFR Ch. 1 (9-1-99 Edition)

Subpart B-Item Designations

§ 247.10 Paper and paper products.

Paper and paper products, excluding building and construction paper grades.

§ 247.11 Vehicular products.

(a) Lubricating oils containing re-refined oil, including engine lubricating oils, hydraulic fluids, and gear oils, excluding marine and aviation oils.
(b) Tires. excluding airplane tire
(e) Reclaimed engine coolants, excluding coolants used in non-vehicular applications.

§ 247.12 Construction products.

(a) Building insulation product including the following items:
(1) Loose-fill insulation, including but not limited to cellulose fiber, mineral fibers (fiberglass and rock vermiculite, and perlite;
(2) Blanket and batt insulation, including but not limited to mineral fibers (fiberglass and rock wool);
(3) Board (sheathing, roof decking wall panel) insulation, including but not limited to structural fiberboard and laminated paperboard products perlite composite board, polyurethane, polyisocyanurate, polystyrene, phenolics, and composites; and
(4) Spray-in-place insulation, including but not limited to foam-in-place polyurethane and polyisocyanurate and spray-on cellulose.
(b) Structural fiberboard and laminated paperboard products for applications other than building insulation, including building board, sheathing shingle backer, sound deadening board, roof insulating board, insulating wallboard, acoustical and non-acoustical ceiling tile, acoustical and non-acoustical lay-in panels, floor underlayments, and roof overlay (coverboard).
(c) Cement and concrete, including concrete products such as pipe and block, containing coal fly as ground granulated blast furnace (GGBF) slag.
(d) Carpet made of polyester fiber use in low- and medium-wear applications.
(e) Floor tiles and patio blocks containing recovered rubber or plastic.
(f) Shower and restroom dividers/partitions containing recovered plastic or steel.
(g) (1) Consolidated latex paint used for covering graffiti; and

(2) Reprocessed latex paint used for interior and exterior architectural applications such as wallboard, ceilings, and trim; gutter boards; and concrete, stucco, masonry, wood and metal surfaces.

§247.13 Transportation products.

(a) Traffic barricades and traffic cones used in controlling or restricting vehicular traffic.
(b) Parking stops made from concrete or containing recovered plastic or rubber.
(c) Channelizers containing recovered plastic or rubber.
(d) Delineators containing recovered plastic, rubber, or steel.
(e) Flexible delineators containing recovered plastic.

§ 247.14 Park and recreation products

(a) Playground surfaces and running tracks containing recovered rubber or plastic.
(b) Plastic fencing containing recovered plastic for use in controlling snow or sand drifting and as a warning/safety barrier in construction or other applications.

§ 247.15 Landscaping products.

(a) Hydraulic mulch products containing recovered paper or recovered wood used for hydroseeding and as an over-spray for straw mulch in landscaping, erosion control, and soil reclamation.
(b) Compost made from yard trimmings, leaves, and/or grass clippings for use in landscaping, seeding of grass or other plants on roadsides and embankments, as a nutritious mulch under trees and shrubs, and in erosion control and soil reclamation.
(c) Garden and soaker hoses containing recovered plastic or rubber.
(d) Lawn and garden edging containing recovered plastic or rubber.

§ 247.16 Non-paper office product.

(a) Office recycling containers and office waste receptacles.
(b) Plastic desktop accessories.
(c) Toner cartridges.
(d) Binders.
(e) Plastic trash bags.
(f) Printer ribbons.
(g) Plastic envelopes.

§ 247.17 Miscellaneous products.

Pallets containing recovered wood, plastic, or paperboard.

STANDARD DETAILS BOUND IN THE SPECIFICATIONS

DRAWING NUMBER	SHEET NUMBER	TITLE	DATE
SECTION 01501 - CONSTRUCTION FACILITIES AND TEMPORARY CONTROLS			
	1 & 2	U.S. Air Force Project Construction Sign	84JUN20
	1	Hard Hat Sign	10SEP90

END OF SECTION

This page intentionally blank

SECTION 00810

DESIGN-BUILD CONTRACT PROCEDURES
(FY 00 Dormitory, PN: NZAS 93-90101C)

TABLE OF CONTENTS

PARAGRAPH PAGE 00810

1. General Contract Procedures..... 1
1.2 Predesign Conference 1
1.3 Phase I - Requirements 1
1.4 Phase II - Requirements 5

2. Preparation of Phase I Project Design Documents..... 6
2.1 General 6
2.2 Architect of Record 6
2.3 Construction Drawings..... 6
2.4 Specifications..... 8
2.5 Design Analysis..... 9
2.6 Additional Requirements 9

3. Phase I Design Submittal Material Requirements..... 10
3.1 General 10
3.2 Site Foundation and Utilities Design (95%) and All Other Work Including Building Design (65%) Submittals..... 10
3.3 (95%) All Other Work Including Building Design Submittals..... 11
3.5 Revised Submittals..... 11

This page intentionally blank

SECTION 00810

DESIGN-BUILD CONTRACT PROCEDURES

1. GENERAL CONTRACT PROCEDURES The contract will be conducted in two phases: Phase I is the preparation and review of project design documents. Phase II consists of construction of the facility designed in Phase I. In order to assist the Contractor in completing the contract within the agreed upon contract completion time, Phase I and Phase II will each consist of two parts. The first part will be the Site Foundation and Site Utilities, and the second part will be All Other Work. Construction is not to commence until the Government has reviewed and approved the applicable design documents for that part of the construction. The Government reviews the Contractor's design documents for compliance with the contract. The Contractor is totally and solely responsible for the design, coordination, compatibility, and completeness of each and every phase and compliance with contract requirements. Prior to start of each phase there will be a meeting to discuss Contractor's Quality Control Plan. See the Technical Specifications, Division 1, Section 01451 - Contractor Quality Control, for details.

1.2 PREDESIGN CONFERENCE Within five working days after notice to proceed with the contract a predesign conference will be held to acquaint the Contractor with the general plan of contract administration and requirements under which the design is to proceed.

1.3 PHASE I - REQUIREMENTS

1.3.1 Design Submittals. The Contractor shall prepare and distribute project design documents in accordance with the schedules provided herein. Each submittal shall be in accordance with the requirements of the contract documents and all other terms and conditions of the contract.

1.3.2 Design Reviews.

(1) The Government intends to use no more than 21 calendar days for review of submittals. Design submissions found to be incomplete or not in compliance with the contract will be returned to the Contractor for correction and re-submission. Under such circumstances the Government will have an additional 14 calendar day review period, to commence upon receipt of the revised submittals, and there will be no increase in the contract completion date provided. Contract completion time (see contract clause entitled "Commencement, Prosecution, and Completion of Work") includes time for Government review of Contractor prepared project design documents.

DESIGN SUBMITTAL SCHEDULE

Submittal	Suspense	Submittal Items
Site Foundation, Utilities Design (developed to 95%), and Demolition (100%). All Other Work Including Building Design (developed to 65%).	See Note 1.	Twenty-six (26) ~~Twenty-three (23)~~ copies each of One-half size drawings, specifications, and design analysis; all stamped and signed (see paragraph 2.2).
Revised Site Foundation and Utilities Design.	See Note 2.	Twelve (12) ~~Thirteen (13)~~ copies each one-half size drawings and specifications, and two copies design analysis and calculations; all signed and stamped. Annotated Government review comments (two copies).
All Other Work Including Building Design (developed to 95%).	See Note 3.	Twenty-six (26) ~~Twenty-three (23)~~ copies each One-half size drawings, specifications, and design analysis; all stamped and signed (see paragraph 2.2).
Revised All Other Work Including Building Design (include Site Foundation and Utilities Design documents with this final back check submittal).	See Note 2.	Twelve (12) copies each one-half size drawings and specifications, two copies of full size drawings and two copies design analysis and calculations; all signed and stamped. Annotated Government review comments (two copies).

NOTES: The Contractor shall complete suspense in the above schedule. Suspense is to be measured as the number of Calendar Days after Notice to Proceed (NTP) with the Contract.

1. The number of calendar days for completion shall be no more than 90 calendar days after NTP with the contract.
2. The number of calendar days for completion of the revised submittal shall include Government review time as specified in paragraph Design Reviews herein and time for the Contractor to complete required corrections and shall be no later than 14 calendar days after Contractor receipt of the Government review comments.
3. The number of calendar days for completion shall be no more than 150 calendar days after NTP with the contract.

DESIGN REVIEW ADDRESSES AND DISTRIBUTION ARE AS FOLLOWS:

Review Addresses	Site Foundation and Utilities (95%), Demolition (100%) and All Other Work (65%) Submittal	All Other Work Including Bldg. Design (95%) Submittal	All Other Work Including Bldg. Design Revised Submittals
Commander U.S. Army Corps of Engineers Seattle District ATTN: CENPS-EN-DB-SP (NISARGAND) P.O. Box 3755 Seattle, WA 98124-2255	4 sets of all submittal items.	4 sets of all submittal items.	2 sets 1/2 size drawings and 2 sets specs; 1 set annotated comments.
Commander U.S. Army Corps of Engineers Seattle District ATTN: CENWS-PM-MB (SAEPOFF) P.O. Box 3755 Seattle, WA 98124-2255	1 set 1/2 size drawings and 1 set specs.	1 set 1/2 size drawings and 1 set specs.	1 set 1/2 size drawings and 1 set specs. 1 set annotated comments.
U.S. Army Corps of Engineers ATTN: Alan Korslien Malmstrom AFB Project Office P.O. Box 6570 Great Falls, MT 59406-6570	2 sets 1/2 size drawings, 2 sets specs.	2 sets 1/2 size drawings, 2 sets specs and 1 color board.	2 sets full size and 2 sets 1/2 size drawings; 2 ~~3~~ sets specs; 1 set annotated comments.
U.S. Army Corps of Engineers Fairchild AFB Resident Office ATTN.: Dean Schmidt P.O. BOX 1929 Airway Heights, WA 99001- 1929	2 set of ½ size drawings, 2 set of specs	2 set of ½ size drawings, 2 set of specs	2 set of ½ size drawings, 2 set of specs. 1 set of annotated comments
Commander 341 CES/CECR ATTN.: Jack Gamble 39 – 78TH Street North Malmstrom AFB, MT 59402-7536	14 sets of all submittal items	14 sets of all submittal items	3 sets ½ size drawings, 3 sets of specs, 1 set of annotated comments

DESIGN REVIEW ADDRESSES AND DISTRIBUTION ARE AS FOLLOWS:

HQ AFSPC/CEC ATTN.: Cpt. Marie Kokotajlo 150 Vandenberg Str, Ste1105 Peterson AFB, CO 80914-4150	~~2~~ 3 sets 1/2 size drawings, ~~2~~ 3 sets specs.	~~2~~ 3 sets 1/2 size drawings, ~~2~~ 3 sets specs.	~~2~~ 3 sets 1/2 size drawings, ~~2~~ 3 sets specs., 1 set of annotated comments.
~~HQ 38MSS/EGM MCP Coordinator 4012 Hilltop Rd, Ste10 Tinker AFB, OK 73145-2713~~	~~1 set 1/2 size drawings, 1 sets specs.~~	~~1 set 1/2 size drawings, 1 sets specs.~~	

(2) Government review does not constitute approval nor acceptance of any variations from the RFP or from the Contractor's proposal unless such variations have been specifically pointed out by the Contractor in writing and authorized in writing by the Government. The responsibility for a total design in accordance with the contract will remain with the Contractor and any interim NOTICE TO PROCEED with construction will in no way mitigate against that responsibility.

(3) The Contractor is required to respond to all review comments and submit the annotated comments in the subsequent revised design submittal. All comments must either be accepted and incorporated into the design or rebutted to the Government's written satisfaction.

1.3.3 Design Review Conferences. Approximately 2 weeks after submission of design material for Government review a design review conference may be convened by the Government and held between the Government and the Contractor to discuss the submission and the Government's review comments.

1.3.4 Project Design Documents. After the Contractor's revised final submittal of the design documents has been back checked and accepted by the Government, 4 sets of corrected signed and sealed contract drawings in electronic file format, along with one complete set of ½ size prints taken from the disk, and 4 sets of corrected specifications in electronic file format shall be submitted to the Commander, U.S. Army Corps of Engineers, Seattle District, Attn.: CENWS-EC-DB-SP (Nisargand), P.O. BOX 3755, Seattle, Washington 98124-2255. The documents shall be submitted on ISO 9660 format CD-ROM. The Contractor shall also provide the following to the Government:

(a) Nine (9) copies each one-half size drawings
(b) Nine (9) copies specifications.

Distribution of these design documents shall be as directed by the Government at the design review conference.

1.4 PHASE II - REQUIREMENTS After the Contractor has completed the applicable project design documents (see Phase 1 - Requirements above) the Government will issue to the Contractor a notice to proceed with construction.

1.4.1 Pre-construction Conference. Prior to commencement of construction a Pre-construction Conference will be held to acquaint the Contractor with the general plan of contract administration and requirements under which the construction operation is to proceed. This conference will also inform the Contractor of the obligations concerning equal opportunity and Federal wage rates reporting system.

1.4.2 Contract Closeout. Completion, acceptance, and contract settlement are accomplished when final punch list items (see Section 00700 - Contract Clause

Inspection of Construction) have been completed and approved, "as-built" drawings are complete, and warranty provisions and dates are established.

2. PREPARATION OF PHASE I - PROJECT DESIGN DOCUMENTS

2.1 GENERAL The Phase I project design documents shall include construction drawings, specifications, and design analysis for categories such as, but not limited to, demolition, architectural, fire protection/life safety, civil, structural, mechanical, electrical, grading, drainage, paving, telecommunications, and utility service. Provide specifications in sufficient detail to fully describe and demonstrate the quality of materials, the installation, and performance of equipment, and the quality of workmanship. Detailing and installation of all equipment and materials shall comply with the manufacturer's recommendations and base standards. Provide a design analysis for each discipline of work with sufficient backup data including the necessary calculations, tables, methods, and sources used in determining equipment and material sizes and capacities. Design development shall conform to the criteria and requirements of Section 00860 - Statement of Work.

2.2 ARCHITECT OF RECORD All construction drawings and design calculations of the Contractor and any changes to these documents shall be affixed with the registration stamp (seal) of the Architect of Record (see Section 01451 Contractor Quality Control, paragraph 3.4 Quality Control Organization) and that of all consultants, as appropriate, (i.e. structural, civil, mechanical, electrical, and fire protection engineers) before submittal for review. All design professionals shall have current registration to practice in the United States. Approval shall be indicated on all documents by having the professional stamp/seal of architect or engineer with personal signature over same appearing on all sheets as applicable to their specialties.

2.3 CONSTRUCTION DRAWINGS AutoCAD shall be utilized by the Contractor in preparing construction drawings. The AutoCAD version, electronic file format and layering shall be as specified in Section 01702, As Built Record Drawings. The project title is: FY00 144 person Dormitory, Malmstrom AFB, MONTANA, Project Number: NZAS 93-90101C. The project drawing file number is 225s/721-11-16, and individual drawing plates are to be identified as follows:

Title/Location/Index:	G-1		
Demolition:	D-1 and Following	Structural:	S-1 and Following
Civil:	C-1 and Following	Mechanical:	M-1 and Following
Architectural:	A-1 and Following	Electrical:	E-1 and Following

****

NOTE: This is a metric project and all project design documents are to be prepared in metric units. The following publications are recommended as guides to aid the Contractor in the preparation of the project design documents:

METRIC GUIDE FOR FEDERAL CONSTRUCTION

Published by - National Institute of Building Sciences
1201 L Street N.W.
Washington, D.C. 20005 (202) 289-7800

MASTERMETRIC - A Guide for Using the International System of Units (SI) in Construction Documents

Published by - AIA Master Systems - MASTERSPEC Specifications
332 East 500 South Street
Salt Lake City, Utah 84111-3309 (800) 424-5080

****

Construction drawings shall include all details necessary to portray the design requirements. All construction drawings shall be signed by the responsible registered professional engineer or architect. The following minimum drawings shall be submitted:

a. Site plan(s) which accurately show existing and finish grade contours and drainage, location of pavements, layout of major utility lines, features to be retained or removed, location of all buildings, and project boundaries.

b. Typical site paving including pavement and soil cross sections and site utilities including locations of valves, hydrants, etc.

c. Architectural floor plans which show overall dimensions, room dimensions and areas, equipment and fixtures and door swings. (1:50 scale shall be used for plans of toilets and elevations and sections as necessary for clarity).

d. Foundation plans showing sections and details.

e. Structural plans including framing plans, sections and details.

f. Exterior elevations which show all elevations and identify exterior materials.

g. Typical sections (1:50 scale or larger) for each type of foundation, floor, wall, and roof construction. Include exterior walls, interior bearing walls/floors, partitions, and all other typical conditions.

h. Interior elevations which show floor, ceiling, wall materials and type of fixtures for rest rooms.

i. Interior finish schedule which shows materials and colors for wall, ceiling, and floor finishes for each room. Indicate ceiling heights.

j. Door schedule which shows type, size, material, fire rating, hardware group, and frame information.

k. Fixture and Equipment Plans (1:50 scale) showing compatibility of equipment and fixture placement.

l. Mechanical drawings shall include, in addition to layout drawings for all systems, single line diagrams of each type of piping system. Type and capacity of all mechanical equipment shall be clearly indicated including necessary schedules listing operating data.

m. Electrical, Interior: The drawings shall include all power and lighting circuits. Panels and circuits for the various pieces of equipment and lighting systems shall be properly identified and separate plans provided for power, lighting and auxiliaries. Include riser (one line) diagrams for power for auxiliaries and schedules for panels, lighting, etc. Auxiliaries to include telephone, fire alarm, public address system etc.

n. Electrical, Exterior: The drawings shall include all exterior distribution transformers, primary electrical service, underground electrical ducts, manholes and details of all new construction.

o. Equipment schedules and installation details (1:20 scale or larger) for each special detail.

2.4 SPECIFICATIONS For the preparation of construction specifications the Contractor shall utilize the guidance provided in Section 00860 - Statement of Work and the fully developed Specifications Division 2 through 16 attached in Appendix A. These specifications were prepared in accordance with the RFP requirements and reflect materials, equipment, and workmanship required for this project. In case of discrepancy between specifications and the RFP requirements, the RFP governs. In several instances it was not possible to prepare full specification when design has not been completed. The unedited or partially edited COE guide specs are provided for such cases. In most specifications the referenced publications have not been updated. The Contractor shall revise the specifications to incorporate the most current applicable publications (codes, ASTM's, etc.). It remains the Contractor's responsibility to edit and revise all specifications (except Division 1) as necessary to match his specific design and provide complete and usable design documents.

The Contractor is to provide specifications covering all work for Divisions 2 through 16. All specifications shall be prepared and submitted in CSI three-part format. The specifications shall require furnishing additional information such as shop or working drawings, manufacturer’s literature, certificates of compliance, material samples, and guarantees necessary to assure that the work can be completed and conforms with the criteria contained in the contract and that supervision and inspection of the project can be

maintained. The Division 1 Specifications attached in Appendix A have been prepared by the Government and shall not be revised by the Contractor except for the following input:

a) Section 01330 Submittal Procedures. Complete the submittal register ENG Form 4288. See specification Section 01330 for guidance and sample blank form. The submittal register shall be prepared in Microsoft Excel, and both hard copy and electronic file shall be furnished with the contract documents.

b) Section 01451 Contractor Quality Control. Review and edit, if necessary, Table 1 - Minimum Sampling and Testing Frequency to assure that the materials and minimum sampling and testing frequency shown are applicable for the work being done.

2.5 DESIGN ANALYSIS Design analysis includes complete design narrative and backup calculations to support each discipline of work. The Contractor shall utilize the guidance provided in Section 00860 - Statement of Work, and the following. These analyses should include, but not be limited to, civil, structural, electrical and mechanical systems. Include computations for sizing equipment, air duct design, ventilation design, and thermal resistance factors for ceilings, roofs, and exterior walls and floors. Provide zonal cavity lighting calculations for all interior lighting and point lighting calculations for all exterior lightning. Provide short circuit, load flow, and any necessary coordination studies. Provide vendor cut sheets of major items, or items which are not commonly available. Design analyses shall be presented in a clear and legible form incorporating a title page, and a table of contents. Sources of information, formula, and references shall be explained. Assumptions and conclusions shall be explained and cross-referencing is to be clear. Design analyses shall be accomplished by Registered Professional Engineers or Architects qualified in the respective design field (see paragraph 2.2 Architect of Record).

a) When a computer program is used, the program shall be named and described. This description must be sufficient to verify the validity of methods, assumptions, theories, and formulas.

b) Spread sheet style programs are acceptable for structural analysis and design. Under a repetitive condition, at least one manual computation must be performed for each unique condition. All data, formulas and any referenced items should be clearly shown before initiation of the program. Any computer models generated for use with modeling programs should be accompanied by drawings indicating coordinate system, joint numbering and element/member numbering scheme.

2.6 ADDITIONAL REQUIREMENTS

a. Equipment and Fixtures. The Contractor shall furnish equipment and fixture schedules, catalog data, applicable Government or Commercial Specification numbers, and indicate sizes, capacities, manufacturer, model numbers, and manufacturer's

warranties for all equipment and fixtures. Originals of catalog data (six copies only) shall be submitted in lieu of reproducibles or copies to ensure legible data.

b. Additional topographic surveys and soils information obtained by the Contractor shall be submitted for review with the other design data. Topographic survey shall include contour lines of sufficient frequency for development of construction plans. Horizontal and vertical control shall be shown. Soil investigations shall include any boring logs, testing results, or design analysis performed.

c. Field Trip Report: The electrical engineer and mechanical engineer responsible for the design are required to visit the site and furnish a trip report with the 95% design submittal. During the site visit the responsible electrical engineer and mechanical engineer shall coordinate with the Contracting Officer to obtain the following data from the appropriate base personnel: power system characteristics, communications support items, fire alarm system requirements, EMCS requirements, cathodic protection, and any other items necessary for the design of supporting services to the facility. The report shall include names and titles of persons contacted and a brief description of all guidance information or instructions received.

d. Color Board. A color board shall be submitted as part of the 95% Bldg. Design submittal (see paragraph Design Submittals). Heavy or bulky samples and materials may be presented by clear color photographs, which indicate actual colors and textures. Where special finishes such as metal roof panels are required, samples not less than 12 inches square shall be submitted with the board.

e. Architectural Rendering. The Contractor shall provide a professionally produced and framed color rendering of the project. The size and orientation (vertical or horizontal should be as required to best illustrate the design solution with the overall framed size not exceeding 30 by 36 inches. The rendering shall be mounted in a flat black metal frame, 1 inch deep (wall to face) with a 1/4 to 3/16 inch face width. Install adjustable devices and picture wire for hanging. Matting shall be #789, Granite mat board by Bainbridge or a matching color by another manufacturer. If double matted the interior mat should be black with a 1/4 to 3/16 inch reveal. Glazing shall be sheet plastic at least 1/8 inch thick. The name of the project, the design firm, and the HQ AFSPC project manager's name (to be provided by the CO) are to be engraved or otherwise professionally applied to a small, black, metal or plastic plate adhered to the exterior of the glazing near the bottom center of the framed rendering. The rendering medium shall be gauche, water color or acrylic.

Rendering view shall be submitted, in the form of a single line sketch along with proposed engraving layout, for CO review and comments prior to starting work in the rendering medium. Final submittal is due with the 95% all other work including building design submittal.

3. PHASE I DESIGN SUBMITTAL MATERIAL REQUIREMENTS

3.1 GENERAL. Design reviews will be conducted by the Government for:

a. 95% Site Foundation and Utilities Design, 100% Demolition and 65% All Other Work Including Building Design; and

b. 95% All Other Work Including Building Design.

Design submittal schedule and distribution requirements are given in paragraph 1.3 PHASE I - REQUIREMENTS. Requirements for preparation of submittal materials are found in paragraph 2. PREPARATION OF PHASE I PROJECT DESIGN DOCUMENTS. Submittal materials required for these design reviews are as follows.

3.2 SITE FOUNDATION AND UTILITIES DESIGN (95%), DEMOLITION (100%) and ALL OTHER WORK INCLUDING BUILDING DESIGN (65%) SUBMITTALS

a. Construction Drawings:

1. Submittal shall include all drawings necessary to fully depict Site Foundation and Utilities Design construction requirements developed to 95%.

2. Submittal shall include all drawings necessary to fully depict All Other Work Including Building Design developed to 65% completion.

b. Specifications:

1. Submittal shall include completed specifications for site foundation and utilities design developed to 95%.

2. Outline specifications for all other work, including an index, general conditions and all technical sections.

c. Design Analysis and Supporting Data:

1. Design analysis with supporting calculation and other data as appropriate to support the 95% site foundation and utilities design.

2. Design analysis developed to the extent required to support the other design work included in this submittal.

3. Equipment and Fixture Schedules to support the design work included in this submittal.

d. Demolition:

Demolition plan and specification, including plan for compliance with all applicable Federal, State, local and base regulations for demolition material handling, hauling and disposal, developed to 100%.

3.3 (95%) ALL OTHER WORK INCLUDING BUILDING DESIGN SUBMITTALS

a. Construction Drawings: All drawings upgraded to 95 % completion. Incorporate site foundation and utilities drawings into drawing package for this submittal.

b. Specifications: All completed specifications upgraded to 95% to support the completed work. The marked-up FY99 Dormitory specifications shall be submitted, showing all revisions.

c. Design Analysis and Supporting Data:

1. Design analysis with supporting calculations and other data as appropriate to support the completed work.
2. Equipment and Fixture Schedules, catalog data and manufacturer's warranties for all equipment and fixtures.

d. Color Board showing colors, materials, textures, finishes, etc. (in accordance with paragraph 2.6 d. Color Boards).

e. Architectural Rendering final submittal (in accordance with paragraph 2.6 e. Architectural Rendering).

3.4 REVISED SUBMITTALS Submit annotated Government review comments from previous submittal. All comments shall be incorporated into the design or rebutted to the satisfaction of the CO.

END OF SECTION

SECTION 00860

STATEMENT OF WORK

TABLE OF CONTENTS

PARAGRAPH NUMBER	PARAGRAPH TITLE
	SECTION 00860 PART I
1.	PROJECT SCOPE OF WORK
1.1	General
1.2	Project Location and Site Plan
2.	CODES AND STANDARDS
2.1	General
2.2	Basic Requirements
	SECTION 00860 PART II
3.	DESIGN DEVELOPMENT TECHNICAL REQUIREMENTS
3.1	Civil Design Requirements
3.2	Architectural Requirements
3.3	Structural Requirements
3.4	Mechanical Requirements
3.5	Electrical Requirements
3.6	Fire Detection and Protection Requirements
	ATTACHMENT – FIGURES AND DETAILS
Figure 1	Malmstrom Air Force Vicinity and Base Maps
Figure 2	FY00 Dormitory Site Plan
Figure 3	FY00 Dormitory Site Layout
Detail D1	Vinyl Fence Detail
Detail D2	Bollard Detail
Detail D3	Typical PCC Curb and Gutter Details
Detail D4	Fire Hydrant Color Code Detail

This page intentionally blank

This page intentionally blank

SECTION 00860

STATEMENT OF WORK
PART I

1. PROJECT SCOPE OF WORK

1.1 GENERAL

This project includes all design and construction necessary to provide a complete and usable 144 person dormitory of approximately 5040 square meters at Malmstrom AFB, Montana, as described herein. Site development includes utility services, paved access roads and parking areas, landscaping and all other site improvements as described herein. The dormitory will be a three story steel frame structure. The exterior shall be consistent with Base architectural scheme. It will feature split-faced concrete masonry unit (CMU) veneer walls and exterior insulated finish system (EIFS) with a non-combustible structural steel frame, and a standing seam metal roof (see paragraph 3.2.2 Architectural Design, (1) Exterior Design). The work includes all utility systems, HVAC, IMCS, and EMCS systems, a complete fire protection system, fire detection and reporting system, and the storage, assembly and installation of Government furnished furniture, fixtures and equipment as itemized in paragraph 3.2.1. Sitework includes asphaltic concrete paving, portland cement concrete sidewalks, concrete curbs and gutters, landscaping and irrigation systems, and connection of building utilities to the base utilities systems. Determination of existing site conditions, site surveys, geotechnical investigations, and all other information prerequisite for design and construction of a complete and usable facility and not contained in this Request for Proposal (RFP) are the express responsibility of the Contractor.

NOTE: Wherever the term "Proposer" is used it shall be read as "Contractor" following contract award.

1.2 PROJECT LOCATION AND SITE PLAN

Malmstrom AFB is located just outside the city of Great Falls, Montana. Figure 1 shows Malmstrom AFB and the project location. Figure 2 shows the new dormitory site and adjacent buildings, and Figure 3 shows the 144 person FY00 Dormitory layout and site improvements in relationship to the existing site features.

2. CODES AND STANDARDS

2.1 GENERAL

2.1.1 The project shall be designed and constructed in accordance with the applicable codes, standards, design parameters and regulations as noted in this section or other sections of this RFP. In case of conflict between these requirements the most stringent requirement shall apply.

2.1.2 Reference to standard specifications of any technical society, organization, or association, or to codes, manuals, or regulations of Federal, State, or local authorities shall mean the latest standard, code, manual, regulation, specification, or tentative specification adopted and published at least 90 days prior to submittal of proposals, unless specifically stated otherwise.

2.1.3 When any code or standard listed below references the authority having "jurisdiction" or "governmental authority" this reference shall be interpreted as referring to the Contracting Officer (CO).

2.1.4 Throughout this RFP reference is made to the Malmstrom AFB Architectural Compatibility Guide. This manual presents the Base's design philosophy and provides the frame work within which this RFP was prepared. Other Malmstrom AFB documents which have to be complied with are: General Plan, Comprehensive Plan, and Base Design Standards. These documents are available in hard copy only at the Corps of Engineers, Seattle District. POC is Mr. Steven Saepoff, telephone (206-764-3547). In addition, the design and construction of the new dormitory has to comply with the following design guides and construction standard, available as noted below:

Facility Design Guide for Enlisted Dormitories -
(http://www.afcee.brooks.af.mil/dc/dcd/programsdcd.htm)
AFH32-1084 Facilities Requirements Handbook
(http:/afpubs.hq.af.mil/pubs/publist.asp?puborgAF&series=32)
AFSPC H32-1004 Facilities Excellence Program and Standards Handbook
(http:/afpubs.hq.af.mil/pubs/publist.asp?puborgAFSPC&series=32)
Note: Information in paragraphs 1. through 4. of the H32-1004 is outdated. Use information from Facility Design Guide instead.
AF ETL00-1 EPA Guideline Items in Construction and Other Civil Engineering Specifications
(http://www.afcesa.af.mil/publications/ETLs/default.html
~~Interim Department of Defense Antiterrorism/Force Protection Construction Standards~~
~~(hard copy available from Mr. Saepoff)~~

2.2 BASIC REQUIREMENTS

2.2.1 General: Construction shall be in accordance with the following codes, standards, and regulations. The most stringent shall govern when discrepancies occur.

(1) Building Code: Uniform Building Code (UBC), (1997).

(2) Mechanical Code: Uniform Mechanical Code (UMC), (1994).

(3) Plumbing Code: National Standard Plumbing Code (NSPC), (1996).

(4) Electrical Codes: National Electrical Code, (1999). National Electrical Safety Code, (1997).

(5) National Fire Protection Association Fire Codes (NFPA), latest editions as specified.

(6) Life Safety Code: National Fire Protection Association, NFPA 101 (1997).

(7) MIL-HDBK-1008C, Fire Protection for Facilities. Requirements of this handbook shall govern over other standards for fire protection and life safety.

(8) MIL-HDBK-1190 - Facility Planning and Design Guide.

(9) Uniform Federal Accessibility Standards (UFAS - 49FR 31528).

(10) Americans With Disabilities Act (ADA).

(11) Technical Instruction TI 800-01 - Design Criteria (1998).

(12) Technical Instruction TI 800-3 - Technical Requirements for Design-Build (1998)

(13) AFPAM 32-1097 - Sign Standard Pamphlet

2.2.2 Civil:

Air Force Manuals:

(1) AFM 88-6, Chapter 8, Standard Practices for Concrete Pavements.

(2) AFM 88-7 General Provisions and Geometric Designs for Roads, Streets, Walls, and Open Storage Areas.

(3) AFM 88-11 Sanitary and Industrial Wastewater Collection - Gravity Sewers and Appurtenances.

Design criteria for pavement design shall be in accordance with the criteria specified in the attached Geotechnical Report (see Appendix C) and paragraph 3.1 CIVIL DESIGN REQUIREMENTS, (6) Roadways.

2.2.3 Structural: Structural design shall comply with the requirements of the latest editions of the following codes, standards, and specifications.

(1) American Concrete Institute (ACI), "ACI-318, Building Code Requirements for Reinforced Concrete."

(2) American Institute of Steel Construction (AISC), "Specification for the Design, Fabrication, and Erection of Structural Steel for Buildings."

(3) American Iron and Steel Institute (AISI), "Specifications for the Design of Cold-Formed Steel Structural Members."

(4) American Society of Civil Engineers (ASCE 7), "Minimum Design Codes for Buildings and Other Structures" (Formerly ANSI A58.1)

(5) American National Standards Institute (ANSI), "American Standard Building Code Requirements for Reinforced Masonry."

(6) American Welding Society (AWS), "Structural Welding Code."

(7) American Society for Testing and Materials (ASTM) as noted.

(8) Metal Building Manufacturers Association (MBMA), "Low Rise Building System Manual."

(9) Steel Joist Institute (SJI), "Standard Specifications Load Tables and Weight Tables for Steel Joists and Joist Girders; Open Web Steel Joists, Longspan and Deep Longspan Steel Joists," and similar publications covering steel joists.

(10) See Paragraph 3.3 STRUCTURAL REQUIREMENTS for specific structural design requirements including new seismic regulations.

2.2.4 Architectural:

(1) Architectural design shall conform to the guidance furnished in this RFP, shall be in accordance with the above mentioned Air Force criteria, and compliant with the Base Comprehensive Plan and Base General Plan.

(2) The choice of exterior colors, finishes and materials for this facility shall be in agreement with the guidance furnished herein.

(3) Life Safety design shall be in accordance with NFPA 101 Code for Safety to Life from Fire in Buildings and Structures, MIL-HDBK-1008C and the guidance furnished herein.

2.2.5 Mechanical:

All mechanical equipment provided and furnished shall be installed so that it is easily accessible for maintenance and repair or replacement. It shall be in compliance with local codes and ordinances, the Uniform Mechanical Code (UMC), the applicable codes and standards of the National Fire Protection Association (NFPA) and Underwriters Laboratories (UL), and the criteria and requirements specified in this RFP. Access to mechanical room shall be from exterior of the building.

2.2.6 Electrical:

Electrical wiring shall comply with the current regulations of the National Electrical Safety Code, National Electrical Code, National Fire Protection Association Life Safety Code, and the criteria and requirements specified in this RFP. Equipment shall conform to the requirements of the Institute of Electrical and Electronics Engineers, American Standards Association, National Electrical Manufacturers Association and Underwriters Laboratories, Inc.

2.2.7 Fire Protection/Detection:

Fire protection shall be provided by providing a complete wet pipe system to protect the heated areas of the facility. Fire detection and additional fire protection requirements are specified in paragraphs 3.6 and 3.4.12 FIRE DETECTION AND PROTECTION REQUIREMENTS.

SECTION 00860

STATEMENT OF WORK
PART II

3. DESIGN DEVELOPMENT TECHNICAL REQUIREMENTS

3.1 CIVIL DESIGN REQUIREMENTS

3.1.1 Civil design and construction shall be in accordance with State of Montana highway requirements, the Geotechnical Report (see Appendix C), with the applicable requirements of paragraph 2. CODES AND STANDARDS and other requirements as stated herein.

3.1.2 Site Planning:

(1) General. The project site is adjacent to Building 655, as shown on the Conceptual Site Plan (See Appendix B). For additional information concerning access see Section 01005 - Site Specific Supplementary Requirements, paragraph Coordination and Access to Site.

(2) Site Plan. The Conceptual Site Plan (See Appendix B), shows existing topography, utilities, streets, etc., in the vicinity of the new dormitory (Building 640). The site engineering shall be developed to provide the facility as depicted in these documents and to meet the requirements specified herein.

3.1.3 Site Design:

(1) General Site Requirements. Overall site design shall conform to the guidance provided herein.

(a) Compliance with the Geotechnical Report, furnished with this RFP, is mandatory. The foundation exploration holes as shown were located based on the conceptual site layout. If the Contractor chooses to propose alternative site layout, then any additional foundation exploration work shall be his responsibility.

(b) The Contractor shall confine all proposed development to be within the project boundaries indicated on the Site Plan. Under no circumstances shall the Contractor contemplate any work off the site except as authorized in the RFP or in writing by the CO. Required utility connections are an exception to this requirement.

(c) New underground utility lines, including appurtenant structures such as manholes, vaults, etc., shall not, where practical, be located under road pavement, road shoulders, sidewalks or drainage ditches.

(d) Utility lines to be demolished, shall be cut and capped at the street in a manner approved by the Corps of Engineers.

(e) All utility lines installed shall have a plastic marker tape (minimum 15 centimeters by .01 centimeter) installed 20 to 26 centimeters below grade. The plastic marker tape shall include a metallic wire for detection purposes and shall bear a continuous printed inscription describing the type of utility line buried below. Utility line monument markers (concrete with brass identification plugs) shall be installed every 60 meters along straight runs and at each change of direction. Any existing marker tapes or tracer wires damaged during construction shall be repaired to original condition.

(f) Protect existing utility lines when new pavements are constructed over them. Existing cover over utilities shall be maintained. If existing cover is not maintained over pipes, the pipe shall be redesigned for the loading specified in paragraph (6) Driveways and Parking Areas.

(g) The dumpster pad, chiller pad and the electrical service pad-mounted transformer are to be screened with an architectural screen (split face CMU posts with antique linen vinyl fencing). The enclosure shall be designed and constructed in accordance with drawing C1.2 (see Appendix B). Maintenance access shall be provided by a gate with vertical vinyl slats for visual screening. Provide an apron in front of dumpster where the wheels of the truck bear during dumpster dumping, and bollards at the back of slab to prevent sliding in winter.

(h) Existing Structures. During demolition of Buildings Nos. 624, 625, 626, and 627, the foundation footings with stem walls were apparently left in place. Limited exploration was conducted to determine the extent of these features. The footings are approximately 150 mm thick by 300 mm wide with a 150 mm thick stem wall attached. The depths to the top of the footings varying from about 500 mm to 740 mm below the existing ground surface. The Contractor shall verify these structures and shall be responsible for removal within the construction limits of this project. Refer to the geotechnical report for details.

(2) Storm Drainage:

(a) Minimum grades for surface drainage shall conform to the guidance provided in the Geotechnical Report.

(b) Runoff generated from construction of this facility shall be collected and directed to existing drainage facilities. Storm drainage calculations, including runoff from adjacent properties, and discharge volume shall follow AFM 88-5, Chapters 1 - 4, and applicable chapters of AFM 88-6, AFM 88-7 and AFM 86-8, and shall be based on 100 mm of rain in a 15-minute period. See Specification Section 01061 - Environmental Protection, for permit requirements.

(c) Catch basin grates shall be bicycle proof design.

(d) Curbs proposed to facilitate drainage design shall be Portland cement concrete and shall comply with the curb design details provided (attached at the end of this section) and ADA requirements.

(e) Runoff from paving where vehicular oils will be present shall be collected into polyethylene-lined drain pockets or swales for natural evaporation. Storm drain areas shall be consistent with landscape theme.

(3) Water Distribution:

(a) Water distribution shall be designed and constructed in accordance with local standards and codes. Mains and piping shall be disinfected in accordance with AWWA manual C-651. The Contractor shall perform pressure and flow tests on the existing water system before design and construction of the fire protection system.

(b) Water distribution main shall be of adequate size to satisfy both facility and fire flow requirements in accordance with MIL-HDBK-1008C, Chapter 5. Water system shall comply with the design requirements in MIL-HDBK-1190 and local standards and codes.

(c) ~~Not Used.~~ The existing water flow and pressure tests results on hydrant in the project area are as shown below:

Test Hydrant	Static pressure …….. 55 psi Residual pressure ……45 psi Water flow ……978 gpm

(d) Existing 203-mm water main is located as shown on the Existing Site Conditions drawing. Proposer/Contractor is to develop the system in accordance with the requirements given herein.

(e) Facility pressure shall be a minimum of 1.4 kg per square cm and a maximum of 5.25 kg per square cm at each outlet after allowing for friction and other losses. System design shall provide a minimum residual pressure of 1.4 kg per square cm at each fire hydrant. Water main shall be of appropriate capacity to provide the required fire flow and duration.

(f) Fire hydrants shall be UL listed dry barrel type with break away flange and shall match in appearance and threading those presently in use on the installation. Add fire hydrants so that no portion of the building is more than 45 meters from at least one hydrant. Hydrants shall be located in accordance with MIL-HDBK-1008C, Section 5.7.3, and approved by the CO. Hydrant valve shall be flanged off at main per Malmstrom AFB standards. Hydrant laterals shall be 152 mm minimum size, and shall have an underground shutoff valve with an adjustable valve box in each lateral within 3 meters of the hydrant. Hydrants shall be within 610 mm from finished ground to top nut of hydrant and 460 mm to center of pumper connection. Hydrants shall be painted according to color code per Base standard (see attached sketch).

(g) All plugs, caps, tees, bends, and hydrants on water mains and hydrant laterals shall be provided with reaction backing or movement prevented by attaching metal tie rods or clamps.

(h) Water mains and services shall be separate from parallel sanitary sewers by 3 meters, center to center. If water line and sanitary sewer cross, sewer pipe shall be concrete-encased 3 meters on each side of crossing.

(i) Contractor shall coordinate all work on existing and new water lines with the CO.

(j) Water lines shall have a minimum cover as specified in the Geotechnical Report.

(k) Curb stops shall be provided for all water service lines. Service boxes shall be provided for all curb stops and shall extend to finished grade. The facility shall also be provided with an interior service main cutoff valve. Service lines shall have 2 meter minimum burial.

(l) All metal water fittings shall be wrapped with polyethylene per AWWA specifications.

(4) Sanitary Sewer:

(a) Sanitary sewer design, construction and leakage testing shall conform to the National Standard Plumbing Code published by National Association of Plumbing-Heating-Cooling Contractors (NAPHCC). Pipe materials and joints shall conform to the applicable ASTM, ANSI or other Standard as appropriate.

(b) Manholes shall be placed at all angles and intersections. All sanitary sewers shall have straight alignment between manholes.

(c) Contractor shall coordinate all work on existing sanitary sewer lines with the CO.

(d) Maintain existing flow velocity or design new lines for a minimum of 610 mm per second for average flow.

(e) Manhole covers located in pavements shall be designed for the design loading specified in paragraph (6) Driveways and Parking Areas or HS 20, whichever is larger.

(5) Natural Gas Distribution:

(a) The Dormitory shall use natural gas for domestic hot water and mechanical room space heating for the summer. The winter hot water and space heating shall be provided by connecting to the existing base distribution, supplying high temperature hot water. The Contractor shall coordinate installation with the Base Civil Engineer through the Contracting Officer to provide natural gas service to the new dormitory from the natural gas line servicing Building No. 655, as shown on the Conceptual Site Plan . Gas lines are base owned.

(6) Walkways, Driveways and Parking Areas:

(a) The Concept Site Plan (see Appendix B) is representative of the general requirements for access. The proposer is responsible to develop the plan and incorporate the requirements stated herein.

(b) Design loading is as stated in Geotechnical Report (Appendix C).

(c) Pavements are to be in accordance with the requirements specified in the Geotechnical Report. Walkways shall be portland cement concrete overlaying 100 mm thick non frost susceptible compacted based course. All other new pavements shall be asphaltic concrete.

(d) Driveways and parking areas shall have gradients of a maximum 5 percent and a minimum of 0.5 percent. Grade to avoid ponding.

(e) Driveways shall be constructed to match grade of existing roads where new work meets existing. Industrial gate on driveway to Mechanical Room is desirable.

(f) Provide bollards in front of main entrance to prevent vehicles from driving into the buildings

(7) Soil Compaction. Soil compaction shall be achieved with equipment suited to the particular soil being compacted and as approved by the CO. Material shall be moistened or aerated as necessary to provide the moisture content that will readily facilitate obtaining the compaction specified with the equipment used. Each layer of material shall be compacted to not less than the percentage of maximum density specified in the specifications.

(8) Landscape. Landscape plans shall be developed by a registered landscape architect, familiar with local conditions and plant species. Landscape design shall follow the guidance provided herein and that provided in the section Landscape Architecture of the Malmstrom AFB Architectural Compatibility Guide, Chapter 4, Landscape Standards in the Air Force Facilities Excellence Program and Standards Handbook Guide (see paragraph 2.1.4) and the USAF Landscape Design Guide website (http://www.afcee.brooks.af.mil/dc/dcd/land/ldg/index.html).

(a) The site is to be graded as specified in the Geotechnical Report to provide positive drainage and visually enhance the site. Existing stripped or off-site topsoil shall be provided for all seeded or sodded areas. Planting soil mix shall be provided as backfill for trees, shrubs, and groundcovers. .

(b) Turf shall be provided in accordance with the guidance provided herein and in specification 02921 Seeding and 02922 Sodding. All irrigated turf is to be sod. Non-irrigated areas to be seeded with dryland seed mix, see page 0890-4, 02921). Fertilizer shall be as recommended by the local county extension service. Turf establishment period for sodded areas shall be in effect for a minimum of 1 month or until a proper stand of turf is obtained, whichever is longer. The turf establishment period for seeded areas shall be a minimum of 3 months. Contractor shall be responsible for watering, mowing, proper care and maintenance of the seeded or sodded turf during establishment and up to and including the final acceptance..

(c) Repair of seeded and sodded areas: Whenever any portion of the ground surface becomes gullied or otherwise damaged following seeding or sodding and within the period of the Contractor's responsibility, the affected portion shall be repaired to reestablish the condition and grade of

the soil and shall be reseeded/resodded as specified for the initial installation. Repair work to correct damages resulting from faulty operations or negligence on the part of the Contractor shall be done at no additional expense to the Government, and shall be maintained until the termination of the establishment period.

(d) Planting beds shall be comprised of river rock, 50 mm minus over permeable weed barrier fabric. Bark mulch shall be provided within the root zones of installed shrubs and groundcovers and within a 1M (3 foot) min. diameter circle around newly installed trees. Provide concrete edging/mow strips at the edges of planting beds and lawns. Provide 125 mm (5") heavy duty plastic edging to separate different mulches and around mulched tree circles. Planting beds around the dormitory shall be provided to enhance the building and grounds for an attractive low-maintenance landscape environment. Foundation plantings and planting beds shall function to emphasize building entries, identify circulation paths, screen mechanical equipment, moderate building temperatures, and as a buffer from turf irrigation head backspray. Deciduous tree planting shall shade and minimize glare of parking and large paved areas. Evergreen trees shall provide visual screening and deflect undesirable winds to enhance use of the site by dorm residents. Provide river rock around the base of building perimeters for roof drainage. Provide a mowing strip around trees and other plant groupings to prevent damage from grounds maintenance equipment.

(e) Plant materials shall be installed in accordance with the guidance provided in specification 02930 - Exterior Planting. Plant materials installed shall be warranted, established, and maintained for a minimum period of one year from the date of installation. If more than one plant material establishment period exists, dates and limits of planting areas shall be clearly marked on a drawing for ease of communication and approval by the Contracting Officer. Provide a #5 container (5 gallon) minimum size for shrubs, a 63mm caliper minimum size for deciduous trees, a 2M minimum height for evergreen trees, and a #1 container (1 gallon) minimum size for groundcovers. All plant materials shall be carefully installed and all burlap, wire or plastic removed from the plants during planting. The distances that trees and shrubs are planted from the building foundations shall be consistent with the geotechnical requirements for this project and the Base Architectural Compatibility Guide.

(f) Landscape berming shall provide screening and enhance the visual aesthetics of the site. Berm material shall be suitable to support plant growth. Berm size, heights and slopes (no greater than 4:1) should appear smooth and natural, blending to surrounding areas. A heavily planted landscape berm shall be provided between parking and streets as

indicated on the site plan to screen unsightly views of paving and parked cars. In long expanses, the top of the berm should undulate to avoid visual monotony.

(g) Provide an irrigation system in accordance with the guidance provided in specification 02811 Irrigation Sprinkler Systems. The system shall be designed by a certified irrigation designer. The system shall be water efficient drip system for all plantings except for turf which shall be irrigated with highly durable and easily maintainable pop-up spray heads. Full coverage of plantings and turf areas shall be provided. Design irrigation to provide positive drainage and to avoid low spots which do not drain properly. The irrigation system shall be compatible with the bases' central Management Irrigation Control System (IMCS), currently being designed by Carl Thuesen, ASLA, telephone 406-252-5545. The irrigation system shall be connected to the Base IMCS. See specification 02811 for specific requirements.

(9) Site Amenities: Site amenities for this project shall include bike racks, benches, trash receptacles and a picnic shelter and shall enhance the aesthetics and function of the common areas of the site. The picnic shelter shall be centrally located and easily accessible within the open space of the project. The building number for the picnic shelter shall be 641. The picnic shelter for the new dormitory shall include a electrical and gas hookup, water, lighting, and site furniture as appropriate. A picnic shelter which was previously designed for the dormitory building number 655 shall also be installed by this proposer as indicated on the site plan and drawings provided with utilities as described as above.

(10) Exterior Signage: Exterior signage shall be provided as indicated on the site plan. Design of exterior signage shall meet the requirements of the Malmstrom Base Architectural Compatibility Guide. Location of the signage shall be well coordinated with the landscape plan, exterior utilities, and traffic engineering.

3.2 ARCHITECTURAL REQUIREMENTS

3.2.1 Space Requirements

Construction standards for enlisted dormitories include requirements for both net and gross areas. Table 1 identifies the construction standards required to support unaccompanied enlisted personnel and Table 2 identifies the space requirements for this project. The functional space areas required are residential areas, recreation/community areas, and service areas.

Definitions:

Net Living Area - the clear area measured to the inside face of the room walls available for beds and other free-standing furniture, wardrobe space and general living. This net area is to be identical in size, shape and form to the net area shown on the module plan.

Gross Area: The following definitions of gross areas is provided to assist the Contractor in calculating the gross overall area.

Gross Module Area - the area within the perimeter of the module including the exterior wall thickness and from the center line of shared walls with interior corridors, vertical chases, and other rooms. This area may vary depending upon the type of construction proposed. Even if the wall thickness changes due to the type of construction used, net area must stay the same as shown in the module plan.

Gross Building Area - this area is measured to the outside face of the exterior enclosure walls. Do not include normal roof overhangs in gross building area. Normal roof overhangs are generally less than three feet wide and are unsupported by columns. Exterior covered areas such as balconies count as half scope and are measured from the face of the enclosure wall to the edge of the covered area. Stairs count as half scope per floor that they serve.

Table 1: Dormitory Module Construction Standards

Net Living (Bedroom) Area per Person (E1 - E4)	In accordance with the Module Plan
Maximum Number of Persons per Module	2 (1 per side)
Kitchen and Bath Configuration	In accordance with the Module Plan

Table 2: Dormitory Space Requirements

Functional Space	Recommended Minimum Net Area (m^2)
Recreation Areas:	
TV Room/Lounge	13.9 m^2
Video Room	28 m^2
Support Areas	

(Actual areas based on final design)	
Laundry Room	2.3 m^2 per appliance (12 sets)
Kitchenette Area	9.3 m^2
Visitor Toilet	4.6 m^2
Administration Area	19 m^2
Bulk Storage	1 locker per .66 person
Utility space	No minimum
Circulation space	7.4 m^2 per module
Max Gross Total Area	**5200 m^2**

(1) Residential Areas. The residential areas (Module shown herein) are designed to support two enlisted personnel. The module design is based on the standard Air Space Command scheme with interior corridor entry.

(a) Living/Bedroom Area. The net living/bedroom area shall be in accordance with the Module Plan . There are two living/bedroom areas per module. Each living/bedroom area is designed to support one person. Each room will be prewired for telephone, cable television, and computer connections. The living/bedroom areas will have windows to ensure natural light is available. Walls between living units (modules) and between living units and corridors, and between living/bedrooms within the modules and exterior walls of living units must have a Sound Transmission Class (STC) of at least 50. Floor and ceiling assemblies must have an STC of at least 55 and an Impact Insulation Class (IIC) of at least 60. Telephone, TV, convenience outlets, plumbing and mechanical ducts must not compromise the acoustical integrity of wall, floor, or ceiling assemblies. Fluorescent lamp ballasts shall be selected to minimize noise generation.

(b) Bathroom. The bathroom includes a bathtub, toilet, and complete bath accessories. Provide adequate exhaust ventilation from the bathroom to the building exterior (see paragraph 3.4 Mechanical Requirements).

(c) Vanity. The vanities are located in the living/bedroom areas. Vanity construction shall feature either plastic laminate counter and drop-in lavatory or preferred integral cultured marble bowl and countertop. Vanities shall have full width base cabinets with at least two drawers, full-width mirror over the vanity, medicine cabinet, and wall-mounted vanity accessories. Provide a duplex ground fault interrupt (GFI) convenience outlet at each vanity (side opposite the lavatory).

(d) Kitchen. The minimum kitchen equipment will include a double-bowl sink with garbage disposal, conventional range with self-cleaning oven with a four-burner cooktop, microwave , refrigerator, and base and wall cabinets. The

cabinet construction shall be custom grade in compliance with Kitchen Cabinet Manufacturers' Standards, either particle board with laminate surfaces, or, as a desirable feature, solid oak wood with raised panels and solid surface countertops. Adequate dining area space shall be provided for two people with a table and two chairs. (Note: furniture is not part of this contract.) Range, refrigerator, and microwave will be Government furnished, Contractor installed (GFCI). The wall between the base and wall cabinets and the wall from the range to the exhaust hood shall be covered with vertical grade laminate matching the countertops. One stack of drawers with a cutting board is to be located adjacent to the kitchen sink.

(e) In-Room Storage. Each living/bedroom has a lighted walk-in closet with clothes rods and shelving above. Provide a single rod/shelf at 68" on the long wall and two rods/shelves on the short wall, one at 42" and the other at 84".

(f) Utility Areas. As shown on the Residential Module Plan (Plate A1.4), utility space will be accessible from the hallway. This utility space is designed to provide maintenance access for the HVAC fan coil units for the modules without having to enter private living quarters. The access is through a door which is to be set flush to the hallway finish wall surface and detailed to blend with the finished wall surface. Hardware on the hall side of the door is to be key operated and either fully recessed or flush mounted. The utility area shall have shutoff valves for all hot and cold water to each fan coil unit and to domestic water supply for each module to allow each module fan coil unit and water supply to be individually isolated without effecting other units. The unions connecting the fan coil units to the supply and return shall be designed for quick disconnect to make replacement easier. The Contractor shall construct and complete one sample module utility space for Contracting Officer's Representative's approval, before proceeding with the construction of the rest of the utility spaces. Once approved, it will serve as a "model" for all other module utility areas in the facility.

(2) Recreation/Community Areas. The dormitory will have common recreation and lounge areas within the building for gatherings of occupants and guests. Some equipment and furnishings within these spaces will be GFCI (see paragraph GOVERNMENT FURNISHED ITEMS below). All windows in the community areas shall have 1" Venetian blinds as specified (i.e. any exterior or interior window NOT in the living/bedroom area). Upgrade of the mini-blinds is desirable (better quality, duet, fancier style or fabric, etc.) and will be rated as such.

(a) Television and Video Rooms. A video room may be provided on the second and third floors only. The television room on the first floor shall be designed to accommodate a pool table, wall mounted television and high back stools. If the video room is incorporated into the television room, it needs to be separated audibly from the television room. The main television room shall be provided on the second floor of the building. The room shall be designed to accommodate a

large-screen television and surround sound stereo system. The television room on the third floor shall be designed to accommodate a game table, wall mounted television, and high back stools.

(3) Service Areas. Service areas are to be accessible to all dormitory residents and shall be designed with this in mind.

(a) Laundry Rooms. Laundry rooms should be located so that each occupant of the building has access to these facilities on the floor on which they live. Locating the laundry rooms close to the recreation rooms is desirable. Each laundry room requires space for washers, dryers, and ice machine. Washers, dryers and ice machines are GFCI. Each laundry room shall have stainless steel service sink, built-in clothes ironing board, folding tables and hanging rods, and laundry vending machines, Contractor furnished, Contractor installed. Rough-in for 3 washers, 4 dryers on the first floor; 4 washers, 5 dryers to vent to the exterior for each of the upper floors. Also rough-in for an ice machine at each floor. All utility connections shall be concealed. Provide minimum of two (2) floor drains.

(b) Mail Service. The mail service area will be centrally located within each building near the dormitory manager's office. One lockable United States Postal Service approved mailbox will be provided for each resident. The minimum dimensions for the mailboxes are 152 mm wide by 127 mm tall by 394 mm deep. The mailboxes will be front loading from the hallway. Residents will pick up large packages at the Base Post Office. Provide mail drop in service area for letters and small packages.

(c) Kitchenette Area. The dormitory will have a common kitchenette near the first floor television room. The kitchenette equipment shall include a double stainless steel sink, garbage disposal and dishwasher (all CFCI) and a four-burner electric range with electric oven (GFCI), large microwave oven(GFCI), and full-size refrigerator/freezer(GFCI). Built-in base and wall cabinets and countertop shall also be provided (CFCI). Space for tables and chairs shall be provided for sit-down eating. (Note: furniture is not part of this contract.)

(d) Bulk Storage. A bulk storage area will be located on each floor with 1,200 mm wide by 1,200 mm deep by 2,400 mm high lockable cage/lockers for each resident (144) to store personal belongings. Provide heavy-duty hasp on each locker; the padlocks will be furnished by the Government. Provide card locks for the access to the storage area. The storage space shall be minimally heated.

(e) Administration Area. The administration area consists of an office for the facility manager. The office is to be located near the main building entrance with adequate visibility from the office to adjacent common areas, including the mail box area.

(f) Utility Space. Utility space includes areas for mechanical, electrical, and communications equipment. A central mechanical room shall be located on the first floor. The mechanical room shall support all equipment required for heating, cooling, and domestic hot water. A separate main electrical room shall be located on the first floor with smaller electrical distribution panels on the second and third floors. The main mechanical and electrical rooms shall be accessed from the exterior of the building. A separate main communications room shall be located on the first floor with smaller communications distribution panels on the second and third floors. A janitor closet, with sink and cleaning supply storage, shall be provided on each floor. A vending alcove with utilities (including a floor drain for vending machines [GFGI]) shall be provided on first floor only.

(g) Visitor Toilet. A single restroom facility for men and women is to be provided on the first floor for residents and visiting guests. The restroom shall meet all handicap requirements and contain one lavatory, one water closet, and required accessories.

(h) Circulation Space. The dormitory is to be designed with interior, double-loaded corridors. The dormitory layout should give the residents a sense of community by avoiding the long, poorly lit corridors that create a “tunnel” effect. Entryway shall be attractive and inviting. Entryway ceiling shall be of higher elevation than other hallways. Living module entry doors are to be recessed off hallway with brighter, fluorescent type lighting provided during the daytime and softer, lower levels of incandescent lighting for the evening hours (see paragraph 3.5.3 Lighting). Adequate access to the second and third floors is to be provided by stairwells.

(i) Vending Space. Provide space to accommodate one candy machine and one beverage machine on the first floor only. The preferred location for the vending machines is a separate niche, not visible from the main entrance. Optional location shall be the first floor laundry room.

3.2.2 Government Furnished Items

(1) General: The Government will furnish the items of equipment and furnishings as itemized below. All items listed below will be delivered to the Contractor for storage, assembly and installation. The Contractor is responsible for protection and installation of all items as specified into the completed facility. Installation shall be after the pre-final inspection discrepancies have been corrected and prior to the final inspection. For Contractor’s planning, the items will be delivered no earlier than 30 days prior to the pre-final inspection and no later than 30 days after the pre-final inspection. The final inspection will not occur until all items are installed in place. Minor changes to this list may be made by the Government to accommodate availability of items. When the Government furnished items are delivered the Contractor shall verify the quantity and condition and acknowledge receipt in writing to the CO. The Contractor shall also report

in writing to the CO within 24 hours of delivery any damage to or shortage of the property as received.

(2) Summary of Government Furnished Contractor Installed (GF/CI) Items for the 144 person Dormitory:

Quantity	Item Description	Size
Module Kitchen:		
72	RANGE	20” X 25” X 41”
72	REFRIGERATOR	23 3/8 ” X 31 7/16" X 60 5/8"
72	MICROWAVE OVEN	20 ½ X 15 3/8" X 12"
Common/Other Areas:		
1	RANGE	30” X 28” X 45”
1	REFRIGERATOR/FREEZER	30” X 28” X 64”
1	MICROWAVE OVEN	24” X 16” X 15”
1	POOL TABLE	62” X 112” (NOTE: 1000 LBS)
11	WASHING MACHINE	28” X 26” X 43”
14	DRYER	28” X 26” X 43”
50	ARTWORK	AVERAGE 24” X 36”
3	ICE MACHINE	36” X 25” X 40”

3.2.3 Architectural Design

(1) Exterior Design. The new 144-person Dormitory is to be constructed with non-combustible, low-maintenance materials that are compatible with the guidance provided herein. The dormitory exterior design is to feature walls constructed of integral colored split-faced and smooth accent CMU, medium weight concrete masonry units (CMU), and a standing seam metal roof (see paragraph 2.2.3). Any boiler flues that are on the exterior of the building must be enclosed in masonry to match the outside of the building. Plate A1-3 - Building Concept Elevations provide a conceptual representation of the facility design. Plate A1.1 and A1.2 provide conceptual representations of the first floor, second and third floor plans, not a definitive design solution. Proposers are to develop original design solutions while meeting the criteria stated herein.

(2) Exterior Finishes: Structural standing seam metal roofing, metal doors, frames of bicycle storage railings, and bicycle rack shall be dark brown to match Fed. Std. #37056. Aluminum doors and frames and aluminum windows shall have dark bronze anodized finish per base design standards. Laminated slabs in windows is desirable.

Integral block color, pre-cast concrete sills and lintels and exterior insulation and finish system (EFIS) shall be Antique Linen to match Fed. Std. #23578. Accent integral block shall be integral color of dark brown to match Fed. Std. #37056. Gutters and downspouts shall be factory finished external type fastened to fascia, color to match the roof. Internal gutters and downspouts shall not be used. Miscellaneous exterior exposed items such as: gas meters, louvers and backdraft dampers shall be painted to match building color. All manufacturer's names are listed to indicate color, pattern, texture, and are not intended to limit selection or to be proprietary. Attached specifications (see Appendix A) cover the products/work to be included in the project and requirements concerning materials, finishes and procedures.

(3) Interior Design: The facility interior design shall be appropriate for the designed function of the space, utilizing materials with low maintenance qualities for the anticipated use, as well as consideration for health, fire and life safety requirements. High quality, aesthetically pleasing materials are desirable whenever possible, while keeping the cost of the project within budget. Command standards require that all permanent finishes (vinyl flooring, ceramic tile, plastic laminates, and etc.) be in either brown-tone or gray-tone neutrals. These neutral shades can be from very light (such as off-white relating to the particular color tone) to a mid-range neutral of this same shade. Non-permanent finishes (carpet, paint, vinyl wall coverings, and etc.) may be any coloration appropriate to the facility. Use color to add interest and vitality, but do not allow color to dominate the environment. Paint ceilings off-white; avoid acoustical textured treatment. The table below provides suggested surface finishes. Attached specifications (see Appendix A) cover the products/work to be included in the project and requirements concerning materials, finishes and procedures. Each floor shall have a color scheme that is uniquely it's own. Interior design shall reinforce the residential character desired in the dormitory.

(4) Interior Signage: Interior signage shall be as specified in specification 10440 and in compliance with Malmstrom AFB Architectural Compatibility Guide. Submit sign samples and number/labeling plan for all rooms in the facility to the CO for approval prior to fabrication.

(5) Interior Finishes:

Suggested Surface Finish Schedule

Functional Area	FLOOR	WALL	CEILING
Living Units			
Living/Bedroom	CA	GWB/P	GWB/P
Bathroom	CT	GWB/P	GWB/P

Vanity Area	SV	GWB/WC	GWB/P
Entry	SV	GWB/P	GWB/P
Kitchen	SV	GWB/P	GWB/P
Common Areas			
Entries	CT,RT,QT	GWB/WC	GWB
Corridors	CA	GWB/P,WC	GWB
TV, Video Rooms	CA	GWB/P,WC	GWB
Laundry Rooms	QT,RT.CT,SV	GWB/P	GWB
Kitchens	QT,RT.CT,SV	GWB/P	GWB/P
Storage Rooms	SC,VT	GWB/P	GWB/P
Toilets	CT,QT,SV	CT,GWB/WC	GWB/P
Administrative Areas	CA	GWB/P,WC	GWB
Landings at Stairways	RT	GWB/P	GWB/P

ABBREVIATIONS:

CA	Carpet	SV	Sheet Vinyl
CT	Ceramic Tile	VT	Vinyl Composition Tile
GWB	Gypsum Wall Board	WC	Wainscot (CT)
P	Painted		
QT	Quarry Tile		
RT	Rubber Tile		
SC	Sealed Concrete		

3.3 STRUCTURAL REQUIREMENTS

3.3.1 Structural Design and construction shall be in accordance with the requirements stated herein, the Geotechnical Report and with the applicable requirements of paragraph " 2. CODES AND STANDARDS."

(1) Structural Design Submittal: Structural design drawings and computations, signed and sealed by a professional structural engineer registered in the United States, shall be submitted in accordance with Section 00810 Design-Build Contract Procedures, paragraph 2. Preparation of Phase I Project Design Documents.

(2) Structural Design Criteria: Structural design shall be in accordance with the following criteria as applied to standard facilities:

- HQUSACE, Technical Instructions, Load Assumptions for Buildings, TI 809-01, dated 03 August 1998.
- American Society of Civil Engineers (ASCE), Minimum Design Loads for Buildings and Other Structures, ASCE 7-95, dated 1996.
- HQUSACE, Technical Instructions, Structural Design Criteria for Buildings, TI 809-02, September 1999.

- HQ Department of the Army, Seismic Design for Buildings, TI 809-04 dated 31 December 1998. This publication is available on the web at www.hnd.usace.army.mil/techinfo/ti.html. The USGS Ground Motion maps referenced therein are available at http://geohazards.cr.usgs.gov/eq.
- HQUSAC, Technical Instructions, Design of Cold-Formed Load Bearing Steel Systems and Masonry Veneer/Steel Stud Walls, TI 809-07, dated 30 November 1998.

NOTE: HQUSACE publications are available from the USACE Techinfo web site at http://www.hnd.usace.army.mil - select Techinfo, Instructions, Technical Instructions.

(3) Seismic Design Requirements: Seismic design of the subject facility shall be performed in accordance with the requirements of TI 809-04 dated 31 December 1998, using the following design criteria:

Seismic Use Group	1
Short Period Spectral Acceleration, Ss (%G):	30
One Second Period Spectral Acceleration, S1 (%G):	10
Site Class:	D

(4) Wind Loads: Design of the subject facility for wind loads shall be performed in accordance with the requirements of ASCE 7-95, using the following design criteria:

Wind Velocity, 3-sec gust	40 m/s (90 mph)
Exposure Category	C
Building Category	II

(5) Snow Loads: Design of the subject facility for snow loads shall be performed in accordance with the requirements of ASCE 7-95, using the following design criteria:

Ground Snow Load	1.0 KN/m^2 (20 psf)
Building Category	II

(6) Floor Loads: Dead Load and Live Loads Per TI 809-01. Structural concrete slab-on-grade floors shall be of strength and thickness required for the various functional areas of the installation. Floors shall be functionally and aesthetically suitable for safe operation of the facility, including finish and flatness tolerance.

(7) Foundation Design for frost protection, soil properties, bearing capacity and floor slabs shall be in accordance with the guidance provided in the attached Geotechnical Report. Foundations shall be drilled piles (caissons) and grade beam.

(8) Material Strengths:

Concrete: f'c=27 MPa (4000 psi) minimum at 28 days.
CMU: f'm=10 MPa (1500 PSI) minimum.
Reinforcing Steel: ASTM A615, Grade 60.
Structural Steel:
Hot rolled shapes and plates - ASTM A36, Fy=250 MPa (36 ksi), or ASTM A 572, Fy = 345 MPa (50 ksi)
Structural tubing - ASTM A500, Fy=320 MPa (46 ksi),
Cold formed steel - Fy=380 MPa (55 ksi).
Open Web Steel Joist: Fy=350 MPa (50 ksi).

(9) Fabrication and Erection of Structural Steel shall be in accordance with the applicable provisions of AISC Code of Standard Practice Sections 6 and 7. The steel fabricator has to be certified under Category I in accordance with AISC Quality Certification Program. Structural framing shall be shop primed in accordance with the fabricators standard system.

3.4 MECHANICAL REQUIREMENTS

3.4.1 Mechanical design and construction shall be in accordance with the applicable requirements of paragraph 2, Codes and Standards, and the following:

ASHRAE (latest edition)	Heating, Refrigeration, Air Conditioning Handbooks of Fundamentals, Applications and Equipment

3.4.2 Design Conditions. The outside design temperatures used are based on AFM-88-29 (Engineering Weather Data), dated 1 July 1978. The inside design temperatures are based on MIL-HDBK-1190 (Facility Planning and Design Guide).

(1) Outside Winter

- Dry Bulb: -26 degrees C. (97 1/2 %) (-15 degrees F.)
- Dry Bulb: -29 degrees C. (99%) (-21 degrees F.)

(2) Inside Winter

- Administration Areas, Dry Bulb: 20 degrees C. (68 degrees F.)
- Warehouse, Dry Bulb: 10 degrees C. (50 degrees F.)
- Mechanical Room, Dry Bulb: 10 degrees C. (50 degrees F.)

(3) Outside Summer

- Dry Bulb: 32 degrees C. (2 1/2%) (89 degrees F.)
- Mean Coincident Wet Bulb: 16 degrees C. (61 degrees F.)
- Daily Range: 0 degrees C. (32 degrees F.)

(4) Inside Summer

- Administration Areas, Dry Bulb: 26 degrees C. (78 degrees F.)
- Mechanical Room, Dry Bulb: (Outside design temp.)+(10 degrees F.)=37 degrees C (99 degrees F.)

(5) Degree Days

- Heating: 7671 per year
- Cooling: 370 per year

(6) Elevation: 1074M (3525 feet)

(7) "U" factors (approximate):

• Walls (Living Spaces)	0.299 W/m^2K	(0.053 Btuh/(sqft)(deg F))
• Roof	0.148 W/m^2K	(0.026 Btuh/(sqft)(deg F))
• Windows	2.78 W/m^2K	(0.49 Btuh/(sqft)(deg F))

3.4.3 Thermal Insulation for Mechanical Systems

(1) Insulation Materials: Mineral fiber, cellular glass, or flexible cellular insulation. Aluminum jackets shall be provided at wall and roof penetrations, and on piping exposed to weather. Aluminum jacket securing bands shall be Type 304 stainless steel 0.38 mm (0.015-inch) thick , 13 mm (1/2-inch) wide. Duct board shall not be used.

(2) Installation. Insulation shall be kept clean and dry at all times. Joints shall be staggered on multilayer insulation. All insulation, jacketing and accessories shall be installed in accordance with MICA-01 (1993) "National Commercial & Industrial Insulation Standards" standard plates except where modified herein. Pipe insulation shall be continuous and installed on all fittings and appurtenances unless specified otherwise. Installation shall be with full length units of insulation and using a single cut piece to complete a run. Cut pieces or scraps abutting each other shall not be used.

3.4.4 Heating, Ventilation and Air Conditioning

(1) Building heating supply will be provided by connecting into the existing below-ground, high temperature hot water supply (HTHW) distribution station no. 666 near the FY 97 dormitory, building no. 655. Calculations for HTHW building requirements shall include system capacity verification at the valve station. The building service will be the direct-bury type, suitable for the minimum soil thermal conductivity and anticipated groundwater conditions. The high temperature heating water piping system shall be similar to the base existing system, which is steel conduit casing, calcium silicate insulation, and carbon steel pipe. The Contractor shall provide the appropriate cathodic

protection for the piping system. Provide cathodic isolation flanges such as Heck (High Temperature Electrical Cathodic Isolation Kit) by Miami Valley Gasket Co. or approved equal. The living areas shall be heated by fan coil units, located in a utility closet, and accessible from the hallway. Provide a wall mounted fin-tube heater below each bedroom window, and on perimeter walls of common areas and each floor level of stairwells as required. Provide individual wall mounted thermostat controls for fin-tube units. All piping to be concealed in walls or ceilings. Fin-tube units to be furnished with factory finished metal covers. The system shall be designed to maintain the temperatures indicated above. Heated and chilled water shall be treated with propylene glycol solution to provide –34 degrees C (–30 degress F). Heating water loops shall be provided with temperature reset based on outside air. All coils shall be controlled with three-way modulating control, with the exception of fan coils, unit heaters, convectors, and fin tube, that may be controlled with three-way, two position control valves. All coils shall be balanced with automatic flow control valves. Automatic flow control valves shall be of the stainless steel cartridge and ported cup design (such as Griswold or Autoflow). All control valves shall be protected with strainers. Temperature and pressure test plugs shall be installed on the inlet and outlet of all coils, strainers at pumps, boilers and chillers. Motor driven equipment shall be provided with vibration isolation and flexible connections. Condensate from the cooling coils shall be contained and drained to a floor drain as directly as practical to assure containment of the condensate and prevent water damage to the facility. In the utility closets, the condensate shall be drained directly into the same drainage system as provided for the utility closet receptor which shall be routed directly as practical. Running horizontal piping to interconnect utility closet drains or condensate drains on the same floor is not acceptable. Pump motors shall be sized to provide non-overloading operation over the entire pump curve. Redundant heating water pumps with automatic switch over upon pump failure shall be provided on the fan coil heating water loop. The chilled water pump(s) shall be shut down upon a fall below set point in outdoor air temperature.

(2) Ventilation. Ventilation shall be provided in accordance with ASHRAE Ventilation Standard 62 -- not less than 9.4 L/s (20 cfm) per person for general occupancy areas, not less than one person per sleeping room -- for acceptable indoor air quality. All ductwork shall be galvanized steel, constructed in accordance with SMACNA Low Pressure Duct Standards. Some means of heat recovery between the exhaust air stream and the ventilation air stream shall be provided – an air to air heat exchanger is preferred. It is desirable that any grates, louvres, or supply/return vents in occupied areas will be white or brushed aluminum finished, similar to other hardware finishes.

(a) Recreation/Community Areas: Constant volume air handling unit(s) shall be utilized to provide minimum outside air for ventilation.

(b) Toilet Exhaust System: For Living Module Bathrooms exhaust fans shall be provided to maintain 10 L/s (20 cfm) continuous. Design shall provide for continuous running central exhaust air fans serving all bathrooms and showers with individually controlled dampers and variable

air volume fans for intermittent use, or constant volume fans for continuous flow, with make-up air supplied from adjacent conditioned spaces. For Public Restrooms provide 25L/s (50 cfm) continuous exhaust air.

(c) Laundry Area: Provide an exhaust system manifold for dryer exhaust vents venting to outside. Provide backdraft dampers, as required, to prevent dryer exhaust from one unit re-entering the space through adjacent dryers which are not on. Provide access for lint removal from backdraft dampers and other components.

(d) Living Modules: Provide15 L/s (30 cfm) per module. Vertical units with corridor access shall be provided with preheated outside air through the use of 100 percent outside air handling units. Provide positive ventilation to the exterior for range hoods.

(3) Air Conditioning.

(a) Living Spaces: Cooling in areas shall be provided by a pad mounted unitary outdoor air cooled chiller piped to the fan coil units; refrigerant to be non-CFC type. Chilled water loop shall be provided with propylene glycol solution to provide -34 degrees C (–30 degrees F) protection. Rooftop equipment shall not be used. The number of stages of cooling capacity required shall be provided to preclude short cycling of the equipment. No diversity shall be applied to the chiller sizing. At a minimum the chiller shall be supplied to provide the following EMCS interface points:

- summary alarm
- chiller capacity status
- chiller leaving water temperature reset
- chiller enable/disable

(b) Storage, utility, and other unoccupied spaces shall not be air conditioned.

(4) HVAC Controls. Direct digital controls shall be provided for the main heating, ventilating and air conditioning systems. Fan coil units shall be DDC controlled, and be capable of remote monitoring from the base EMCS. EMCS system installed shall be compatible with the base's HSQ system. Unit heaters, convectors, fin tube, and utility room ventilation may be controlled through local thermostats provided with the equipment. Both the chilled water loop and the heating water loop shall be reset in response to outdoor air temperature. At a minimum the following points shall be monitored in additions to all other points required for control:

- chilled water return temperature
- heating water return temperature
- all chiller interface points

- filter status via differential pressure switch
- pump status via differential pressure switch
- fan status via current switch
- domestic hot water supply temperature

Sequences of control shall be provided in the O&M manual. Testing, adjusting, and balancing of the systems shall be coordinated with the control system installation. All HVAC control components shall be verified to be properly installed and operating as specified before proceeding with testing, adjusting, and balancing. HVAC commissioning procedures shall be used to verify the proper installation and functioning of the equipment. Contractor shall have the Mechanical Design Engineer of Record present on-site for all commissioning.

3.4.5 Mechanical Room

All mechanical equipment shall be sited as approved within the mechanical room or on grade outside the facility (no rooftop installations). Mechanical room shall allow for maintenance access.. Floor slab shall be sloped toward area floor drain. Pumps and other large floor-mounted equipment shall be mounted on housekeeping pads – 100 mm (4”) minimum height. Gauges shall be mounted to be easily readable. A single pressure gauge shall be manifolded across each pump inlet, outlet, and inlet to the suction diffuser (if used); ball valves shall be used for isolation on the threaded black A53 steel gauge manifold. Glycol protected closed loops shall have automatic make-up units to provide a back-up protection of –34 degrees C (-30 degrees F). . Thermometers shall be industrial dial type, not liquid filled “mercury” scale type, and shall be mounted in thermowells with conducting grease. Each closed loop system shall have a replaceable bladder type expansion tank, with the exception of the hot domestic water system, which may use a diaphragm type. Off each air separator shall be an industrial type air vent (iron body stainless steel moving parts, such as B&G 107a. At a minimum coils, chillers, and pumps shall be provided with isolation valves. Manual air vents shall be located on the high points of closed loop systems and hose connection drain cocks shall be located at all low points. Heating and cooling systems shall have a chemical pot feeder for closed system treatment.

3.4.6 Computer Simulation and Energy Budget

A computer simulation shall be performed using a program that is capable of performing an hourly analysis. The program may be used for equipment sizing and shall be used for an energy consumption analysis. The dormitory shall conform to the energy budget figure given in MIL-HDBK-1190 (Table 8 1) for Region 2 unaccompanied housing facilities, of 0.57 GJ/m^2/year (50,000 Btu/sqft/year).

3.4.7 Piping

Pipe installed shall be cut accurately to suit field conditions, shall be installed without springing or forcing, and shall properly clear windows, doors, and other openings. Piping, tubing and fittings shall be clean and free of cutting burrs and defects in structure or threading and shall be thoroughly brushed and chip-and scale-blown. Defects in piping, tubing or fittings shall be replaced. Pipes shall be free of oil, grease and other foreign material and shall be installed to permit free expansion and contraction without damaging the building structure, pipe, pipe joints, or pipe supports. Changes in direction shall be made with fittings, except that bending of pipe 100 mm (4 inches) and smaller will be permitted provided a pipe bender is used and wide sweep bends are formed. The centerline radius of bends shall not be less than 6 diameters of the pipe. Bent pipe showing kinks, wrinkles, flattening, or other malformations will not be accepted. Tees 25 mm (1”) or smaller may be pulled from copper mains 64 mm (2 1/2”) or larger. Vent pipes shall be carried through the roof as directed and shall be properly flashed. Horizontal supply mains shall pitch down in the direction of flow with a grade of not less than 0.21%. Open ends of pipelines and equipment shall be properly capped or plugged during installation to keep dirt or other foreign materials out of the systems. Pipe shall be uncoated. Unless otherwise specified, final connections to equipment shall be made with malleable-iron unions for steel pipe 65 mm (2-1/2 inches) or less in diameter and with flanges for pipe 80 mm (3 inches) or more in diameter. Unions for copper pipe or tubing shall be brass or bronze. Reducing fittings shall be used for changes in pipe sizes. In horizontal hot water lines, reducing fittings shall be eccentric type to maintain the top of the lines at the same level to prevent air binding. Piping subject to freezing shall be located within the building insulation envelope. Heat taping of pipes for freeze protection is not acceptable.

3.4.7.1 Pipe Zones: Domestic and HVAC piping shall be provided with zone isolation valves so that portions of each system may be isolated for operations and/or maintenance purposes without affecting the entire system.

3.4.8 Plumbing

(1) General: Water and sanitary service are provided nearby. Water piping and fittings shall be type L copper. Soil, waste and vent piping shall be no-hub cast iron. Hubless cast-iron soil pipe shall not be installed under concrete floor slabs. ABS and PVC may be used for drain piping. Water supply piping shall not be buried under concrete floors. Floor drains shall feature trap primers. Provide water meter. Plumbing materials, installation, backflow prevention, and drainage shall meet the latest National Standard Plumbing Code requirements. Domestic hot water shall be provided by HTHW system with gas for summer requirements (HTHW distribution system will be shut down during summer.) Locate water heater as close as practical to point of use. Hot water shall not exceed 120 degrees F. The floor drainage system shall allow dirty water to be collected for routing to the base waste water treatment system.

(2) Fixtures: Fixtures shall be water conservation type, in accordance with NAPHCC-01 National Standard Plumbing Code (1996). Fixtures for use by the physically handicapped shall be in accordance with Council of American Building Officials CABO A117.1, Accessible and Usable Buildings and Facilities (1992). Vitreous china, nonabsorbent, hard-burned, and vitrified throughout the body shall be provided. Porcelain enameled ware shall have specially selected, clear white, acid-resisting enamel coating evenly applied on surfaces. No fixture will be accepted that shows cracks, crazes, blisters, thin spots, or other flaws. Fixtures shall be equipped with appurtenances such as traps, faucets, stop valves, and drain fittings. Each fixture shall be equipped with a trap. Brass expansion or toggle bolts capped with acorn nuts shall be provided for supports, and polished chromium-plated pipe, valves, and fittings shall be provided where exposed to view. Faucets shall be washerless. Internal parts of flush and/or flushometer valves, shower mixing valves, shower head face plates, pop-up stoppers of lavatory waste, drains, and pop-up stoppers and overflow tees and shoes of bathtub waste drains may contain acetal resin, fluorocarbon, nylon, acrylonitrile-butadiene-styrene (ABS) or other plastic material, if the material has provided satisfactory service under actual commercial or industrial operating conditions for not less than 2 years. Plastic in contact with hot water shall be suitable for 82 degrees C (180 degrees F) water temperature. Water closets shall be siphon jet, white vitreous china elongated bowl, wall mounted with white open front seat and flush valve. Water closets shall be low volume flush, 11.4 liter (3 gallon) or less, having self closing faucet valves. Counter-top type lavatory shall be white enameled cast iron or cultured marble cast integral with the countertop and provided with mounting and single spout mixing faucet with lever handle. Janitor sink shall be floor mounted with mixing faucet with lever handles, rigid spout with hose threads, vacuum breaker, wall brace and pail hook. Kitchenette sink shall be type 302 or 304 stainless steel, 20 gauge minimum, seamless drawn, satin finish, sound deadened, double compartment (one basin larger than the other) with single spout mixing faucet with lever handle. Garbage disposals shall be continuous feed with minimum ½HP motor, stainless steel grinding elements, manual motor reset, sound insulation and plug type electrical connection. Shower heads shall be 5.7 liters per minute (1.5 gpm) low flow, with single control temperature/pressure compensating mixing faucets; shower heads shall be mounted at 2000mm minimum above shower floor surface. Water source shall be provided for ice maker. Water cooler shall conform to Air Conditioning and Refrigeration Institute ARI 1010 "Drinking-Fountains and Self-Contained, Mechanically-Refrigerated Drinking-Water Coolers" (1994), shall include stainless steel cabinet, 22 liter/hr (6 gph) 0.15 kW (1/5 hp) compressor, front and side push bar actuators, and be handicap accessible. Refrigerant shall be non-CFC. Plumbing fixtures shall be as follows:

Symbol	Fixture
P-1	Water Closet
P-1A	Water Closet (Handicapped)
P-2	Urinal
P-3	Lavatory
P-4	Kitchen Sink
P-5	Electric Water Cooler (Handicapped)
P-6	Service Sink
HB	Hose Bibb
WH	Wall Hydrant
FD	Floor Drain w/trap primer

3.4.9 Energy Monitoring and Control System (EMCS)

The HVAC systems shall utilize direct digital controls and shall be connected to the base EMCS network (HSQ system) to allow for remote monitoring and control at the base EMCS master control room. See paragraph 3.5.5(8), Telecommunication Systems, for additional information on EMCS.

3.4.10 Seismic Protection

All mechanical equipment and piping shall be provided with anti-sway and support devices. The requirements for seismic protection measures described in this section shall be applied to mechanical/electrical equipment and systems specified herein, and shall be in accordance with TI 809-04 using criteria set forth in paragraph 3.3.1(3). Lateral support against earthquake induced forces shall be accomplished by positive attachments without consideration of friction resulting from gravity loads. Support shall include but not be limited to piping, ductwork, terminal boxes, heat exchangers, boilers, AHU's and water heaters. Sway bracing systems shall be designed by the designer of record.

3.4.11 Handicapped Requirements

Fixtures noted in the plumbing fixture table above shall be provided for wheelchair access. Public restrooms on the first floor shall be configured for wheelchair use.

3.4.12 Fire Protection Requirements (See also section 3.6, Fire Detection Requirements)

3.4.12.1 Design Reference Documents:

Uniform Building Code (UBC), Latest Edition 1997.

National Fire Protection Association (NFPA) Latest Edition of the following:

NFPA 10 Portable Fire Extinguishers 1998

NFPA 13 Installation of Sprinkler Systems 1999

NFPA 17A Wet Chemical Extinguishing Systems 1998

NFPA 70 National Electrical Code 1999

NFPA 72 National Fire Alarm Code 1999

NFPA 90A Installation of Air Conditioning and Ventilation Systems 1999

NFPA 90B Installation of Warm Air Heating and AC Systems 1999

NFPA 101 Life Safety Code 1997

NFPA 170 Symbols for Architectural and Engineering Drawings 1999

MIL HDBK 1008C Fire Protection

Laboratory Publications:

Underwriters Laboratories (UL)
Factory Mutual Approval Guide
National Electrical Manufacturer's Association
Institute of Electrical and Electronic Engineers
American National Standards Institute

3.4.12.2 Design Requirements.

(1) Water Supply. Water for fire protection will be taken from the base water distribution system in accordance with **paragraph 3.1.3 Site Design, subparagraph (3) Water Distribution.**

(2) Fire Suppression System. The entire facility shall have an automatic sprinkler fire suppression system incorporating a wet pipe system for heated spaces. In all corridors and living spaces, install flush-mounted sprinkler heads. System design shall be in compliance with NFPA 13 and MIL-HDBK-1008C, and designed by a fire protection engineer. Fire Department Hose connections outside the building are required. Sprinkler heads shall be located to ensure full coverage and prevent water spray from being blocked by other objects.

(3) Submittal Review. The fire sprinkler, and fire alarm system shall be designed by a Fire Protection Engineer (as required by MIL HDBK 1008C), including actual piping design for sizing, head layout, and hydraulic calculations. The hydraulic calculations and complete fire protection design shall be submitted for review prior to installation (**see Section 00810 Design-Build Contract Procedures).** Prior to design the Contractor shall perform pressure and flow tests on the existing water system.

(4) Extinguishing Systems. No gas extinguishing systems using Halon or similar materials shall be used.

(5) Fire Extinguishers and Cabinets. Fire extinguisher cabinets, 200 mm X 200 mm X 710 mm (8” X 8” X 28”), shall be semi-flush or flush mounted in finished areas. Cabinets shall be accessible by a door (full glass type) with a handle. No break-glass or key locked cabinets are to be used. Provide the fire extinguishers for the cabinets. Also provide surface mounted fire extinguishers with appropriate mounting brackets in basement storage area and mechanical room. The locations of extinguishers shall be as approved by the base fire marshal. All extinguishers shall be 10 pound ABC dry chemical extinguishers.

(6) Sprinkler Fire Suppression Systems. A backflow preventer shall be installed in accordance current National Standard Plumbing Code requirements. An electronic water flow switch vane (paddle) type shall be installed for the purpose of indicating a fire condition and be adjustable to delay the signal to the fire alarm panel up to one minute and shall be an addressable-type compatible with fire alarm panel. Water flow pressure switches and retard chambers are not required. System shall indicate an alarm and trouble condition on both the fire alarm control and the remote fire alarm panels. All piping shall be steel. A 25 mm (one inch) inspection test connection shall be provided at the most remote branch line and a 50 mm (2-inch) drain shall be provided at the riser and piped to the outside. Post indicator valves shall be supervised by means of a signal sent to fire alarm control panel. The Contractor shall provide an audible water gong on the fire sprinkler system to be heard outside of the building.

(7) All heated areas shall be protected with a wet pipe fire sprinkler system. Sprinkler system testing and commissioning shall be coordinated with the Contracting Officer.

3.4.13 Training

Training and instruction shall include adjustment, operation, and maintenance; including pertinent safety requirements of the equipment and systems specified. Training shall require a minimum of 8 hours. The training shall be oriented specifically to the systems installed. Detailed training manuals shall be provided and training presentations shall be video taped.

3.4.14 Testing and Balancing

(1) General. The facility shall be essentially complete prior to testing. Doors and windows surrounding each area to be balanced shall be closed during testing and balancing operations. Air systems shall be complete and operable. Exhaust fans shall be operational. Hydronic systems shall be complete and operable with balancing valves, flow meters, coils, pumps, piping and control components in place. If a system cannot be adjusted to meet the design requirements, the Contractor shall promptly notify the Contracting Officer in writing. Each system shall be adjusted until all flow quantities are within plus ten percent and minus zero percent. Air balancers shall be nationally certified. Representatives from design firm(s) shall be present for commissioning.

2) General Balancing Methods. Throttling losses shall be limited. Air flow adjustments shall be made by first adjusting the fan speed to meet the design flow conditions. Fan speed adjustment may not be required for fan motors which are less than one horsepower, or if throttling results in no greater than an additional 0.25kW (1/3 horsepower) draw above that required if the fan speed were adjusted. Flows and pressures shall be checked in all main risers and supply ducts at all supply, exhaust and return fan discharges. All valves and control components shall be open or set as required for maximum system flow. Pumps shall be checked for proper speed. Pump activation signal and deactivation signal valves shall be verified. Pump motor current shall be checked at maximum design flow. In addition to the requirements for specific systems, flows in piping, coils and other hydronic system components shall be balanced. Pressure taps on all pumps shall be made at the pump suction and discharge. Summer-winter systems shall be balanced in the summer mode of operation. Following completion of the summer-mode balancing, equipment used for winter operation shall be balanced. Following final acceptance of certified reports by the Contracting Officer, the setting of all HVAC adjustment devices including valves, splitters, and dampers shall be permanently marked by the testing and balancing engineer so that adjustment can be restored if disturbed at any time. Provide auxiliary (simulated) loads if required for fill testing.

(3) Acoustics. After the systems are properly tested, adjusted and balanced, sound levels shall be checked in accordance with the applicable provisions of AABC MN-1. Octave-band analysis and noise-criteria curve data shall be recorded on forms shown in AABC MN-1. All occupied areas including living spaces, corridors, and public rooms, shall be verified to be within sound levels acceptable within comparable commercial facilities. Any areas not meeting the requirements shall be clearly indicated on the form and an explanation of all discrepancies shall be provided in test report.

3.4.15 Commissioning Team and Checklists

(1) General. The Contractor shall designate team members to participate in the pre-commissioning checks and the functional performance testing specified herein. In addition, the Government will be represented by a representative of the Contracting Officer, and the Using Agency. The team members shall be as follows:

Designation	Function
Q	Contractor's Chief Quality Control Representative
M	Contractor's Mechanical Representative
E	Contractor's Electrical Representative
T	Contractor's Testing, Adjusting, and Balancing Representative
C	Contractor's Controls Representative
D	Contractor’s Mechanical Designer

O	Contracting Officer's Representative
U	Using Agency's Representative

Each checklist shown in Specification 15995 (Appendix A) shall be completed by the commissioning team. Acceptance by each commissioning team member of each pre-commissioning checklist item shall be indicated by initials and date unless an "X" is shown indicating that participation by that individual is not required. Acceptance by each commissioning team member of each functional performance test checklist shall be indicated by signature and date.

(2) Pre-Commissioning Checks. Pre-commissioning checks shall be performed for the items indicated on the checklists in Specification 15995 (Appendix A). Deficiencies discovered during these checks shall be corrected and retested in accordance with the applicable contract requirements.

(3) Functional Performance Tests. Functional performance tests shall be performed for the items indicated on the checklists in Specification 15995 (Appendix A). Functional performance tests shall begin only after all pre-commissioning checks have been successfully completed. Tests shall prove all modes of the sequences of operation, and shall verify all other relevant contract requirements. Tests shall begin with equipment or components and shall progress through subsystems to complete systems. Upon failure of any functional performance test checklist item, the Contractor shall correct all deficiencies in accordance with the applicable contract requirements. The checklist shall then be repeated until it has been completed with no errors.

3.4.16 Malmstrom Air Force Base Unique Mechanical Design Requirements

See the following two pages for a list of mechanical design requirements unique to Malmstrom Air Force Base.

BASE UNIQUE MECHANICAL DESIGN REQUIREMENTS LIST

Standard - Technical criteria specific to Malmstrom AFB and our climate for inclusion in our designs.

Results - Significant reduction in maintenance hours and projects that work well at Malmstrom AFB.

Design everything with maintenance ease and assess the priorities (space requirements). List salient features of all equipment specified, compatibility of products and materials. Reference appropriate codes - most current edition.

1. Heat Exchange Gasket Type - spiral flex
2. Design Heat Exchanger - Modulating valve located on return side of loop and check valve included.
3. Heating coil use Three-Way Modulating Valve located on the supply side of coil.
4. HTHW Valve Packing - Marlo 333 or approved equal.
5. HTHW Valve - Bellows type 2 inch or less (500 degrees F of 500 psi HW).
6. HTHW Valve - 2 inch larger gate, 500 degrees F 500 psi HW.
7. Heating Pumps - 2 required.
8. Not applicable.
9. Cooling Coil use three way modulating valve on supply side of the coil.
10. Circulating Pumps to be located in the Mechanical Room.
11. Pumps - Need isolation valves on inlet and outlet.
12. Factory Rep Startup of all Major Mechanical Systems (written checklist to be provided in the required format).
13. Training for each System - by professional instructor and videotaped, minimum of 4 hours.
14. Direct Digital Controls manufactured by STAEFA, sole source justified.
15. Energy Management Control System compatible with HSQ.
16. EMCS - Thorough list of equipment required.
17. Control Schematics - Laminated and mounted in Mechanical Room.
18. Fiber Optic cable to be loose-tube gel - filled compatible with Siecor.
19. Not applicable.
20. Not applicable.
21. Hot Water Heaters - High altitude, quick recovery, high efficiency.
22. Boilers - High altitude, high efficiency.
23. Utility Gas Lines - Use polyethylene valves.
24. Utility Gas Lines - 36" depth, plastic marking tape and metal tracing wire line.
25. Utility Gas Lines an anodeless riser assembly is required.
26. Not applicable.
27. Copper Pipe Joints - All hidden joints to be SILFLOSS not soft solder, random joints may be inspected by destructive testing.
28. Glycol Solution - Protect to -30 degrees F using propylene glycol.

29. Pipe - Flanges or unions after isolation valves and before coils, fin tubes, etc.
30. Pipe and Mechanical equipment shall be braced for earthquake protection.
31. Plumbing - Do not put on outside wall because of freezing potential.
32. Heating and Chilled Water - use propylene glycol system.
33. Protect and Support all Piping Properly, especially the Refrigerant Piping.
34. All Gauges Readable from the Floor Level.
35. Access panels for all valves on unitary heating systems in buildings.
36. Fan Coil - Access to change filters.
37. Water Treatment - Use demineralized water, inhibitor and glycol match to existing chemicals for compatibility.
38. Motors - Thermal protectors for overload with sealed bearings.
39. Make Up Air Units - Not to inlet snow.
40. Not applicable.
41. Not applicable.
42. Flex Duct - Use high quality plastic type; radius not to exceed minimal diameter allowed by SMACNA.
43. Check for CFCs in Project.
44. Check for Asbestos.
45. AHUs handling outside air: Use heating water loop temperature reset to ensure adequate flow is maintained at all times. Design temperature difference not to exceed 11 degrees Celsius (20 degrees Fahrenheit).
46. Design heating equipment for an outside temperature of –29 degrees C (--21 degrees F).
47. Use Low Ambient Temperature Cutoffs for Condensers.
48. Not applicable.
49. Provide Utility Meters for gas, electricity, BTU's from High Temperature Hot Water and Water.
50. Renovation - Engineers to verify utility connections, size, type, psi location, etc.
51. Coordinate Designs with other Design Discipline.
52. Mixed Air portion of the AHU requires Low Temperature Limits to prevent coil freezing.
53. Not applicable.
54. Chemical Feeders to be Bypass Pot Feeders.
55. Not applicable.
56. Electrical Disconnects Labeled to Match Equipment
57. Breaker Schedule - Have EE verify to equipment.
58. Phase Protection of Equipment - Use high quality type.
59. Fire Suppression System must be designed by a registered Fire Protection Engineer.
60. Fire Detection Transmission System by Monaco or approved equal.

3.5 ELECTRICAL REQUIREMENTS

3.5.1 Design Criteria.

The following documents will be used as design criteria:

ANSI/IEEE 141	IEEE Recommended Practice for Electric Power Distribution for Industrial Plants
ANSI C2-1997	National Electrical Safety Code
EIA/TIA TSB 36	Technical Systems Bulletin Additional Cable Specifications for Unshielded Twisted Pair Cables
EIA/TIA TSB 40	Additional Transmission Specifications for Unshielded Twisted Pair Connecting Hardware
EIA/TIA 568A	Commercial Building Telecommunications Wiring Standard
EIA/TIA 569	Commercial Building Standard for Telecommunications Pathways and Spaces
EIA/TIA 607	Commercial Grounding and Bonding Requirements for Telecommunications
IES	Lighting Handbook
MIL HDBK 1008C	Fire Protection for Facilities
NFPA 70	1999 National Electric Code
NFPA 72	1999 National Fire Alarm Code
NFPA 101	1997 Life Safety Code
NFPA 780	Lightning Protection Code
TM 5-811-1	Electric Power Supply and Distribution
USAF/LEE ETL 87-9	Engineering Technical Letter (ETL) 87-9: Prewiring, Dated 21 Oct 87
USAF ETL 91-6	Engineering Technical Letter (ETL) 91-6: Cathodic Protection, Dated 3 July 91
USAF ETL 94-5	Engineering Technical Letter (ETL) 94-5: Fire Protection Engineering Criteria and Technical Guidance - Emergency Lighting and Marking of Exits

Electrical design and installation shall comply with the Malmstrom Air Force Base Electrical Distribution Standards, Architectural Compatibility and Engineering Standards, and other applicable standards. Equipment shall conform to the requirements of the National Electrical Manufacturers Association and Underwriters Laboratories, Inc.

Underground lines/duct shall be installed in accordance with the guidance provided herein and in outline specification 02221 "Excavation, Filling and Backfilling for Utility Systems" of Section 00890 Outline Specifications.

3.5.2 Electrical Service

(1) General. Power distribution on the base is 12470 volts, 3 phase, 4 wire. Primary electrical service is to be to underground from the sectionalizer located in front of the '97 dorm building 655, on First Avenue in the area shown on **Plate E-1** Appendix B. Pad mounted, tamper-proof compartmental transformers shall be placed adjacent to facilities as required, but no closer than 8 meters.

(2) The following criteria pertains to the general exterior service design requirements:

(a) Secondary feeders from transformer to facility shall be copper, 600V, type USE for service entrance cable, installed in underground concrete encased duct.

(b) All underground High Voltage duct banks shall be concrete encased and shall include one spare for each type of service, i.e., Power, Communications, etc. Provide conduit separation per ANSI C2.

(c) Install High Voltage duct bank along First Avenue. High Voltage duct banks require at least 4-4 inch conduits. Provide all spare conduits and inner-ducts with pull cord.

(d) For all 60 Hz power circuits (12.47 KV, and 120/208 V), provide 1 spare conduit of equal size for each conduit installed.

(e) All high voltage (12.47 KV) taps/connections are to be made on above ground sectionalizers, or loop-fed pad-mount transformers with appropriate bushings. No high voltage taps shall be made in handholes or manholes.

(f) Primary riser and feeders shall be 15KV. The 15KV conductors to be installed under this contract shall be manufactured by Cablec, or approved equal and shall meet the following specifications.

1. The cable shall be Unishield, EPR, 15KV power cable, #AP 19161, single copper conductor with Class B stranding, extruded strand shield, ethylene propylene type insulation (133% level), and corrugated copper shielding drain wires.

(g) Neutral conductors, cable shields, and all other noncurrent-carrying metallic parts of equipment shall be grounded. Ground resistance of not greater than 25 ohms shall be provided.

(h) Label all cables, where they come from and where they go, with embossed tags.

(i) All Primary and HV connections shall be loadbreak type rated 200A.

(j) All pad mounted equipment shall be factory painted in accordance with Base standards, Federal Standard 595a No. 23578, Antique Linen. Provide minimum 100 mm thick concrete pad on gravel base. Pad shall extend a minimum of 300 mm beyond the footprint of installed equipment. Provide a four point counter poise ground grid consisting of #1/0 awg copper conductor with a 10 foot long ¾ diameter copper clad ground rod installed at each corner. The transformer shall be bonded to the counterpose at two opposite points.

(k) Pad mounted transformers shall be 3 phase, delta to wye with grounded neutral, dead front, loop feed, oil immersed type, loadbreak group operated switch, surge arresters, and dry-well-mounted current limiting fuses. Service transformer shall have two 2 1/2% taps above and below rated voltage. Provide low Z% transformers where short circuit currents permit. Visually screen all above ground electrical equipment from major circulation routes and common areas. Transformers shall have copper windings. Transformers shall be equipped with a kill switch on the primary side of the transformers.

(l) All cabinets shall be provided with padlock hasps.

(m) Aluminum shall not be used in contact with earth or concrete.

(n) Duct lines shall be concrete encased. Duct line markers shall be provided at the ends of long duct line stub-outs or for other ducts whose locations are indeterminate because of duct curvature or terminations at underground locations. In addition to markers a brightly colored plastic tape, not less than 75 mm in width and suitably inscribed with a continuous metallic backing and corrosion resistant metallic foil core to permit easy location of the duct line, shall be placed approximately 300 mm below finished grade.

(o) Control wiring and communications wiring shall not share the same conduits, raceways, or enclosures as electrical power wires (120 Volts nominal or larger).

(3) Provide a new digital watt-hour meter for the new dormitory building. The meter shall provide simultaneous measurements for current, voltage, and power parameters. Meter shall be cumulative type kilowatt demand register with 30 minute interval. Meter shall be installed as part of the main distribution panel and connected to base EMCS.

(4) Motors. All motors shall be high efficiency types and use derated values for supply voltages, i.e., for a 480V service use a 460V rated motor; for 208V service provide a 200V motor. In addition, all motors should have a safety disconnect switch mounted in a clearly labeled and accessible location. Motors over 10 hp should have under-voltage, phase loss, and phase reversal protection. For induction motors 10 hp and larger provide power factor correction capacitors to correct power factor to .90.

(5) Provide engine block heater receptacles for the parking lot. The design of the block heaters and posts shall be coordinated with the Base.

3.5.3 Lighting

(1) General. Lighting levels shall be designed in accordance with Illumination Engineering Society (IES) standards except as noted herein. All lamp fixtures shall be energy efficient as per Energy Star requirements, but lamp life shall be specified.

(2) Interior Lighting. Lighting fixtures shall be fluorescent and/or incandescent. Switching shall be provided for each individual area and room throughout the facility. Fluorescent tube fixtures shall be rapid or instant start with matching ballast. The use of low mercury content lamps is encouraged. Provide overhead incandescent fixtures in the living/bedroom area to provide a ‘residential’ feel. Kitchen may be provided with fluorescent fixtures. The vanity areas shall be treated in a similar fashion as living/bedroom areas to achieve “residential” feel. Provide infrared heat lamps in the bathroom/shower area. Walk-in closets shall be lit. Corridors shall be lit in such a manner so as to avoid the ‘tunnel’ effect (i.e., provide wall sconces for night lighting and turn off lighting over entry doors at a designated time in the evening). High quality fixtures and sophisticated lighting design enhancing the positive features of the interior spaces are desirable. Lighting in commons type rooms, TV rooms, Laundry, rest rooms, and the basement storage area shall be activated by an occupancy sensor.

(3) Wiring shall consist of insulated copper conductors installed in rigid metallic conduit or metallic (EMT) tubing systems. Exposed conduit is permitted only in unfinished areas and shall be installed a minimum of 1200 mm above the finish floor. Provide a green jacketed ground wire in all conduits.

(4) Exit and Emergency Lighting. Exit lights (LED battery type with red letters) and emergency lights shall be provided as required by NFPA 101, Life Safety Code. Allow for continued functioning for a minimum period of 90 minutes. Wall mounted battery back-up type fixtures are not acceptable.

(5) Exterior Lighting. The exterior lighting system shall consist of high pressure sodium fixtures, Kim No. EDG401 100W, or approved equal for walkways; Kim, No. EKG501 250W, or approved equal for parking lot. Parking light fixtures shall be rectangular ‘shoe-box’ fixtures with dark bronze finish. Parking light poles shall be 10 meters high, square non-tapered aluminum with a dark duranodic bronze finish. Walkway

light poles shall be 4 meters high, square non-tapered aluminum with a dark duranodic bronze finish. Poles shall have vibration dampeners, and be designed for a wind velocity of 145 km/h at the base of the pole, for a wind gust factor of 1.3, and for the height and drag factors recommended by AASHTO LTS-2. Fixtures shall be provided at the exterior doors (35 watt minimum lamp size). Site and building mounted fixtures shall be controlled by a photo cell. Low voltage control panels for site lighting shall be controlled with a photocell and timer. All exterior overhead lighting circuits shall be placed underground in direct buried schedule 80 PVC.

3.5.4 Building Power

(1) The Main Distribution Panel (MDP) shall be a free standing switchboard with ground bus and copper bus bars. Main breaker shall be provided. Meters and CT's/PT's shall be provided with the main switchboard. All Branch Circuit Panelboards that are not in the same room as the MDP whall have main breakers. Branch circuit panelboards shall be bolt-on circuit breaker type and shall have copper bus bars. Minimum size overcurrent device for branch circuits shall be 20 amps. Ensure proper coordination and withstand ratings for all overcurrent protection devices. Phase loading shall be balanced to within 10% at all panelboards.

(2) All distribution equipment and services shall be sized to allow 20% growth.

(3) One duplex 110 volt/20 amp receptacle shall be provided every 3000 mm (12') along walls, within 1800 mm (6') of each door and for any wall space 600 mm (2') or more in width. Receptacles shall be coordinated with the furniture locations. Receptacles shall be mounted 450 mm (18") above finished floor, and switches shall be mounted 1200 mm (48") above finished floor. Ground fault protection shall be provided where required by codes. Provide receptacles for water coolers.

(4) Wiring shall consist of insulated copper conductors installed in rigid metallic conduit or metallic (EMT) tubing systems. Exposed conduit is permitted only in unfinished areas and shall be installed a minimum of 1200 mm above the finish floor. Provide a green jacketed ground wire in all conduits.

(5) Wiring, conduits, switches, disconnects and controllers shall be provided for all equipment requiring electrical power.

(6) Kitchen. Each kitchen will require power for a garbage disposal, electric range, built-in microwave oven with integral ducted exhaust, and refrigerator. All counter receptacles installed within 1800 mm of sink shall be duplex ground fault interrupt (GFI) type. A receptacle outlet shall be installed at each wall counter space 300 mm or wider. Each 1200 mm of counter space shall have a receptacle and no point along the wall line shall be more than 600 mm from a receptacle.

(7) Bathrooms. Provide a duplex GFI convenience outlet at each vanity. Receptacles in each of the bathrooms are to be connected to 20 amp dedicated circuits per NEC 210-11(c)(3).

(8) Common Area Kitchenette. Power shall be provided for a garbage disposal, electric range, exhaust hood, large microwave oven, and a full size refrigerator/ freezer. Provide receptacles to service countertop surfaces as listed in item 6, kitchen above.

(9) A separate main electrical room shall be located on the first floor with smaller distribution closets located on the second and third floors. The main electrical room shall be accessed from the exterior of the building. Adequate ventilation shall be provided.

3.5.5 Telecommunications Systems

(1) CATV. AT&T currently has the franchise for the Base. The cable company is responsible for all exterior work but the Prime Contractor for this project shall coordinate all exterior work, and building connections with the cable company. The contractor shall provide faceplate and connector- (two in each residential module living/bedroom area - total of four for each module - and in each television and video room), lockable enclosures, and building entrance per AT&T Cable's specifications. The contractor shall provide all terminations and cable runs within the building. The contractor is responsible for providing a complete and usable system.

(2) A communications equipment room (CER) is required for this facility. The CER serves as the entrance facility for all incoming communications ducts and as the main location for communications equipment. Provide minimum two 20 amp dedicated circuits. The room should also have normal receptacles on all walls in accordance with the NEC and/or local codes. Provide as a minimum a 17mm thick wall to wall plywood backboard no greater than 300mm above the finished floor to no less than 2100mm above finished floor. Provide a single point ground for all communications equipment. Provide a 150mm x 600mm copper ground plate installed 2100mm above finished floor. Ground plate with #1 cu wire or larger. The resistance to ground must not exceed 25 ohms. All communications closets and rooms shall be interconnected with conduit or cable trays.

(3) Provide a telephone closet on each floor in accordance with EIA/TIA 568A and 569 standards.

(4) All telecommunications and CATV wiring shall routed in metallic (EMT) tubing systems or cable trays. Exposed conduit is permitted only in unfinished areas and shall be installed a minimum of 1200 mm above the finish floor.

(5) Communications Outlets. Each living/sleeping area shall be provided with two dual outlets (total of four jacks per module). Each outlet consists of one 8-pin modular jack outlet and one 6-pin modular. The two outlets in each room shall be connected in parallel for a total of two homerun communication circuits to the CER, or a total of four homeruns from each module. Provide category 5 cable for all jacks and from each communication circuit to the telephone backboard in a cable tray. Office and administrative areas shall be provided with communication outlets consisting of (4) RJ-45 jacks, 2 labeled 'voice' and 2 labeled 'data'. In office and administrative areas provide one communications outlet adjacent to each power outlet. Provide modular telephone jacks for pay phone and base phone on the first floor in the lobby near the office. On the second and third floors provide a minimum of three modular wall phone jacks, 1420mm above finished floor, and distributed evenly through the hallway for base phone service. Install one phone jack in the game room for base phone service.

(6) Panels. Provide rack mounted panels appropriate for category 5 cabling. Provide for minimum 20% spare/growth capacity. Contractor is to provide 66 type distribution termination blocks. The base or the base's phone contractor will pull all communication cables into the building through Contractor provided conduits and the base or phone contractor will make the cable terminations. All testing will be done in accordance with the manufactures procedures. The contractor is responsible for all testing within the facility.

(7) Incoming Service. Provide protector blocks with gas-tube protectors and install new category 5 connector blocks at backboard. At backboard install 150mm x 600mm copper ground plate at 2100 mm above finished floor. Provide communications grounding to the building ground IAW NEC.

(8) Exterior Communications. The exterior communications will be supplied and installed by the base and US West. The Contractor is responsible for coordinating with the base and US West for all required site communications work. The Contractor is responsible for providing a duct bank and manhole system from building 655 to this project in accordance with the Electrical Site plan. This concrete encased duct bank will consist of 4-4" PVC ducts, one of the 4" ducts will have 2-2" innerducts.

(9) Energy Management and Control System (EMCS). This facility will be tied into the base fiber optic EMCS system. The contractor shall be responsible to provide all interior, and exterior EMCS work using components that are compatible with the base's STAEFFA system. The contractor shall also be responsible for installing the communications duct bank and pulling the exterior fiber optic cable from the locations indicated on the Electrical Site plan, to the building. The contractor is responsible for a completely functional system.

3.5.6 Cathodic Protection, IAW ETL 91-6

(1) The building will be heated using the base High Temperature Hot Water

distribution system. This underground piping system will require cathodic protection from a new Impressed Current cathodic protection system, complete with rectifier located inside the Mechanical room and a new anode bed. The system shall be designed by a NACE certified Cathodic Protection Engineer. The specification for Impressed Current Cathodic Protection system 13112 is included but is not finalized. The designer is responsible for finishing this specification.

(2) The fire protection underground water distribution piping requires cathodic protection using a new stand-alone sacrificial anode system.

3.6 FIRE DETECTION REQUIREMENTS

3.6.1 Design Reference Documents:

Uniform Building Code (UBC), Latest Edition 1997.

National Fire Protection Association (NFPA) Latest Edition of the following:

NFPA 70 National Electrical Code 1999

NFPA 72 National Fire Alarm Code 1999

NFPA 90A Installation of Air Conditioning and Ventilation Systems 1999

NFPA 90B Installation of Warm Air Heating and AC Systems 1999

NFPA 101 Life Safety Code 1997

NFPA 170 Symbols for Architectural and Engineering Drawings 1999

MIL HDBK 1008C Fire Protection

Laboratory Publications:

Underwriters Laboratories (UL)
Factory Mutual Approval Guide
National Electrical Manufacturer's Association
Institute of Electrical and Electronic Engineers
American National Standards Institute

3.6.2 Design Requirements (See also Section 3.4.12 Fire Protection Requirements)

(1) Submittal Review. The fire sprinkling and fire alarm system shall be designed by a fire sprinkler system designer licensed in the state of Montana. The hydraulic calculations and complete fire protection design shall be submitted for review prior to installation.

(2) Horns and Strobes. Horn and strobe Notification devices shall be one unit. The unit shall be audio visual, horn strobe type with adjustable DBA taps and match the interior décor design of the facility. Otherwise, they shall be red in color. The

DBA level of the notification devices shall be no less than 115 DBA. All fire alarm devices and panels shall meet Underwriters Laboratory (UL) requirements listed in the UL Fire Protection Equipment Directory, Underwriters lab dated 1998. Fire alarm, detection, and tamper switches shall be connected to the addressable fire alarm panel. The base fire prevention office will determine the number of zones required or approved zoning requirement before installation. All fire alarm system installation of any kind, will be in accordance with the National Fire Protection Association. Provide additional horns/strobes in each sleeping room as close to the bath room as possible. Strobes shall produce a flash rate not to exceed two flashes per second (2 Hz) nor be less than one flash every second (1 Hz) throughout the listed voltage range of the appliance as required by NFPA 72. Exterior devices shall be weatherproof, protected by a nonferrous metal housing. Interior devices shall coordinate with wall colors.

(3) Manual Pull Stations. All fire alarm pull stations shall be red with white lettering. Devices shall be single action pull stations with keylock for reset and testing (NO BREAK GLASS OR GLASS RODS). Stations shall be noncoded, located at exits. If the 61-meter (200 foot) distance is exceeded, an additional station will be mounted at a location approximately halfway between stations.

(4) Batteries. All batteries necessary to maintain the fire alarm control system shall be gel-type lead-calcium. Batteries must carry the system for a minimum of 72 hours, and be able to drive the system for at least 15 minutes after the 72 hours.

(5) Fire Detection/Location. Heat detectors shall be installed in all mechanical rooms, stairwells, and hallways. Fixed temperature heat detectors set at 135 F degrees shall be installed in all required areas except the mechanical room shall be set at 195F.

(6) Smoke Detectors. Smoke detectors shall be installed in all common rooms and sleeping rooms. All smoke detectors shall be photoelectric type. A smoke detector shall be provided to protect the fire alarm control panel and transceiver. Smoke detectors in sleeping rooms shall be single station alarm device type operated from the fire alarm control panel power and having reverse polarity sounding capability. Smoke detection in sleeping rooms shall be connected to the fire alarm control panel and shall initiate both a local and remote alarm. Smoke detectore shall be equipped with a general tamper alarm.

(7) Fire Alarm Control Panel. The panel shall comply with applicable parts of UL 864. The panel shall be an addressable device type, style 6 or 7, with digital readout. All devices such as pull stations, detectors, flow switches, etc…, shall be addressable.

(8) Remote Fire Alarm Panel. Provide a remote fire alarm panel with digital readout. The panel shall have the capability to silence the alarm and to reset the system. Install at the main entrance vestibule. Provide all software necessary for operation of the fire alarm system.

(9) Central Station Reporting Equipment

(a) Transmitter. Monaco transmitters and antennas (or approved equal) for compatibility with Malmstrom AFB Monaco D500 system. The transmitters shall operate on a frequency of 138.925 MHz.

(b) Receiver. Monaco receivers (or approved equal) for compatibility with Malmstrom AFB Monaco D500 system.

(10) Exit Lights. Exit lights shall be installed in accordance with Life Safety Code 101.

(11) Emergency Lighting. Emergency lighting shall be installed in accordance with Life Safety Code 101. Wall mounted battery pack type emergency lighting fixtures are not acceptable.

(12) Keys. All panels and device locks shall be keyed alike. Copies of these keys will be made available by the Fire Prevention section to meet this requirement upon request of the Contractor to the Contracting Officer. Two keys will be provided for each individual locking device.

(13) Fire alarm system components and wiring shall meet specification, and performance and capabilities of initiating device and signaling line circuits of Style "D" (ref. NFPA 72). All wiring shall be color coded throughout and be type TFFN and THHN (see Table 1) and installed in metallic conduit.

TABLE 1
SIZE AND COLOR CODING OF SYSTEM WIRING

ZONE LOOP
#16 TFFN - BLUE
#16 TFFN - ORANGE
#16 TFFN - YELLOW
#16 TFFN - GREEN

HORNS
#14 THHN - BROWN (POSITIVE (+))
#14 THHN - WHITE (NEGATIVE (-))

DETECTOR POWER
#16 TFFN - RED (POSITIVE (+))
#16 TFFN - BLACK (NEGATIVE (-))

120 VAC

#12 THHN - BLACK (POWER)
#12 THHN - WHITE (NEUTRAL)
#12 THHN - GREEN (GROUND)

(14) Power for the fire alarm control panel and transmitter shall be from a dedicated branch circuit and the circuit and connections shall be mechanically protected. The circuit disconnecting means shall be accessible only to authorized personnel and shall be clearly marked FIRE ALARM CONTROL CIRCUIT.

3.6.3 Installation Requirements.

Installation of fire alarm detection systems, fire protection suppression systems, and any of the components, the technician installing this equipment must be licensed in the State of Montana and hold the proper endorsement for such installation. The license and endorsements are as follows:

SAF = Fire Alarms
SEF = Extinguishing Systems
SAFS = Special Agent Fire Suppression System

A licensed journeyman electrician can install fire alarm systems and its components if the above endorsements are stamped on their license and factory trained, or NICET II certified and factory trained in the installation of the fire alarm devices being installed. The installer must be NICET II certified and licensed with the State of Montana licensing program to inspect, test, and certify the operational condition of the system. All licensees, endorsements and NICET certifications must be presented to the contracting officers and the fire prevention officers (341 CES/CEFT) and the company name and personnel name(s) installing the system before work is to begin.

All fire alarms, fire suppression, and special agent systems must be installed IAW the appropriate NFPA Code 13, 13A, 17, 17A, 24, 25, 72, 101 and any other code reference mentioned in contract specifications, manufacturer's recommendations and construction drawings. Current licenses, endorsements, and NICET certification must be on file with the Department of Commerce, Professional and Occupational Licensing Bureau, 11 North Jackson, P.P. Box, 200513, Helena, MT 59620-0513.

All fire alarm and detection systems will come with a five year warranty and an emergency recall service (respond within 20 minutes) for repair and service when notified.

SECTION 00860 ATTACHMENT
FIGURES AND DETAILS

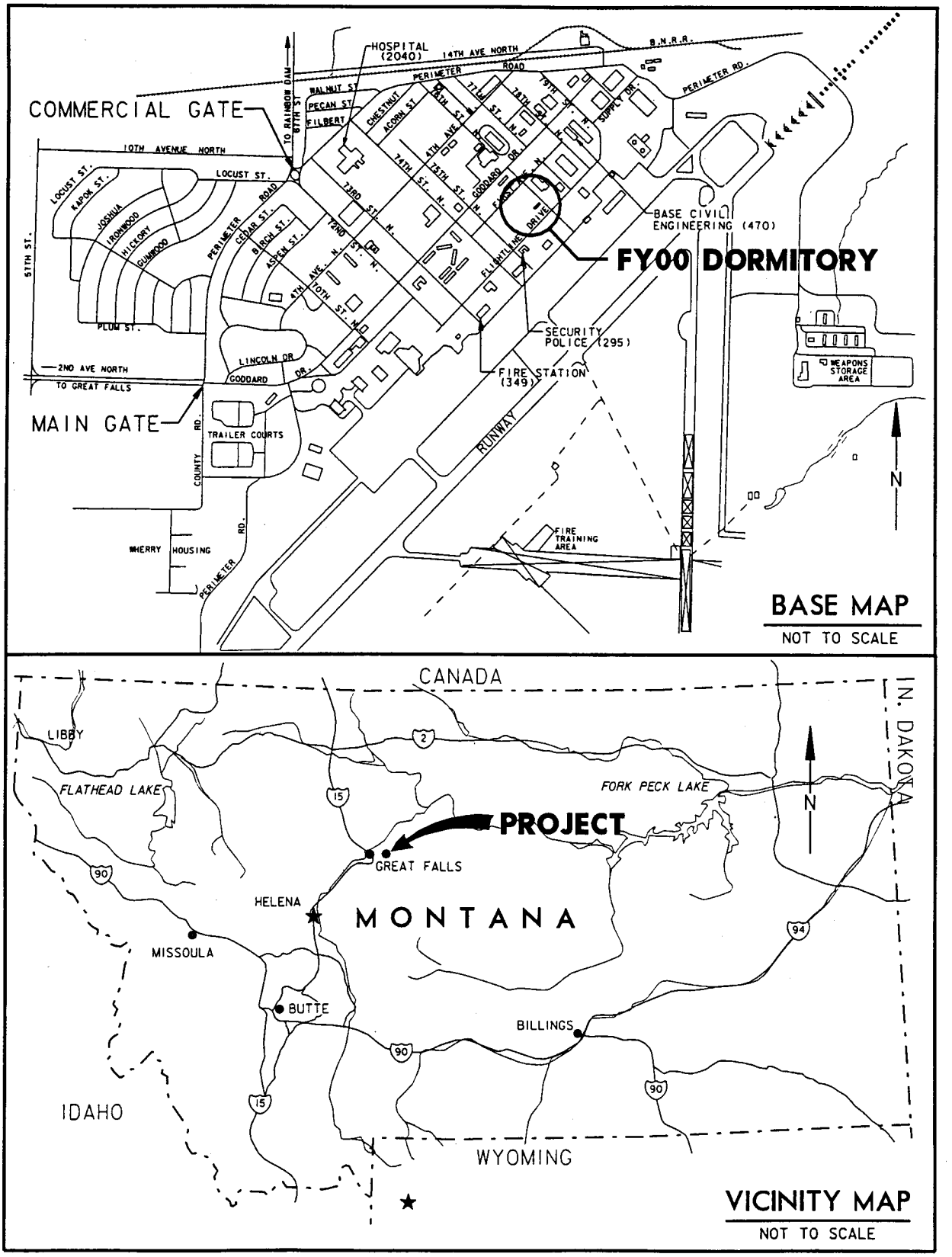

A-1

FIGURE 1–MALMSTROM AIR FORCE VICINITY AND BASE MAPS

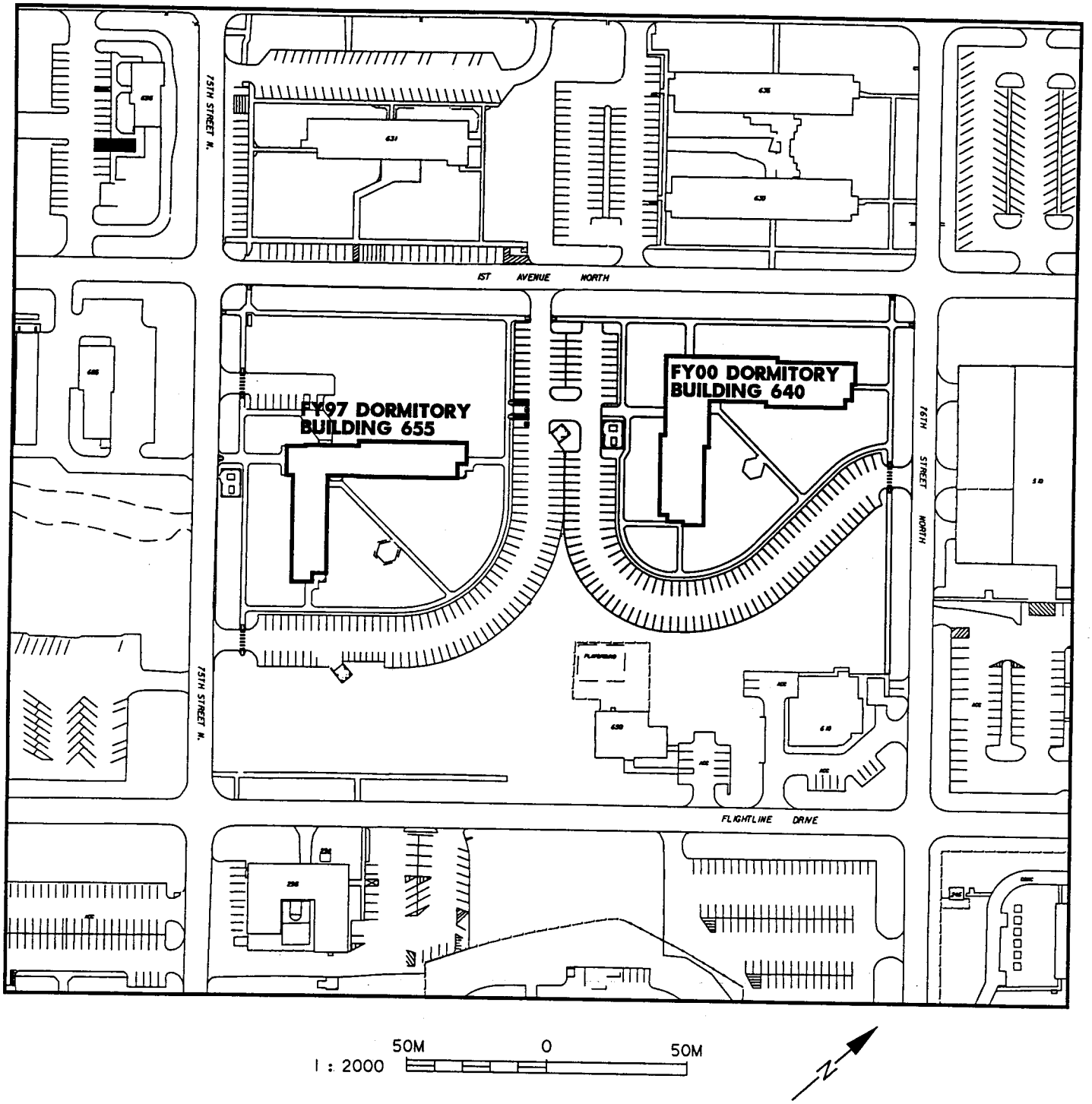

FIGURE 2 – FY00 DORMITORY SITE PLAN

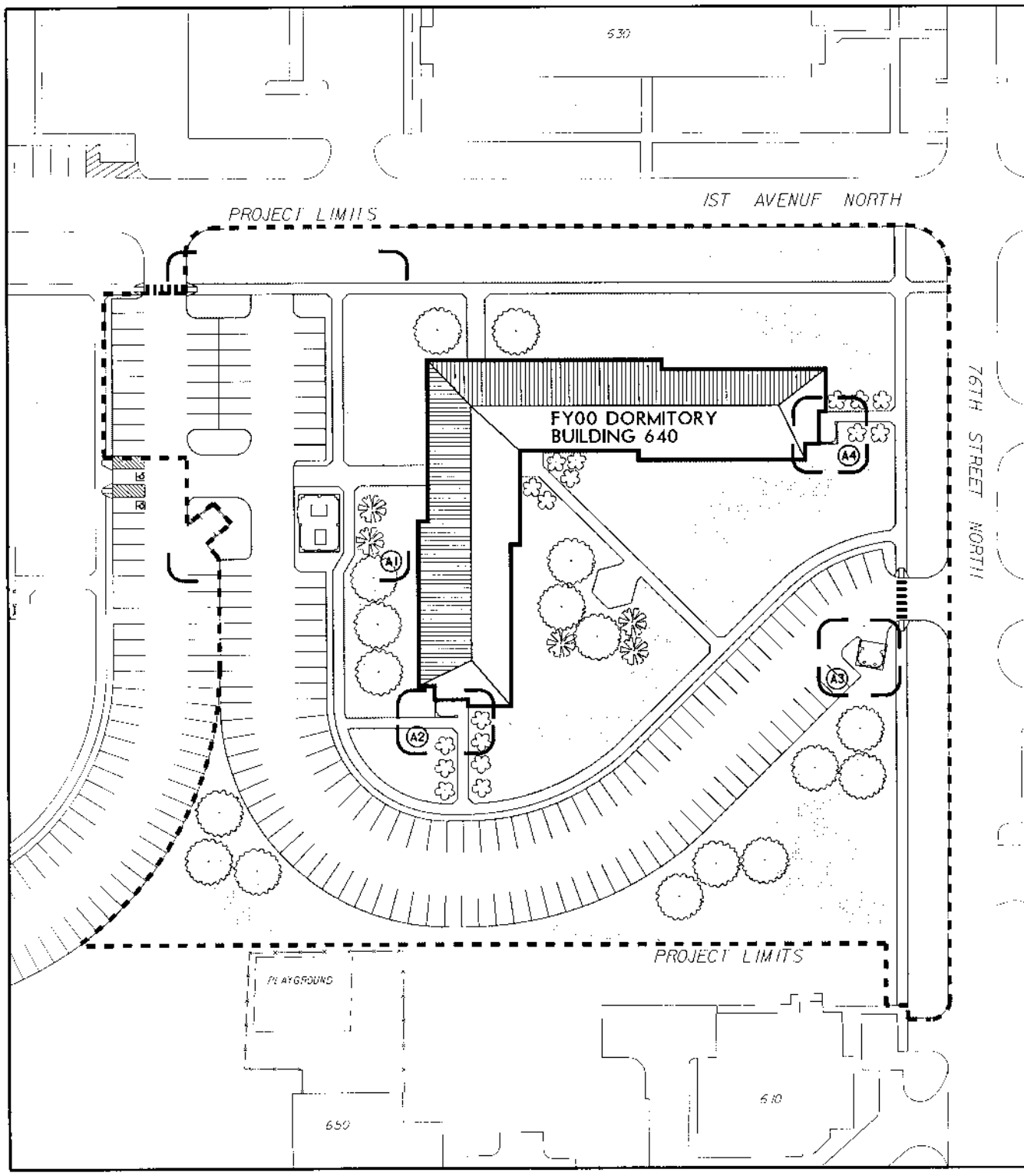

1 : 1000 20M 0 20M 40M

R0002

FIGURE 3 – FY00 DORMITORY SITE LAYOUT

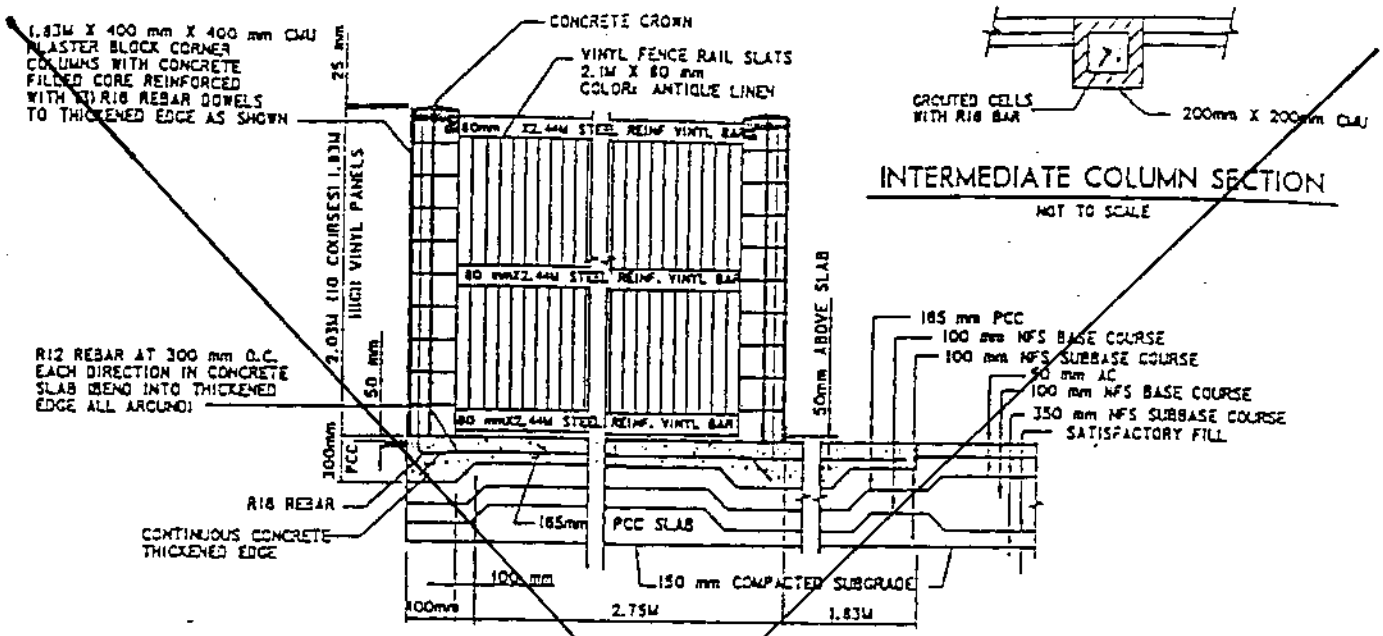

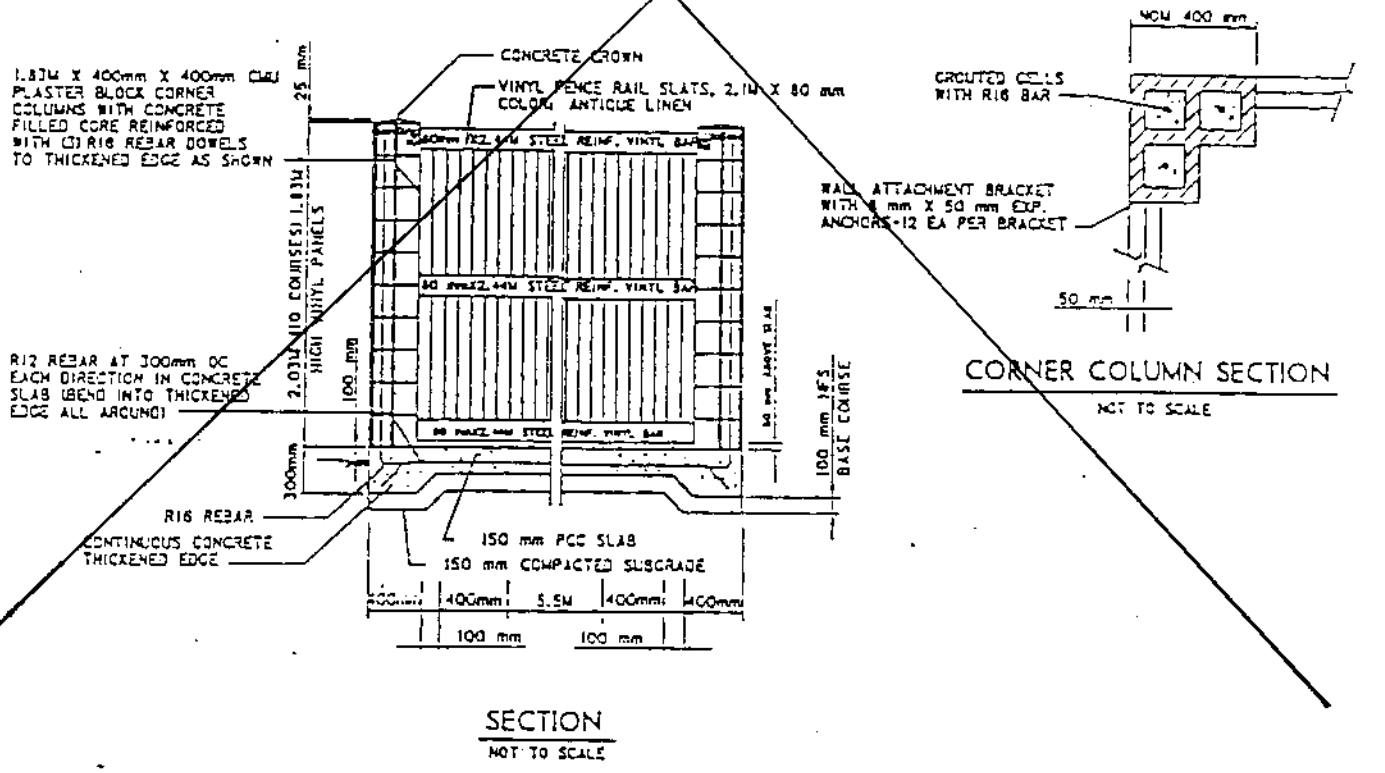

R 0002

VINYL FENCE DETAIL D 1

SEE DRAWING PLATE C1.2

MALMSTROM AFB, MONTANA

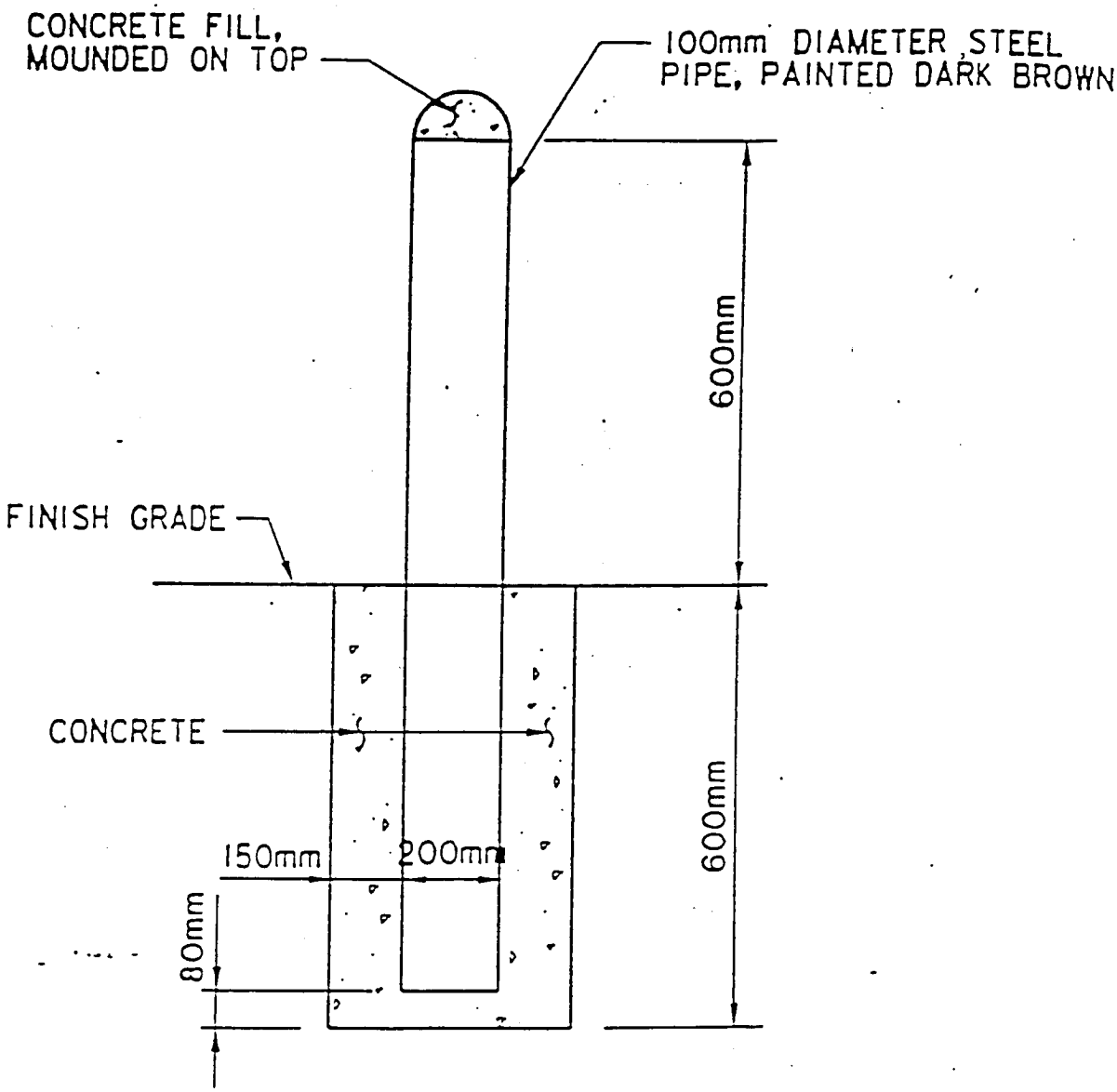

BOLLARD DETAIL

NOT TO SCALE

DETAIL D2

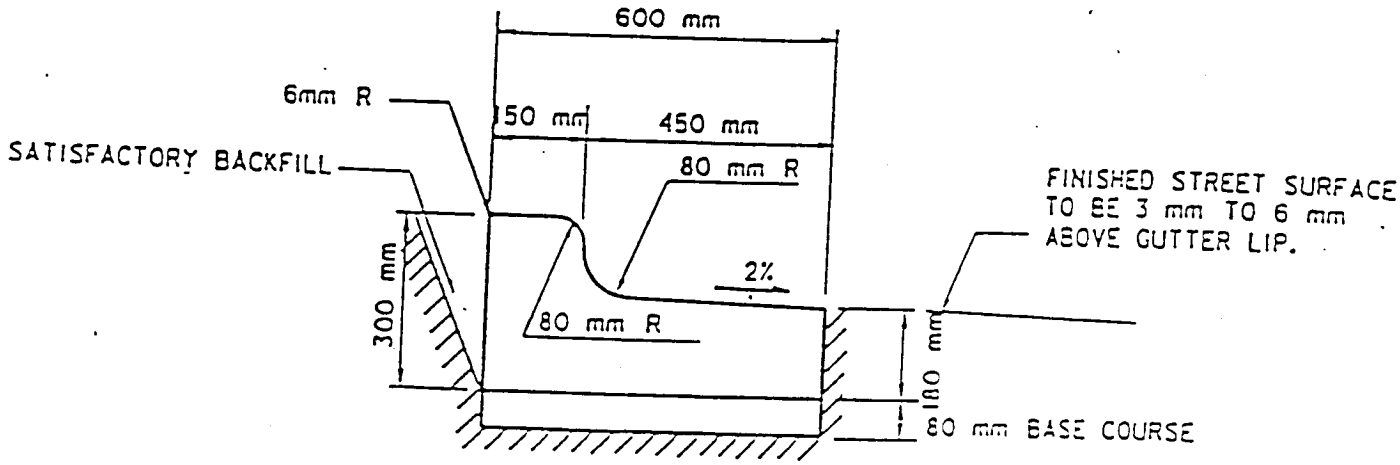

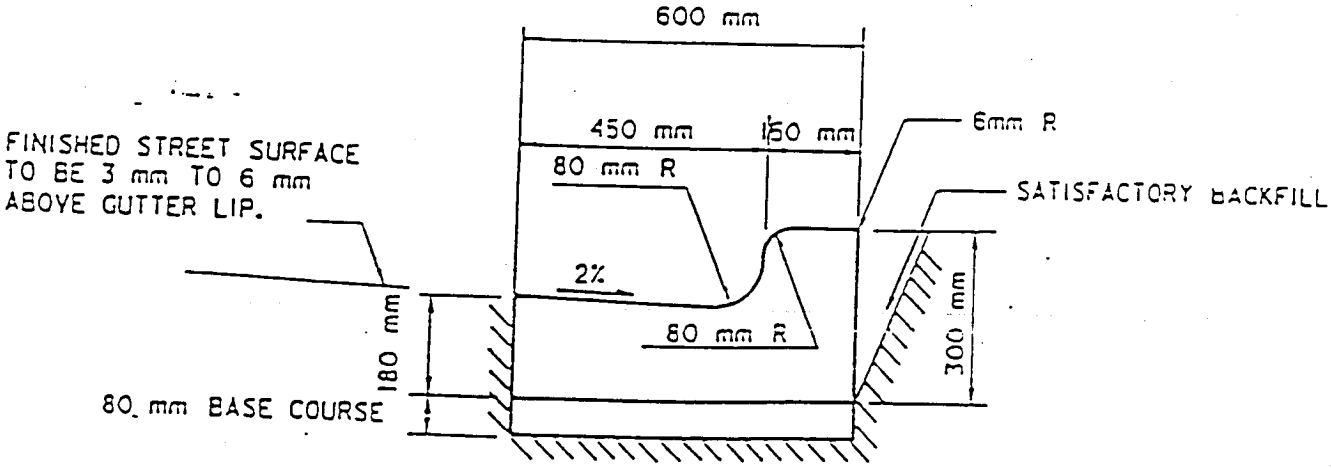

TYPICAL PCC CURB AND GUTTER DETAILS

NOT TO SCALE

DETAIL D3

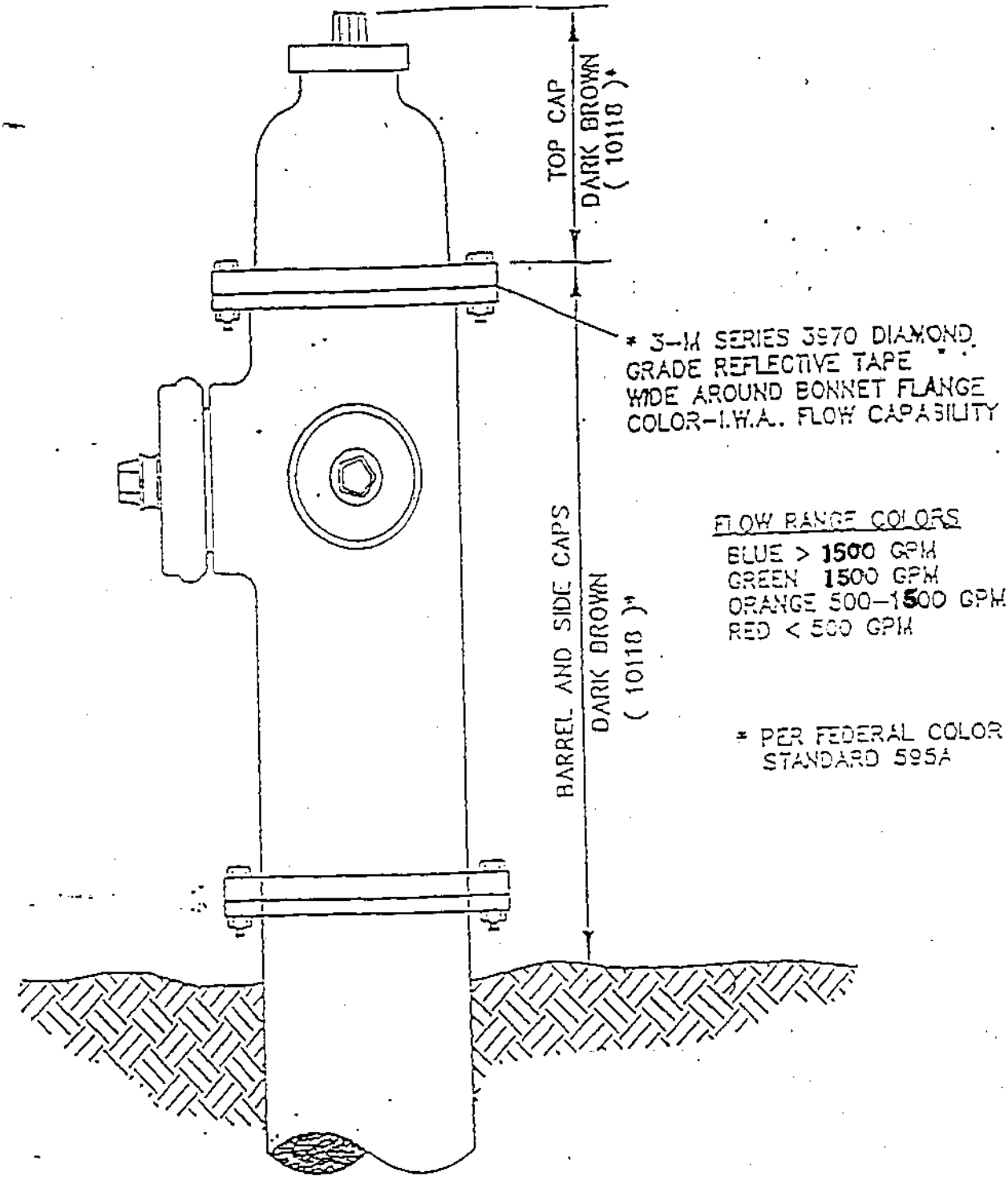

CONSTRUCTION STANDARDS

FIRE HYDRANT COLOR CODE

DETAIL D4

END OF SECTION

WAGE AND BENEFIT RATES FOR
DACA67-00-R-0214

PRINTED ON: 03/07/2000

State: MONTANA County: CASCADE Work Site: Malmstrom AFB
Extracted from: General Decision Number MT000005
with modifications through number 0
dated: 02/11/2000

The rates shown below have been extracted from the General Decision indicated, as the rates applicable to the particular location involved in this project. Basic Hourly rates shown reflect the addition of appicable Zone Pay for the zone indicated, where it is possible to make those additions with the information known at the time of solicitation release. Where additional Zone Pay adjustments may be needed (as where, for example, zone pay depends on the residence of the worker), that fact is indicated in the notes accompanying the particular rates affected. Similarly, Fringe Benefit rates shown reflect all calculations that could be made based on the information known at the time of solicitation release. Where additional Fringe Benefit adjustments may be needed (as where, for example, the rate depends on the workers' years of service), that fact is indicated in the notes accompanying the affected rates. Where additional adjustments in hourly rates may be necessary - for such things as handling hazardous materials, projects of certain dollar costs, and so on - that fact is also indicated in the notes accompanying the affected rates.

Rates for classifications not listed must be specially obtained AFTER CONTRACT AWARD by contacting Richard Hynes at (206) 764-3735 or Lynn Forbes at (206) 764-3733. Questions concerning these rates may be addressed to either of these individuals.

BRICKLAYERS
Basic Hourly: $ 18.500 Fringe Benefits: $ 6.250 BRMT0003A 04/01/1999 Zone: 0

Notes:

CARPENTERS (including Acoustical Ceiling Installation, Drywall Hanging, Non-Mechanical Batt Insulation, Installation of Gutters, Downspouts, Facia on Metal Buildings, Metal Roofs, and Siding)
Basic Hourly: $ 15.220 Fringe Benefits: $ 5.050 CARP0028F 05/01/1999 Zone: 0

Notes:

ZONE PAY (Add to listed rate, which is Zone 1 rate)

ZONE 2: 15 to 30 miles, add $0.65 to Zone 1 rate
ZONE 3: 30 to 50 miles, add $0.85 to Zone 1 rate
ZONE 4: Over 50 miles, add $1.25 to Zone 1 rate

ZONE DEFINITIONS

The hourly rate applicable shalL be determined by measuring the road miles over the shortest practical maintained route from the county courthouse in Great Falls to the center of the job (employees living within a 15 mile radius of said project shall be considered Zone 1)

CEMENT MASONS
Basic Hourly: $ 10.710 Fringe Benefits: $ 2.700 SUMT1002A 08/01/1992 Zone: 0

DRYWALL FINISHER - HAND
Basic Hourly: $ 13.160 Fringe Benefits: $ 1.980 SUMT1002A 08/01/1992 Zone: 0

DRYWALL FINISHER - MACHINE
Basic Hourly: $ 14.120 Fringe Benefits: $ 1.680 SUMT1002A 08/01/1992 Zone: 0
Notes:

ELECTRICIANS
Basic Hourly: $ 21.130 Fringe Benefits: $ 6.143 ELEC0233C 06/01/1999 Zone: 0
Notes:

GLAZIERS
Basic Hourly: $ 13.680 Fringe Benefits: $ 0.000 SUMT1002A 08/01/1992 Zone: 0

INSULATOR, MECHANICAL
Basic Hourly: $ 18.840 Fringe Benefits: $ 2.270 SUMT1002A 08/01/1992 Zone: 0
Notes:

IRONWORKERS: STRUCTURAL & REINFORCING: [Excluding installation of Gutters, Downspouts, Facia,
Metal Roofs, and Siding on metal Buildings]
Basic Hourly: $ 18.000 Fringe Benefits: $ 9.860 IRON0841C 07/01/1999 Zone: 0
Notes:

LABORERS: Asphalt Raker
Basic Hourly: $ 11.320 Fringe Benefits: $ 2.880 SUMT1002A 08/01/1992 Zone: 0
Notes:

LABORERS: Concrete Saw
Basic Hourly: $ 14.760 Fringe Benefits: $ 3.800 LABO1334A 05/01/1999 Zone: 1
Notes:

LABORERS: Fence Erector
Basic Hourly: $ 10.600 Fringe Benefits: $ 2.700 SUMT1002A 08/01/1992 Zone: 0

LABORERS: General
Basic Hourly: $ 10.760 Fringe Benefits: $ 2.700 SUMT1002A 08/01/1992 Zone: 0

Notes:

LABORERS: Hod Carrier, Mason Tender (Cement)
Basic Hourly: $ 15.100 Fringe Benefits: $ 3.800 LABO1334A 05/01/1999 Zone: 1

Notes:

LABORERS: Landscape
Basic Hourly: $ 10.600 Fringe Benefits: $ 2.700 SUMT1002A 08/01/1992 Zone: 0
Notes:

LABORERS: Power Tool
Basic Hourly: $ 14.850 Fringe Benefits: $ 3.800 LABO1334A 05/01/1999 Zone: 1

Notes:

MILLWRIGHTS
Basic Hourly: $ 16.220 Fringe Benefits: $ 5.050 CARP0028F 05/01/1999 Zone: 0

Notes:

ZONE PAY (Add to listed rate, which is Zone 1 rate)

ZONE 2: 15 to 30 miles, add $0.65 to Zone 1 rate
ZONE 3: 30 to 50 miles, add $0.85 to Zone 1 rate
ZONE 4: Over 50 miles, add $1.25 to Zone 1 rate

ZONE DEFINITIONS

The hourly rate applicable shalL be determined by measuring the road miles over the shortest practical maintained route from the county courthouse in Great Falls to the center of the job (employees living within a 15 mile radius of said project shall be considered Zone 1)

PAINTERS (EXCLUDING DRYWALL FINISHING): Brush
Basic Hourly: $ 12.520 Fringe Benefits: $ 1.480 SUMT1002A 08/01/1992 Zone: 0

PAINTERS (EXCLUDING DRYWALL FINISHING): Roller
Basic Hourly: $ 13.100 Fringe Benefits: $ 1.480 SUMT1002A 08/01/1992 Zone: 0

PAINTERS (EXCLUDING DRYWALL FINISHING): Spray
Basic Hourly: $ 15.300 Fringe Benefits: $ 2.970 SUMT1002A 08/01/1992 Zone: 0

PAINTERS (EXCLUDING DRYWALL FINISHING): Sandblaster
Basic Hourly: $ 14.720 Fringe Benefits: $ 1.690 SUMT1002A 08/01/1992 Zone: 0

Notes:

PIPEFITTERS (Including HVAC work)
Basic Hourly: $ 21.600 Fringe Benefits: $ 8.550 PLUM0030D 09/01/1999 Zone: 0

Notes:

PLASTERERS
Basic Hourly: $ 13.750 Fringe Benefits: $ 1.500 SUMT1002A 08/01/1992 Zone: 0

PLUMBERS
Basic Hourly: $ 18.550 Fringe Benefits: $ 2.770 SUMT1002A 08/01/1992 Zone: 0

POWER EQUIPMENT OPERATORS: Asphalt Paver
Basic Hourly: $ 14.350 Fringe Benefits: $ 2.890 SUMT1002A 08/01/1992 Zone: 0

POWER EQUIPMENT OPERATORS: Backhoe
Basic Hourly: $ 14.570 Fringe Benefits: $ 2.920 SUMT1002A 08/01/1992 Zone: 0

POWER EQUIPMENT OPERATORS: Bulldozer
Basic Hourly: $ 14.370 Fringe Benefits: $ 2.990 SUMT1002A 08/01/1992 Zone: 0

POWER EQUIPMENT OPERATORS: Crane, all sizes
Basic Hourly: $ 15.850 Fringe Benefits: $ 3.010 SUMT1002A 08/01/1992 Zone: 0

POWER EQUIPMENT OPERATORS: Forklift
Basic Hourly: $ 14.690 Fringe Benefits: $ 3.280 SUMT1002A 08/01/1992 Zone: 0

POWER EQUIPMENT OPERATORS: Front End Loader
Basic Hourly: $ 14.310 Fringe Benefits: $ 3.390 SUMT1002A 08/01/1992 Zone: 0

POWER EQUIPMENT OPERATORS: Motor Patrol
Basic Hourly: $ 14.430 Fringe Benefits: $ 3.230 SUMT1002A 08/01/1992 Zone: 0

POWER EQUIPMENT OPERATORS: Roller, Compaction
Basic Hourly: $ 14.030 Fringe Benefits: $ 3.390 SUMT1002A 08/01/1992 Zone: 0

POWER EQUIPMENT OPERATORS: Roller, Hot Mix
Basic Hourly: $ 14.570 Fringe Benefits: $ 2.890 SUMT1002A 08/01/1992 Zone: 0

POWER EQUIPMENT OPERATORS: Scraper
Basic Hourly: $ 13.040 Fringe Benefits: $ 3.440 SUMT1002A 08/01/1992 Zone: 0

ROOFERS
Basic Hourly: $ 13.150 Fringe Benefits: $ 0.000 SUMT1002A 08/01/1992 Zone: 0

Notes:

SHEET METAL WORKERS (Including HVAC Duct Work)
Basic Hourly: $ 21.230 Fringe Benefits: $ 6.100 SHEE0103A 07/01/1999 Zone: 0

Notes:

SOFT FLOOR LAYERS
Basic Hourly: $ 17.530 Fringe Benefits: $ 0.000 SUMT1002A 08/01/1992 Zone: 0

Notes:

SPRINKLER FITTERS
Basic Hourly: $ 22.600 Fringe Benefits: $ 6.400 SFMT0669A 04/01/1999 Zone: 0

Notes:

TILE SETTERS
Basic Hourly: $ 16.000 Fringe Benefits: $ 2.050 SUMT1002A 08/01/1992 Zone: 0

TRUCK DRIVERS: Dump
Basic Hourly: $ 14.580 Fringe Benefits: $ 3.020 SUMT1002A 08/01/1992 Zone: 0

TRUCK DRIVERS: Water/Fuel/Oil
Basic Hourly: $ 14.190 Fringe Benefits: $ 2.650 SUMT1002A 08/01/1992 Zone: 0

Notes:

WELDERS
Basic Hourly: $ 0.000 Fringe Benefits: $ 0.000 / / Zone: 0

Notes:

Receive rate prescribed for craft performing operation
to which welding is incidental.

In the listing above, the "SU" designation means that rates listed under that identifier do not reflect collectively bargained wage and fringe benefit rates. Other designations indicate unions whose rates have been determined to be prevailing.

WAGE DETERMINATION APPEAL PROCESS

1.) Has there been an initial decision in the matter? This can be:

* an existing published wage determination
* a survey underlying a wage determination
* a Wage and Hour Division letter setting forth a position on a wage determination matter
* a conformance (additional classification and rate) ruling

On survey related matters, initial contact, including requests for summaries of surveys, should be with the Wage and Hour Regional Office for the area in which the survey was conducted because those Regional Offices have responsibility for the Davis-Bacon survey program. If the response from this initial contact is not satisfactory, then the process described in 2.) and 3.) should be followed.

With regard to any other matter not yet ripe for the formal process described here, initial contact should be with the Branch of Construction Wage Determinations. Write to:

Branch of Construction Wage Determinations
Wage and Hour Division
U.S. Department of Labor
200 Constitution Avenue, N.W.
Washington, D.C. 20210

2.) If the answer to the question in 1.) is yes, then an interested party (those affected by the action) can request review and reconsideration from the Wage and Hour Administrator (See 29 CFR Part 1.8 and 29 CFR Part 7). Write to:

Wage and Hour Administrator
U.S. Department of Labor
200 Constitution Avenue, N.W.
Washington, D.C. 20210

The request should be accompanied by a full statement of the interested party's position and by any information (wage payment data, project description, area practice manual, etc.) that the requestor considers relevant to the issue.

3.) If the decision of the Administrator is not favorable, an interested party may appeal directly to the Administrative Review Board (formerly the Wage Appeals Board). Write to:

Administrative Review Board
U.S. Department of Labor
200 Constitution Avenue, N.W.
Washington, D.C. 20210

4.) All decisions by the Administrative Review Board are final.

POC: Patricia Holmes

TABLE OF CONTENTS

TECHNICAL SPECIFICATIONS

GENERAL: The Division 1 Specifications have been prepared by the Government and specify administrative and procedural requirements applicable to this contract. The Contractor shall not revise or alter Division 1 Specifications, except for providing the input as specified in Section 00810, paragraph SPECIFICATIONS.
The Division 2 through 16 Specifications shall be used by the Contractor for this project. See Section 00810, paragraph SPECIFICATIONS for details.

Section No.	Section Title
	DIVISION 1 - GENERAL REQUIREMENTS
01001	Supplementary Requirements
01005	Site Specific Supplementary Requirements
01025	Measurement and Payment
01035	Modification Procedures
01061	Environmental Protection
01320	Project Schedule
01330	Submittal Procedures
01415	Metric Measurements
01451	Contractor Quality Control
01452	Special Inspection for Seismic-Resisting Systems
01501	Construction Facilities and Temporary Controls
01701	Operations and Maintenance Manuals
01702	As-Built Records and Drawings
01703	Warranty of Construction
01704	Form 1354 Checklist
01705	Equipment-In-Place List
	DIVISION 2 - SITE WORK
02220	Demolition
02234	Subbase Course
02300	Earthwork
02315	Excavation, Filling and Backfilling for Buildings
02316	Excavation, Trenching, and Backfilling for Utilities Systems
02383	Drilled Foundation Caissons (Piers)
02510	Water Distribution System
02531	Sanitary Sewers
02552	Pre-engineered Underground Heating Distribution System
02555	Pre-Fabricated Underground Cooling Distribution System
02556	Gas Distribution System
02630	Storm- Drainage System
02722	Aggregate Base Course
02741	Bituminous Paving for Roads, Streets and Open Storage Areas

Section No.	Section Title
02763	Pavement Markings
02770	Concrete Sidewalks and Curbs and Gutters
02811	Irrigation Sprinkler Systems
02921	Seeding
02922	Sodding
02930	Exterior Planting

DIVISION 3 - CONCRETE

03100	Structural Concrete Formwork
03150	Expansion Joints, Contraction Joints, and Waterstops
03200	Concrete Reinforcement
03300	Cast-in-Place Structural Concrete
03300A	Concrete For Dumpster Pads
03413	Precast Architectural Concrete

DIVISION 4 - MASONRY

04220	Nonbearing Masonry Veneer/Steel Stud Walls

DIVISION 5 - METALS

05055	Welding, Structural
05120	Structural Steel
05300	Steel Decking
05450	Pre-Engineered Light Gauge Steel Trussed Frames
05500	Miscellaneous Metal

DIVISION 6 - WOOD AND PLASTICS

06100	Rough Carpentry
06200	Finish Carpentry

DIVISION 7 - THERMAL & MOISTURE PROTECTION

07240	Exterior Insulation and Finish System
07250	Spray-Applied Fireproofing
07411	Standing Seam Metal Roofing (SSMR)
07600	Sheet Metalwork, General
07840	Firestopping
07900	Joint Sealing

DIVISION 8 - DOORS & WINDOWS

08110	Steel Doors and Frames
08210	Wood Doors
08520	Aluminum Windows
08700	Builders’ Hardware
08810	Glass and Glazing

Section No.	Section Title
	DIVISION 9 - FINISHES
09250	Gypsum Wallboard
09310	Ceramic Tile
09650	Resilient Flooring
09680	Carpet
09720	Wall Coverings
09900	Painting, General
	DIVISION 10 - SPECIALTIES
10430	Exterior Signage
10440	Interior Signage
10550	Mailboxes
10800	Toilet Accessories
10900	Storage Lockers
10999	Fire Extinguisher Cabinets
	DIVISION 11 - EQUIPMENT
	(Not Used)
	DIVISION 12 - FURNISHINGS
12320	Cabinets and Countertops
12490	Window Blinds, Shades, and Drapery Hardware
	DIVISION 13 - SPECIAL CONSTRUCTION
13080	Seismic Protection For Miscellaneous Equipment
13110	Cathodic Protection System (Sacrificial Anode)
13112	Cathodic Protection System (Impressed Current)
13125	Patio Cover and Miscellaneous Site Furnishings
13851	Fire Detection and Alarm System, Addressable
13852	Fire Alarm Reporting System, Radio Type
13930	Wet Pipe Sprinkler System, Fire Protection
	DIVISION 14 - CONVEYING SYSTEMS
	(Not Used)
	DIVISION 15 - MECHANICAL
15070	Seismic Protection for Mechanical Equipment
15080	Thermal Insulation For Mechanical Systems
15190	Gas Piping Systems
15400	Plumbing, General Purpose
15556	Forced Hot Water Heating Systems Using Water Heat Exchangers
15650	Central Refrigerated Air-Conditioning System

Section No.	Section Title
15895	Air Supply, Distribution, Ventilation, and Exhaust System
15951	Direct Digital Control for HVAC
15990	Testing, Adjusting and Balancing of HVAC Systems
15995	Commissioning of HVAC Systems

DIVISION 16 - ELECTRICAL

16070	Seismic Protection for Electrical Equipment
16375	Electrical Distribution System, Underground
16415	Electrical Work, Interior
16710	Premises Distribution System
16768	Fiber Optic Data Transmission System

SECTION 01001

SUPPLEMENTARY REQUIREMENTS

PART 1 GENERAL

1.1 DEFINITIONS

The references listed below are to be defined as indicated wherever they may be used in the TECHNICAL SPECIFICATIONS.

"SUPPLEMENTARY REQUIREMENTS " shall be read to pertain to any of the sections of the DIVISION 1 as required by the content of the section or paragraph containing the reference.

Specification “SECTION 01300 – SUBMITTALS” shall be read as a specification “SECTION 01330 – SUBMITTAL PROCEDURES”.

Specification “SECTION 01400 – CONTRACTOR QUALITY CONTROL” shall be read as a specification “SECTION 01451 – CONTRACTOR QUALITY CONTROL”.

1.2 CONSTRUCTION SCHEDULING

The instructions for preparation and submittal of the Contractor-prepared Network Analysis System are found in SECTION 01320, PROJECT SCHEDULE.

1.3 CORRESPONDENCE

1.3.1 All correspondence shall be addressed to the Contracting Officer, shall be serially numbered commencing with Number 1, with no numbers missing or duplicated and shall be forwarded in quintuplicate, as directed by the authorized representative of the Contracting Officer, and shall include an additional copy forwarded to a separate designated location. All copies provided shall be legible. Enclosures attached or transmitted with the correspondence shall also be furnished with the original and each copy. Each serial letter shall make reference to the contract name, contract number and shall have only one subject.

1.3.2 For submission of Contractor payment requests, See Section 01025 - PAYMENT.

1.4 ADVANCED NOTICE OF CONTRACTOR PERFORMED ACCEPTANCE TESTING

The Contractor shall notify the Contracting Officer a minimum of 20 days prior to performing any acceptance or "buy off" testing of the following systems: (1) EMCS, (2) Fire Detection/Protection, (3) Intrusion Detection System, and (4) HVAC. Advance notification is not required for testing performed as part of fabrication or installation.

1.5 CONTRACTOR'S FILES

Contractor shall maintain "Approved (Action Code "A") and "Approved Except as Noted (Action Code "B") shop drawing files in fabrication shops and at project sites for government use.

1.6 AUDIO-VIDEO RECORDINGS

1.6.1 General

The Contractor shall provide all equipment, materials, and trained personnel to visually and audibly record (video tape) all on site operations and maintenance (O&M) training sessions for this contract. The video technician shall be employed by a video production company that has been in business for a minimum of 2 years. The Contractor shall submit the resume of the technician and video production company. Also the Contractor shall submit for approval an agenda or an outline breakdown of the proposed presentation. Video tapes shall be produced in the VHS format. Audio shall be adjusted, filtered or otherwise controlled to insure that the trainer can be understood at all times. Each system or piece of equipment shall be covered in a single tape or set of tapes which shall be correlated with the O&M manuals provided. Video tapes and their individual storage cases shall be identified with a typewritten label showing the project, equipment or system, and contract number; this same information shall be provided as an introduction on each video tape. When two or more tapes are provided, they shall be submitted as a set in an appropriate storage container.

1.6.2 Submittals

Prior to conducting the training sessions the following shall be submitted for approval:

1) A training plan consisting of the agenda or an outline breakdown of the proposed presentation and

2) The qualifications of the trainer and the video recording technician

Two copies of the video taped material shall be submitted to the Contracting Officer within 10 days after completion of video taping the training sessions.

1.7 MECHANICAL AND ELECTRICAL LAYOUT DRAWINGS

The Contractor shall submit, for Contracting Officer's approval, scaled layout drawings, including appropriate elevations and sections, as required, showing the room arrangement the Contractor proposes for all pieces of mechanical and electrical equipment and appurtenances thereto, such as but not limited to: air conditioning equipment, boilers, compressors, hot water tanks, pumps, electrical control panels, ducts and piping, that are

to be located in the room. Mechanical and electrical layouts shall be coordinated to eliminate any conflicts of installed equipment. No payments will be made to the Contractor for furnishing or installing equipment until the layout drawings have been approved by the Contracting Officer. Mechanical and electrical equipment layout drawings shall be identified and submitted as specified herein. Equipment rooms shall be designed to accommodate equipment of required capacities as available from several manufacturers with sufficient space left for access, servicing, and removal. The use of equipment items with dimensions such as "to crowd the space" will not be permitted.

1.8 COLOR BOARDS

Two sets of color boards shall be submitted within 60 calendar days after receipt of Notice to Proceed. The board shall include samples of colors and finishes of every finish such as on walls, floors, and ceilings. This would include, but not be limited to, paint, floor and wall tile, acoustical panels, carpet, wall base, plastic laminate, etc. Where special finishes such as architectural concrete or prefinished metal panels are required, samples of not less than 305 mm^2 shall be submitted with the board. Boards shall include, where applicable, color samples of integrally colored block, brick, and prefinished metal roofing and siding. Samples to be attached to a plastic foam type board, prepared in a professional manner. Label board with material type, color, vendor, etc. Also, label with project name, contract number, and Contractor and A-E names. The board shall be 610 mm by 610 mm. If more space is needed, more than one board per set may be submitted. This is not meant to replace the samples called for in other portions of the specifications. The Contractor shall certify that he has reviewed the color boards in detail and that they are in strict accordance with the contract drawings and specifications, except as may be otherwise explicitly stated.

1.9 SAMPLE ROOM

After all finish materials have been submitted and approved, but prior to the installation of any of them, the Contractor shall construct and completely finish one sample room that is/will be representative of all other rooms. Finishes shall include, but not necessarily be limited to, paint, wall covering of any type, floor finish of any type including base, ceiling finish of any type, and all electrical and mechanical finish trim. No payment will be made for any installation of finish materials until this room has been constructed and approved by a representative of the Contracting Officer. Once approved, this room shall serve as the “model” for finish and workmanship of all other rooms in the facility.

1.10 IDENTIFICATION OF EMPLOYEES AND MILITARY REGULATIONS:

(a) The Contractor shall be responsible for compliance with all regulations and orders of the Commanding Officer of the Military Installation, respecting identification of employees, movements on installation, parking, truck entry, and all other military regulations which may affect the work.

(b) The work under this Contract is to be performed at an operating Military Installation with consequent restrictions on entry and movement of nonmilitary personnel and equipment.

1.11 PRESERVATION OF HISTORICAL, ARCHEOLOGICAL AND CULTURAL RESOURCES
(1985 JAN OCE):

If, during construction activities, the Contractor observes items that might have historical or archeological value, such observations shall be reported immediately to the Contracting Officer so that the appropriate authorities may be notified and a determination can be made as to their significance and what, if any, special disposition of the finds should be made. The Contractor shall cease all activities that may result in the destruction of these resources and shall prevent his employees from trespassing on, removing, or otherwise damaging such resources.

1.11 SPECIAL SAFETY REQUIREMENTS:

All construction activities shall be conducted in strict compliance with the Corps of Engineers Safety and Health Requirements Manual EM 385-1-1, and Occupational Safety and Health Administration regulations, as applicable.

1.11.1 In addition to Safety and Health Requirements Manual EM 385-1-1, and all applicable OSHA standards, the Contractor shall comply with the requirements listed below. Paragraph numbers refer to EM 385-1-1 or are added thereto.

(a) Paragraph 01.A.12: Add new paragraph: Safety Personnel. The Contractor shall designate a person on his staff to manage the Contractor's safety and accident prevention program. This person will provide a point of contact for the Contracting Officer on matters of job safety, and shall be responsible for ensuring the health and safety of on site personnel.

(b) Paragraph 01.D.02, revise as follows:

(1) Replace paragraph 01.D.02c with the following:
"c. Property damage in excess of $2,000.00

(2) Add new paragraph d as follows:
"An injury resulting in a lost workday, not including the day of injury."

1.12 TIME EXTENSIONS FOR UNUSUALLY SEVERE WEATHER (ER 415-1-15 31 OCT 89)

This Paragraph specifies the procedure for the determination of time extensions for unusually severe weather in accordance with the CONTRACT CLAUSE entitled "Default

(Fixed Price Construction)". In order for the Contracting Officer to award a time extension under this clause, the following conditions must be satisfied:

1.12.1 The weather experienced at the project site during the contract period must be found to be unusually severe, that is, more severe than the adverse weather anticipated for the project location during any given month.

1.12.2 The unusually severe weather must actually cause a delay to the completion of the project. The delay must be beyond the control and without the fault or negligence of the contractor.

1.12.3 The following schedule of monthly anticipated adverse weather delays is based on National Oceanic and Atmospheric Administration (NOAA) or similar data for the project location and will constitute the base line for monthly weather time evaluations. The Contractor's progress schedule must reflect these anticipated adverse weather delays in all weather dependent activities.

MONTHLY ANTICIPATED ADVERSE WEATHER DELAY
WORK DAYS BASED ON (5) DAY WORK WEEK

JAN	FEB	MAR	APR	MAY	JUN	JUL	AUG	SEP	OCT	NOV	DEC
19	15	16	10	4	4	2	2	3	6	13	17

1.12.4 Upon acknowledgment of the notice to proceed (NTP) and continuing throughout the contract, the contractor will record on the daily QCQ report, the occurrence of adverse weather and resultant impact to normally scheduled work. Actual adverse weather delays must prevent work on critical activities for 50 percent or more of the contractor's scheduled work day.

1.12.5 The number of actual adverse weather delay days shall include days impacted by actual adverse weather (even if adverse weather occurred in previous month), be calculated chronologically from the first to the last day of each month, and be recorded as full days. If the number of actual adverse weather delay days exceeds the number of days anticipated in paragraph 1.12.3, above, the Contracting Officer will convert any qualifying delays to calendar days, giving full consideration for equivalent fair weather work days, and issue a modification in accordance with the contract clause entitled " Default (Fixed Price Construction)".

PARTS 2 AND 3 NOT USED

END OF SECTION

SECTION 01005

SITE SPECIFIC SUPPLEMENTARY REQUIREMENTS

1. CONDUCT OF WORK:

1.1 COORDINATION AND ACCESS TO SITE

1.1.1 Coordination with using agencies shall be made through the Contracting Officer to assist the Contractor in completing the work with a minimum of interference and inconvenience.

1.1.2 Work hours in the construction area will be restricted to 7:45 a.m. to 4:15 p.m. daily, Monday through Friday, excluding holidays. Work hours other than as specified above shall be coordinated with and approved by the Contracting Officer.

1.2 FIRE REGULATIONS

Contractor shall comply with base fire regulations and NFPA 241 Building Construction and Demolition requirements. Contractor shall provide adequate fire extinguishers for the construction site and remove them upon acceptance of the facility.

1.3 GENERAL AREA REQUIREMENTS

Security requirements and procedures shall be coordinated with the 341 Security Forces Squadron, Operations Section (telephone 406- 731-6416/4341), Malmstrom AFB. Activities of the Contractor and Contractor's employees and subcontractors and their employees while on the base, will be conducted in accordance with base regulations, including those of the fire marshall, as well as security directives. This includes, but is not limited to, obtaining a Work Clearance Request (AF Form 103) before any digging and giving way to alert vehicles during alerts if located on a marked alert route.

1.3.1 Identification Credentials

All Contractor personnel, except those not under the Contractor's direct control, such as: concrete trucks and material deliveries, will be required to process in and obtain an Application for Civilian Identification Card (DD Form 1172) from the Corps of Engineers Malmstrom AFB Project Office in Building 1085. The Contractor shall provide the employee with a letter or form, identifying the employee and company name. After completion of the DD Form 1172, proceed to the Visitor Control Center in Building 192 (working hours - Monday through Friday - 7:30 a.m. to 4:30 p.m.) to obtain an identification badge. In addition, all private vehicles requiring access to the base will be required to

display a vehicle sticker (AF Form 75) which may also be obtained in Building 192 after presentation of vehicle registration and certification of vehicle insurance coverage. The Contractor shall notify the Security Forces Squadron, Operations Section, through the Contracting Officer, of all losses of badges, within 48 hours after the loss, by name, address, and badge number. Employees who have terminated employment or who have been dismissed must surrender their AF Form 75 Visitor/Vehicle Pass and Identification ID Card to the Visitors Control Center through the Contracting Officer. Employees without a badge in their possession will be denied access to the base and work areas and may be subject to detainment until proper identification is made. The badge shall not be worn or displayed off the military base.

1.3.2 Commercial or company vehicles will be allowed access to the base provided company emblems are attached to the sides of the vehicles.

1.3.3 Equipment and storage areas: See specification Section 01501 CONSTRUCTION FACILITIES AND TEMPORARY CONTROLS.

1.4 CONSTRUCTION SITE FENCE

The Contractor shall provide fence around the construction site. The fence shall be chain link, 1.5 m high.

1.5 MOTORIZED EQUIPMENT

1.5.1 Truck Load Limits

Truck load limits on base are restricted to:

a. 1 April - 1 June: 350 pounds per inch width of tire.
b. All other times: 400 pounds per inch width of tire.

1.5.2 Fire Extinguishers

Motorized equipment shall be equipped with fire extinguishers as follows:

a. Pickup truck or other light passenger vehicles, one extinguisher per vehicle, rating 5 BC.
b. All other trucks and heavy motorized equipment, two extinguishers per vehicle, rating 10 BC.

1.6 UTILITY OUTAGES

Contractor shall schedule and coordinate unavoidable utility outages with the Contracting Officer and Base Civil Engineer at least 10 days in advance. Unless indicated otherwise,

the Contractor shall give 14 days preliminary notice of future outage. Final notice shall be given 10 calendar days before outage and shall specify date and time of the outage. The 'Utility Outage Notice' shall be completed by the Contractor and submitted to the Contracting Officer for approval. No interruptions shall be made until the approved Notice is returned to the Contractor. Outages shall be kept to a minimum and any one outage shall not last more than 2 hours. All outages longer than 2 hours shall be after normal duty hours or on a weekend at the Government option. All outages that shut down motors which support a heating system shall require backup power by the Contractor to be connected during the outage, as requested by the Government..

1.7 PROTECTION OF GOVERNMENT PROPERTY

In addition to requirements of the CONTRACT CLAUSES, Contractor shall protect all Government property within the buildings in which he is working, except for such property as is required to be demolished. Property which is to be demolished shall be protected until its scheduled demolition time. Protection shall include, but not be limited to, protection from construction generated dust, debris, water, and vibration.

PART 2. NOT USED.

END OF SECTION

This page intentionally blank

SECTION 01025

MEASUREMENT AND PAYMENT

PART 1 GENERAL

1.1 GENERAL

The contract price for each item shall constitute full compensation for furnishing all plant, labor, materials, appurtenances, and incidentals and performing all operations necessary to construct and complete the items in accordance with these specifications and the applicable drawings, including surveying performed by the Contractor. Payment for each item shall be considered as full compensation, notwithstanding that minor features may not be mentioned herein. Work paid for under one item will not be paid for under any other item. No separate payment will be made for the work, services, or operations required by the Contractor, as specified in DIVISION 1, GENERAL REQUIREMENTS, to complete the project in accordance with these specifications; all costs thereof shall be considered as incidental to the work.

1.2 PROGRESS PAYMENT INVOICE

Requests for payment shall be submitted in accordance with Federal Acquisition Regulations (FAR) Subpart 32.9, entitled "PROMPT PAYMENT", and Paragraphs 52.232-5 and 52.232-27, entitled "Payments Under Fixed-Price Construction Contracts", and "Prompt Payment for Construction Contracts", respectively. In addition each request shall be submitted in the number of copies and to the designated billing office as shown in the Contract.

1.2.1 When submitting payment requests, the Contractor shall complete Blocks 1 through 12 of the "PROGRESS PAYMENT INVOICE" Form as directed by the Contracting Officer. (A sample form is attached at the end of this Technical Specification Section.) The completed form shall then become the cover document to which all other support data shall be attached.

1.2.2 One additional copy of the entire request for payment, to include the "PROGRESS PAYMENT INVOICE" cover document, shall be forwarded to a separate address as designated by the Contracting Officer.

1.2.3 The Contractor shall submit with each pay request, a list of subcontractors that have worked during that pay period. The listing shall be broken down into weeks, identifying each subcontractor that has worked during a particular week, and indicate the total number of employees that have worked on site for each subcontractor for each week. The prime

Contractor shall also indicate the total number of employees for its on site staff for each week.

PARTS 2 and 3 NOT USED

PROGRESS PAYMENT INVOICE

See Federal Acquisition Regulations (FAR) 32.900, 52.232-5, & 52.232-27

1. PROJECT AND LOCATION	2. DATE
3. CONTRACTOR NAME AND ADDRESS (Must be the same as in the Contract)	4. CONTRACT NO. _____ 5. INVOICE NO.
6. DESCRIPTION OF WORK	7. PERIOD OF PERFORMANCE From: To:
8. DISCOUNT TERMS	
9. OFFICIAL TO WHOM PAYMENT IS TO BE FORWARDED Name: Title: Phone: ( ) -	10. OFFICIAL TO BE NOTIFIED OF DEFECTIVE INVOICE Name: Title: Phone ( ) -

11. CERTIFICATION: I hereby certify, to the best of my knowledge and belief, that

(1) The amounts requested are only for the performance in accordance with the specifications, terms, and conditions of this contract;

(2) Payments to subcontractors and suppliers have been made from previous payments received under the contract, and timely payments will be made from the proceeds of the payment covered by this certification,

in accordance with subcontract agreements and the requirements of Chapter 39 of Title 31, United States Code;

and

(3) This request for progress payment does not include any amounts which the prime contractor intends to withhold or retain from a subcontractor or supplier in accordance with the terms and conditions of the subcontract.

_____ _____ _____

(Signature) **(Title)** **(Date)**

12. OTHER INFORMATION OR DOCUMENTATION required by Contract. Provide two (2) copies of each (check and attach if applicable): _____ Updated Progress Chart/Schedule _____ Progress Narrative _____ Certified Payrolls (submitted weekly) _____ Safety Exposure Report _____ Updated Submittal \register _____ Progress Photos _____ Subcontractor/Employee Listings	(FOR GOVERNMENT USE ONLY) Retainage: _____% Amt: $_____ Withholdings: $ _____ Reason: _____ _____ _____ Following items are current: As-Builts _____ Yes _____ No O & M Manuals _____ Yes _____ No 1354 Data _____ Yes _____ No Submittal Register _____Yes _____No

SECTION 01035

MODIFICATION PROCEDURES

PART 1 GENERAL

1.1 PROPOSED PROJECT MODIFICATIONS:

Price proposals for proposed modifications shall be submitted in accordance with the requirements of the Contract Clause MODIFICATION PROPOSALS - PRICE BREAKDOWNS. If change order work impacts or delays other unchanged contract work, the costs of such impacts or delays shall be included in the proposals and separately identified. Additional instructions for submitting price proposals can be found in NPSP-415-1-1, INSTRUCTION AND INFORMATION FOR CONTRACTORS, a copy of which will be furnished to the Contractor at the Preconstruction Conference. For information applicable to equipment rates used in contract modifications, refer to 00800 - SPECIAL CLAUSES, clause “EQUIPMENT OWNERSHIP AND OPERATING EXPENSE SCHEDULE”.

PART 2 PRODUCTS (NOT USED)

PART 3 EXECUTION (NOT USED)

END OF SECTION

This page intentionally blank

SECTION 01061

ENVIRONMENTAL PROTECTION

PART 1 GENERAL

1.1 SCOPE

This Section covers prevention of environmental pollution and damage as the result of construction operations under this contract. For the purpose of this specification, environmental pollution, and damage is defined as the presence of chemical, physical, or biological elements or agents which adversely affect human health or welfare; unfavorably alter ecological balances of importance to human life; affect other species of importance to man; or degrade the utility of the environment for esthetic, cultural, and/or historical purposes. The control of environment pollution and damage requires consideration of air, water, and land, and includes management of visual esthetics, noise, and solid waste, as well as other pollutants.

1.2 QUALITY CONTROL

The Contractor shall establish and maintain quality control for environmental protection of all items set forth herein. The Contractor shall record any problems in complying with laws, regulations, and ordinances, and corrective action taken.

1.2.1 Subcontractors

Assurance of compliance with this Section by subcontractors will be the responsibility of the Contractor.

1.2.2 Asbestos Containing Materials

No asbestos-containing materials shall be used or installed under this project work.

1.3 NOTIFICATION

When the Contracting Officer notifies the Contractor in writing of any observed noncompliance with Federal, state, or local laws, regulations, or permits, the Contractor shall, after receipt of such notice, inform the Contracting Officer of proposed corrective action and take such action as may be approved. If the Contractor fails to comply promptly, the Contracting Officer may issue an order stopping all or part of the work until satisfactory corrective action has been taken. No time extensions will be granted or costs or damage allowed to the Contractor for any such suspension.

1.4 PROTECTION OF ENVIRONMENTAL RESOURCES

The environmental resources within the project boundaries and those affected outside the limits of permanent work under this contract shall be protected during the entire period of this contract. The Contractor shall confine his activities to areas defined by the drawings and specifications. Environmental protection shall be as stated in the following subparagraphs:

1.4.1 Protection of Land Resources

The Contractor shall not remove, cut, deface, injure, or destroy land resources including trees, shrubs, vines, grasses, topsoil, and land forms without special permission from the Contracting Officer except as otherwise specified or indicated. See Paragraph 1.5 for additional requirements relating to protection of trees during excavation in the vicinity of a tree.

1.4.2 Disposal of Garbage

Garbage shall be placed in containers which are emptied on a regular schedule. All handling and disposal shall be conducted to prevent contamination.

1.4.3 Refuse

Refuse shall be defined as debris other than organic materials such as brush or tree stumps.

1.4.3.1 Refuse Disposal and Cleanup

The cost of refuse disposal, such as transportation, handling, dumping fees as applicable, and similar cost, shall be included in the contract price. Refuse shall be disposed of off site, in accordance with all local, state, and Federal rules and regulations, at the Contractor's expense.

1.4.3.2 Fire Hazard

Cloths, cotton waste, and other combustible materials that might constitute a fire hazard shall be placed in closed metal containers and placed outside or destroyed at the end of each day.

1.4.4 Restrictions

The Contractor will not be permitted to deposit refuse in existing garbage cans or refuse dumpsters. Cleaners shall not be poured, drained, or washed into plumbing fixtures or sanitary or storm sewers. Debris, dirt, dust, and stains attributable to or resulting from the work effort shall be removed, cleaned, or effaced by the Contractor to the satisfaction of the

Contracting Officer prior to acceptance of the job. Refuse shall not be burned. Burning of vegetation or tree stumps will not be allowed unless the worksite is in an area approved for burning.

1.4.4.1 Waste Management and Disposal

State of Montana environmental regulations classify disposal sites for their respective abilities to handle various types of solid waste. Asphalt and concrete waste products are to be disposed of in licensed Class II and Class III disposal sites respectively. Contractor shall be responsible for complying with the "Montana Solid Waste Management Act" and the "Administrative Rules of Montana" concerning waste management and disposal.

1.4.5 Disposal of Chemical or Hazardous Waste

Hazardous waste generated by construction operations remains the property of the Contractor and shall be removed from Malmstrom AFB. Except as specified below, removal of this hazardous waste shall be coordinated with Waste Management, Inc., through the Contracting Officer. Contractor operations shall be, at all times, in compliance with the Resource Conservation and Recovery act (RCRA), 40 CFR, and Montana State Department of Health and Environmental Sciences (MSDHES). The Contractor shall maintain Material Safety Data Sheets (MSDS) for all material used on base and the MSDS' shall be on file on site at the job shack.

1.4.5.1 No more than 200 liters, total, of hazardous waste shall be accumulated by the Contractor on site. Once the 200-liter limit is reached, the Contractor has 72 hours to remove the waste from Malmstrom AFB. If any materials will be used that are corrosive, flammable, toxic, or reactive, the Contractor shall submit a Hazardous Materials/Hazardous Waste Control Plan to the CO for approval and coordination with 341 CES/CEVV. Contractor shall submit Material Safety Data Sheets (MSDS) to the CO for approval and coordination with 341 CES/CEVV for all paints and protective coatings, solvents, adhesives, and all other chemical products.

1.4.5.2 All hazardous materials used by the Contractor on base shall be stored properly in special areas in accordance with all regulatory requirements. The Contractor shall:

- Keep containers closed when not in use.
- Label containers with warning labels.
- Post hazardous signs if required.
- Check routinely for leaks and spills.
- Keep materials at central location.

1.4.5.3. PCBs

No PCBs are expected to be encountered in this contract.

1.4.5.4 Spills

No hazardous materials shall be sprayed or spilled on the ground, asphalt, or concrete covered surfaces at job sites. The Contractor will be charged for any cleanups and disposal costs done by base personnel. Spills of any type material (excluding clean water) shall be reported for evaluation to determine if clean-up is required. All spill cleanups shall be handled by trained personnel only. Refer to CFR 1910.120. Any hazardous product cleanup on base shall be disposed of through Malmstrom AFB only.

1.4.5.4.1 Spill Response Procedure:

The Contractor shall:

- Notify Construction Management and Base Fire Department of any spills.
- Stop source of spill without undue risk of personnel injury. Use on site containment, safety equipment, and materials.
- Make spill scene off limits to all non-cleanup personnel.
- Restrict all sources of ignition if flammable material in spill.
- Report to Environmental Flight, (telephone (406) 731-6163).

1.4.6 Disposal of Solid Waste

1.4.6.1 The Contractor is responsible for handling and disposal of all solid waste generated at the job site. The Contractor shall make all arrangements for disposal of any wastes including wastes requiring special handling such as asbestos, rubble, or non-hazardous chemical wastes. The Contractor is responsible for laboratory testing and any documentation submittals required by the landfill owner. Montana Department of Environmental Quality (MDEQ) written approval is required for any non-inert materials such as asphalt containing materials, asphalt roofing materials, steel containing materials, etc., that are to be disposed of in the Class III landfill site.

1.4.6.2 All non-hazardous wastes shall be properly disposed of through a licensed landfill site. No landfill site is available on base. Demolition rubble shall not be buried anywhere on base or at the work site. Any cleanups and the costs of these cleanups of improper waste disposals or removals of improperly placed hazardous waste materials shall be the responsibility of the Contractor. Copies of all disposal documents shall be furnished to the Contracting Officer.

1.4.7 Disposal of Discarded Materials

Discarded materials, other than those which can be included in the solid waste category, shall be handled as directed. The Contractor shall provide copies of all weight receipts for solid waste disposal to the Contracting Officer.

1.4.8 Disposal of Asbestos Containing Materials (ACM)

No ACMs are included in this contract.

1.4.9 Protection of Water Resources

The Contractor shall keep construction activities under surveillance, management, and control to avoid pollution of surface and ground waters.

1.4.9.1 Storm Water and Waste Water System Discharge

1.4.9.1.1 The Contractor shall not dump any restricted materials down the sanitary sewer or waste water disposal system without approval from the Environmental Flight, telephone 406-731-6437. All discharges to the sewer shall meet Federal, State, and Local regulatory requirements and shall meet the permit requirements limiting Malmstrom AFB discharges. The base sewer discharge is tested weekly by the City of Great Falls for conformance requirements.

1.4.9.1.2 Restricted waste water materials include those that create a fire or explosion hazard; are toxic or poisonous; waters or wastes having a pH lower than 5.5 or higher than 9.0; solid or viscous substances that can obstruct the sewer flow; interfere with the biological activity of a treatment plant; inhibit biological activity by increasing the temperature too much; any fats, wax, grease, or oils in excess of 100 mg/1, total petroleum hydrocarbons in excess of 25mg/l, noxious or malodorous liquids; contain metals in excess of iron-0.03 mg/1, chromium-16.72 mg/1, copper-15.13 mg/1, zinc-0.51 mg/1, arsenic-1.36 mg/1, cadmium-5.0 mg/1, lead-2.63 mg/1, mercury-0.06 mg/1, nickel-15.57 mg/1, cyanide-0.505 mg/l, or silver-0.70 mg/1, exceed Malmstrom AFB industrial permit allowable limits; contain phenols or dyes; are radioactive; contain over 100 lbs per day of total suspended solids (TSS) or five day biochemical oxygen demand (BOD), or cause the base waste water discharge to exceed 200 mg/1 BOD or 250 mg/1 TSS.

1.4.9.1.3 The Contractor shall not discharge any contaminated waters to the storm drain system. Prior approval from the Environmental Flight (telephone (406) 731-6437) is required for any questionable liquid discharges.

1.4.9.1.4 The Montana Pollutant Discharge Elimination System (MPDES) regulations (ARM 17.30.1332) requires a storm water discharge permit for construction activity in which clearing, grading and excavation will result in disturbance of >5 acres total or the

disturbance of >1 acre if located within 100 feet of a surface water body (stream, river or lake). If required based on the above, the Contractor shall provide the Contracting Officer with an Erosion Control Plan designed by qualified personnel and subsequently approved by the Montana Department of Environmental Quality (MDEQ) prior to construction activities. The objective of the plan is to minimize erosion of disturbed areas during the construction and post construction phases of a project. The Contractor will be required to control all construction operations in strict compliance with the approved Erosion Plan.

1.4.10 LEAD BASED PAINT (LBP)

No LBP is present in this contract.

1.4.11 PROTECTION OF AIR RESOURCES

1.4.11.1 Burning of material is not allowed on base by the Contractor.

1.4.11.2. The maintenance and repair work to air conditioning and refrigeration systems shall require that all CFC handling standards be met. Maintenance and repair work on any equipment used or covered by this contract shall require all CFC handling standards be met.

1.4.11.3. The Contractor shall not vent or cause to be vented CFC and HCFC refrigerants (R-11, R-12, R-22, R-113, R-114, R-115, R-500, R-501, R-502 or other mixtures containing CFCs) to the atmosphere during repair or maintenance work on any equipment covered by this contract.

1.4.11.4. The Contractor shall have available refrigerant recovery or reclaim equipment to perform the work. Any recovered refrigerant from Government owned equipment shall be provided to the Government in EPA approved containers after coordination with the Contracting Officer.

1.4.11.5. The Contractor personnel who operate refrigerant reclaim or recycling equipment shall possess the necessary state and local certifications for operating the equipment.

1.4.11.6. The Contractor shall be responsible for meeting all requirements, permitting, licensing and certification required by state or local ordinance to work on refrigeration systems.

1.4.11.7 Particulates

Dust particles, aerosols, and gaseous byproducts from construction activities, processing, and preparation of materials shall be controlled at all times, including weekends, holidays, and hours when work is not in progress. Hydrocarbons and carbon monoxide emissions from equipment shall be controlled to Federal and state allowable limits at all times.

1.4.12 Nuclear Densometers

Where nuclear densometers or other devices containing radioactive elements are used on the project, the Contractor must have a proof of a Nuclear Regulatory Committee (NRC) permit for its use. The Contractor must also keep all radioactive equipment locked up when not in use and remove it from the base at completion of the work day.

1.5 PROTECTION OF TREES DURING EXCAVATION

Care shall be exercised by the Contractor when excavating trenches in the vicinity of trees. Where roots are 50 mm in diameter or greater, the trench shall be excavated by hand and tunneled. When large roots are exposed, they shall be wrapped with a heavy burlap for protection and to prevent drying. Trenches dug by machines adjacent to trees having roots less than 50 mm in diameter shall have the sides hand trimmed making a clean cut of the roots. Trenches having exposed tree roots shall be backfilled within 24 hours unless adequately protected by moist burlap or canvas.

1.6 MAINTENANCE OF POLLUTION CONTROL FACILITIES

The Contractor shall maintain all constructed facilities and portable pollution control devices for the duration of the contract or for that length of time construction activities create the particular pollutant.

1.7 RESTORATION OF LANDSCAPE (VEGETATION - SUCH AS TREES, PLANTS, AND GRASS) DAMAGE

All landscape features (vegetation - such as trees, plants, and grass) damaged or destroyed during Contractor operations outside and within the work areas shall be restored to a condition similar to that which existed prior to construction activities unless otherwise indicated on the drawings or in the specifications. This restoration shall be done at no additional cost to the Government. If the Contractor fails or refuses to repair the damage promptly, the Contracting Officer may have the necessary work performed and charge the cost to the Contractor.

Trees shall be replaced in kind with a minimum 100 mm caliper nursery stock. Shrubs, vines, and ground cover shall be replaced in kind; size to be approved by the Contracting Officer.

All plant material shall meet specifications outlined in ANSI Z60.1 - current publication, "American Standard for Nursery Stock."

Grass areas shall be replaced in kind by sodding. Sod shall be required in all regularly maintained lawn areas and shall be installed according to specification section: SODDING.

END OF SECTION

SECTION 01320

PROJECT SCHEDULE

PART 1 GENERAL

1.1 SUBMITTALS

Government approval is required for submittals with a "GA" designation; submittals having an "FIO" designation are for information only. The following shall be submitted in accordance with Section 01300 SUBMITTALS:

SD-07 Schedules

GA Preliminary project schedule, two (2) copies.

GA initial project schedule, two (2) copies
Activity No. Sort
Predecessor/successor listing
Cost Schedule
Floppy Disk (SDEF Format or Primavera Project Planner Format)
Activity Code Dictionary.

FIO Periodic schedules updates, monthly updates two (2) copies.
Floppy Disks (SDEF Format)
Narrative
Activity No. Sort
Cost Schedule
Cash Flow Report (S-Curve)

SD-08 Statements

Qualifications; GA .

Documentation showing qualifications of personnel preparing schedule reports.

1.2 QUALIFICATIONS

The Contractor shall designate an authorized representative who shall be responsible for the preparation of all required project schedule reports. This person shall have previously created and reviewed computerized schedules. Qualifications of this individual shall be submitted to the Contracting Officer for review with the Preliminary Project Schedule submission.

PART 2 PRODUCTS (Not Applicable)

PART 3 EXECUTION

3.1 GENERAL

Pursuant to the Contract Clause, SCHEDULE FOR CONSTRUCTION CONTRACTS a Project Schedule as described below shall be prepared. The scheduling of construction shall be the responsibility of the Contractor. Contractor management personnel shall actively participate in its development. Subcontractors and suppliers working on the project should also contribute in developing and maintaining an accurate Project Schedule. The approved Project Schedule shall be used to measure the progress of the work, to aid in evaluating time extensions, and to provide the basis of all progress payments.

3.2 BASIS FOR PAYMENT

The schedule shall be the basis for measuring Contractor progress. Lack of an approved schedule or scheduling personnel shall result in an inability of the Contracting Officer to evaluate Contractor progress for the purposes of payment. Failure of the Contractor to provide all information, as specified below, shall result in the disapproval of the entire Project Schedule submission and the inability of the Contracting Officer to evaluate Contractor progress for payment purposes. In the case where Project Schedule revisions have been directed by the Contracting Officer and those revisions have not been included in the Project Schedule, then the Contracting Officer may hold retainage up to the maximum allowed by contract, each payment period, until revisions to the Project Schedule have been made.

3.3 PROJECT SCHEDULE

The computer software system utilized by the Contractor to produce the Project Schedule shall be capable of providing all requirements of this specification including the SDEF (Standard Data Exchange Format). Failure of the Contractor to meet the requirements of this specification shall result in the disapproval of the schedule. Manual methods used to produce any required information shall require approval by the Contracting Officer.

3.3.1 Use of the Critical Path Method

The Critical Path Method (CPM) of network calculation shall be used to generate the Project Schedule. The Contractor shall provide the Project Schedule in Precedence Diagram Method (PDM)

3.3.2 Level of Detail Required

With the exception of the initial and preliminary schedule submission, the Project Schedule shall include an appropriate level of detail. Failure to develop or update the Project

Schedule or provide data to the Contracting Officer at the appropriate level of detail, as specified by the Contracting Officer, shall result in the disapproval of the schedule. The Contracting Officer will use, but is not limited to, the following conditions to determine the appropriate level of detail to be used in the Project Schedule.

3.3.2.1 Activity Durations

Contractor submissions shall be required to follow the direction of the Contracting Officer regarding reasonable activity durations. Reasonable durations are those that allow the progress of activities to be accurately determined between payment periods. A rule of thumb, that the Contractor should use, is that less than 2 percent of all non-procurement activities' Original Durations shall be greater than 20 days.

3.3.2.2 Procurement Activities

Tasks related to the procurement of long lead materials or equipment shall be included as separate activities in the project schedule. Long lead materials and equipment are those materials that have a procurement cycle of over 90 days. Examples of procurement process activities include, but are not limited to: submittals, approvals, procurement, fabrication, delivery, installation, start-up, and testing.

3.3.2.3 Government Activities

Government and other agencies activities that could impact progress shall be shown. These activities include, but are not limited to: approvals, inspections, utility tie-in, Government Furnished Equipment (GFE) and notice to proceed for phasing requirements.

3.3.2.4 Responsibility

All activities shall be identified in the project schedule by the party responsible to perform the work. Responsibility includes, but is not limited to, the subcontracting firm, (at the lowest tier), contractor work force, or government agency performing a given task. Activities shall not belong to more than one responsible party. The responsible party for each activity shall be identified by the Responsibility Code.

3.3.2.5 Work Areas

All activities shall be identified in the project schedule by the work area in which the activity occurs. Activities shall not be allowed to cover more than one work area. The work area of each activity shall be identified by the Work Area Code.

3.3.2.6 Modification or Claim Number

Any activity that is added or changed by contract modification or used to justify claimed time shall be identified by a mod or claim code that changed the activity. Activities shall

not belong to more than one modification or claim item. The modification or claim number of each activity shall be identified by the Mod or Claim Number.

3.3.2.7 Bid Item

All activities shall be identified in the project schedule by the Bid Item to which the activity belongs. An activity shall not contain work in more than one bid item. The bid item for each appropriate activity shall be identified by the Bid Item Code.

3.3.2.8 (Not used)

3.3.2.9 Category of Work

All Activities shall be identified in the project schedule according to the category of work which best describes the activity. Category of work refers, but is not limited to, to the procurement chain of activities including such items as submittals, approvals, procurement, fabrication, delivery, installation, start-up, and testing. The category of work for each activity shall be identified by the Category of Work Code.

3.3.2.10 Feature of Work

All activities shall be identified in the project schedule according to the feature of work to which the activity belongs. Feature of work refers, but is not limited to a work breakdown structure for the project. The feature of work for each activity shall be identified by the Feature of Work Code.

3.3.3 Scheduled Project Completion

The schedule interval shall extend from notice-to-proceed to the contract completion date.

3.3.3.1 Project Start Date

The schedule shall start no earlier than the date that the Notice to Proceed (NTP) was acknowledged. The Contractor shall include as the first activity in the project schedule an activity called "Start Project". The "Start Project" activity shall have: a "ES" constraint, a constraint date equal to the date that the NTP was acknowledged, and a zero day duration.

3.3.3.2 Constraint of Last Activity

Completion of the last activity in the schedule shall be constrained by the contract completion date. Calculation on project updates shall be such that if the early finish of the last activity falls after the contract completion date, then the float calculation shall reflect a negative float on the critical path. The Contractor shall include as the last activity in the project schedule an activity call "End Project". The "End Project" activity shall have: a

"LF" constraint, a constraint date equal to the completion date for the project, and a zero day duration.

3.3.3.3 Early Project Completion

In the event the project schedule shows completion of the project prior to the contract completion date, the Contractor shall identify those activities that have been accelerated and/or those activities that are scheduled in parallel to support the Contractor's "early" completion. Contractor shall specifically address each of the activities noted at every project schedule update period to assist the Contracting Officer to evaluate the Contractor's ability to actually complete prior to the contract period.

3.3.4 Interim Completion Dates

Contractually specified interim completion dates shall also be constrained to show negative float if the early finish date of the last activity in that phase falls after the interim completion date.

3.3.5 Default Progress Data Disallowed

Actual Start and Finish dates shall not be automatically updated by default mechanisms that may be included in CPM scheduling software systems. Actual Start and Finish dates on the CPM schedule shall match those dates provided from Contractor Quality Control Reports. Failure of the Contractor to document the Actual Start and Finish dates on the Daily Quality Control report for every in progress or completed activity and insure that the data contained on the Daily Quality Control reports is the sole basis for schedule updating shall result in the disapproval of the Contractor's schedule and the inability of the Contracting Officer to evaluate Contractor progress for payment purposes.

3.3.6 Out-of-Sequence Progress

Activities that have posted progress without predecessors being completed (Out-of-Sequence Progress) shall be allowed only by the case-by-case approval of the Contracting Officer. The Contracting Officer may direct that changes in schedule logic be made to correct any or all out-of-sequence work.

3.3.7 Negative Lags

Lag durations contained in the project schedule shall not have a negative value.

3.4 PROJECT SCHEDULE SUBMISSIONS

The Contractor shall provide the submissions as described below. The data disk, reports, and network diagrams required for each submission are contained in paragraph SUBMISSION REQUIREMENTS.

3.4.1 Preliminary Project Schedule Submission

The Preliminary Project Schedule, defining the Contractor's planned operations for the first 60 calendar days shall be submitted for approval within 10 calendar days after Notice to Proceed is acknowledged. The approved preliminary schedule shall be used for payment purposes not to exceed 60 calendar days after Notice to Proceed.

3.4.2 Initial Project Schedule Submission

The Initial Project Schedule shall be submitted for approval within 40 calendar days after Notice to Proceed. The schedule shall provide a reasonable sequence of activities which represent work through the entire project and shall be at a reasonable level of detail.

3.4.3 Periodic Schedule Updates

Based on the result of progress meetings, specified in "Periodic Progress Meetings," the Contractor shall submit periodic schedule updates. These submissions shall enable the Contracting Officer or to assess Contractor's progress. If the Contractor fails or refuses to furnish the information and project schedule data, which in the judgment of the Contracting Officer or authorized representative, is necessary for verifying the contractor's progress, the Contractor shall be deemed not to have provided an estimate upon which progress payment may be made.

3.4.4 Standard Activity Coding Dictionary

The Contractor shall submit, with the Initial Project Schedule, a coding scheme that shall be used throughout the project for all activity codes contained in the schedule. The coding scheme submitted shall list the values for each activity code category and translate those values into project specific designations. For example, a Responsibility Code Value, "ELE", may be identified as "Electrical Subcontractor." Activity code values shall represent the same information throughout the duration of the contract. Once approved with the Initial Project Schedule submission, changes to the activity coding scheme must be approved by the Contracting Officer.

3.5 SUBMISSION REQUIREMENTS

The as noted in paragraph 1.1 items shall be submitted by the Contractor for the initial submission, and every periodic project schedule update throughout the life of the project (see paragraph 3.6):

3.5.1 Data Disks

Two data disks containing the project schedule shall be provided. Data on the disks shall be in the format specified in paragraph 3.10 NAS DATA.

3.5.1.1 File Medium

Required data shall be submitted on 3.5 disks, formatted to hold 1.44 MB of data, under the MS-DOS Version 5.0 operating system.

3.5.1.2 Disk Label

A permanent exterior label shall be affixed to each disk submitted. The label shall indicate the type of schedule (Initial, Update, or Change), full contract number, project name, project location, data date, name and telephone number or person responsible for the schedule, and the version used to prepare the C.P.M..

3.5.1.3 File Name

Each file submitted shall have a name related to either the schedule data date, project name, or contract number. The Contractor shall develop a naming convention that will insure that the names of the files submitted are unique. The Contractor shall submit the file naming convention to the Contracting Officer for approval.

3.5.2 Narrative Report

A Narrative Report shall be provided with each update of the project schedule. This report shall be provided as the basis of the Contractor's progress payment request. The Narrative Report shall include: a description of activities along the critical path, a description of current and anticipated problem areas or delaying factors and their impact, and an explanation of corrective actions taken.

3.5.3 Approved Changes Verification

Only project schedule changes that have been previously approved by the Contracting Officer shall be included in the schedule submission. The Narrative Report shall specifically reference, on an activity by activity basis, all changes made since the previous period and relate each change to documented, approved schedule changes.

3.5.4 Schedule Reports

The format for each activity for the schedule reports listed below shall contain: Activity Numbers, Activity Description, Original Duration, Remaining Duration, Early Start Date, Early Finish Date, Late Start Date, Late Finish Date, Total Float. Actual Start and Actual Finish Dates shall be printed for those activities in-progress or completed.

3.5.4.1 Activity Report

A list of all activities sorted according to activity number. For completed activities the Actual Start Date shall be used as the secondary sort.

3.5.4.2 Logic Report

A list of Preceding and Succeeding activities for every activity in ascending order by activity number and then sorted according to Early Start Date. For completed activities the Actual Start Date shall be used as the secondary sort.

3.5.4.3 Total Float Report

A list of all activities sorted in ascending order of total float. Activities which have the same amount of total float shall be listed in ascending order of Early Start Dates.

3.5.4.4 Earnings Report

A compilation of the Contractor's Total Earnings on the project from the Notice to Proceed until the most recent Monthly Progress Meeting. This report shall reflect the Earnings of specific activities based on the agreements made in the field and approved between the Contractor and Contracting Officer at the most recent Monthly Progress Meeting. Provided that the Contractor has provided a complete schedule update, this report shall serve as the basis of determining Contractor Payment. Activities shall be grouped by bid item and sorted by activity numbers. This report shall: sum all activities in a bid item and provide a bid item percent; complete and sum all bid items to provide a total project percent complete. The printed report shall contain, for each activity: Activity Number, Activity Description, Original Budgeted Amount, Total Quantity, Quantity to Date, Percent Complete (based on cost), Earnings to Date.

3.5.4.5 Cash Flow Report

A report showing scheduled cost of work-in-place by work (tabular report) and a cash flow curve by week (S-curve plot), both based on early dates.

3.5.5 Network Diagram

The time scaled network diagram shall be required on the initial schedule submission and on quarterly update submissions. The network diagram shall depict and display the order and interdependence of activities and the sequence in which the work is to be accomplished. The Contracting Officer will use, but is not limited to, the following conditions to review compliance with this paragraph:

3.5.5.1 Continuous Flow

Diagrams shall show a continuous flow from left to right with no arrows from right to left. The activity or event number, description, duration, and estimated earned value shall be shown on the diagram.

3.5.5.2 Project Milestone Dates

Dates shall be shown on the diagram for start of project, any contract required interim completion dates, and contract completion dates.

3.5.5.3 Critical Path

The critical path shall be clearly shown.

3.5.5.4 Banding

Activities shall be grouped to assist in the understanding of the activity sequence. Typically, this flow will group activities by category of work, work area and/or responsibility.

3.5.5.5 S-Curves

Earnings curves shall be provided showing projected early and late earnings and earnings to date.

3.6 PERIODIC PROGRESS MEETINGS

Progress meetings to discuss payment shall include a monthly on-site meeting or other regular intervals mutually agreed to at the preconstruction conference. During this meeting the Contractor will describe, on an activity by activity basis, all proposed revisions and adjustments to the project schedule required to reflect the current status of the project. The Contracting Officer will approve activity progress, proposed revisions, and adjustments as appropriate.

3.6.1 Meeting Attendance

The Contractor's Project Manager and Scheduler shall attend the regular progress meeting.

3.6.2 Update Submission Following Progress Meeting

A complete update of the project schedule containing all approved progress, revisions, and adjustments, based on the regular progress meeting, shall be submitted not later than 4 working days after the monthly progress meeting.

3.6.3 Progress Meeting Contents

Update information, including Actual Start Dates, Actual Finish Dates, Remaining Durations, and Cost to Date shall be subject to the approval of the Contracting Officer. The following minimum set of items which the Contractor shall address, on an activity by activity basis, during each progress meeting.

3.6.3.1 Start and Finish Dates

The Actual Start and Actual Finish dates for each activity currently in-progress or completed activities.

3.6.3.2 Time Completion

The estimated Remaining Duration for each activity in-progress. Time-based progress calculations must be based on Remaining Duration for each activity.

3.6.3.3 Cost Completion

The earnings for each activity started. Payment shall be based on earnings for each in-progress or completed activity. Payment for individual activities shall not be made for work that contains quality defects. A portion of the overall project amount may be retained based on delays of activities.

3.6.3.4 Logic Changes

All logic changes pertaining to Notice to Proceed on change orders, change orders to be incorporated into the schedule, contractor proposed changes in work sequence, corrections to schedule logic for out-of-sequence progress, lag durations, and other changes that have been made pursuant to contract provisions shall be specifically identified and discussed.

3.6.3.5 Other Changes

Other changes required due to delays in completion of any activity or group of activities are those delays beyond the Contractors control such as strikes and unusual weather. Also included are delays encountered due to submittals, Government Activities, deliveries or work stoppage which makes re-planning the work necessary, and when the schedule does not represent the actual prosecution and progress of the work.

3.7 REQUESTS FOR TIME EXTENSIONS

In the event the Contractor requests an extension of the contract completion date, he shall furnish such justification, project schedule data and supporting evidence as the Contracting Officer may deem necessary for a determination as to whether or not the Contractor is entitled to an extension of time under the provisions of the contract. Submission of proof of delay, based on revised activity logic, duration, and costs (updated to the specific date that the delay occurred) is obligatory to any approvals.

3.7.1 Justification of Delay

The project schedule must clearly display that the Contractor has used, in full, all the float time available for the work involved with this request. The Contracting Officer's determination as to the number of allowable days of contract extension, shall be based upon the project schedule updates in effect for the time period in question and other factual information. Actual delays that are found to be caused by the Contractor's own actions, which result in the extension of the schedule, shall not be a cause for a time extension to the contract completion date.

3.7.2 Submission Requirements

The Contractor shall submit a justification for each request for a change in the contract completion date of under two weeks based upon the most recent schedule update at the time of the Notice to Proceed or constructive direction issued for the change. Such a request shall be in accordance with the requirements of other appropriate Contract Clauses and shall include, as a minimum:

a. A list of affected activities, with their associated project schedule activity number.

b. A brief explanation of the causes of the change.

c. An analysis of the overall impact of the changes proposed.

d. A sub-network of the affected area.

Activities impacted in each justification for change shall be identified by a unique activity code contained in the required data file.

3.7.3 Additional Submission Requirements

For any request for time extension for over 2 weeks, the Contracting Officer may request an interim update with revised activities for a specific change request. The Contractor shall provide this disk within 4 days of the Contracting Officer's request.

3.8 DIRECTED CHANGES

If Notice to Proceed (NTP) is issued for changes prior to settlement of price and/or time, the Contractor shall submit proposed schedule revisions to the Contracting Officer within 2 weeks of the NTP being issued. The proposed revisions to the schedule will be approved by the Contracting Officer prior to inclusion of those changes within the project schedule. If the Contractor fails to submit the proposed revisions, the Contracting Officer may furnish the Contractor suggested revisions to the project schedule. The Contractor shall include these revisions in the project schedule until the Contractor submits revisions, and final changes and impacts have been negotiated. If the Contractor has any objections to the revisions furnished by the Contracting Officer, then the Contractor shall advise the Contracting Officer within 2 weeks of receipt of the revisions. Regardless of the objections, the Contractor will continue to update their schedule with the Contracting Officer's revisions until a mutual agreement in the revisions may be made. If the Contractor fails to submit alternative revisions within 2 weeks of receipt of the Contracting Officer's proposed revisions, the Contractor will be deemed to have concurred with the Contracting Officer's proposed revisions. The proposed revisions will then be the basis for an equitable adjustment for performance of the work.

3.9 OWNERSHIP OF FLOAT

Float available in the schedule, at any time, shall not be considered for the exclusive use of either the Government or the Contractor.

3.10 NAS DATA

The Contractor shall provide the Government with the means electronically transfer all required NAS data into its ADP equipment and schedule software, such that it can independently obtain and process the information. The Contractor may use network analysis software different from that used by the Contracting Officer in the Resident Office. Under this alternative, the Contractor shall furnish the following:

NAS data that complies with the Scheduling System Data Exchange Format (SDEF). This is a standard ASCII format for exchanging scheduling data and is compatible with our resident management system. Many software developers are using SDEF. The SDEF specifications are in a separate publication, from the Internet WWW.CECER.AARMY.MIL/PL/SDEF.

-- END OF SECTION --

SECTION 01330

SUBMITTAL PROCEDURES

PART 1 GENERAL

INTRODUCTION Design submittal activities shall follow the guide lines presented in Section 00810 Design-Build Contract Procedures. All correspondence shall follow the guidance of Section 01001 Supplementary Requirements, paragraph 1.3 Correspondence. The following guidance is to be followed for all construction related submittals, all submittals required in Division 1 specifications and all submittals identified in Section 00860 Statement of Work as requiring Contracting Officer approval.

1.1 CONTROL AND SCHEDULING OF SUBMITTALS

1.1.1 Submittal Coordination Meeting

After the preconstruction conference and before any submittals are sent to the Contracting Officer's Representative (COR), with the exception of Division 1 submittals, the Contractor shall meet with the COR to develop an approved preliminary submittal register, ENG Form 4288. During the meeting all required items will be identified and grouped into three categories:

- Government Approved (GA)

Government approval is required for extensions of design, critical materials, variations/deviations, an "or equal" decision, equipment whose compatibility with the entire system must be checked, architectural items such as Color Charts/Patterns/Textures, and other items as designated by the COR. Within the terms of the Contract Clause entitled "Specifications and Drawings for Construction," these submittals will be acted on as "shop drawings."

- For Information Only (FIO)

Submittals not requiring Government approval will be for information only. These are items such as Installation Procedures, Certificates of compliance, Samples, Qualifications, etc. Within the terms of the Contract Clause entitled "Specifications and Drawings for Construction," these submittals will not be acted on as "shop drawings."

- Those items that can be visually inspected by the Contractor's Quality Control Representative (CQC) on site or are provided to the Government other than with an ENG Form 4025: The items that fall into this category shall remain on the register but shall not be submitted to the COR. For these items, the "Classification" column on the submittal register shall remain blank.

1.1.2 Final Submittal Register

The final submittal register shall be coordinated with the progress schedule and submitted within 30 days of Notice to Proceed. In preparing the final document, adequate time (minimum of 30 days) shall be allowed for review and approval, and possible resubmittal of each item on the register.

1.1.3 Submittal Register Updates

The Contractor's quality control representative shall review the listing at least every 30 days and take appropriate action to maintain an effective system. Copies of updated or corrected listings shall be submitted to the COR at least every 30 days in the quantity specified.

1.2 SUBMITTAL TYPES

Throughout these specifications submittals may be identified with the prefix "SD" (submittal data) followed by a number (category, i.e., data, drawings, reports, etc.). This is for bookkeeping and record sorting in the system:

SD-01 Data

Submittals which provide calculations, descriptions, or documentation regarding the work.

SD-04 Drawings

Submittals which graphically show relationship of various components of the work, schematic diagrams of systems, details of fabrication, layouts of particular elements, connections, and other relational aspects of the work.

SD-06 Instructions

Preprinted material describing installation of a product, system or material, including special notices and material safety data sheets, if any, concerning impedances, hazards, and safety precautions.

SD-07 Schedules

Tabular lists showing location, features, or other pertinent information regarding products, materials, equipment, or components to be used n the work.

SD-08 Statements

A document, required of the Contractor, or through the Contractor from a subcontractor, supplier, installer, or manufacturer to confirm the quality or orderly progression of a portion of the work by documenting procedures, acceptability of methods or personnel, qualifications, or other quality verifications.

SD-09 Reports

Reports of inspections or tests, including analyses and interpretation of test results. Each report shall be properly identified. Test methods used shall be identified and test results shall be recorded.

SD-13 Certificates

Statement signed by an official authorized to certify on behalf of the manufacturer that a product, system or material meets specified requirements. The statement must be dated after the award of this contract and state the Contractor's name and address, project and location, and list specific requirements which are being certified.

SD-14 Samples

Fabricated and/or unfabricated physical examples of materials, products, and/or units of work as complete units or as portions of units.

SD-18 Records

Documentation to record compliance with technical or administrative requirements.

SD-19 Operation and Maintenance Manuals

Data which forms a part of an operation and maintenance manual.

Submittals required by the Contract Clauses and other non-technical parts of the contract are not necessarily included in this section. These type of submittals can be added to the register before or during the submittal coordination meeting.

1.3 APPROVED SUBMITTALS

The approval of submittals by the COR shall not be construed as a complete check, but will indicate only that the general method of construction, materials, detailing and other information are satisfactory. Approval will not relieve the Contractor of the responsibility for any error which may exist. The Contractor, under the CQC requirements of this contract, is responsible for the dimensions and design of adequate connections, details, and satisfactory construction of all work. After submittals have been approved by the COR, no resubmittal for the purpose of substituting materials or equipment will be given consideration.

1.4 DISAPPROVED SUBMITTALS

The Contractor shall make all corrections required by the COR and promptly furnish a corrected submittal in the format and number of copies specified for the initial submittal. If the Contractor considers any correction indicated on the submittals to constitute a change

to the contract, written notice, as required under the Contract Clause entitled "Changes," shall be given to the COR.

1.5 PAYMENT

Separate payment will not be made for submittals, and all costs associated therein shall be included in the applicable unit prices or lump sum prices contained in the schedule. Payment will not be made for any material or equipment which does not comply with contract requirements.

PART 2 PRODUCTS (Not Applicable)

PART 3 EXECUTION

3.1 GENERAL

Prior to submittal, all items shall be checked and approved by the Contractor's CQC and each item of the submittal shall be stamped, signed, and dated. Each respective transmittal form (ENG Form 4025) shall be signed and dated by the CQC certifying that the accompanying submittal complies with the contract requirements. This procedure applies to all submittals. Submittals shall include items such as: Contractor's, manufacturer's, or fabricator's drawings; descriptive literature including, but not limited to, catalog cuts, diagrams; operating charts or curves; test reports; test cylinders; samples; O&M manuals including parts lists; certifications; warranties and other such required items. Units of weights and measures used on all submittals shall be the same as the contract drawings. Each submittal shall be complete and in sufficient detail to allow ready determination of compliance with contract requirements. GA submittals shall be scheduled and made prior to the acquisition of the material or equipment covered thereby. The COR may request submittals in addition to those listed when deemed necessary to adequately describe the work covered in the respective sections. The Contractor shall maintain a complete and up-to-date file of all submittals/items on site for use by both the Contractor and the Government.

3.2 SUBMITTAL REGISTER (ENG Form 4288)

The submittal register - ENG Form 4288 – for Divisions 1 through 16 shall be developed by the Contractor prior to the submittal coordination meeting and list each item of equipment and material or data for which submittals are required in the Technical Specifications. (See paragraph SUBMITTALS at the beginning of each specification section.) The Contractor shall approve all items listed on the submittal register. During the submittal coordination meeting, the preliminary submittal register will be reviewed and annotated. When the final submittal register is submitted for approval, the Contractor shall complete the column entitled “Item No.” and all data under “Contractor Schedule Dates” and return five completed copies to the COR for approval. The Contractor shall review the list to ensure its completeness and may expand general category listings to show individual entries for each item. The numbers in column “Item No.” are to be assigned sequentially

starting with "1" for each specification section. DO NOT preassign transmittal numbers when preparing the submittal register. When a conflict exists between the submittal register and a submittal requirement in the technical sections, other than those submittals referenced in Paragraph 3.9: Field Test Reports, the approved submittal register shall govern. The preliminary, and then the final approved submittal register, will become the scheduling document and will be updated monthly and used to control submittals throughout the life of the contract. Names and titles of individuals authorized by the Contractor to approve shop drawings shall be submitted to COR with the final ENG 4288 form. Supplier or subcontractors certifications are not acceptable as meeting this requirement. (Blank ENG Form 4288 is attached at the end of this specification.)

3.3 SCHEDULING

Submittals covering component items forming a system, or items that are interrelated, shall be coordinated and submitted concurrently. Certifications shall be submitted together with other pertinent information and/or drawings. Additional processing time beyond 30 days, or number of copies, may be shown by the COR on the submittal register attached in the “Remarks” column, or may be added by the COR during the coordination meeting. No delays damages or time extensions will be allowed for time lost due to the Contractor not properly scheduling and providing submittals.

3.4 TRANSMITTAL FORM (ENG Form 4025)

Transmittal Form 4025 (sample at end of this section) shall be used for submitting both GA and FIO submittals in accordance with the instructions on the reverse side of the form. Transmittal numbers shall be assigned sequentially. Electronic generated 4025 forms shall be printed on carbonless paper and be a reasonable facsimile of the original 4025. If electronic forms are not used, the original 4025 forms shall be used (do not photo copy) and will be furnished by the COR. These forms shall be filled in completely prior to submittal. Special care shall be exercised to ensure proper listing of the specification paragraph and/or sheet number of the contract drawings pertinent to the data submitted for each item.. Each submittal item shall be listed separately on the form, naming subcontractor, supplier, or manufacturer, applicable specification paragraph number(s), drawing/sheet number, pay item number, and any other information needed to identify the item, define its use, and locate it in the work. One or more 4025 forms may be used per specification section, however, DO NOT include more than one specification section per transmittal.

3.5 CROSS-REFERENCE (ENG FORM 4288/ENG FORM 4025)

To provide a cross-reference between the approved submittal register and transmittal forms, the Contractor shall record the "transmittal numbers" assigned when submitting items in column “Transmittal No.” of the ENG FORM 4288. The item numbers in column “Item No.” of submittal register shall correspond to the item numbers on ENG Form 4025.

3.6 SUBMITTAL PROCEDURE

3.6.1 General

Shop drawings with 4025 forms shall be submitted in the number of copies specified in subparagraphs "Government Approved Submittals" and "Information Only Submittals," or as indicated on the submittal register in the “Remarks” column. Submit a complete collated “reviewers copy” with one 4025 form and attachments (not originals). The remaining copies (4 for GA, 2 for FIO) of 4025 forms and attachments shall not be collated. This would not apply to a series of drawings.

3.6.2 Approval of Submittals by the Contractor

Before submittal to the COR, the Contractor shall review and correct shop drawings prepared by subcontractors, suppliers, and itself, for completeness and compliance with plans and specifications. The Contractor shall not use red markings for correcting material to be submitted. Red markings are reserved for COR’s use. Approval by the Contractor shall be indicated on each shop drawing by an approval stamp containing information as shown in this section. Submittals not conforming to the requirements of this section will be returned to the Contractor for correction and resubmittal.

3.6.3 Variations

For submittals which include proposed variations requested by the Contractor, column “h” of ENG Form 4025 shall be checked and the submittal shall be classified as GA, and submitted accordingly. The Contractor shall set forth in writing the justification for any variations and annotate such variations on the transmittal form in the REMARKS block. Variations are not approved unless there is an advantage to the Government. The Government reserves the right to rescind inadvertent approval of submittals containing unnoted variations.

3.6.4 Drawings

Each drawing shall be not larger than A1 size (841 mm wide by 594 mm high), with a title block in lower right hand corner and a 75 mm by 100 mm clear area adjacent. The title block shall contain the subcontractor's or fabricator's name, contract number, description of item(s), bid item number, and a revision block. Provide a blank margin of 20 mm at bottom, 50 mm at left, and 10 mm at top and right. Where drawings are submitted for assemblies of more than one piece of equipment or systems of components dependent on each other for compatible characteristics, complete information shall be submitted on all such related components at the same time. The Contractor shall ensure that information is complete and that sequence of drawing submittal is such that all information is available for reviewing each drawing. Drawings for all items and equipment, of special manufacture or fabrication, shall consist of complete assembly and detail drawings. All revisions after initial submittal shall be shown by number, date, and subject in revision block.

3.6.4.1 Submittals Containing Drawings Larger than A3 size, (297 mm high by 420 mm wide)

For GA submittals containing drawings larger than A3 size, one reproducible and one blue line copy will be required to be submitted with five copies of the ENG Form 4025. The marked-up reproducible (and/or any review comments contained on the page-size comment sheet(s) at the Government's option) will be returned to the Contractor upon review. Three copies of blue line drawings (generated from the reviewed reproducible) will be provided to the Government within 10 days of Contractor's receipt of the reviewed reproducible. The Contractor shall not incorporate approved work into the project until the Government has received the three blue line copies. The Contractor shall use the marked-up reproducible to make any additional copies as needed. For FIO submittals, one reproducible and two blue line copies will be required to be submitted with the appropriate number of copies of ENG Form 4025.

3.6.5 Printed Material

All requirements for shop drawings shall apply to catalog cuts, illustrations, printed specifications, or other data submitted, except that the 75 mm by 100 mm clear area adjacent to the title block is not mandatory. Inapplicable portions shall be marked out and applicable items such as model numbers, sizes, and accessories shall be indicated by arrow or highlighted.

3.7 SAMPLES REQUIRING LABORATORY ANALYSIS

See Section 01451CONTRACTOR QUALITY CONTROL for procedures and address for samples requiring Government testing.

3.8 SAMPLES REQUIRING VISUAL INSPECTION

Samples requiring only physical inspection for appearance and suitability shall be coordinated with the on-site Government quality assurance representative (QAR).

3.9 FIELD TEST REPORTS

Routine tests such as soil density, concrete deliveries, repetitive pressure testing shall be delivered to the QAR with the daily Quality Control reports. See SECTION: 01451 CONTRACTOR QUALITY CONTROL.

3.10 CONTROL OF SUBMITTALS

The Contractor shall carefully control his procurement operations to ensure that each individual submittal is made on or before the Contractor scheduled submittal date shown on the approved "Submittal Register."

3.11 GOVERNMENT APPROVED SUBMITTALS (GA)

The Contractor shall submit 5 copies of GA submittals with 5 corresponding 4025 forms. Upon completion of GA submittal review, copies as specified below will be marked with an

action code, dated, and returned to the Contractor. See “Drawings” above for special instructions if drawings larger than size A3 are used.

3.11.1 Processing of GA Submittals

Submittals will be reviewed and processed as follows:

a. Approved as Submitted (Action Code "A"): Shop drawings which can be approved without correction will be stamped "Approved" and two copies will be returned to the Contractor. No resubmittal required.

b. Approved Except as Noted (Action Code "B"): Shop drawings which have only minor discrepancies will be annotated in red to indicate necessary corrections. Marked material will be stamped "Approved Except as Noted" and two copies returned to the Contractor for correction. No resubmittal required.

c. Approved Except as Noted (Action Code "C"): Shop drawings which are incomplete or require more than minor corrections will be annotated in red to indicate necessary corrections. Marked material will be stamped "Approved Except as Noted - Resubmission Required" and two copies returned to the Contractor for correction. Resubmittal of only those items needing correction required.

d. Disapproved (Action Code "E"): Shop drawings which are fundamentally in error, cover wrong equipment or construction, or require extensive corrections, will be returned to the Contractor stamped "Disapproved." An explanation will be furnished on the submitted material or on ENG Form 4025 indicating reason for disapproval. Complete resubmittal required.

e. Resubmittal will not be required for shop drawings stamped "A" or "B" unless subsequent changes are made by Contractor or a contract modification. For shop drawings stamped "C" or "E," Contractor shall make corrections required, note any changes by dating the revisions to correspond with the change request date, and promptly resubmit the corrected material. Resubmittals shall be associated with the “parent” by use of sequential alpha characters (for example, resubmittal of transmittal 8 will be 8A, 8B, etc). Government costs incurred after the first resubmittal may be charged to the Contractor.

3.12 INFORMATION ONLY SUBMITTALS (FIO)

The Contractor shall submit three copies of data and four copies of ENG Form 4025. FIO submittals will not be returned. Government approval is not required on FIO submittals. These submittals will be used for information purposes. The Government reserves the right to require the Contractor to resubmit any item found not to comply with the Contract. This does not relieve the Contractor from the obligation to furnish material conforming to the plans and specifications and will not prevent the COR from requiring removal and replacement if nonconforming material is incorporated in the work. This does not relieve the Contractor of the requirement to furnish samples for testing by the Government

laboratory or check testing by the Government in those instances where the technical specifications so prescribe.

3.12.1 Processing of FIO Submittals

FIO submittals shall be submitted prior to delivery of the material or equipment to the job site. ENG Form 4025 shall be marked with the words "contractor approved - information copy only" in the REMARKS block of the form. Submittals will be monitored and spot checks made. When such checks indicate noncompliance, the Contractor will be notified by the same method used for GA submittals. Resubmittal of nonconforming FIO submittals shall be reclassified GA and shall be in five copies.

3.13 CONTRACTOR APPROVAL STAMP

The stamp used by the Contractor on the submittal data to certify that the submittal meets contract requirements shall be similar to the following:

CONTRACTOR: _____

CONTRACT NUMBER _____

TRANSMITTAL NUMBER _____

ITEM NUMBER _____

SPECIFICATION SECTION _____

PARAGRAPH NUMBER _____

_____ APPROVED AS SUBMITTED
_____ APPROVED WITH CORRECTIONS AS NOTED

SIGNATURE: _____

TITLE: _____

DATE _____

CONTRACTORS REVIEW STAMP

MAXIMUM SIZE:

3 INCHES BY 3 INCHES

TRANSMITTAL OF SHOP DRAWINGS, EQUIPMENT DATA, MATERIAL SAMPLES, OR MANUFACTURER'S CERTIFICATES OF COMPLIANCE *(Read instructions on the reverse side prior to initiating this form)*	DATE	TRANSMITTAL NO.

SECTION I - REQUEST FOR APPROVAL OF THE FOLLOWING ITEMS *(This section will be initiated by the contractor)*

TO:	FROM:	CONTRACT NO.	CHECK ONE: ☐ THIS IS A NEW TRANSMITTAL ☐ THIS IS A RESUBMITTAL OF TRANSMITT/_____
SPECIFICATION SEC. NO. *(Cover only one section with each transmittal)*	PROJECT TITLE AND LOCATION		CHECK ONE: THIS TRANSMITTAL IS FOR ☐ FIO ☐ GOV'T. APPROVAL

ITEM NO. *a.*	DESCRIPTION OF ITEM SUBMITTED *(Type size, model number/etc.)* *b.*	MFG OR CONTR. CAT., CURVE DRAWING OR BROCHURE NO. *(See instruction no. 8)* *c.*	NO. OF COPIES *d.*	CONTRACT REFERENCE DOCUMENT: SPEC. PARA. NO. *e.*	CONTRACT REFERENCE DOCUMENT: DRAWING SHEET NO. *f.*	FOR CONTRACTOR USE CODE *g.*	VARIATION *(See instruction No. 8)* *h.*	FOR CE USE CODE *i.*

REMARKS

I certify that the above submitted items have been reviewed in detail and are correct and in strict conformance with the contract drawings and specifications except as otherwise stated.

_____
NAME AND SIGNATURE OF CONTRACTOR

SECTION II - APPROVAL ACTION

ENCLOSURES RETURNED *(List by Item No.)*	NAME, TITLE AND SIGNATURE OF APPROVING AUTHORITY	DATE

ENG FORM 4025-R, MAR 95 *(ER 415-1-10)* EDITION OF SEP 93 IS OBSOLETE. SHEET ___ OF ___ (Reverse) CEMPCR

INSTRUCTIONS

1. Section I will be initiated by the Contractor in the required number of copies.

2. Each transmittal shall be numbered consecutively in the space provided for "Transmittal No.". This number, in addition to the contract number, will form a serial number for identifying each submittal. For new submittals or resubmittals mark the appropriate box; on resubmittals, insert transmittal number of last submission as well as the new submittal number.

3. The "Item No." will be the same "Item No." as indicated on ENG FORM 4288-R for each entry on this form.

4. Submittals requiring expeditious handling will be submitted on a separate form.

5. Separate transmittal form will be used for submittals under separate sections of the specifications.

6. A check shall be placed in the "Variation" column when a submittal is not in accordance with the plans and specifications--also, a written statement to that effect shall be included in the space provided for "Remarks".

7. Form is self-transmittal, letter of transmittal is not required.

8. When a sample of material or Manufacturer's Certificate of Compliance is transmitted, indicate "Sample" or "Certificate" in column c, Section I.

9. U.S. Army Corps of Engineers approving authority will assign action codes as indicated below in space provided in Section I, column i to each item submitted. In addition they will ensure enclosures are indicated and attached to the form prior to return to the contractor. The Contractor will assign action codes as indicated below in Section I, column g, to each item submitted.

THE FOLLOWING ACTION CODES ARE GIVEN TO ITEMS SUBMITTED

A	--	Approved as submitted.	E	--	Disapproved (See attached).
B	--	Approved, except as noted on drawings.	F	--	Receipt acknowledged.
C	--	Approved, except as noted on drawings. Refer to attached sheet resubmission required.	FX	--	Receipt acknowledged, does not comply as noted with contract requirements.
D	--	Will be returned by separate correspondence.	G	--	Other *(Specify)*

10. Approval of items does not relieve the contractor from complying with all the requirements of the contract plans and specifications.

(Reverse of ENG Form 4025-R)

SUBMITTAL REGISTER

(ER 415-1-10)

CONTRACT NUMBER

TITLE AND LOCATION: (99077) FY00 144 Person Dormitory, Malmstrom AFB, NZAS 9390101C

CONTRACTOR

SPECIFICATION SECTION

				TYPE OF SUBMITTAL									CLASSIFICATION			CONTRACTOR SCHEDULE DATES			CONTRACTOR ACTION			GOVERNMENT ACTION		
TRANSMITTAL NO	ITEM NO	SPECIFICATION PARAGRAPH NUMBER	DESCRIPTION OF ITEM SUBMITTED	DATA	DRAWINGS	INSTRUCTIONS	SCHEDULES	STATEMENTS	REPORTS	CERTIFICATES	SAMPLES	RECORDS	INFORMATION ONLY	GOVERNMENT APPROVED	REVIEWER	SUBMIT	APPROVAL NEEDED BY	MATERIAL NEEDED BY	CODE	DATE	SUBMIT TO GOVERNMENT	CODE	DATE	REMARKS
a.	b.	c.	d.	e.	f.	g.	h.	i.	j.	k.	l.	m.	n.	o.	p.	q.	r.	s.	t.	u.	v.	w.	x.	y.

ENG FORM 4288, MAY 91

EDITION OF AUG 89 IS OBSOLETE

PAGE__ OF __ PAGES

SECTION 01415

METRIC MEASUREMENTS

1.1 REFERENCES

The publications listed below form a part of this specification to the extent referenced. The publications are referred to in the text by basic designation only.

AMERICAN SOCIETY FOR TESTING AND MATERIALS (ASTM)

ASTM E 380 (1993) Practice for Use of the International System of Units (SI)

ASTM E 621 (1994) Practice for Use of Metric (SI) Units in Building Design and Construction

1.2 GENERAL

This project includes metric units of measurements. The metric units used are the International System of Units (SI) developed and maintained by the General Conference on Weights and Measures (CGPM); the name International System of Units and the international abbreviation SI were adopted by the 11th CGPM in 1960. A number of circumstances require that both metric SI units and English inch-pound (I-P) units be included in a section of the specifications. When both metric and I-P measurements are included, the section may contain measurements for products that are manufactured to I-P dimensions and then expressed in mathematically converted metric value (soft metric) or, it may contain measurements for products that are manufactured to an industry recognized rounded metric (hard metric) dimensions but are allowed to be substituted by I-P products to comply with the law. Dual measurements are also included to indicate industry and/or Government standards, test values or other controlling factors, such as the code requirements where I-P values are needed for clarity or to trace back to the referenced standards, test values or codes. For American Society for Testing and Materials (ASTM) references in the technical specifications, the Contractor shall use the metric publication, if one is available (For example: ASTM A 36, use ASTM A 36M). An acceptable substitute to hard Metric SI Concrete Masonry Units (CMU) and Recessed Lighting Fixtures (RLF) is English in-pound (soft metric) CMU and RLF. The Contractor shall be responsible for any adjustments required to accommodate these alternative English in-pound units at no additional cost to the Government.

1.3 USE OF MEASUREMENTS

Measurements shall be either in SI or I-P units as indicated, except for soft metric measurements or as otherwise authorized. The Contractor shall be responsible for all associated labor and materials when authorized to substitute one system of units for another and for the final assembly and performance of the specified work and/or products.

1.3.1 Hard Metric

A hard metric measurement is indicated by an SI value with no expressed correlation to an I-P value, i.e., where an SI value is not an exact mathematical conversion of an I-P value, such as the use of 100 mm in lieu of 4 inches. Hard metric products are required when only metric dimensions are indicated, except for Contractor's options as outlined in paragraph GENERAL above. Hard metric measurements are often used for field data such as distance from one point to another or distance above the floor. Products are considered to be hard metric when they are manufactured to metric dimensions or have an industry recognized metric designation.

1.3.2 Soft Metric

a. A soft metric measurement is indicated by an SI value which is a mathematical conversion of the I-P value shown in parentheses e.g. 38.1 mm (1-1/2 inches). Soft metric measurements are used for measurements pertaining to products, test values, and other situations where the I-P units are the standard for manufacture, verification, or other controlling factor. The I-P value shall govern while the metric measurement is provided for information.

b. A soft metric measurement is also indicated for products that are manufactured in industry designated metric dimensions but are required by law to allow substitute I-P products. These measurements are indicated by a manufacturing hard metric product dimension followed by the substitute I-P equivalent value in parentheses e.g., 190 x 190 x 390 mm (7-5/8 x 7-5/8 x 15-5/8 inches).

1.3.3 Neutral

A neutral measurement is indicated by an identifier which has no expressed relation to either an SI or an I-P value (e.g., American Wire Gage (AWG) which indicates thickness but in itself is neither SI nor I-P).

1.4 COORDINATION

Discrepancies, such as mismatches or product unavailability, arising from use of both metric and non-metric measurements and discrepancies between the measurements in the specifications and the measurements in the drawings shall be brought to the attention of the Contracting Officer for resolution.

1.5 RELATIONSHIP TO SUBMITTALS

Submittals for Government approval or for information only shall cover the SI or I-P products actually being furnished for the project. The Contractor shall submit the required drawings and calculations in the same units used in the contract documents describing the product or requirement unless otherwise instructed or approved. The Contractor shall use ASTM E

380 and ASTM E 621 as the basis for establishing metric measurements required to be used in submittals.

END FOF SECTION

This page intentionally blank

SECTION 01451

CONTRACTOR QUALITY CONTROL

PART 1 GENERAL

1.1 REFERENCES

The publications listed below form a part of this specification to the extent referenced. The publications are referred to in the text by basic designation only.

AMERICAN SOCIETY FOR TESTING AND MATERIALS (ASTM)

ASTM D 3740	(1996) Minimum Requirements for Agencies Engaged in the Testing and/or Inspection of Soil and Rock as Used in Engineering Design and Construction
ASTM E 329	(1995b) Agencies Engaged in the Testing and/or Inspection of Materials Used in Construction

1.2 PAYMENT

Separate payment will not be made for providing and maintaining an effective Quality Control program, and all costs associated therewith shall be included in the applicable unit prices or lump-sum prices contained in the Bidding Schedule.

PART 2 PRODUCTS (NOT APPLICABLE)

PART 3 EXECUTION

3.1 GENERAL

The Contractor is responsible for quality control and shall establish and maintain an effective quality control system in compliance with the Contract Clause titled "Inspection of Construction" (See section 00700). The quality control system shall consist of plans, procedures, and organization necessary to produce an end product which complies with the contract requirements. The system shall cover all construction operations, both onsite and offsite, and shall be keyed to the proposed construction sequence. The project superintendent will be held responsible for the quality of work on the job and is subject to removal by the Contracting Officer for non-compliance with quality requirements specified in the contract. The project superintendent in this context shall

mean the individual with the responsibility for the overall management of the project including quality and production.

3.2 QUALITY CONTROL PLAN

3.2.1 General

The Contractor shall furnish for review by the Government, not later than 10 days after receipt of notice to proceed, the Contractor Quality Control (CQC) Plan proposed to implement the requirements of the Contract Clause titled "Inspection of Construction." The plan shall identify personnel, procedures, control, instructions, test, records, and forms to be used. The Government will consider an interim plan for the first 30 days of operation. Design work is to begin after the predesign meeting (see Section 00810 Design-Build Contract Procedures). Construction will be permitted to begin only after acceptance of the CQC Plan for the construction phase of the contract or acceptance of an interim plan applicable to the particular feature of work to be started. Work outside of the features of work included in an accepted interim plan will not be permitted to begin until acceptance of a CQC Plan or another interim plan containing the additional features of work to be started.

3.2.2 Content of the CQC Plan

The CQC Plan shall include, as a minimum, the following to cover all construction operations, both onsite and offsite, including work by subcontractors, fabricators, suppliers, and purchasing agents:

a. A description of the quality control organization, including a chart showing lines of authority and acknowledgment that the CQC staff shall implement the three phase control system for all aspects of the work specified. The staff shall include a CQC System Manager who shall report to the project manager. If the project manager and project superintendent are the same person, the CQC System Manager shall report to someone higher in the Contractor's organization than the project manager.

b. The name, qualifications (in resume format), duties, responsibilities, and authorities of each person assigned a CQC function.

c. A copy of the letter to the CQC System Manager signed by an authorized official of the firm which describes the responsibilities and delegates sufficient authorities to adequately perform the functions of the CQC System Manager, including authority to stop work which is not in compliance with the contract. The CQC System Manager shall issue letters of direction to all other various quality control representatives outlining duties, authorities, and responsibilities. Copies of these letters shall also be furnished to the Government.

d. Procedures for scheduling, reviewing, certifying, and managing submittals, including those of subcontractors, offsite fabricators, suppliers, and purchasing agents. These procedures shall be in accordance with Section 01330 SUBMITTAL PROCEDURES.

e. Control, verification, and acceptance testing procedures for each specific test to include the test name, specification paragraph requiring test, feature of work to be tested, test frequency, and person responsible for each test. (Laboratory facilities will be approved by the Contracting Officer.)

f. Procedures for tracking preparatory, initial, and follow-up control phases and control, verification, and acceptance tests including documentation.

g. Procedures for tracking construction deficiencies from identification through acceptable corrective action. These procedures shall establish verification that identified deficiencies have been corrected.

h. Reporting procedures, including proposed reporting formats.

i. A list of the definable features of work. A definable feature of work is a task which is separate and distinct from other tasks, has separate control requirements, and may be identified by different trades or disciplines, or it may be work by the same trade in a different environment. Although each section of the specifications may generally be considered as a definable feature of work, there are frequently more than one definable features under a particular section. This list will be agreed upon during the coordination meeting.

3.2.3 Acceptance of Plan

Acceptance of the Contractor's plan is required prior to the start of construction. Acceptance is conditional and will be predicated on satisfactory performance during the construction. The Government reserves the right to require the Contractor to make changes in his CQC Plan and operations including removal of personnel, as necessary, to obtain the quality specified.

3.2.4 Notification of Changes

After acceptance of the CQC Plan, the Contractor shall notify the Contracting Officer in writing of any proposed change. Proposed changes are subject to acceptance by the Contracting Officer.

3.3 COORDINATION MEETING

After the Predesign Meeting, before start of construction, and prior to acceptance by the Government of the CQC Plan, the Contractor shall meet with the Contracting Officer or

Authorized Representative and discuss the Contractor's quality control system. The CQC Plan shall be submitted for review a minimum of 5 calendar days prior to the Predesign Meeting. During the meeting, a mutual understanding of the system details shall be developed, including the forms for recording the CQC operations, control activities, testing, administration of the system for both onsite and offsite work, and the interrelationship of Contractor's Management and control with the Government's Quality Assurance. Minutes of the meeting shall be prepared by the Government and signed by both the Contractor and the Contracting Officer. The minutes shall become a part of the contract file. There may be occasions when subsequent conferences will be called by either party to reconfirm mutual understandings and/or address deficiencies in the CQC system or procedures which may require corrective action by the Contractor.

3.4 QUALITY CONTROL ORGANIZATION

3.4.1 Design: Architect of Record

Design quality assurance shall be the responsibility of the Architect who will seal all drawings and specifications as the “Architect of Record.” He shall also be the final approval authority for shop drawings and any other tests and submittals effecting the final design. The design quality management system shall require professional engineering designers other than the designer to review and approve (seal) all engineering calculations and designs unless otherwise approved by the Contracting Officer.

3.4.2 Construction: General

The requirements for the CQC organization are a CQC System Manager and sufficient number of additional qualified personnel to ensure contract compliance. The Contractor shall provide a CQC organization which shall be at the site at all times during progress of the work and with complete authority to take any action necessary to ensure compliance with the contract. All CQC staff members shall be subject to acceptance by the Contracting Officer.

3.4.3 CQC System Manager

The Contractor shall identify as CQC System Manager an individual within the onsite work organization who shall be responsible for overall management of CQC and have the authority to act in all CQC matters for the Contractor. The CQC System Manager shall be a graduate engineer, graduate architect, or a graduate of construction management, with a minimum of 5 years construction experience on construction similar to this contract or a construction person with a minimum of 10 years in related work. This CQC System Manager shall be on the site at all times during construction and shall be employed by the prime Contractor. The CQC System Manager shall be assigned no other duties. An alternate for the CQC System Manager shall be identified in the plan to serve in the event of the System Manager's absence. The requirements for the alternate shall be the same as for the designated CQC System Manager.

3.4.4 Additional Requirement

In addition to the above experience education requirements the CQC System Manager shall have completed the course entitled "Construction Quality Management For Contractors". This course is periodically offered at AGC offices throughout the state of Washington and Oregon.

3.4.5 Organizational Changes

The Contractor shall maintain the CQC staff at full strength at all times. When it is necessary to make changes to the CQC staff, the Contractor shall revise the CQC Plan to reflect the changes and submit the changes to the Contracting Officer for acceptance.

3.5 SUBMITTALS

The Contractor shall prepare a submittal register and submit it for approval to the Contracting Officer prior to start of construction. This register is to follow the general guidance provided in Section 01330 SUBMITTAL PROCEDURES and shall list all proposed submittals and tests for purchased materials and equipment, and for all subcontracts. The CQC organization shall be responsible for certifying that all submittals are in compliance with the contract requirements. The Government will furnish copies of test report forms (See Table 2) upon request by the Contractor. The Contractor may use other forms as approved. The Contractor shall maintain these records at the site and they shall be furnished or made available to the Contracting Officer or his designated representatives when so directed.

3.6 CONTROL

Contractor Quality Control is the means by which the Contractor ensures that the construction, to include that of subcontractors and suppliers, complies with the requirements of the contract. The controls shall be adequate to cover all construction operations, including both on-site and off-site fabrication, and shall be keyed to the proposed construction sequence. At least three phases of control shall be conducted by the CQC System Manager for each definable feature of work as follows:

3.6.1 Preparatory Phase

This phase shall be performed prior to beginning work on each definable feature of work, after all required plans/documents/materials are approved/accepted, and after copies are at the work site. This phase shall include:

a. A review of each paragraph of applicable specifications.

b. A review of the contract drawings.

c. A check to assure that all materials and/or equipment have been tested, submitted, and approved.

d. Review of provisions that have been made to provide required control inspection and testing.

e. Examination of the work area to assure that all required preliminary work has been completed and is in compliance with the contract.

f. A physical examination of required materials, equipment, and sample work to assure that they are on hand, conform to approved shop drawings or submitted data, and are properly stored.

g. A review of the appropriate activity hazard analysis to assure safety requirements are met.

h. Discussion of procedures for controlling quality of the work including repetitive deficiencies. Document construction tolerances and workmanship standards for that feature of work.

i. A check to ensure that the portion of the plan for the work to be performed has been accepted by the Architect of Record.

j. Discussion of the initial control phase.

k. The Architect of Record shall be notified at least 48 hours in advance of beginning the preparatory control phase. This phase shall include a meeting conducted by the CQC System Manager and attended by the superintendent, other CQC personnel (as applicable), and the foreman responsible for the definable feature. The results of the preparatory phase actions shall be documented by separate minutes prepared by the CQC System Manager and attached to the daily CQC report. The Contractor shall instruct applicable workers as to the acceptable level of workmanship required in order to meet contract specifications.

3.6.2 Initial Phase

This phase shall be accomplished at the beginning of a definable feature of work. The following shall be accomplished:

a. A check of work to ensure that it is in full compliance with contract requirements. Review minutes of the preparatory meeting.

b. Verify adequacy of controls to ensure full contract compliance. Verify required control inspection and testing.

c. Establish level of workmanship and verify that it meets minimum acceptable workmanship standards. Compare with required sample panels as appropriate.

d. Resolve all differences.

e. Check safety to include compliance with and upgrading of the safety plan and activity hazard analysis. Review the activity analysis with each worker.

f. The Architect of Record shall be notified at least 24 hours in advance of beginning the initial phase. Separate minutes of this phase shall be prepared by the CQC System Manager and attached to the daily CQC report. Exact location of initial phase shall be indicated for future reference and comparison with follow-up phases.

g. The initial phase should be repeated for each new crew to work onsite, or any time acceptable specified quality standards are not being met.

3.6.3 Follow-up Phase

Daily checks shall be performed to assure control activities, including control testing, are providing continued compliance with contract requirements, until completion of the particular feature of work. The checks shall be made a matter of record in the CQC documentation. Final follow-up checks shall be conducted and all deficiencies corrected prior to the start of additional features of work which may be affected by the deficient work. The Contractor shall not build upon nor conceal non-conforming work.

3.6.4 Additional Preparatory and Initial Phases

Additional preparatory and initial phases shall be conducted on the same definable features of work if the quality of on-going work is unacceptable, if there are changes in the applicable CQC staff, onsite production supervision or work crew, if work on a definable feature is resumed after a substantial period of inactivity, or if other problems develop.

3.7 TESTS

3.7.1 Testing Procedure

The Contractor shall perform specified or required tests to verify that control measures are adequate to provide a product which conforms to contract requirements, see Table 1 – Minimum Testing, attached at the end of this specification section. Upon request, the

Contractor shall furnish to the Government duplicate samples of test specimens for possible testing by the Government. Testing includes operation and/or acceptance tests when specified. The Contractor shall procure the services of a Corps of Engineers approved testing laboratory or establish an approved testing laboratory at the project site. A list of tests to be performed shall be furnished as part of the CQC Plan. The list shall give the test name, frequency, specification paragraph containing the test requirements, the personnel and laboratory responsible for each type of test, and an estimate of number of tests required. The Contractor shall perform the following activities and record and provide the following data:

a. Verify that testing procedures comply with contract requirements.

b. Verify that facilities and testing equipment are available and comply with testing standards.

c. Check test instrument calibration data against certified standards.

d. Verify that recording forms and test identification control number system, including all of the test documentation requirements, have been prepared.

e. Results of all tests taken, both passing and failing tests, shall be recorded on the CQC report for the date taken. Specification paragraph reference, location where tests were taken, and the sequential control number identifying the test shall be given. If approved by the Contracting Officer, actual test reports may be submitted later with a reference to the test number and date taken. An information copy of tests performed by an offsite or commercial test facility shall be provided directly to the Contracting Officer. Failure to submit timely test reports as stated may result in nonpayment for related work performed and disapproval of the test facility for this contract. Test results shall be signed by an Engineer Registered in the state where the tests are performed.

3.7.2 Testing Laboratories

3.7.2.1 Capability Check

The Government reserves the right to check laboratory equipment in the proposed laboratory for compliance with the standards set forth in the contract specifications and to check the laboratory technician's testing procedures and techniques. Costs of testing the Contractor Laboratory facilities for Government acceptance shall be borne by the Contractor. Laboratory facilities, including personnel and equipment, utilized for testing soils, concrete, asphalt and steel shall meet criteria detailed in ASTM D 3740 and ASTM E 329, and be accredited by the American Association of Laboratory Accreditation (AALA), National Institute of Standards and Technology (NIST), National Voluntary Laboratory Accreditation Program (NVLAP), the American Association of State Highway and Transportation Officials (AASHTO), or other approved national accreditation authority. All personnel performing concrete testing shall be certified by the American Concrete Institute (ACI). The contractor shall submit documentation showing the AALA, or other approved testing facility, certification, personnel ACI certifications, and the name and work experience of the Registered Professional Engineer on the staff.

3.7.3 Onsite Laboratory

The Government reserves the right to utilize the Contractor's control testing laboratory and equipment to make assurance tests and to check the Contractor's testing procedures, techniques, and test results at no additional cost to the Government.

3.7.4 Furnishing or Transportation of Samples for Testing

Costs incidental to the transportation of samples or materials will be borne by the Contractor. Samples of materials for test verification and acceptance testing by the Government shall be delivered to the Corps of Engineers Division Laboratory, f.o.b., at the following address:

U.S. Army Corps of Engineers
Materials Testing Center
Waterways Experiment Station
3909 Hall Ferry Road
Vicksburg, MS 39180-6199
Phone: (610) 634-3974

ATTN: Project _____, Contract Number _____

Coordination for each specific test, exact delivery location and dates will be made through the Area Office.

If samples are scheduled to arrive at the laboratory on a weekend (after 1700 Friday through Sunday) notify the laboratory at least 24 hours in advance at (601) 634-3974 to arrange for delivery.

3.8 COMPLETION INSPECTION

3.8.1 Punch-Out Inspection

At the 60% (prior to “close-in”) and 95% completion of all work or any increment thereof established by a completion time stated in the Special Clause entitled "Commencement, Prosecution, and Completion of Work," or stated elsewhere in the specifications, the CQC System Manager together with the design team professional architects and civil, structural, electrical and mechanical engineers shall conduct an inspection of the work and develop a punch list of items which do not conform to the approved drawings and specifications. Such a list of deficiencies shall be included in the CQC documentation, as required by paragraph DOCUMENTATION below, and shall include the estimated date by which the deficiencies will be corrected. The CQC System Manager or staff shall make a second inspection to ascertain that all deficiencies have been corrected. Once this is accomplished, the Contractor shall notify the Government that the facility is ready for the Government Pre-Final inspection.

3.8.2 Pre-Final Inspection

The Government will perform this inspection to verify that the facility is complete and ready to be occupied. A Government Pre-Final Punch List may be developed as a result of this inspection. The Contractor's CQC System Manager shall ensure that all items on this list have been corrected before notifying the Government so that a Final inspection with the customer can be scheduled. Any items noted on the Pre-Final inspection shall be corrected in a timely manner. These inspections and any deficiency corrections required by this paragraph shall be accomplished within the time slated for completion of the entire work or any particular increment thereof if the project is divided into increments by separate completion dates.

3.8.3 Final Acceptance Inspection

The Contractor's Quality Control Inspection personnel, plus the superintendent or other primary management person, the Architect of Record, and the Contracting Officer's Representative shall be in attendance at this inspection. Additional Government personnel including, but not limited to, those from Base/Post Civil Facility Engineer user groups, and major commands may also be in attendance. The final acceptance inspection will be formally scheduled by the Contracting Officer based upon results of the Pre-Final inspection. Notice shall be given to the Contracting Officer at least 14 days prior to the final acceptance inspection and shall include the Contractor's assurance that all specific items previously identified to the Contractor as being unacceptable, along with all remaining work performed under the contract, will be complete and acceptable by

the date scheduled for the final acceptance inspection. Failure of the Contractor to have all contract work acceptably complete for this inspection will be cause for the Contracting Officer to bill the Contractor for the Government's additional inspection cost in accordance with the contract clause titled "Inspection of Construction".

3.9 DOCUMENTATION

The Contractor shall maintain current records providing factual evidence that required quality control activities and/or tests have been performed. These records shall include the work of subcontractors and suppliers and shall be on an acceptable form that includes, as a minimum, the following information:

a. Contractor/subcontractor and their area of responsibility.

b. Operating plant/equipment with hours worked, idle, or down for repair.

c. Work performed each day, giving location, description, and by whom. When Network Analysis (NAS) is used, identify each phase of work performed each day by NAS activity number.

d. Test and/or control activities performed with results and references to specifications/drawings requirements. The control phase should be identified (Preparatory, Initial, Follow-up). List deficiencies noted along with corrective action.

e. Quantity of materials received at the site with statement as to acceptability, storage, and reference to specifications/drawings requirements.

f. Submittals reviewed, with contract reference, by whom, and action taken.

g. Off-site surveillance activities, including actions taken.

h. Job safety evaluations stating what was checked, results, and instructions or corrective actions.

i. Instructions given/received and conflicts in plans and/or specifications.

j. Contractor's verification statement.

These records shall indicate a description of trades working on the project; the number of personnel working; weather conditions encountered; and any delays encountered. These records shall cover both conforming and deficient features and shall include a statement that equipment and materials incorporated in the work and workmanship comply with the contract. The original and one copy of these records in report form shall be furnished to the Government daily within 24 hours after the date covered by the report,

except that reports need not be submitted for days on which no work is performed. As a minimum, one report shall be prepared and submitted for every 7 days of no work and on the last day of a no work period. All calendar days shall be accounted for throughout the life of the contract. The first report following a day of no work shall be for that day only. Reports shall be signed and dated by the CQC System Manager. The report from the CQC System Manager shall include copies of test reports and copies of reports prepared by all subordinate quality control personnel.

3.10 SAMPLE FORMS

Sample forms are attached at the end of this specification section.

3.11 NOTIFICATION OF NONCOMPLIANCE

The Contracting Officer will notify the Contractor of any detected noncompliance with the foregoing requirements. The Contractor shall take immediate corrective action after receipt of such notice. Such notice, when delivered to the Contractor at the work site, shall be deemed sufficient for the purpose of notification. If the Contractor fails or refuses to comply promptly, the Contracting Officer may issue an order stopping all or part of the work until satisfactory corrective action has been taken. No part of the time lost due to such stop orders shall be made the subject of claim for extension of time or for excess costs or damages by the Contractor.

TABLE 1

MINIMUM SAMPLING AND TESTING FREQUENCY

Materials	Test	Minimum Sampling and Testing Frequency
Fills, Embankments, Backfills, Subgrade, Subbase, and Base Course Material		
Fill and Embankment	Field Density 2/12/	Two tests per lift for each increment or fraction of 2000 square meters and any time material type changes.
	Lab Density 3/	One test initially per each type of materials or blended material and any time material type changes
	Gradation 1/	One test every 150 cubic meters of fill for each type of materials or blended material and any time material type changes.
Subgrade	Field Density 2/12/	One test per each increment or fraction of 2000 square meters
	Lab Density 3/	One test initially per each type of materials or blended material and any time material type changes
Backfill for Culverts, Trenches, Buildings and Walls, Pavements, and Other Structures	Field Density 2/12/	Culverts: One test per each lift.
		Trenches: One test per lift for each increment or fraction of 150 linear meters for backfill. Under pavements, one test every lift and at every crossing.

TABLE 1 (con.)

Materials	Test	Minimum Sampling and Testing Frequency
		Walls and Buildings Perimeters, Including Footings: One test per lift for each increment or fraction of 60 lineal meters of backfill.
		Buildings Slabs on Grade: One test per lift for each increment or faction of 100 square meters
		Areas enclosed by grade beams, compacted with power driven hand operated compactors: One test per lift for each increment or fraction of 50 square meters
		Pavements: Two tests per lift for each increment or fraction of 2000 square meters
		Other Structures: One test per lift for each increment or fraction of 60 linear meters of backfill.
	Lab Density3/	One test initially per each type of material or blended material.
	Gradation1/	One test per each type of material or blended material.
Subbase and Base	Gradation1/(including .02 mm particles size limits.	1 sample initially, and for every 200 m^2
	In-Place Density2/ 12/	1 sample every 40 m^2
	Moisture-Density Relationship3/	1 initially and every 3 density tests.

TABLE 1 (con.)

Materials	Test	Minimum Sampling and Testing Frequency
	Asphaltic Concrete and Pavements	
Asphaltic concrete	Marshall method Test	1 test initially with mix design, and 1 test per day minimum and 1 per 1,000 metric tons thereafter.
	Specific Gravity	per each Marshall Test.
	Extraction	1 test for each Marshall Method.
	Gradation[5/]	1 per each extraction test.
	Fracture faces[5/]	1 per each extraction test.
Cored or sawed specimens	Perform complete test (thickness, in-place density and bulk specific gravity) on each cored or sawed sample.[12/]	Take 1 set of 3 cored sawed specimens for each 100 square meters or fraction thereof. One specimen shall be taken from longitudinal joint or from transverse joint.
	Portland Cement Concrete	
Coarse and Fine Aggregate[7/]	Moisture, specific gravity and absorption[8/]	1 initially.
	Gradation and fineness modules	1 every 20 m^3 of concrete.
	Moisture, specific gravity and absorption[8/]	(same as coarse aggregate).
Concrete	Slump	Conduct test every day of placement and for every 20 m^3 and more frequently if batching appears inconsistent. Conduct with strength tests.
	Entrained Air	Conduct with slump test.
	Ambient and concrete temperatures	Conduct with slump tests.

TABLE 1 (Cont.)

Materials	Test	Minimum Sampling and Testing Frequency
	Unit weight, yield, and water cement ratio	Conduct with strength tests. Check unit weight and adjust aggregate weights to insure proper yield.
	Flexural strength and evaluation	When specified for slabs on grade or for concrete pavements, take one set of 6 beams every 40 m^3 of concrete with a minimum of 1 set per day. Two beams shall be tested at 7 days, two at 28 days, and two at 90 days.
	Compressive strength	One set of 3 cylinders per day and every 40 m^3 for each class of structural concrete. Test one cylinder at 7 days and two at 28 days. Additional field cure cylinders shall be made when insitu strengths are required to be known.
Vibrators	Frequency and amplitude	Check frequency and amplitude initially and any time vibration is questionable.
	Masonry	
Concrete Masonry Units9/	Dry shrinkage10/	1 set of 3 initially, and every 2,000 units and manufacturers certification and test report.
	Airdry condition11/	Same as dry shrinkage.
	Absorption	" " " "
	Compressive strength	" " " "
	Unit Weight	" " " "
Mortar and grout	Compressive Strength	1 set of 3 initially, and every 2,000 units (1 test at 7 days and 2 tests at 28 days).

NOTES:

1/All acceptance tests shall be conducted from in-place samples.
2/Additional tests shall be conducted when variations occur due to the contractors operations, weather conditions, site conditions, etc.
3/Classification (ASTM D-2487), moisture contents, Atterberg limits and specific gravity tests shall be conducted for each compaction test if applicable.
4/Materials to be submitted only upon request by the Contracting Officer.
5/Tests can substitute for same tests required under "Aggregates" (from bins or source), although gradations will be required when blending aggregates.
6/Increase quantities by 50 percent for Paving mixes and by 100 percent for Government testing of admixtures. Include standard deviation for similar mixes from the intended batch plant and data from a minimum of 30 tests, if available. Refer to ACI 214.
7/A petrographic report for aggregate is required with the sample for source approval. If the total amount of all types of concrete is less than 153 cubic meters, service records from three separate structures in similar environments which used the aggregates may substitute for the petrographic report.
8/Aggregate moisture tests are to be conducted in conjunction with concrete strength tests for w/c calculations.
9/For less than 1,000 units, the above test may be waived at the discretion of the Contracting Officer and acceptance based on manufacturers certification and test report.
10/Additional tests shall be performed when changes are made either in the manufacturing processes or in materials used in the production of the masonry units.
11/If adequate storage protection is not provided at the jobsite, additional tests shall be made to determine that the allowable moisture condition has not been exceeded before the blocks can be placed in the structure.
12/The nuclear densometer, if properly calibrated, may be used but only in addition to the required testing frequency and procedures using sandcones. The densometer shall be calibrated and is recommended for use when the time for complete results becomes critical.

(sample of typical Contractor's Daily Report)
DAILY CONSTRUCTION QUALITY CONTROL REPORT

Contract Number: _____ Date: _____ Rpt No._____

Contract Title: _____ Location: _____

Weather: Clear __ P.Cloudy __ Cloudy __ Rainfall __ (__% of workday)

Temperature during workday: High ____ degrees F. Low ___ degrees F.

1. WORK PERFORMED BY CONTRACTOR/SUBCONTRACTOR(S):

Contractor Name	No. of Workers	Crafts/Hours	Work performed

2. EQUIPMENT DATA:

Type, Size, Etc.	Owned/Rented	Hours Used	Hours Standby

3. QUALITY CONTROL INSPECTIONS AND RESULTS: (Include a description of preparatory, initial, and/or follow up inspections or meetings; check of subcontractors work and materials delivered to the site compared to submittals and/or specifications; comments on the proper storage of materials; include comments on corrective actions to be taken):

_____

_____

_____

_____

4. QUALITY CONTROL TESTING AND RESULTS (comment on tests and attach test reports):

_____

_____

_____

5. DAILY SAFETY INSPECTIONS (Include comments on new hazards to be added to the Hazard Analysis and corrective action of any safety issues):

_____

_____

6. REMARKS (Include conversations with or instructions from the Government representatives; delays of any kind that are impacting the job; conflicts in the contract documents; comments on change orders; environmental considerations; etc.):

_____

_____

_____

_____

_____

CONTRACTOR'S VERIFICATION: The above report is complete and correct. All material, equipment used, and work performed during this reporting period are in compliance with the contract documents except as noted above.

_____
CONTRACTOR QC REPRESENTATIVE

(Sample of Typical Contractor's Test Report)

TEST REPORT

STRUCTURE OR BUILDING _____

CONTRACT NO. _____

DESCRIPTION OF ITEM, SYSTEM, OR PART OF SYSTEM TESTED:
_____

_____

DESCRIPTION OF TEST: _____

_____

_____

NAME AND TITLE OF PERSON IN CHARGE OF PERFORMING TESTS FOR THE CONTRACTOR:

NAME_____

TITLE_____

SIGNATURE_____

I HEREBY CERTIFY THAT THE ABOVE DESCRIBED ITEM, SYSTEM, OR PART OF SYSTEM HAS BEEN TESTED AS INDICATED ABOVE AND FOUND TO BE ENTIRELY SATISFACTORY AS REQUIRED IN THE CONTRACT SPECIFICATIONS.

SIGNATURE OF CONTRACTOR
QUALITY CONTROL INSPECTOR_____

DATE_____

REMARKS
_____

_____

_____

END OF SECTION

****

DEPARTMENT OF THE ARMY **CEGS-01452 (November 1999)**
U.S. ARMY CORPS OF ENGINEERS ----------

GUIDE SPECIFICATION FOR CONSTRUCTION

****

SECTION 01452

SPECIAL INSPECTION FOR SEISMIC-RESISTING SYSTEMS
11/99

****

NOTE: This guide specification covers the requirements for special inspection and testing for seismic-resisting systems when required by paragraph 3.2 of FEMA 302 NEHRP RECOMMENDED PROVISIONS FOR SEISMIC REGULATIONS FOR NEW BUILDINGS AND OTHER STRUCTURES. This specification will apply only to buildings. This guide specification is to be used in the preparation of project specifications in accordance with ER 1110-1-8155.

Comments and suggestions on this guide specification are welcome and should be directed to the proponent of the specification. A listing of proponents, including their organization designation and telephone number, is at URL http://www.hnd.usace.army.mil/techinfo/index.htm, and an electronic feedback page for submission of recommended changes is available at the same address. Use of electronic communication is encouraged.

****

PART 1 GENERAL

****

NOTE: This guide specification will be applicable to both new buildings designed according to TI 809-04 SEISMIC DESIGN FOR BUILDINGS, and existing building seismic rehabilitation designs done according to TI 809-05 SEISMIC EVALUATION AND REHABILITATION FOR BUILDINGS.

In addition to the special inspection and testing specified requirements, the structural designer of the seismic-resisting structural systems must perform "structural observations" during construction when required by paragraph 3.5 of FEMA 302. All observed deficiencies will be immediately reported to the

Contracting Officer. The structural designer performing these observations will be a representative of the Engineer of Record (EOR) for the building being constructed. The EOR will be the Chief of Engineering of the USACE office performing the design for in-house designs and will be the principal of the firm in charge of the design for Architect-Engineer (A-E) designs.

The requirements for special inspection, the special inspector, and related testing will be used only where required by Chapter 3 of FEMA 302. When special inspection is required, FEMA 302 also requires that for certain buildings a quality assurance plan be developed.

The extent of the qualifications of the Contractor and subcontractors can vary considerably, hence the extent of the quality control can vary considerably. The quality assurance plan, therefore, is an opportunity to identify those areas of special concern that must be addressed during the construction process. Those areas include, but are not limited to, types of testing, frequency of testing, types of inspections and frequency of inspections.

****

1.1 REFERENCES

****

NOTE: Issue (date) of references included in project specifications need not be more current than provided by the latest change (Notice) to this guide specification.

****

The publications listed below form a part of this specification to the extent referenced. The publications are referred to in the text by basic designation only.

ACI INTERNATIONAL (ACI)

ACI 318/318R	(1999) Building Code Requirements for Structural Concrete and Commentary
ACI 318M	(1995) Metric Building Code Requirements for Structuiral Concrete and Commentary
ACI 530/530.1	(1995) Building Code Requirements for Masonry Structures

AMERICAN INSTITUTE OF STEEL CONSTRUCTION (AISC)

AISC Pub No. S341	(1997) Seismic Provisions for Structural Steel Buildings
AISC Pub No. S342L	(1993) Load and Resistance Factor Design Specification for Structural Steel Buildings

AMERICAN SOCIETY FOR TESTING AND MATERIALS (ASTM)

ASTM A 435/A 435M	(1990) Straight-Beam Ultrasonic Examination of Steel Plates
ASTM A 615/A 615M	(1996a) Deformed and Plain Billet-Steel Bars for Concrete Reinforcement
ASTM A 898/A 898M	(1991) Straight Beam Ultrasonic Examination of Rolled Steel Structural Shapes

FEDERAL EMERGENCY MANAGEMENT AGENCY (FEMA)

FEMA 302	(Feb 1998) NEHRP Recommended Provisions for Seismic Regulations for New Buildings and Other Structures

1.2 SUBMITTALS

SD-13 Certificates

Special Inspector; GA.

Certification attesting that the Special Inspector is qualified by knowledge and experience to perform the specified Special Inspections. Information, which provides evidence of the knowledge and experience necessary to qualify a person as a Special Inspector for the category of work being certified, will accompany the qualification.

Quality Assurance Plan; GA.

A copy of the Quality Assurance Plan covered by a certificate indicating that the plan meets the content specified in this section.

1.3 SPECIAL INSPECTOR

****

NOTE: The requirements listed in this section have been included in the national model codes for many years, and it is a premise of FEMA 302 that there will be available an adequate supply of knowledge and experienced inspectors to provide the necessary special inspections for the various structural categories of work. Special training may have to be implemented for the nonstructural categories.

****

A Special Inspector shall be used to perform Special Inspections required by this section. The Special Inspector is a person employed by the Contractor and approved by the Government as being qualified by knowledge and experience to perform the Special Inspection for the category of work being constructed. Special Inspectors shall perform their duties independent from the construction quality control staff employed by the Contractor. More than one Special Inspector may be required to provide the varied knowledge and experience necessary to adequately inspect all of the categories of work requiring Special Inspection.

1.4 QUALITY ASSURANCE PLAN

****

NOTE: The designer should retain this paragraph only when paragraph 3.2 of FEMA 302 requires that a Quality Assurance Plan be developed.

****

A quality assurance plan shall be developed containing the following:

a. A list of all iems that require quality assurance Special Inspection and testing, including the type, frequency, extent, and duration of the special inspection for each item on this list.

b. A list of all items that require quality assurance testing, including the type and frequency of testing for each item on this list.

c. The content, distribution, and frequency of special inspection reports.

d. The content, distribution, and frequency of testing reports.

e. The procedures, controls, and people used within the Contractor's organization to develop, sign, and distribute Special Inspection and Testing reports along with the position title and pertinent qualifications of all Contractor personnel involved.

1.5 SPECIAL INSPECTION

The Special Inspection for seismic-resisting system components shall be done as specified. Special Inspector personnel shall be in addition to the quality control inspections and inspectors required elsewhere in this section.

1.5.1 Continuous Special Inspection

Continuous special inspection is the full time observation of the work by the Special Inspector present in the work area whenever work is being performed. Continuous special inspection shall be performed where specified for items as shown on the drawings.

1.5.2 Perodic Special Inspection

Perodic special inspection is the intermittent observation of the work by a Special Inspector present in the work area while work is being performed. The intermittent observation periods shall be at times of significant work, shall be recurrent over the complete work period, and shall total at least 25 percent of the total work time. Perodic special inspection shall be performed where specified for items as shown on the drawings.

PART 2 PRODUCTS

Not Used

PART 3 EXECUTION

3.1 PERFORMANCE OF INSPECTIONS

****

NOTE: Include only those requirements applicable to the project and the applicable Seismic Design Category. Add any additional necessary requirements.

The desinger must indicate on the drawings all locations and all features for which special inspection is required in Chapter 3 of FEMA 302, including the locations of all structural elements requiring inspection, such as intermediate moment frames, special moment frames, shear walls, etc. The designer must also clearly indicate the components of these elements that require special inspection, such as boundary elements of shear walls. The designer shall determine the items to be shown in brackets.

****

Special Inspections shall be performed for the following where designated on the drawings:

3.1.1 [Piers] [Piles] [Caissons]

a. Continuous special inspection during [driving of piles] [and] [placement of concrete in [piers] [piles] [caissons]].

b. Periodic special inspection during construction of [drilled piles] [piers] [caissons] including the placement of reinforcing steel.

3.1.2 Reinforcing Steel

a. Periodic special inspection during and upon completion of the placement of reinforcing steel in [intermediate moment frames] [special moment frames] [shear walls].

b. Continuous special inspection during the welding of reinforcing steel resisting flexural and axial forces [in intermediate moment frames] [in special moment frames] [in boundary members of concrete shear walls] [and during welding of shear reinforcement].

3.1.3 Structural Concrete

Periodic special inspection during and on completion of the placement of concrete in [intermediate moment frames] [special moment frames] [boundary members of shear walls].

3.1.4 Prestressed Concrete

Periodic special inspection during the placement and after completion of placement of prestressing steel. Continuous special inspection during all stressing and grouting operations and during the placement of concrete.

3.1.5 Structural Masonry

a. Periodic special inspection during the preparation of mortar, the laying of masonry units, and placement of reinforcement and prior to placement of grout.

b. Continuous special inspection during the welding of reinforcement, grouting, consolidation and reconsolidation [and] [placement of bent-bar anchors].

3.1.6 Structural Steel

****

NOTE: The designer must indicate on the drawings all locations where welds are loaded to less than 50% of their design strength, thus requiring only periodic special inspection.

****

a. Continuous special inspection for all structural welding, except that periodic special inspection is permitted for single-pass or resistance welds [and] [welds loaded to less than 50 percent of their design strength] provided the qualifications of the welder and the welding electrodes are inspected at the beginning of the work and all welds are inspected for compliance with the approved construction documents at the completion of welding.

b. Periodic special inspection in accordance with AISC Pub No. S342L for the installation of bolts in [intermediate moment frames] [special moment frames] [special truss moment frames] [special concentrically braced frames] [eccentritically braced frames] except that bolts not required to be fully tensioned need not be inspected for bolt tension, other than to ensure that the plies of the connected elements have been brougt into snug contact

3.1.7 Structural Wood

a. Continuous special inspection during all field gluing operations of elements of the seismic-force-resisting system.

b. Periodic special inspections for nailing, bolting, anchoring, and other fastening of components within the seismic-force-resisting system including drag struts braces, and tie-downs.

3.1.8 Cold-Formed Steel Framing

a. Periodic special inspections during all welding operations of elements of the seismic-force-resisting system.

b. Periodic special inspections for screw attachment, bolting, anchoring, and other fastening of components within the seismic-force-resisting system, including struts, braces, and hold-downs.

3.1.9 Architectural Components

****

NOTE: If multiple conditions relative to structure height or cladding or veneer weight exist on a project, the designer should indicate on the drawings where special inspection done according to this specification paragrph is both required and not required, i.e.,

the structure height is 9 m (30 feet) or less or the cladding or veneer weight is 240 kg/m^2 (5 lb/ft^2) or less.
****

Special inspection of the architectural components shall assure that the methods of anchoring and fastening indicated on the drawings are being complied with at the onset of construction of the components, and that the specified or shown number, spacing, and types of fasteners were actually instralled. Special inspection for architectural components shall be as follows:

a. Periodic special inspection during the erection and fastening of [exterior cladding] [interior nonloadbearing partition walls] [exterior nonloadbearing walls] [masonry veneer].

b. Periodic special inspection during the anchorage of [access floors] [suspended ceilings] [storage racks 2.4 m 8 feet or greater in height].

3.1.10 Mechanical and Electrical Components

****
NOTE: The registered design professional should consider requirements to demonstrate the seismic performance of mechanical and electrical components critical to the post-earthquake life safety of the occupants. Any requirements should be clearly indicated on the construction documents. Any currently accepted technology should be acceptable to demonstrate compliance with the requirements.
****

Special inspection of the mechanical and electrical components shall assure that the methods of anchoring and fastening indicated on the drawings are being complied with at the onset of construction of the component, and that the specified or shown number, spacing, and types of fasteners were actually installed. Special inspection for mechanical and electrical components shall be as follows:

a. Periodic special inspection during the anchorage of electrical equipment for emergency or standby power systems.

b. Periodic special inspection during the installation of anchorage of all other electrical equipment.

c. Periodic special inspection during installation for flammable, combustible, or highly toxic piping systems and their associated mechanical units.

d. Periodic special inspection during the installation of HVAC ductwork that will contain hazardous materials.

3.1.11 Seismic Isolation System

Periodic special inspection during the fabrication and installation of isolator units.

3.1.12 Energy Dissipation System

Periodic special inspection during the fabrication and installation of energy dissipation devices.

3.2 TESTING

****

NOTE: The specified testing of the structural materials follows procedures and tests long established by industry standards. The acceptance criteria for each material to be tested should be included in the construction documents prepared for the project.

The designer must indicate on the drawings all locations and all features for which testing, to be reviewed by the special inspector, is required in Chapter 3 of FEMA 302. This includes indicating the locations of all structural elements requiring testing, such as intermediate moment frames, special moment frames, shear walls, etc. The designer must also clearly indicate the material, etc. in these elements that require testing, such as the flexural reinforcement used in the boundary elements of shear walls.

Designers should note that, before ASTM A 615 reinforcing steel is specified as an optional material used to resist earthquake-induced flexural and axial forces in special moment frames or in boundary elements of shear walls of structures in Seismic Design Categories D, E, and F, they must verify that the requirements of Sec. 21.2.5.1 of ACI 318 have been satisfied. Also, before ASTM A 615 reinforcing steel is used where it must be welded, chemical tests must be performed to verify the weldability in accordance with Sec. 3.5.2 of ACI 318.

****

The special inspector shall be responsible for verifying that the testing requirements are performed by an approved testing agency for compliance with the following, where shown on the drawings:

a. Reinforcing and Prestressing Steel: Special testing of reinforcing and prestressing steel shall be as follows:

(1) Examine certified mill test reports for each shipment of reinforcing steel used in reinforced concrete [intermediate frames] [special moment frames] [boundary members of reinforced concrete shear walls] [reinforced masonry shear walls]. The special inspector shall determine conformance with the construction documents.

(2) Examine the reports for chemical tests, done in accordance with Sec. 3.5.2 of ACI 318M ACI 318/318R, which were performed to determine the weldability of ASTM A 615/A 615M reinforcing steel.

b. Structural Concrete: Verify that samples of structural concrete obtained at the project site, along with all material components obtained at the batch plant, have been tested in accordance with the requirements of ACI 318M ACI 318/318R and comply with all acceptance provisions contained therein.

c. Structural Masonry: Verify that all quality assurance testing of structural masonry along with all material components is in accordance with the requirements of ACI 530/530.1 and complies with all acceptance provisions contained therein.

d. Structural Steel:

(1) Verify that all quality assurance testing needed to confirm required material properties [contained in Section 05120 STRUCTURAL STEEL] [and] [given in the quality assurance plan] has been done in accordance with applicable provisions in AISC Pub No. S341 and AISC Pub No. S342L and that the test results comply with all acceptance provisions contained therein.

(2) When a flange or a plate of steel member with a base metal thickness greater than 38 mm 1.5 inches, is joined by welding so that the flange or plate is subjected to through-thickness weld shrinkage strains, verify that the required ultrasonic testing for discontinuities behind and adjacent to such welds has been done after joint completion. Further verify that any material discontinuities rejected on the basis of the requirements contained in [Section 05120 STRUCTURAL STEEL] [and] [ASTM A 435/A 435M or ASTM A 898/A 898M, (Level 1 Criteria)] were repaired and were retested after the repairs and found acceptable.

e. Seismically Isolated Structures: Verify that the required system and component tests for seismically isolated structures have been done in accordance with FEMA 302 and comply with all acceptance provisions contained therin.

f. Energy Dissipation Systems: Verify that the required system and component tests for seismic energy dissipation systems have been done in accordance with FEMA 302 and comply with all acceptance provisions contained therein.

3.3 REPORTING AND COMPLIANCE PROCEDURES

****

NOTE: The success of a quality assurance plan depends upon the experience, training, and knowledge of the special inspector and the accuracy and thoroughness of the reports prepared by the special inspector. It should be emphasized that both the special inspector and the Contractor are required to submit to the Government a final certification attesting that the completed work is in conformance with the approved construction documents.

The Contractor, having day-to-day knowledge of the construction of the project, is in the best position to state whether or not all the construction has been completed in accordance with the approved construction documents. To be fully aware however, the Contractor must institute a system of reporting within its organization that enables the Contractor to effectively practice quality control. The special inspector can only attest to the work personally inspected and, therefore, the special inspector acts more as an auditor or monitor of the quality control program exercised by the Contractor and the testing conducted by the testing agency.

Continuous inspection does not imply that the special inspector has observed all of the work as it is being installed, rather it implies that the special inspector has observed all of the critical conditions of the work to be sufficiently confident that the work was completed in conformance with the construction documents.

****

a. On the first day of each month, the Contractor shall furnish to the Government five copies of the combined progress reports of the special inspector's observations. These progress reports shall list all special inspections of construction or reviews of testing performed during that month, note all uncorrected deficiencies, and describe the corrections made both to these deficiencies and to previously reported deficiencies. Each monthly report shall be signed by all special inspectors who performed special inspections of construction or reviewed testing during that month, regardless of whether they reported any deficiencies . Each monthly report shall be signed by the Contractor.

b. At completion of construction, each special inspector shall prepare and sign a final report attesting that all work they inspected and all testing and test reports they reviewed were completed in accordance with the approved construction documents and that deficiencies identified were satisfactorily corrected. The Contractor shall submit a combined final report containing the signed final reports of all the special inspectors. The Contractor shall sign the combined final report attesting that all final reports of special inspectors that performed work to comply with these construction documents are contained therein, and that the Contractor has reviewed and approved all of the individual inspector's final reports.

SECTION 01501

CONSTRUCTION FACILITIES AND TEMPORARY CONTROLS

PART 1 GENERAL

1.1 AVAILABILITY OF UTILITY SERVICES

1.1.1 The Government will make electricity, high temperature hot water, natural gas, sewer, and potable water available to the Contractor from existing sources.

1.1.2 The Contractor, at its expense and in a workmanlike manner satisfactory to the Contracting Officer, shall install and maintain all necessary temporary connections at and from approved locations, and shall install and maintain all meters required to measure the amount of electricity, water, natural gas, and high temperature hot water (HTHW) heating, used for the purpose of determining charges. The Contractor shall read these meters and shall provide meter readings to the Contracting Officer on a monthly basis. The Contracting Officer may verify these readings. Before final acceptance of the work by the Government, the Contractor shall remove all the temporary connections, meters, and associated paraphernalia in a manner satisfactory to the Contracting Officer.

1.1.3 Electricity will be billed at the following rate which is the prevailing non-Government rate being charged by the Government to its on-base tenants: $0.06488 ~~$0.06601~~ per kWH.

1.1.4 Water will be billed at the following rate which is the prevailing non-Government rate being charged by the Government to its on-base tenants: $4.26213 ~~$3.14364~~ per thousand gallons.

1.1.5 HTHW heat will be billed at the following rate which is the prevailing non-Government rate being charged by the Government to its on-base tenants $12.65179 ~~$13.71301~~ per million BTU.

1.1.6 Natural gas will be billed at the following rate which is the prevailing non-Government rate being charged by the Government to its on-base tenants $5.52036 ~~$6.10825~~ per MCF.

1.1.7 The Contractor will be required to sign a resale agreement for electricity, water, HTHW heating, and natural gas used with the Base Civil Engineer. The Contractor shall coordinate through the Contracting Officer to obtain permits from Base Civil Engineer for connection to utilities. Connection locations and details shall be as approved by Base Civil Engineer. Point of contact at the Base Civil Engineer is Mr. Mike Murray, ~~Mark Tenney,~~ telephone (406) 731- 6142 ~~6212~~.

1.2 SANITARY PROVISIONS

Contractor shall provide sanitary accommodations for the use of employees as may be necessary, shall maintain accommodations approved by the Contracting Officer, and shall comply with the requirements and regulations of the State Health Department, County Sanitarian, or other authorities having jurisdiction.

1.3 TEMPORARY ELECTRIC WIRING

1.3.1 Temporary Power and Lighting

The Contractor shall provide construction power facilities in accordance with the safety requirements of the National Electric Code NFPA No. 70 and the SAFETY AND HEALTH REQUIREMENTS MANUAL EM 385-1-1. The Contractor, or its delegated subcontractor, shall enforce the safety requirements of electrical extensions for the work of subcontractors. Work shall be accomplished by journeyman electricians.

1.3.2 Construction Equipment

In addition to the requirements of SAFETY AND HEALTH REQUIREMENTS MANUAL, EM 385-1-1, temporary wiring conductors installed for operation of construction tools and equipment shall be either Type TW or THW contained in metal raceways, or shall be hard usage or extra hard usage multiconductor cord. Temporary wiring shall be secured above the ground or floor in a workmanlike manner and shall not present an obstacle to persons or equipment. Open wiring may only be used outside of buildings, and then only in accordance with the provisions of the National Electric Code.

1.3.3 Submittals

Submit detailed drawings of temporary power connections. Drawings shall include, but not be limited to, main disconnect, grounding, service drops, service entrance conductors, feeders, GFCI'S, and all site trailer connections.

1.4 FIRE PROTECTION

During the construction period, the Contractor shall provide fire extinguishers in accordance with the safety requirements of the SAFETY AND HEALTH REQUIREMENTS MANUAL, EM 385-1-1. The Contractor shall remove the fire extinguishers at the completion of construction.

1.5 STAGING AREA

Contractor will be provided adequate open staging area adjacent to the site, as directed by the Contracting Officer. Area is unsecured, and Contractor shall make provisions for its own security.

Contractor shall be responsible for keeping staging area, and office area clean and free of weeds and uncontrolled vegetation growth. Weeds shall be removed by pulling or cutting to within 1-inch of ground level. Lawn areas shall be mown to keep growth to less than 2-inches. All loose debris and material subject to being moved by prevailing winds in the area shall be picked up or secured at all times.

Temporary storage buildings (excluding tractor trailers) sited in the area shall conform to the base color scheme (Antique Linen, Fed. No. 23578). Architectural and structural features of all temporary facilities, including tractor trailers, shall be maintained in good repair as required by the Contracting Officer. Staging area shall be enclosed by chain link fence 1.8 m high, with access gates. Spare keys to any locked gates shall be provided to the base Fire Department dispatch office. Area shall be kept clean, orderly and free of debris , demolished materials, etc. at all times. If the area is not maintained in a safe and clean condition as defined above, the Contracting Officer may direct the Contractor to perform such actions as necessary to bring the area and facilities up to base standards at no additional cost to the Government, or have the area cleaned by others with the costs being deducted from the Contractor's payment.

1.6 HOUSEKEEPING AND CLEANUP

Pursuant to the requirements of Clause CLEANING UP and Clause ACCIDENT PREVENTION, of the CONTRACT CLAUSES, the Contractor shall assign sufficient personnel to insure compliance. The Contractor shall submit a detailed written plan for implementation of this requirement. The plan will be presented as part of the preconstruction safety plan and will provide for keeping the total construction site, structures, and accessways free of debris and obstructions at all times. Work will not be allowed in those areas that, in the opinion of the Contracting Officer, have unsatisfactory cleanup and housekeeping at the end of the preceding day's normal work shift. At least once each day all areas shall be checked by the Quality Control person of the Contractor and the findings recorded on the Quality Control Daily Report. In addition, the Quality Control person shall take immediate action to insure compliance with this requirement. Housekeeping and cleanup shall be assigned by the Contractor to specific personnel. The name(s) of the personnel shall be available at the project site.

1.7 CONSTRUCTION NEAR COMMUNICATIONS CABLES

1.7.1 Excavation Near Communication Cables

Digging within 3 feet of buried communication cables (including fiber optic cables), electrical cables, and natural gas lines shall be performed by hand digging until the utility

is exposed. The Project Inspector shall be notified 3 days prior to digging within a 3-foot area near this utility. A representative from Communications (Telco) must be present during excavation of Communications Cables. The cable piping routes must be marked prior to excavation in the area. A work clearance permit (AF Form 103) must be obtained from Base Civil Engineer Construction Management prior to any excavation work. Information on location of existing utilities will be available with the permit. Air Force personnel will locate the utilities only one time for digging permit purposes. It is the Contractor's responsibility from then on, through acceptance of the project. The Contractor shall be held responsible for any damage to the utility by excavation procedures. Once the utility is exposed, mechanical excavation may be used if there is no chance of damage occurring to the cable or piping systems.

1.7.2 Reburial of Exposed Utilities

When existing utility lines are reburied, a tape, detectable by pipe detector systems, shall be installed above the uncovered length of the utility at a depth of 12 inches below grade. Tape shall be a minimum 5 mil plastic tape with metallic tracer, minimum 3 inches wide, lettering on tape to show buried utility, and brightly colored. Any damaged tracer wires shall be repaired to original condition or better.

1.7.3 Access to Communications Manhole or Handhole

No communications manhole or handhole shall be entered without first obtaining a fiber optic cable briefing. Coordinate through the Contracting Officer with the Base Communications Officer.

1.7.4 Cable Cuts or Damage

If a communications cable is cut or damaged the Contractor shall immediately notify the Contracting Officer (CO) and begin gathering personnel and equipment necessary to repair the cut, or damage. Contractor shall begin repairs within one hour of the cut or damage, unless notified otherwise, and continue repairs without interruption until full service is restored.

1.8 PROJECT SIGN

Contractor shall furnish and install 1 project sign in accordance with conditions hereinafter specified and layout shown on drawing No. 49s-40-05-15, Sheets 1 and 2, except Corps of Engineers' castle and Department of Air Force seal will be Government furnished. All letters shall be block type, upper case. Letters shall be painted as indicated using exterior-type paint. Sign shall be maintained in excellent condition throughout the life of job. Project sign shall be located as directed. Upon completion of project, sign shall be removed and shall remain the property of Contractor.

1.9 ELEVATED WORK AREAS

Workers in elevated work areas in excess of 6 feet above an adjoining surface require special safety attention. In addition to the provisions of SAFETY AND HEALTH REQUIREMENTS MANUAL, EM 385-1-1, the following safety measures are required to be submitted to the Contracting Officer's Representative. Prior to commencement of work in elevated work areas, the Contractor shall submit drawings depicting all provisions of his positive fall protection system including, but not limited to, all details of guardrails. Positive protection for workmen engaged in the installation of structural steel and steel joist shall be provided by safety nets, tie-offs, hydraulic man lifts, scaffolds, or other required means. Decking crews must be tied-off or work over nets or platforms not over 6 feet below the work area. Walking on beams and/or girders and the climbing of columns is prohibited without positive protection. Perimeter guardrails shall be installed at floor, roof, or wall openings more than 6 feet above an adjoining surface and on roof perimeters. Rails shall be designed to protect all phases of elevated work including, but not limited to, roofing operations and installation of gutters and flashing. Rails around roofs may not be removed until all work on the roof is complete and all traffic on or across the roof ceases. Rails shall be designed by a licensed engineer to provide adequate stability under any anticipated impact loading. As a minimum, the rails shall consist of a top rail at a height of 1 meter, a mid-rail, and a toe board. Use of tie-offs, hydraulic man lifts, scaffolds, or other means of roof edge protection methods may be utilized on small structures such as family housing, prefabricated metal buildings, etc. If safety belts and harnesses are used, the positive fall protection plan will address fall restraint versus fall arrest. Body belts will ONLY be used for fall restraint, they will not be used for fall arrest.

1.10 CONCEALED WORK

All items of work to be concealed shall be Government inspected prior to concealment.

1.11 REPAIR OF ROAD CUTS

Asphaltic surface shall be completely in place within 48 hours after placement of base gravel. Between placement of base gravel and pavement, road shall be kept in driveable and passable condition.

1.12 CONSTRUCTION PLANNING MEETINGS

Contractor shall attend a weekly scheduling meeting with the Contracting Officer's Representative and a representative of the using service. During the meeting, the Contractor shall be required to present in writing, and discuss his specific construction plans for, the following 2-week period. The first week's schedule shall be firm and the second weeks' schedule may be tentative and subject to change as conditions warrant. The schedule shall be detailed describing planned work activities, crew sizes and

locations, and any utility and access restrictions to base activity which may be caused by planned construction. Any scheduling of outages will be performed at this meeting. Any Contractor activity affecting base security needs, such as scattered crews and number of workers per crew, will be detailed in the written schedule and discussed during the meeting. This weekly meeting is in addition to the construction progress charts or network analysis submission requirements.

1.13 TRAFFIC CONTROL

The Contractor shall provide for movement of traffic through and around the construction zone in a manner that is conducive to the safety of motorists, pedestrians, and workers. This shall include placement and maintenance of traffic control devices in accordance with the U.S. Department of Transportation, Federal Highway Administration publication, Manual on Uniform Traffic Control Devices. Streets (except dead end) may be closed to traffic temporarily by approved written request to the Contracting Officer at least 10 working days prior to street closure. Street closures shall at all times allow street access to a building from one direction. Excavations shall not remain open for more than 1 working day without approval.

1.14 UTILITIES NOT SHOWN

The Contractor can expect to encounter, within the construction limits of the entire project, utilities not shown on the drawings and not visible as to the date of this contract. If such utilities will interfere with construction operations, he shall immediately notify the Contracting Officer verbally and then in writing to enable a determination by the Contracting Officer as to the necessity for removal or relocation. If such utilities are removed or relocated as directed, the Contractor shall be entitled to equitable adjustment for any additional work or delay. The types of utilities the Contractor may encounter are waterlines, sewer lines (storm and sanitary), gas lines, fueling lines, steam lines, buried fuel tanks, septic tanks, other buried tanks, communication lines, and power lines. These utilities may be active or abandoned utilities.

1.15 GOVERNMENT WITNESSING AND SCHEDULING OF TESTING

The Contractor shall notify the Contracting Officer, by serial letter, of dates and agenda of all performance testing of the following systems: mechanical (including fire protection and EMCS) and electrical (including fire protection), not later than 10 calendar days prior to start of such testing. In this notification, the Contractor shall certify that all equipment, materials, and personnel necessary to conduct such testing will be available on the scheduled date and that the systems have been prechecked by him and are ready for performance and/or acceptance testing. Contractor shall also confirm that all operations and maintenance manuals have been submitted and approved. NO PERFORMANCE AND/OR ACCEPTANCE TESTING WILL BE PERMITTED UNTIL THE OPERATIONS AND MAINTENANCE MANUALS HAVE BEEN APPROVED.

Government personnel, at the option of the Government, will travel to the site to witness testing. If the testing must be postponed or canceled for whatever reason not the fault of the government, the Contractor shall provide the Government not less than 3 working days advance notice (notice may be faxed) of this postponement or cancellation. Should this 3 working day notice not be given , the Contractor shall reimburse the Government for any and all out of pocket expenses incurred for making arrangements to witness such testing including, but not limited to airline, rental car, meal, and lodging expenses. Should testing be conducted, but fail and have to be rescheduled for any reason not the fault of the Government, the Contractor shall similarly reimburse the Government for all expenses incurred.

1.16 HARD HAT SIGNS

The Contractor shall provide 24 x 24 inch square Hard Hat Area signs at each entry to the project or work area as directed by the Contracting Officer. A minimum of two signs will be required. Signs shall be in accordance with the sketch at the end of this section.

PART 2 PRODUCTS AND PART 3 EXECUTION (NOT APPLICABLE)

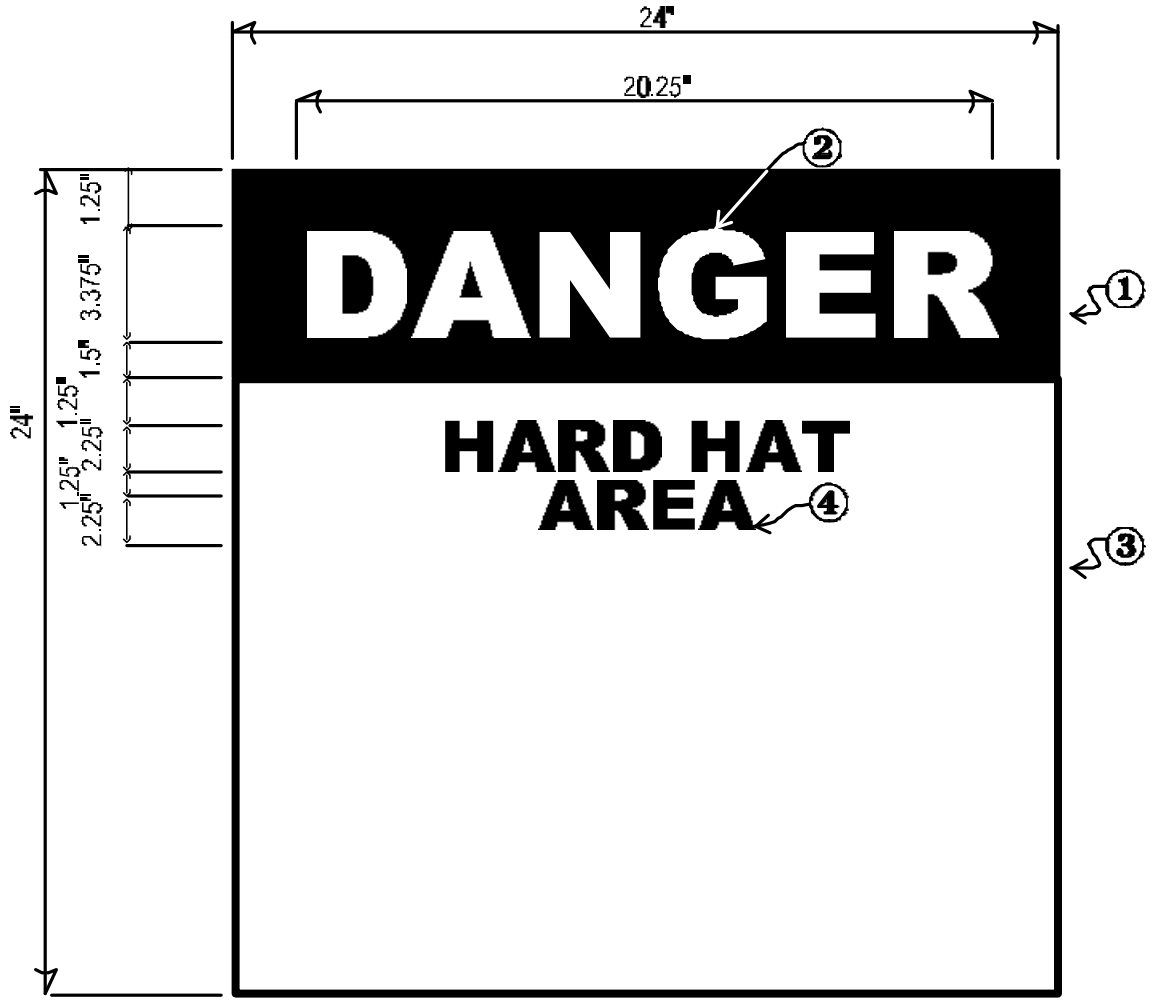

- SIGN SHALL BE FABRICATED FROM .125 THICK 6061-T6 ALUMINUM PANEL
- <u>COLOR</u>
    1. SAFETY RED (SR)
    2. WHITE
    3. WHITE
    4. BLACK
- LETTERING SHALL BE HELVETICA BOLD TYPOGRAPHY.
- LETTERS AND BACKGROUND SHALL BE REFLECTIVE SHEETING MATERIAL.
- SIGNS SHALL BE POSTED AT 6'-6" (BOTTOM SIGN TO GRADE) OR AS DIRECTED BY THE CONTRACTING OFFICER.
- LETTERING TO BE CENTERED ON PANEL.

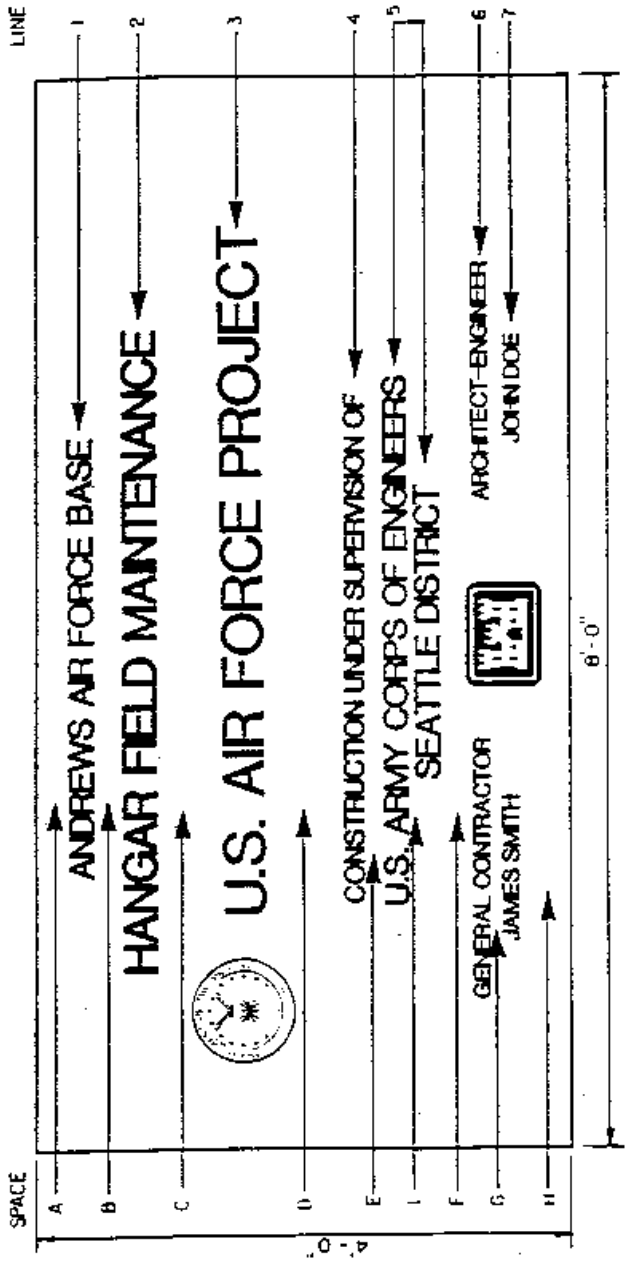

SAMPLE CONSTRUCTION SIGN FOR MCP PROJECTS

SCHEDULE

SPACE	HT.	LINE	DESCRIPTION	LETTER HT.	STROKE
A	2"	1	LOCATION	2 3/8"	1/4"
B	2 5/8	2	PROJECT NOMENCLATURE *	2 3/4"	3/8"
C	5 3/4"	3	U.S. AIR FORCE PROJECT	4"	1/2"
D	8"	4	CONSTRUCTION UNDER SUPERVISION OF	1 1/2"	1/8"
E	4"	5	CONSTRUCTION AGENCY *	2 3/8"	1/4"
F	4"	6	GENERAL CONTRACTOR *	1 3/8"	3/16"
G	1"	7	GENERAL CONTRACTOR *	1 3/8"	3/16"
H	2 7/8"		* WILL VARY TO SUIT PROJECT REQUIREMENTS		
I	2"		SEATTLE DISTRICT		

U.S. AIR FORCE
PROJECT
CONSTRUCTION SIGN

Sheet 1 OF 2 Scale: As shown
U.S. Army Engr. Dist. Seattle, WA.
Dr: R.L.M. Transmitted with report
Tr: R.L.M. DATED: 20 JUNE 84
Ck: R.L.M. File No. 49a/40-05-18

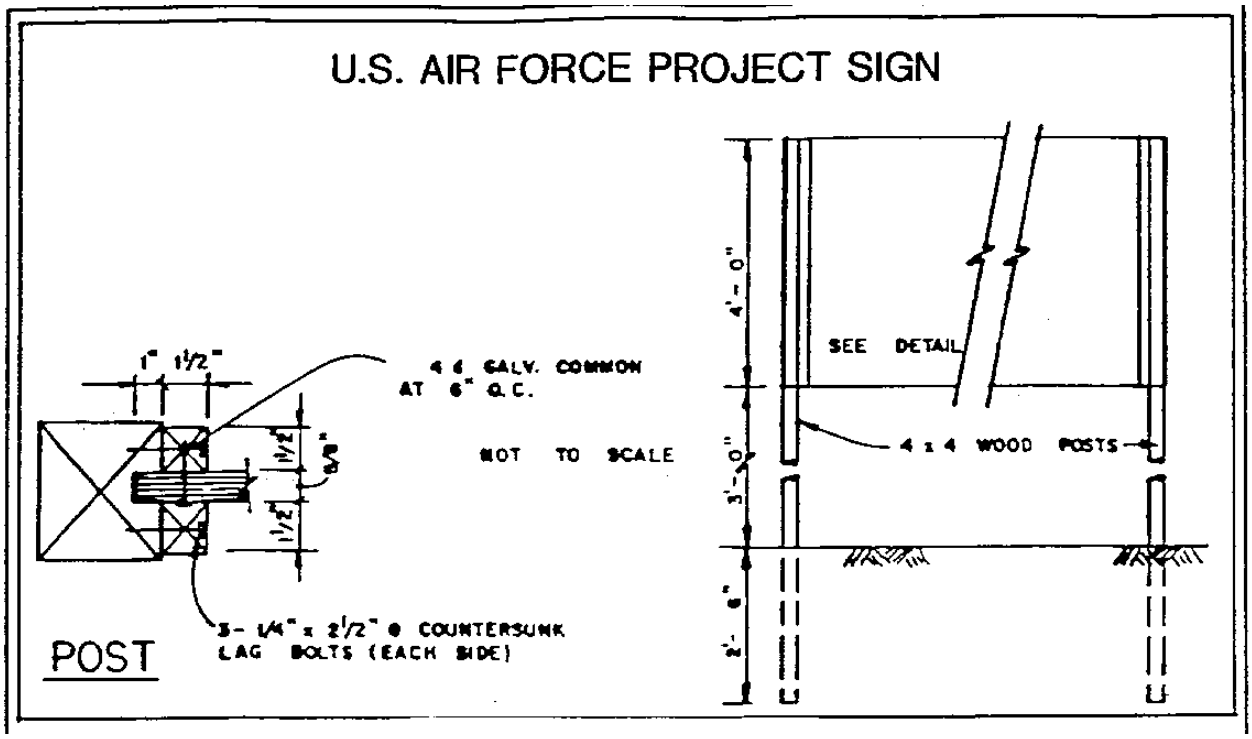

NOTES:

1. Signboard 4' x 8' x 5/8" grade A-C exterior type plywood with medium density overlay on both sides.

2. Paint both sides and edges with one prime coat and two coats of paint, accordance with FED. STD. 595b, color number brown 30118 exterior type enamel. Lettering shall be as shown on drawing and shall be antique linen 33578 gloss exterior type enamel.

3. Lettering shall be Helvetica medium.

4. Acceptable abbreviations may be used for Contractor's name.

5. Department of Air Force Seal and Corps of Engineers' Castle to be Government furnished.

6. No company logo shall be used.

7. Sign posts and 1½" wood trim shall be stained dark brown.

8. Upon completion of work under this contract, the project sign shall be removed from the job site and shall remain the property of the Contractor.

SHEET 2 OF 2

END OF SECTION

SECTION 01701

OPERATIONS AND MAINTENANCE MANUALS

PART 1 GENERAL

1.1 SUBMITTALS

Submittals shall be in accordance with SECTION 01330: SUBMITTALS .

PART 2 PRODUCTS (NOT APPLICABLE)

PART 3 EXECUTION

3.1 GENERAL

The Contractor shall provide Operation and Maintenance (O&M) manuals for the complete project as applicable under this contract, including all Contractor furnished and installed equipment, systems and materials, and all Government furnished-Contractor installed equipment, systems and materials. Included herein are requirements for compiling and submitting the O&M data. Additional O&M data requirements are specified in the individual sections of the technical specifications. O & M Manual requirements shall be coordinated with the requirements as stated in the other technical specification sections and shall include listings for spare parts, framed instructions, etc.

3.1.1 PREPARATION

Manual preparation shall be under the direction of an individual or organization that has demonstrated expertise and a minimum of 3 years experience in the preparation of comprehensive and complete O&M manuals. Qualifications shall be submitted for Contracting Officer approval.

3.1.2 FORMAT

3.1.2 O&M data shall be separated into distinct systems. O&M manuals for any particular system shall include narrative and technical descriptions of the interrelations with other systems. This narrative shall include a description on how the system works with notable features of the system, including normal and abnormal operating conditions. The explanation of the system is to be short and concise with reference to specific manufacturer's equipment manuals for details (see paragraph CONTENT, subparagraph b). If the quantity of material is such that it will not fit within one binder then it shall be divided into volumes, as required (see paragraph Binders).

3.1.3 Six copies of the complete set of manuals shall be provided for each building (as identified by a building number or building description) for multi-building projects. For those multi-building projects where the work is identical in each building, one copy of the manual is required for each building plus six additional copies. For those projects that do not have work in specific buildings, six copies of the manuals are required for the complete project. Any project may have a combination of these requirements to determine the total number of copies required.

3.1.4 The requirement for six copies of the O&M manual shall supersede and replace any requirements for a lesser amount of manuals which may be indicated in some specifications. each set of manuals shall be tailored for its respective building or facility.

3.2 PRELIMINARY O&M MANUAL AND DATA SUBMITTAL

To establish and assure uniform O&M manual format, the Contractor shall submit and receive Contracting Officer approval on one (1) complete set of O&M data without the binders prior to submission of the final bound manuals. Initial O & M Manual data submittal shall be a minimum of 30 days prior to 90 percent project completion.

The Contractor shall also provide two typewritten pages representing the proposed binder marking format as required under Paragraph: Marking and Binding. One page will represent the front cover/spine and the other page will represent the inside of the front cover.

3.2.1 Data submitted for the manual are to be for the specific equipment furnished, and are in addition to that furnished as shop drawings.

3.2.2 The Contracting Officer will require thirty (30) days for review of submitted O&M manual(s) or data. The Contracting Officer will retain one copy of unacceptable O&M manual submittal and return remainder of copies to the Contractor marked "Returned for Correction." If "Returned for Correction." the Contractor shall resubmit the required number of copies of the manual(s) incorporating all comments, prior to substantial completion and/or use and possession. The Contractor may, at his option, update the copy retained by the Government in lieu of providing the added copy.

3.2.3 For equipment or systems requiring personnel training and/or acceptance testing, the final O&M data shall be approved by the Contracting Officer prior to the scheduling of the training and/or testing. O&M data on equipment or systems not requiring training or testing shall be submitted so all data will be approved and bound in the O&M manuals in the required quantity by the time the project reaches 90 percent completion. Failure to furnish approved, bound manuals in the required quantity by the time the project is 90 percent complete, will be cause for the Contracting Officer to hold or adjust the retained percentage in accordance with CONTRACT CLAUSE, PAYMENTS UNDER FIXED PRICE CONSTRUCTION CONTRACTS.

3.2.4 Three of the six completed copies of the final O&M manuals (for each building) shall contain original manufacturer's data. Data in the remaining manuals may be duplicated copies of original data. All data furnished must be of such quality to reproduce clear, legible copies.

3.2.5 The Contractor shall provide lockable metal storage cabinet in the mechanical room to store one set of O&M manuals.

3.3 BINDERS

3.3.1 Construction and Assembly

Manuals shall be sliding posts or screw-type aluminum binding posts (three screws) with spine, but only one type shall be used for all manuals. The manuals shall be hardback plastic-covered, cleanable, not over three (3) inches thick and designed for 8-1/2 x 11 inch paper. The hard cover shall be of minimum stiffness equal to 0.080 inch display board or double weight illustration board.

3.3.2 Marking and Binding

As appropriate, systems shall be grouped into four separate categories and bound into four volumes as follows: Mechanical, Electrical, Fire Protection/Security, and Architectural/General.

Each binder shall have the following information, as a minimum, inscribed on both the spine and cover using an offset or silk screen printing process; "EQUIPMENT OPERATION , MAINTENANCE, AND REPAIR MANUAL;" BUILDING NAME, IDENTIFICATION NUMBER (Building No.), LOCATION, AND DISCIPLINE (MECHANICAL, ELECTRICAL, FIRE PROTECTION/SECURITY, ARCHITECTURAL/GENERAL). Contractor's name and address as well as the contract title and contract number shall be printed on the inside of the front cover.

3.3.3 Color

Color of binder and printing shall be the option of the Contractor except that; (a) printing color shall contrast with binder color, and (b) colors shall be the same for all manuals.

3.3.4 Content

The O&M manuals shall be structured to address each of the following topics in order for each system. When the topic does not apply to a particular system the topic name will be included in the manual with the words "DOES NOT APPLY."

a. Warning Page: A warning page shall be provided to warn of potential dangers (if they exist), such as high voltage, toxic chemicals, flammable liquids, explosive materials,

carcinogens, or high pressures. The warning page shall be placed inside the front cover, in front of the title page.

b. Index: Each manual shall have a master index at the front identifying all manuals and volumes and subject matter by system name for each. Following the master index, each manual shall have an index of its enclosures listing each volume, tab numbers, etc., as necessary to readily refer to a particular operating or maintenance instruction. Rigid tabbed fly leaf sheets shall be provided for each separate product and/or piece of equipment under each system in the manual. For example, if a system includes Air Handling Units 1 through 5, there shall be tab sheets AHU-1, AHU-2, AHU-3, AHU-4 and AHU-5. When a manual is divided into volumes, each volume shall have a master index at its front, followed by an index for the specific volume listing in detail all enclosed instructions for materials, individual pieces of equipment, and systems. All pages shall be numbered with the referenced number included in the index.

c. Description: Narrative and technical descriptions of the system and of the interrelations with other systems.

d. Check List Prior to Start Up: Precautions and prechecks prior to start up of equipment and/or system, including safety devices, monitoring devices and control sequence shall be provided.

e. Start Up and Operation: Step-by-step sequential procedures for start up and normal operation checks for satisfactory operation shall be provided. Safety precautions and instructions that should be followed during these procedures shall be incorporated into the operating instructions and flagged for the attention of the operator. Procedures shall include test, manual or normal, and automatic modes.

f. Shutdown: Procedures for normal and emergency shutdown of equipment and/or systems shall be provided. The instructions shall include any procedures necessary for placing the equipment and/or system on standby or preparing the equipment and/or system for start up at a later time. Procedures shall include test, manual or normal, and automatic modes.

g. Operator Preventive Maintenance, Major Maintenance, and Adjustments: The instructions shall include recommended operator preventive maintenance which would normally be performed by operating personnel and adjustment procedures necessary for normal operation. Schedules shall be provided indicating time frames or operating hours for initiating operator maintenance and adjustments, and including manufacturer's recommended major maintenance requirements. Emergency adjustments shall be included and flagged for operator's attention; the instructions shall also include procedures for emergency repairs that could be performed by operating personnel. These emergency repairs or "trouble-shooting guides" shall be outlined in three columns with the following headings:

Column 1 - Trouble
Column 2 - Probable Cause(s)
Column 3 - Correction

h. Operator Data: The instructions shall include equipment and/or system layouts showing all piping, wiring, breakers, valves, dampers, controls, etc., complete with diagrams, schematics, isometrics, and data to explain the detailed operation and control of each individual piece of equipment and/or system, including system components. Layouts shall show the location within the facility of controls, valves, switches, dampers, etc., by reference to site location, wing designation, floor, room number, or other clear and concise directions for locating the item. Operator data may be identical to posted data and framed instructions but shall be prepared as part of the O&M manuals. All control systems operations data shall include the following:

(1) A fully labeled control schematic which details all set points, throttling ranges, actions, spans, proportional bands, and any other adjustment.

(2) A fully labeled elementary diagram (ladder diagram).

(3) A sequence of control on the diagrams cross-referenced to the control schematic and elementary diagram.

(4) A generic, functional description of each control component shown on the drawings.

(5) Catalog data of every control device.

i. Electrical Layout Drawings: The Electrical O&M's shall include complete layout drawings and one-line diagrams of exterior and interior electrical with reference to the buildings and site layout. Drawings shall include layout of interior lighting, interior power, intrusion detection systems, communication systems and fire protection systems. Exterior layout drawings shall show where fed from, pad-mount transformer, metering, main distribution panel and communication lines. Layout drawings shall show the location within the facility or reference to the building and the site plan. Layout drawings shall be half size contract as-built drawings and shall be inserted into plastic pockets and installed at the back of the O&M's that pertain to that particular drawing.

j. Maintenance Procedures: Recommended procedures shall indicate preventive maintenance, lubrication, and good housekeeping practices which should be performed by operating personnel as well as more complex maintenance procedures which would normally be performed by trained maintenance personnel only. The procedures shall be presented with a schedule indicating time frames or operating hours for specific maintenance to be accomplished. Safety precautions and instructions that should be followed during these procedures shall be incorporated into the maintenance procedures and flagged for the attention of personnel. The procedures shall include necessary

operating instructions for taking equipment off line, putting equipment on line, or putting equipment on standby. The instructions shall include all necessary material, equipment, and system data to perform maintenance work and shall include, but not be limited to, manufacturers/bulletins, catalogs, and descriptive data; certified performance curves, copies of approved test plans, including logs and records of performance acceptance test results, and actual adjustments made during final acceptance and inspection; system layouts, including block diagrams, wiring, control, and isometric diagrams: schematic items within the facility; and interrelationships with other items of system.

k. Repairs: Repair procedures shall be presented with a step-by-step procedure for locating and correcting the trouble. A "shop manual" may be used for this purpose. Repair procedures shall be keyed to a troubleshooting guide outlined in three columns with the following headings:

Column 1 - Trouble
Column 2 - Probable Cause(s)
Column 3 - Correction

The procedures shall clearly indicate a major repair activity which should only be performed in a shop or factory versus normal repair work that may be performed onsite or with equipment online. The procedures shall also clearly indicate the limit of repair work that may be performed by Government personnel during the warranty period without voiding warranty provisions. Safety precautions and instructions that should be followed during these procedures shall be incorporated into the repair procedures and flagged for the attention of personnel.

l. Tools: The Contractor shall provide one of each nonstandard tool, test instrument, and gauge necessary for performing maintenance and repair work. A nonstandard tool, test instrument, or gauge is defined as an item normally supplied by the manufacturer for the equipment operation or maintenance. The Contractor shall prepare a master list of such items for all equipment and systems and shall key maintenance and repair procedures to this list. The above referenced items for performing maintenance and repair work shall be provided for each individual facility of multifacility projects.

m. Parts and Supplies: A complete list of parts and supplies shall be provided with the maintenance instructions. The list shall include all parts and components of individual pieces of equipment, and all parts and components of each system and shall identify such items as description of part, model number, circuit or component identification, etc. Parts and supplies lists shall be included within each volume of maintenance instructions. Further, a master list of spare parts and supplies recommended from each manufacturer for 1 year of operation, including source of supply, shall be sublisted with each instruction.

(1) Availability: The Contractor shall list the sources of supply for all parts and supplies, including name of supplier/manufacturer, address, and telephone number. If the

parts and supplies are not normally stocked locally, (within 6 hours travel time, round trip by surface transportation) necessary procurement time shall also be a part of the listing.

(2) Spare Parts: The Contractor shall provide those spare parts and supplies that are specified in the TECHNICAL SPECIFICATIONS and those which are normally provided with the equipment or material item. A separate master list shall be provided for these items upon turnover to the Government of the parts and supplies.

n. Maintenance Schedule: A separate schedule of all required periodic maintenance shall be included. This schedule shall list by frequency of occurrence all lubricants and special adjustments required. The types and amounts of lubrication must be specified. The Contractor shall verify that the furnished maintenance schedule agrees with the published manufacturer's data.

3.3.4.1 Architectural/General O&M:

(1) Building Products, Applied Materials, and Finishes: Include product data, with catalog number, size, composition, and color and texture designations. Provide information for re-ordering custom manufactured products. Data shall include, but not be limited to, information on carpet, floor tile, vinyl wall finishes, builder's hardware, etc.

(2) Instructions for Care and Maintenance: Include manufacturer's recommendations for cleaning agents and methods, precautions against detrimental agents and methods, and recommended schedule for cleaning and maintenance.

(3) Moisture-protection and Weather-exposed Products: Include product data listing applicable reference standards, chemical composition, and details of installation. Provide recommendations for inspections, maintenance, and repair.

(4) Additional Requirements: As specified in individual specifications sections.

3.3.4.2 Warranties:

In addition to the general warranty required by the contract, the O&M manuals shall include any specific warranties required by other sections of the TECHNICAL SPECIFICATIONS and other warranties normally provided with the particular piece of equipment or system. Extended warranties normally provided by manufacturers that are beyond the warranty of construction shall be specifically noted. The O&M manuals shall also include a specific warranty section itemizing all standard and extended warranty items. The warranty list shall be as indicated below. Warranties will not begin until the facility is accepted by the Contracting Officer. Copy of warranty shall be included in the manual.

WARRANTY INFORMATION

Project Title
Contract Number

General Contractors Name, Phone Number

ITEM DESCRIPTION	START DATE	END DATE	O & M REFERENCE LOCATION
(in alphabetical order)			
Descriptive Name, Manufactures/ Warrantors Name Address & Phone No.			

3.3.4.3 Installed Equipment Lists:

A copy of the completed Equipment in Place forms required in SECTION 01705: EQUIPMENT-IN-PLACE shall be included in the manual. The completed forms shall be located at the front of the catalog and O&M data for the equipment listed on the form.

3.3.4.4 Data Layout:

(1) Data Identification: Catalog data shall be marked to clearly identify pertinent data by highlighting the data with pointers or crossing out all nonpertinent data.

(2) Drawings: All drawings bound in the manuals shall be of such size that will require only one fold made right to left. All larger size drawings shall be inserted into a separate pocket in the required location in the manual. All drawings shall be of microfilm quality.

(3) Posted Data: The Contractor shall provide posted data for equipment or systems, in addition to O&M manuals, and as required by other Technical Specifications sections. The data shall consist of as-built schematics of all wiring, controls, piping, etc., as necessary for the operation of the equipment or system, and a condensed typewritten description of the system. The posted data may include approved shop drawings, layout drawings, riser, and block diagrams and shall indicate all necessary interrelation with other equipment and systems. The data may be presented in one or several frames, under glass or sheet acrylic glazing, for clarity and convenience of location. The framed data presentation and outline shall be acceptable to and posted at locations designated by the Contracting Officer. The data shall be posted before personnel training or performance testing acceptance for the related items of equipment or system.

(4) Framed Instructions: Typewritten instructions, framed under glass or sheet acrylic glazing, explaining equipment or system prestart checkout, startup, operations and shutdown procedures, safety precautions, preventive maintenance procedures, and normal operation checks for satisfactory performance of the equipment of systems shall be posted in conjunction with the posted data. The framed instructions may be presented in one or several frames for clarity and convenience of location. The instruction presentation and outline shall be acceptable to the Contracting Officer prior to posting, and shall be posted at locations designated by the Contracting Officer. All framed instructions shall be posted before personnel training or performance testing acceptance commences for the related item of equipment or system.

3.3.5 Payment

No partial or total payment will be made for the O & M manuals (See the Bid Schedule) until all O&M manuals are fully approved by the Government (A or B action) and all copies of final manuals are received by the Government in their final binders.

3.3.6 Checklist

Contractor shall complete and initial a copy of the O&M Manual Check List which is provided at the end of this section, and forwarded along with ENG form 4025 as part of the O&M Manual submittal to the Contracting Officer for approval.

O&M MANUAL - REVIEW CHECKLIST

__ Does the manual cover all equipment furnished under the contract? (Review against equipment schedules on the drawings and/or equipment submittals.)

__ Does the manual clearly highlight all relevant portions or cross out all irrelevant portions of catalog data?

__ Does the manual contain operations data for the equipment? (Step-by-step operating instructions, start up procedures, sequences of operation, precautions.)

__ Does the manual contain maintenance and repair data for the equipment? (Lubrication, dismantling, assembly, adjustment, troubleshooting.)

__ Does the manual contain a separate maintenance schedule listed by frequency of occurrence?

__ Does the manual contain parts lists or parts catalogs for the equipment? Parts catalog or list shall contain identification, part numbers, recommended parts to be stocked, and local source of parts.

Does the manual contain electrical connection diagrams?

___Does the manual contain control and interlock system diagrams where applicable?

Is every page in the manual numbered and an index provided for ready reference to the data?

Is the cover hard (nonflexible) with the facility name, identification number, location, and system embossed on both the spine and cover? Is the Contractor's name and address, and the contract title and contract number embossed on the inside of the manual cover?

Is the binding screw posts or sliding post?

__ Is any of the data in the manual under the binding where it cannot be seen?

__ Do three sets of manuals contain all original data sheets and are others clearly legible?

Are system layout drawings provided? (Simplified diagrams for the system as installed.)

__ Are all drawings in the manual of such a size that requires one fold right to left, or if a larger size drawing, then inserted into a pocket in the manual?

Note that the above are common requirements to all contracts. Check the specific contract for additional information.

END OF SECTION

This page intentionally blank

SECTION 01702

AS BUILT RECORDS AND DRAWINGS

PART 1 GENERAL

1.1 SUBMITTALS

Data listed in PART 3 of this section shall be submitted in accordance with section 01330 SUBMITTAL PROCEDURES. Due dates shall be as indicated in applicable paragraphs and all submittals shall be completed before final payment will be made.

PART 2 PRODUCTS (NOT APPLICABLE)

PART 3 EXECUTION

3.1 AS-BUILT FIELD DATA

3.1.1 General

The Contractor shall keep at the construction site two complete sets of full size blueline prints of the contract drawings, reproduced at Contractor expense, one for the Contractor's use, one for the Government. During construction, both sets of prints shall be marked to show all deviations in actual construction from the contract drawings. The color red shall be used to indicate all additions and green to indicate all deletions. The drawings shall show the following information but not be limited thereto:

a. The locations and description of any utility lines and other installations of any kind or description known to exist within the construction area. The location includes dimensions and/or survey coordinates to permanent features.

b. The locations and dimension of any changes within the building or structure, and the accurate location and dimension of all underground utilities and facilities.

c. Correct grade or alignment of roads, structures, and utilities if any changes were made from contract plans.

d. Correct elevations if changes were made in site grading from the contract plans.

e. Changes in details of design or additional information obtained from working drawings specified to be prepared and/or furnished by the Contractor including, but not limited to, fabrication erection, installation, and placing details, pipe sizes, insulation material, dimensions of equipment foundations, etc.

f. The topography and grades of all drainage installed or affected as part of the project construction.

g. All changes or modifications from the original design and from the final inspection.

h. Where contract drawings or specifications allow options, only the option actually used in the construction shall be shown on the as-built drawings. The option not used shall be deleted.

These deviations shall be shown in the same general detail utilized in the contract drawings. Marking of the prints shall be pursued continuously during construction to keep them up to date. In addition, the Contractor shall maintain full size marked-up drawings, survey notes, sketches, nameplate data, pricing information, description, and serial numbers of all installed equipment. This information shall be maintained in a current condition at all times until the completion of the work. The resulting field-marked prints and data shall be referred to and marked as “As-Built Field Data,” and shall be used for no other purpose. They shall be made available for inspection by the Contracting Officer’s representative whenever requested during construction and shall be jointly inspected for accuracy and completeness by the Contracting Officer’s representative and a responsible representative of the Contractor prior to submission of each monthly pay estimate. Failure to keep the As-Built Field Data (including Equipment-in-Place lists) current shall be sufficient justification to withhold a retained percentage from the monthly pay estimate.

3.1.2 Submittal of the As-Built Field Data

Two sets of the As-Built Field Data shall be submitted to the Contracting Officer for review and approval a minimum of 20 calendar days prior to the date of final inspection. If review of the preliminary as-built drawings reveals errors and/or omissions, the drawings will be returned to the Contractor for corrections. The Contractor shall make all corrections and return the drawings for backcheck to the Contracting Officer within 10 calendar days of receipt. When submitted drawings are accepted, one set of marked drawings will be returned to the Contractor for the completion of the as-built drawings.

3.2 AS-BUILT ELECTRONIC FILE DRAWINGS

3.2.1 No later than 30 days after final acceptance a complete set of as-built drawings shall be submitted in AutoCAD electronic file format. The electronic file format, layering standards and submittal requirements are specified in paragraphs below. The Contractor shall incorporate all the written modifications to the contract drawings which were issued by amendment or contract modification. All revisions and changes shall be incorporated, i.e. items marked “deleted” shall be deleted, clouds around new items shall be removed, etc. The as-built drawings shall be done in a quality equal to that of the originals. Line work, line weights, lettering, and use of symbols shall be the same as the original line work, line weights, lettering, and symbols. If additional drawings are required they shall be prepared in electronic file format under the same guidance. When final revisions have been completed, each drawings shall be identified with the words “AS-BUILT” in block letters at least 10 mm high placed above the title block if space permits, or if not, below the title block between the border and the trim line. The date of completion and the words

"REVISED AS-BUILT" shall be placed in the revision block above the latest revision notation.

3.2.2 Electronic File Submittal Requirements

3.2.2.1 The AutoCAD electronic file(s) deliverable shall be in AutoCAD release 14 'DWG' binary format. All support files required to display or plot the file(s) in the same manner as they were developed shall be delivered along with the files. These files include but are not limited to Font files, Menu files, Plotter Setup, and Referenced files.

3.2.2.2 Layering shall remain as provided in the electronic files. An explanatory list of which layers are used in each drawing, including any additional layers needed to complete incorporation of the As-Built data, shall be provided with each submittal.

3.2.2.3 Electronic File Deliverable Media: All electronic files shall be submitted in ISO 9660 format CD-ROM (CD). Zip drive disks shall not be provided. Two complete sets of CD(s) shall be submitted along with one complete set of prints and one complete set of full size mylars taken from the CD(s). The mylars are to be submitted only after corrections are made, if any. See paragraph 3.2.3 below. Each CD shall have a clearly marked label stating the Contractor's firm name, project name and location, submittal type (AS-BUILT), and date the CD was made. Each submittal shall be accompanied by a hard copy transmittal sheet that contains the above information along with tabulated information about all files submitted, as shown below:

Electronic File Name	Plate Number	Drawing Title

Electronic version of the table shall be included with each submittal set of disks.

3.2.3 Submittal of the Final As-Built Drawings

The final as-built record drawings shall be completed and returned together with the approved preliminary as-built drawings to the COE, Seattle District Office, Technical Branch, Records and Information Section, within 30 calendar days of final acceptance. All drawings from the original contract drawings set shall be included, including the drawings where no changes were made. The Government will review all final as-built record drawings for accuracy and conformance to the drafting standards and other requirements contained in DIVISION 1 GENERAL REQUIREMENTS. The drawings will be returned to the Contractor if corrections are necessary. The Contractor shall make all corrections and shall return the drawings to the same office within 7 calendar days of receipt.

3.3 No partial or total payment will be made for as-built drawings (See Bid Schedule) until the complete set of as-built drawings, both marked up blue prints and electronic files are

fully approved by the Government (A or B action) and all copies of approved drawings and electronic media received by the Government.

3.4 One set of marked-up as-built blueline prints shall be furnished at the time of system acceptance testing. These as-built blueline prints shall be in addition to the submittals of marked-up as-built blueline prints specified elsewhere in the contract.

END OF SECTION

SECTION 01703

WARRANTY OF CONSTRUCTION

PART 1 GENERAL

1.1 SUBMITTALS

Submittals shall be made in accordance with SECTION 01330: SUBMITTALS. Submittal dates shall be as defined in PART 3 of this section.

PART 2 PRODUCTS (NOT APPLICABLE)

PART 3 EXECUTION

3.1 WARRANTY OF CONSTRUCTION (APR 1984) (FAR52.246-21):

3.1.1 In addition to any other warranties in this contract, the Contractor warrants, except as provided in paragraph 3.1.9 of this Clause, that work performed under this contract conforms to the contract requirements and is free of any defect in equipment, material, or design furnished, or workmanship performed by the Contractor or any subcontractor or supplier at any tier.

3.1.2 This warranty shall continue for a period of 1 year from the date of final acceptance of the work. If the Government takes possession of any part of the work before final acceptance, this warranty shall continue for a period of 1 year from the date the Government takes possession.

3.1.3 The Contractor shall remedy at the Contractor's expense, any failure to conform, or any defect. In addition, the Contractor shall remedy, at the Contractor's expense, any damage to Government-owned or controlled real or personal property, when that damage is the result of:

a. the Contractor's failure to conform to contract requirements or

b. any defect of equipment, material, workmanship, or design furnished.

3.1.4 The Contractor shall restore any work damaged in fulfilling the terms and conditions of this clause. The Contractor's warranty with respect to work repaired or replaced will run for 1 year from the date of repair or replacement.

3.1.5 The Government will notify the Contractor, in writing or by telephone, after the discovery of any failure, defect, or damage and the Contractor shall respond and be on-site to correct the problem within 1 working day after notification. The Contractor shall furnish,

and maintain, a 24 hour emergency telephone number as the point of contact. For failures, defects, or damage causing loss of power or heat, the Contractor shall respond and mitigate the problem within 4 hours.

3.1.6 If the Contractor fails to remedy any failure, defect, or damage within a reasonable time as determined by the Government, after receipt of notice, the Government will have the right to replace, repair, or otherwise remedy the failure, defect, or damage at the Contractor's expense.

3.1.7 With respect to all warranties, express or implied, from subcontractors, manufacturers, or suppliers for work performed and materials furnished under this contract, the Contractor shall:

a. obtain all warranties that would be given in normal commercial practice;

b. require all warranties to be executed, in writing, for the benefit of the Government, if directed by the Contracting Officer; and

c. enforce all warranties for the benefit of the Government, if directed by the Contracting Officer.

3.1.8 In the event the Contractor's warranty under paragraph 3.1.2 of this clause has expired, the Government may bring suit at its expense to enforce a subcontractor's, manufacturer's, or supplier's warranty.

3.1.9 Unless a defect is caused by the negligence of the Contractor or subcontractor or supplier at any tier, the Contractor shall not be liable for the repair of any defects of material or design furnished by the Government nor for the repair of any damage that results from any defect in Government-furnished material or design.

3.1.10 This warranty shall not limit the Government's rights under the Inspection and Acceptance clause of this contract with respect to latent defects, gross mistakes, or fraud.

3.1.11 After final acceptance of the work, the Contractor shall furnish and install an Equipment Warranty Sticker on Contractor-installed equipment. Lettering shall be block-type upper case and easily readable. Sticker shall be of a durable type material and of a type that can be written on. Sticker shall state the following:

a. The title "Equipment Warranty."

b. Contractor's name and Contract Number.

c. Date warranty expires.

d. Point of contact, including name and telephone number.

e. Manufacturer.

END OF SECTION

This page intentionally blank

SECTION 01704

FORM 1354 CHECKLIST

PART 1 GENERAL

1.1 Procedures

The form which is a part of this specification section shall be completed for any project having revisions to real property. The following page contains the basic instructions applicable to the form.

1.2 Submittal

This form shall be submitted for approval, and be approved a minimum of 30 days before final inspection of the project. Failure to have this form completed and approved in time for the final inspection will result in delay of the inspection until the checklist is completed.

PARTS 2 AND 3 NOT USED

INSTRUCTIONS FOR DD FORM 1354 CHECKLIST

The following checklist is only a guide to describe various parts of new and modified construction. Alter this form as necessary or create your own document to give complete accounting of the real property added or deleted for this contract. All items added, deleted, replaced, or relocated within the building 5 foot line, or on site 5 feet beyond the building perimeter must be accounted for completely. Only a few of the most common items beyond the 5 foot line are included on the checklist under UTILITIES/SURFACE CONSTRUCTION, add additional items as required by the construction accomplished.. Attach a continuation sheet and use the checklist format to describe other work related to this particular project. Listed on the last page are additional items with units of measure and descriptive terms.

Costs for each item must include material, tax, installation, overhead and profit, bond and insurance costs. This form should be filled out as each item is installed or each phase of work is completed.

TOTAL FOR ALL ITEMS INCLUDING CONTRACT MODIFICATION COSTS ADDED TOGETHER SHOULD EQUAL THE TOTAL CONTRACT PRICE.

KEY TO ABBREVIATIONS

AC - Acres
BL - Barrels, Capacity
BTU - British Thermal Unit
CY - Cubic Yards
EA - Each
GA - Gallons, Capacity
HD - Head
KV - Kilovolt-Amperes, Capacity (KVA)
KW - Kilowatts, Capacity
SE - Seats
SF - Square Feet
SY - Square Yard
MB - Million British Thermal Units
MI - Miles
LF - Linear Feet
KG - Thousand Gallons Per Day, Capacity
TN - Ton
- Number; How Many

DD FORM 1354 CHECKLIST
Transfer of Real Property

CONTRACT NUMBER:_____

CONTRACT TITLE:_____

LOCATION:_____

1. **DEMOLITION** (Describe each item removed and the cost of removal.)*

2. **RELOCATION** (Describe each item relocated and the cost of relocation.)*

3. **REPLACEMENTS** (Describe each item replaced and replacement cost.)*

*Use a continuation sheet if more space is required. Items should be described by quantity and the correct unit of measure.

4. **NEW CONSTRUCTION OVERVIEW: BUILDING(S)/ADDITION(S) TO A BUILDING** - Use a separate checklist for each building and/or addition.

(1) **Outside Dimensions: Length x Width**

(a) Main Building_____
(b) Offsets_____
(c) Wings_____
(d) Basement_____
(e) Attic_____

(2) **Number of Usable Floors**: _____

(3) **Construction: Exterior Materials Used**

(a) Foundation (such as concrete)_____
(b) Floors (such as wood, concrete)_____
(c) Walls (such as wood siding, metal, CMU)_____
(d) Roof (such as metal, comp., built-up)_____

(4) **Utilities ENTERING Building**: Measure LF from Bldg entry to next larger size of pipe

(a) Water (size & type of pipe; number of LF)_____
(b) Gas (size & type of pipe; number of LF)_____
(c) Sewer (size & type of pipe; number of LF)_____
(d) Electric (phase, voltage, size & type of wire, connected load in amps_____

(5) **Air Conditioning**:

(a) Type_____
(b) Capacity (TONS)_____
(c) SQ YDS covered by system_____

(6) **Heating**:

(a) Source_____
(b) Fuel_____

(7) **Hot Water Facilities**:

(a) Capacity (GAL)_____
(b) Temperature Rise_____

BUILDING COST:_____

5. **BUILDING SYSTEMS (INTERIOR)**

A. **FIRE PROTECTION**:
Property Code
(1) (880 50/880-211) CLOSED HEAD AUTO SPRINKLERS - SF & HD (wet or dry pipe; # of LF of service pipe; type of pipe & # of heads; # of SF covered by system)
DESCRIPTION:
_____
_____
_____
COST: _____

(2) (880 50/880-212) OPEN HEAD DELUGE SYSTEM - SF & HD (# of LF of service pipe; type of pipe; # of heads; # of SF covered)
DESCRIPTION:
_____
_____
_____
COST: _____

(3) (880 10/880-221) AUTO FIRE DETECTION SYSTEM - SF & EA (# of alarms-horns, bells, etc.; # of smoke detectors; # of heat detectors; # of fire alarm panels; # of radio transmitters/antennae)
DESCRIPTION:
_____
_____
_____
COST: _____

(4) (880 20/880-222) MANUAL FIRE ALARM SYSTEM - EA (# of pull stations; # of alarm horns; # of fire extinguisher cabinets)
DESCRIPTION:
_____
_____
_____
COST: _____

(5) (880 60/880-231) CO2 FIRE SYSTEM (# of bottles & size of bottles in lbs)
DESCRIPTION:
_____
_____
_____
COST: _____

(6) (880 60/880-232) FOAM FIRE SYSTEM - EA (# of tanks - capacity in lbs)
DESCRIPTION:
_____
_____
_____
COST: _____

(7) (880 60/880-233) OTHER FIRE SYSTEM - EA
DESCRIPTION:
_____
_____
_____
COST: _____

(8) (880 60/880-234) HALON 1301 FIRE SYSTEM - EA (# of bottles & size of bottles in lbs)
DESCRIPTION:
_____
_____
_____
COST: _____

B. **SECURITY**:

(1) (880 40/872-841) SECURITY ALARM SYSTEM - EA (name of system installed)
DESCRIPTION:
_____
_____
_____
COST: _____

C. **HEATING/COOLING SYSTEMS**

(1) (826 10/890-126) A/C WINDOW UNITS - TN & SF-(# of units installed; amount of SF covered per unit; size & capacity of each unit)
DESCRIPTION:
_____
_____
_____
COST: _____

(2) (826 14/890-125) A/C PLT LESS THAN 5 TN - TN & SF-(# of TN; # of SF covered)
DESCRIPTION:
_____
_____
COST: _____

(3) (826 13/890-121) A/C PLT 5 TO 25 TN - TN-(# of TN; # of SF covered)
DESCRIPTION:
_____
_____
_____
COST: _____

(4) (826 12/826-122) A/C PLT 25 TO 100 TN - TN-(# of TN; # of SF covered)
DESCRIPTION:
_____
_____
_____
COST: _____

(5) (826 11/826-123) A/C PLT OVER 100 TN - TN-(# of TN; # of SF covered)
DESCRIPTION:
_____
_____
_____
COST: _____

(6) (821 33/821-115) HEATING PLT 750/3500 MB - MB-(# of MBH; type of heating system - Ex: Warm air furnace, central)
DESCRIPTION:
_____
_____
_____
COST: _____

(7) (821 32/821-116) HEATING PLT OVER 3500 MB - MB-(# of MBH; type of heating system)
DESCRIPTION:
_____
_____
COST: _____

(8) (811 60/811-147) ELEC EMERGENCY POWER GENERATOR-KW-(size of engine; rating of generator in kilowatts & voltage)
DESCRIPTION:
_____
_____
_____

COST: _____

(9) (81190 or 82320-gas) STORAGE TANK FOR HEATING or GENERATOR FUEL-GA; TYPE; FUEL-(Size, type of tank, kind of fuel & # of gallons)
DESCRIPTION:
_____
_____
_____
COST: _____

SITE WORK

6. **UTILITIES/SURFACE CONSTRUCTION**:

(1) (812 41/812-223) PRIM DISTR LINE OH-LF-(# LF of wire; size & type of wire; # of poles; voltage)
DESCRIPTION:
_____
_____
_____
COST: _____

(2) (812/81360) TRANSFORMERS-KVA
POWER POLES-LF
(# poles; # transformers - pad or pole mounted; KVA of wire; # LF of wire)
DESCRIPTION:
_____
_____
_____
COST: _____

(3) (812 40/812-224) SEC DISTR LINE OH-LF-(voltage; size & type of wire; # transformers; KVA; # LF of wire; # of service drops; # poles)
DESCRIPTION:
_____
_____
_____
COST: _____

(4) (812 42/812-225) PRIM DISTR LINE UG-LF-(KVA; voltage; type of conduit & size(encased or direct burial); size & kind of wire inside conduit; LF of wire & conduit)
DESCRIPTION:
_____
_____
_____
COST: _____

(5) (812 42/812-226) SEC DISTR LINE UG-LF-(type of conduit & size; type & size of wires in conduit; LF of conduit & wire inside conduit; voltage)
DESCRIPTION:
_____
_____
_____
COST: _____

(6) (812 30/812-926) EXTERIOR LIGHTING-EA-(streets or parking area lights) (# & type of lights; whether pole mounted or not; # LF of connecting wire if pole mounted)
DESCRIPTION:
_____
_____
_____
COST: _____

(7) (824 10/824-464) GAS MAINS-LF(size, type, & # of LF of pipe)
DESCRIPTION:
_____
_____
_____
COST: _____

(8) (831 90/831-169) SEWAGE SEPTIC TANK-KG-(size, kind of material, & capacity)
DESCRIPTION:
_____
_____
_____
COST: _____

(9) (832 10/832-266) SANITARY SEWER-LF-(sizes & types of pipes - # of LF of each; # of cleanouts; # & size of manholes)
DESCRIPTION:
_____
_____
_____
COST: _____

(10) (842 10/842-245) WATER DISTR MAINS (POTABLE)-LF-(# LF & size, type of pipe)
DESCRIPTION:
_____
_____
_____
COST: _____

(11) (843 11/843-315) FIRE HYDRANTS-EA-(#; size & type)
DESCRIPTION:
_____
_____
_____
COST: _____

(12) (851 90/851-143) CURBS & GUTTERS-LF-(# LF; material; width & height)
DESCRIPTION: (Is curb extruded or standard?)_
_____
_____
_____
COST: _____

(13) (851 90/851-145) DRIVEWAY-SY-(SY; material used; thickness)
DESCRIPTION:
_____
_____
_____
COST: _____

(14) (851 10/12/851-147) ROAD-SY & LF-(SY; material used; thickness; LF)
DESCRIPTION:
_____
_____
_____
COST: _____

(14) (85210/11 /852-262) VEHICLE PARKING-SY-(SY; material used; thickness; # of bollards; # of wheel stops; # of regular parking spaces; # of handicap spaces)
DESCRIPTION:
_____
_____
_____
COST: _____

(15) (852 20/852-289) SIDEWALKS-SY & LF-(# SF & LF; dimensions of each section & location; thickness; material used)
DESCRIPTION:
_____
_____
_____
COST: _____

(16) (871 10/871-183) STORM DRAIN DISPOSAL-LF-(# LF of pipe; sizes & types of pipe; # of catch basins & manholes & sizes of each)
DESCRIPTION:
_____
_____
_____
COST: _____

(17) (872 15/872-247) FENCE, SECURITY (ARMS)-LF-(# of LF; fence material; # & type of gate(s); # strands of barbed wire on top)
DESCRIPTION:
_____
_____
_____
COST: _____

(18) (87210/12/872-248) FENCE, INTERIOR-LF-(# of LF; fence material; # & kind of gate(s)
DESCRIPTION:
_____
_____
_____
COST: _____

(19) (890 70/890-187) UTILITY VAULT(4 or more transformers)- SF(# SF; dimensions of vault; # of xfmers)
DESCRIPTION:
_____
_____
_____
COST: _____

(20) (135 10/135-583) TEL DUCT FACILITY-LF-(# of LF; size & type of conduit; type of wire)
DESCRIPTION:
_____
_____
_____
COST: _____

(21) (135 10/135-586) TEL POLE FACILITY-LF-(# LF & type of wire; # of poles)
DESCRIPTION:
_____
_____
_____
COST: _____

7. **INSTALLED EQUIPMENT**: Furnish an Equipment-In-Place List. Any price related to equipment should already be included in this checklist.

8. **SYSTEMS NOT PREVIOUSLY LISTED**: Attach a separate sheet and use the same format to describe the system(s). Example: CATV system, intercom system, or other utilities and surface construction not described on this checklist.

9. **ASBESTOS REMOVAL**: Furnish a description by building of the number of LF of asbestos removed, number of LF of reinsulation, number of SF of soil encapsulation, and number and size of tanks, etc., where asbestos was removed. Also, identify buildings by their numbers and use.

10. **MAINTENANCE/RENOVATIONS**: List by building number and describe all additions and deletions by quantity and the correct unit of measure. Furnish a cost per building.

UTILITIES/SURFACE CONSTRUCTION - Listed below are some additional items which may or may not apply to your contract. EACH item installed on site should be listed and priced separately even if not included on this checklist.

(1) IRRIGATION SYSTEM-(LF of pipe; size & type of pipe; number and type of heads)
(2) UNDERGROUND/ABOVEGROUND STORAGE TANKS-(GA, type of tank; material stored)
(3) (833-354) DUMPSTER ENCLOSURE-(SF & dimensions)
(4) (890-152) UNLOADING PAD-(SY; material)
(5) SIGNAGE-(Dimensions; material)
(6) (12580) CATHODIC PROTECTION-(MI; LF)
(7) (87270 LIGHTNING PROTECTION-(LF)
(8) (81290) POLE DUCT RISER-(LF, type of material)
(9) RAMPS-(SF, material; CY if concrete-use code for sidewalk if concrete)
(10) (89080/890-158) LOAD AND UNLOAD PLATFORM-(SF)
(11) (83240/832-255) INDUSTRIAL WASTE MAIN-(LF)
(12) WHEEL STOPS-(EA; size & material)
(13) (81350) OUTDOOR INTEGRAL DISTR CTR-(KVA)
(14) (45110) OUTDOOR STORAGE AREA-(SF)
(15) (73055/730-275) BUS/WAIT SHELTER-(SF)
(16) (690-432) FLAGPOLE-(EA; dimensions)
(17) (93210) SITE IMPROVEMENT-(JOB)
(18) (93220) LANDSCAPE PLANTING (Acre; EA; SF)
(19) (93230) LANDSCAPE BERMS/MOUNDS-(SY)
(20) (93410) CUT AND FILL-(CY)
(21) (843-315) FIRE HYDRANTS-(EA; Type)
(22) (14970) LOADING AND UNLOADING DOCKS AND RAMPS (not connected to a Bldg)-(SF)
(23) BICYCLE RACK-(EA)
(24) (85140/812-928) TRAFFIC SIGNALS-(EA)
(25) (87210) FENCING OR WALLS-(LF)
(26) (15432) RIPRAP-(LF & SY)
(27) (75061) GRANDSTAND OR BLEACHERS-(EA; SE)
(28) 87150/871-187) RETAINING WALLS-(LF; SY; material)

NOTE: 5 Digit Codes-Army; 6 Digit Codes-Air Force

END OF SECTION

This page intentionally blank

SECTION 01705

EQUIPMENT-IN-PLACE LIST

PART 1 GENERAL

1.1 SUBMITTALS

Data listed in PART 3 of this section shall be submitted in accordance with section 01330 SUBMITTAL PROCEDURES. Due dates shall be as indicated in applicable paragraphs and all submittals shall be completed before final payment will be made.

PART 2 PRODUCTS (NOT APPLICABLE)

PART 3 EXECUTION

3.1 Submittal:

The final equipment-in-place list shall be completed and returned to the Contracting Officer within 30 calendar days of the final inspection. The Contracting Officer will review all final Equipment-In-Place Lists for accuracy and conformance to the requirements contained in DIVISION 1 - GENERAL REQUIREMENTS. The lists shall be returned to the Contractor if corrections are necessary. The Contractor shall make all corrections and shall return the lists to the Contracting Officer within 7 calendar days of receipt.

3.2 EQUIPMENT-IN-PLACE LIST:

Contractor shall submit for approval, at the completion of construction, a list of equipment-in-place. This list shall be updated and kept current throughout construction, and shall be jointly inspected for accuracy and completeness by the Contracting Officer's representative and a responsible representative of the Contractor prior to submission of each monthly pay estimate. A sample form showing minimum data required is provided at the end of this section. The EQUIPMENT-IN-PLACE LIST shall be comprised of all equipment falling under one or more of the following classifications:

a. Each piece of equipment listed on the mechanical equipment schedules.
b. Each electrical panel, switchboard, and MCC panel.
c. Each transformer.
d. Each piece of equipment or furniture designed to be movable.
e. Each piece of equipment that contains a manufacturer's serial number on the name plate.
f. All Government furnished, Contractor installed equipment per a. through e. (price data excluded)

3.3 PAYMENT:

No partial or total payment will be made for the 1354 Checklist (See the Bid Schedule) until both the 1354 Checklist and Equipment in Place List are fully approved by the Government (A or B action) and all copies of approved lists received by the Government.

EQUIPMENT-IN-PLACE LIST

CONTRACT NO.: _____

Specification Section: _____ Paragraph No. _____

ITEM DESCRIPTION:

_____

Item Name:

_____

Serial Number:

_____

Model Number:

_____

Capacity: _____Replacement Cost _____

ITEM LOCATION:

Building Number: _____ Room Number: _____

or Column Location: _____

MANUFACTURER INFORMATION:

Manufacturer Name:

_____

Trade Name (if different from item name):

_____

Manufacturer's Address:

_____

_____

Telephone Number:
_____

WARRANTY PERIOD: _____

CHECKED BY: _____

END OF SECTION

SECTION 02220

DEMOLITION

PART 1 GENERAL

1.1 REFERENCES

The publications listed below form a part of this specification to the extent referenced. The publications are referred to in the text by basic designation only.

ENGINEERING MANUALS (EM)

EM 385-1-1	(1996) U.S. Army Corps of Engineers Safety and Health Requirements Manual

1.2 GENERAL REQUIREMENTS

The work includes demolition, salvage of identified items and materials, and removal of resulting rubbish and debris. Rubbish and debris shall be removed from Government property daily, unless otherwise directed, to avoid accumulation at the demolition site. Materials that cannot be removed daily shall be stored in areas specified by the Contracting Officer. In the interest of occupational safety and health, the work shall be performed in accordance with EM 385-1-1, Section 23, Demolition, and other applicable Sections. In the interest of conservation, salvage shall be pursued to the maximum extent possible; salvaged items and materials shall be disposed of as specified.

1.3 SUBMITTALS

Government approval is required for submittals with a "GA" designation; submittals having an "FIO" designation are for information only. The following shall be submitted in accordance with Section 01330 SUBMITTAL PROCEDURES:

Statements

Work Plan; GA.

The procedures proposed for the accomplishment of the work. The procedures shall provide for safe conduct of the work, including procedures and methods to provide necessary supports, lateral bracing and shoring when required, careful removal and disposition of materials specified to be salvaged, protection of property which is to remain undisturbed, coordination with other work in progress, and timely disconnection of utility services. The procedures shall include a detailed description of the methods and equipment to be used for each operation, and the sequence of operations in accordance with EM 385-1-1.

1.4 DUST CONTROL

The amount of dust resulting from demolition shall be controlled to prevent the spread of dust to occupied portions of the construction site and to avoid creation of a nuisance in the surrounding area. Use of water will not be permitted when it will result in, or create, hazardous or objectionable conditions such as ice, flooding and pollution.

1.5 PROTECTION

1.5.1 Protection of Personnel

During the demolition work the Contractor shall continuously evaluate the condition of the structure being demolished and take immediate action to protect all personnel working in and around the demolition site. No area, section, or component of floors, roofs, walls, columns, pilasters, or other structural element will be allowed to be left standing without sufficient bracing, shoring, or lateral support to prevent collapse or failure while workmen remove debris or perform other work in the immediate area. Floors, roofs, walls, columns, pilasters, and other structural components that are designed and constructed to stand without lateral support or shoring, and are determined to be in stable condition, may be allowed to remain standing without additional bracing, shoring, of lateral support until demolished. The Contractor shall ensure that no elements determined to be unstable are left unsupported and shall be responsible for placing and securing bracing, shoring, or lateral supports as may be required as a result of any cutting, removal, or demolition work performed under this contract.

1.5.2 Protection of Existing Property

Before beginning any demolition work, the Contractor shall survey the site and examine the drawings and specifications to determine the extent of the work. The Contractor shall take necessary precautions to avoid damage to existing items to remain in place, to be reused, or to remain the property of the Government; any damaged items shall be repaired or replaced as approved by the Contracting Officer. The Contractor shall coordinate the work of this section with all other work and shall construct and maintain shoring, bracing, and supports as required. The Contractor shall ensure that structural elements are not overloaded and shall be responsible for increasing structural supports or adding new supports as may be required as a result of any cutting, removal, or demolition work performed under this contract.

1.5.3 Protection From the Weather

The interior of buildings to remain and salvageable materials and equipment shall be protected from the weather at all times.

1.5.4 Protection of Trees

Trees within the project site which might be damaged during demolition and which are indicated to be left in place shall be protected by a 1.83 m (6 foot) high fence. The fence shall be securely erected a minimum of 1.5 m from the trunk of individual trees or follow the outer perimeter of branches or clumps of trees. Any tree designated to remain that is damaged during the work under this contract shall be replaced in kind or as approved by the Contracting Officer.

1.5.5 Environmental Protection

The work shall comply with the requirements of Section 01061.

1.6 BURNING

The use of burning at the project site for the disposal of refuse and debris will not be permitted.

1.7 USE OF EXPLOSIVES

Use of explosives will not be permitted.

1.8 PERMITS AND NOTIFICATIONS

1.8.1 The Contractor shall notify the Montana Department of Environmental Quality, Permitting and Compliance Division, Air and Waste Management – Asbestos, of the demolition of Building 1060 as per asbestos notification regulatory requirements.

1.8.2 The Contractor shall submit a 10 day notification to the State Department of Environmental Equality for demolition of a load bearing wall and a 10 day notification to EPA, State, or Local Air Authority for asbestos abatement.

PART 2 PRODUCTS (NOT APPLICABLE)

PART 3 EXECUTION

3.1 EXISTING BUILDING NO. 1060

Existing Building No. 1060 indicated shall be removed below grade. Walls and footings shall be totally removed below grade. Sidewalks, curbs, gutters and street light bases shall be removed as indicated. Site shall be backfilled with satisfactory material to match adjacent grade. Finished grade shall include 100 mm depth of topsoil and lawn seeding per specification section 02922 – SODDING.

3.2 DORMITORY SITE

Concrete foundation debris and rubble from previous construction shall be removed from under the building foundation.

3.3 UTILITIES

Disconnection of utility services, with related meters and equipment shall be performed as directed by Contracting Officer. Existing utilities shall be removed as indicated. When utility lines are encountered that are not indicated on the drawings, the Contracting Officer shall be notified prior to further work in that area. High-Temperature Hot Water (HTHW) piping shown on Plate C-5 shall be removed from the point of distribution at Building 1060 to the valve station adjacent to 75th Street North.

3.4 FILLING

Holes, open basements and other hazardous openings shall be filled in accordance with Section 02315, EXCAVATION, FILLING AND BACKFILLING FOR BUILDINGS.

3.5 DISPOSITION OF MATERIAL

Title to material and equipment to be demolished, except Government salvage and historical items, is vested in the Contractor upon removal of such material and equipment from Government property. The Government will not be responsible for the condition, loss or damage to such property after notice to proceed.

3.5.1 Salvageable Items and Material

Contractor shall salvage items and material to the maximum extent possible.

3.5.1.1 Material Salvaged for the Contractor

Material salvaged for the Contractor shall be stored as approved by the Contracting Officer and shall be removed from Government property before completion of the contract. Material salvaged for the Contractor shall not be sold on the site.

~~3.5.1.2 Material Salvaged for the Government~~

~~The Contractor shall salvage the following items for the Government:~~

~~a. two transformers from Building 1060; the Contractor shall deliver them to Building 407.~~

~~b. two steel stair structures located on each end of Building 1060; the Contractor shall remove the stairs as a complete unit and deliver them to a designated storage area located within 2 miles of the construction site as directed by the Contracting Officer.~~

Point of Contact (POC) is Mr. Randy Groce at 406-731-6460.

3.5.1.2 Historical Items

Historical items shall be removed in a manner to prevent damage. The following historical items shall be delivered to the Government for disposition: Corner stones, contents of corner stones, and document boxes wherever located on the site.

3.5.2 Unsalvageable Material

Concrete, masonry, and other noncombustible material, except concrete permitted to remain in place, shall be disposed of off site and of Government contracted property, and shall be the responsibility of the Contractor.

3.6 CLEAN UP

Debris and rubbish shall be removed from basement and similar excavations. Debris shall be removed and transported in a manner that prevents spillage on streets or adjacent areas. Local regulations regarding hauling and disposal shall apply.

END OF SECTION

SECTION 02234

SUBBASE COURSE

PART 1 GENERAL

1.1 REFERENCES

The publications listed below form a part of this specification to the extent referenced. The publications are referred to in the text by basic designation only.

1.1.1 AMERICAN SOCIETY FOR TESTING AND MATERIALS (ASTM)

ASTM C 29	(1991a) Unit Weight and Voids in Aggregate
ASTM C 117	(1995) Materials Finer Than 75 micrometer (No. 200) Sieve in Mineral Aggregates by Washing
ASTM C 131	(1989) Resistance to Degradation of Small-Size Coarse Aggregate by Abrasion and Impact in the Los Angeles Machine
ASTM C 136	(1995a) Sieve Analysis of Fine and Coarse Aggregates
ASTM D 75	(1987; R 1992) Sampling Aggregates
ASTM D 422	(1963; R 1972) Particle Size Analysis of Soils
ASTM D 1556	(1990) Density and Unit Weight of Soil in Place by the Sand-Cone Method
ASTM D 1557	(1991) Laboratory Compaction Characteristics of Soil Using Modified Effort (56,000 ft-lbf/cu. ft. (2,700 kN-m/cu.m.))
ASTM D 2167	(1994) Density and Unit Weight of Soil in Place by the Rubber Balloon Method
ASTM D 2487	(1993) Classification of Soils for Engineering Purposes (Unified Soil Classification System)
ASTM D 4318	(1993) Liquid Limit, Plastic Limit, and Plasticity Index of Soils
ASTM E 11	(1995) Wire-Cloth Sieves for Testing Purposes

1.3 DEGREE OF COMPACTION

Degree of compaction is a percentage of the maximum density obtained by the test procedure presented in ASTM D 1557. This will be abbreviated herein after as percentage of laboratory maximum density.

1.4 SUBMITTALS

Government approval is required for submittals with a "GA" designation; submittals having an "FIO" designation are for information only. The following shall be submitted in accordance with SECTION: SUBMITTALS:

SD-01 Data

Equipment; FIO.

List of proposed equipment to be used in performance of construction work, including descriptive data.

SD-09 Reports

Sampling and Testing; GA.

Copies of field test results shall be furnished to the Contracting Officer within 24 hours after tests are performed. Test results specified under paragraph MATERIALS shall be submitted for approval prior to using the material. Tests shall show liquid limit, plasticity index, wear, and sieve analysis, including percentage of particles having diameters less than .02 mm.

Compaction and Sampling Plan; GA.

A compaction and sampling plan shall be prepared and submitted for approval. All test results shall be keyed to the approved compaction and sampling plan.

~~SD-18 Records~~

1.5 SAMPLING AND TESTING

Sampling and testing shall be the responsibility of the Contractor. Sampling and testing shall be performed by an approved commercial testing laboratory. The materials shall be tested to establish compliance with the specified requirements.

1.5.1 Sampling

Sampling for laboratory testing shall be in conformance with ASTM D 75. When deemed necessary, the sampling will be observed by the Contracting Officer.

1.5.2 Tests

1.5.2.1 Sieve Analysis

Sieve analysis shall be made in conformance with ASTM C 117 and ASTM C 136. Sieves shall conform to ASTM E 11.

1.5.2.2 Liquid Limit and Plasticity Index

Liquid limit and plasticity index shall be determined in accordance with ASTM D 4318.

1.5.2.3 Density Tests

Density shall be measured in the field in accordance with ASTM D 1556 or ASTM D 2167. For the method presented in ASTM D 1556 the base plate as shown in the drawing shall be used.

1.5.2.4 Wear Test

Wear tests shall be made in conformance with ASTM C 131.

1.5.2.5 Weight Per Cubic meter (Foot) of Slag

Weight per cubic meter (foot) of slag shall be determined in accordance with ASTM C 29.

1.5.2.6 Particle Size

Particle size shall be determined in accordance with ASTM D 422.

1.5.3 Approval of Material

The source of the material shall be selected and tested 30 days prior to the time the material will be required in the work. Tentative approval of material will be based on tests of samples for the specific job. Final approval of both the source and the materials will be based on tests for gradation, liquid limit, and plasticity index performed on samples taken from the completed and compacted subbase course.

1.6 WEATHER LIMITATIONS

Subbase courses shall be constructed when the atmospheric temperature is above 2 degrees C. (35 degrees F.) When the temperature falls below 2 degrees C, (35 degrees F,) the Contractor shall protect all areas of completed subbase course by approved methods against detrimental effects of freezing. Areas of completed subbase course damaged by freezing, rainfall, or other weather conditions shall be corrected to meet specified requirements.

1.7 EQUIPMENT

All plant, equipment, and tools used in the performance of the work will be subject to approval before the work is started and shall be maintained in satisfactory working condition at all times. The equipment shall be adequate and shall have the capability of producing the required compaction, meeting grade controls, thickness control, and smoothness requirements as set forth herein.

PART 2 PRODUCTS

2.1 MATERIALS

Aggregates shall consist of crushed stone or slag, gravel, sand, or other sound, durable, approved materials processed and blended or naturally combined. Aggregates shall be durable and sound, free from lumps and balls of clay, organic matter, objectionable coatings, and other foreign material. Material retained on the

4.75 mm (No. 4) sieve shall have a percentage of wear not to exceed 50 percent after 500 revolutions when tested as specified in ASTM C 131. Aggregate shall be reasonably uniform in density and quality. Slag shall be an air-cooled, blast-furnace product having a dry weight of not less than 1050 kg cubic meters. (65 pcf.) Aggregates shall have a maximum size of 62.5 millimeter(s) (inch(s)) and shall be within the limits specified as follows:

Sieve Designation	Maximum Allowable Percentage by Weight Passing Square-Mesh Sieve No. 1
2 mm	50
0.075 mm	5

Sieve Designation	Maximum Allowable Percentage by Weight Passing Square-Mesh Sieve No. 1
No. 10	50
No. 200	5

Particles having a diameter of less than 0.02 mm will not exceed 3 percent by weight of the total aggregate, as determined in accordance with ASTM D 422, tested in the completed layer.

The portion of any blended component and of the completed course passing the 0.425 mm (No. 40 sieve) shall be either nonplastic or shall have a liquid limit not greater than 25 and a plasticity index not greater than 5.

PART 3 EXECUTION

3.1 OPERATION OF AGGREGATE SOURCES

Aggregates shall be obtained from off-site sources.

3.2 STOCKPILING MATERIAL

Prior to stockpiling of material, storage sites shall be cleared and leveled by the Contractor. All materials, including approved material available from excavation and grading, shall be stockpiled in the manner and at the locations designated. Aggregates shall be stockpiled on the cleared and leveled areas designated by the Contracting Officer so as to prevent segregation. Materials obtained from different sources shall be stockpiled separately.

3.3 PREPARATION OF UNDERLYING MATERIAL

Prior to constructing the subbase course, the underlying course shall be cleaned of all foreign substances. Subgrade shall conform to the requirements of SECTION: EARTHWORK. Ruts or soft, yielding spots in the underlying courses, areas having inadequate compaction, and deviations of the surface from requirements set forth herein shall be corrected by loosening and removing soft or unsatisfactory material

and by adding approved material, reshaping to line and grade, and recompacting to specified density requirements.

3.4 GRADE CONTROL

The finished and completed subbase course shall conform to the lines, grades, and cross sections shown. The lines, grades, and cross sections shown shall be maintained by means of line and grade stakes placed by the Contractor at the site of the work.

3.5 MIXING AND PLACING MATERIALS

The materials shall be mixed and placed in such a manner as to obtain uniformity of the subbase material and at the water content specified. The Contractor shall make such adjustments in mixing or placing procedures or in equipment as may be directed to obtain the true grades, to minimize segregation and degradation, to reduce or accelerate loss or increase of water, and to insure a satisfactory subbase course.

3.6 LAYER THICKNESS

The compacted thickness of the subbase course shall be as indicated. When a compacted layer of 150 mm (6 inches) is specified, the material may be placed in a single layer; when a compacted thickness of more than 150 mm (6 inches) is required, no layer shall exceed 150 mm (6 inches) nor be less than 75 mm (3 inches) when compacted.

3.7 COMPACTION

Each layer of the subbase course shall be compacted as specified with approved compaction equipment. Water content shall be maintained during the compaction procedure such that the water content is within plus or minus 2 percent of optimum water content as determined from laboratory tests as specified in paragraph SAMPLING AND TESTING. In all places not accessible to the rollers, the mixture shall be compacted with hand-operated power tampers. Compaction shall continue until each layer is compacted through the full depth to at least 95 percent of laboratory maximum density. The Contractor shall make such adjustments in compacting or finishing procedures as may be directed to obtain true grades, to minimize segregation and degradation, to reduce or increase water content, and to ensure a satisfactory subbase course. Any materials that are found to be unsatisfactory shall be removed and replaced with satisfactory material or reworked, as directed, to meet the requirements of this specification.

3.9 EDGES OF SUBBASE COURSE

Approved material shall be placed along the edges of the subbase course in such quantity as will compact to the thickness of the course being constructed. When the course is being constructed in two or more layers, at least a 300 mm (1 foot) width of the shoulder shall be rolled and compacted simultaneously with the rolling and compacting of each layer of the subbase course, as directed.

3.10 SMOOTHNESS TEST

The surface of each layer shall not show deviations in excess of 9.5 mm (3/8 inch) when tested with a 3.05 mm (10 foot) straightedge applied parallel with and at right angles to the centerline of the area to be paved. Deviations exceeding this amount shall be corrected by removing material, replacing with new material, or reworking existing material and compacting, as directed.

3.11 THICKNESS CONTROL

The completed thickness of the subbase course shall be in accordance with the thickness and grade indicated on the drawings. The thickness measurement shall be made by test holes, at least 75 mm (3 inches) in diameter through the course. The completed subbase course shall not be more than 13 mm (1/2 inch) deficient in thickness nor more than 13 mm (1/2 inch) above or below the established grade. Where any of these tolerances are exceeded, the Contractor shall correct such areas by scarifying, adding new material of proper gradation or removing material, and compacting, as directed. Where the measured thickness of the subbase course is 13 mm (1/2 inch) or more thicker than shown, the course will be considered as conforming with the specified thickness requirements plus 13 mm (1/2 inch). The average job thickness shall be the average of the job measurements as specified above but within 6 mm (1/4 inch) of the thickness shown.

3.12 MAINTENANCE

The subbase course shall be maintained in a satisfactory condition until accepted.

END OF SECTION

SECTION 02300

EARTHWORK

PART 1 GENERAL

1.1 REFERENCES

The publications listed below form a part of this specification to the extent referenced. The publications are referred to in the text by basic designation only.

AMERICAN SOCIETY FOR TESTING AND MATERIALS (ASTM)

ASTM C 117	Test Method for Materials Finer Than 75-µm Sieve in Mineral Aggregates by Washing.
ASTM C 136	Method of Sieve Analysis of Fine and Coarse Aggregates.
ASTM D 422	Test Method for Particle-Size Analysis of Soils.
ASTM D 1556	(1990) Density of Soil In-Place by the Sand-Cone Method.
ASTM D 1557	(1991) Moisture-Density Relations of Soils and Soil-Aggregate Mixtures Using a 4.54-kilogram (kg) Rammer and 457-millimeters (mm) Drop. Laboratory Compaction Characteristics of Soil Using Modified Effort of 2,700 kN-m/cu.m.
ASTM D 2167	(1984, R 1990) Density and Unit Weight of Soil In-Place by the Rubber Balloon Method
ASTM D 2487	(1985, R 1993) Classification of Soils for Engineering Purposes (Unified Soil Classification System).
ASTM D 2922	(1991) Density of Soil and Soil-Aggregate in Place by Nuclear Methods (Shallow Depth).
ASTM D 3017	(1988; R 1993) Water Content of Soil and Rock in Place by Nuclear Methods (Shallow Depth).
ASTM D 3740	Evaluation of Agencies Engaged in the Testing and/or Inspection of Soil and Rock as Used in Engineering Design and Construction.
ASTM D 4318	Liquid Limit, Plastic Limit and Plasticity Index of Soils

1.3 DEFINITIONS

1.3.1 Satisfactory Materials

Materials classified in ASTM D 2487 as GW, GP, SW, and SP, and free from roots and other organic matter, trash, debris, and frozen materials and stones larger than 150 mm in any dimension are satisfactory. Materials classified as CL, SP-SM, SM, GP-GM, GM, or GC are also satisfactory provided that they contain moisture contents suitable for the intended use.

1.3.2 Unsatisfactory Materials

Materials which do not comply with the requirements for satisfactory materials are unsatisfactory. Materials classified in ASTM D 2487 as Pt, OH, and OL are unsatisfactory. Unsatisfactory materials also include man-made fills, refuse, or backfills from previous construction or having moisture contents which are not suitable for the intended use.

1.3.3 Cohesionless and Cohesive Materials

Cohesive materials include materials classified as GC, SC, ML, CL, MH, and CH. Cohesionless materials include materials classified in ASTM D 2487 as GW, GP, SW, and SP. Materials classified as GM and SM will be identified as cohesionless only when the fines have a plasticity index of zero. Determination of grain size for classification will be made in conformance with ASTM C 117, ASTM C 136, or ASTM D 422.

1.3.4 Degree of Compaction

Degree of compaction is a percentage of the maximum density obtained by the test procedure presented in ASTM D 1557 abbreviated below as a percent of laboratory maximum density.

1.3.5 Topsoil

Materials for topsoil shall be defined in SECTION: SODDING.

1.4 SUBMITTALS.

The following shall be submitted in accordance with SECTION: 01330, SUBMITTAL PROCEDURES:

02300/2.2 Borrow Material, GA.

02300/3.14 Field in-place Density Tests, GA.

1.5 SUBSURFACE DATA

Subsurface soil exploration logs are shown on the drawings. These data represent the best subsurface information available; however, variations may exist in the subsurface between boring locations.

PART 2 PRODUCTS

2.1 ROCK FOR SLOPE PROTECTION (Not Applicable)

2.2 BORROW MATERIAL

Borrow material shall be selected to meet requirements and conditions of the particular fill for which it is to be used.

2.2.1 Selection

Borrow materials shall be obtained from sources outside the limits of Government-controlled land. Borrow materials shall be subject to approval. The source of borrow material shall be the Contractor's responsibility. The Contractor shall obtain from the owners the right to procure material, shall pay all royalties and other charges involved, and shall bear all the expense of developing the sources, including rights-of-way for hauling and maintenance of the borrow area.

PART 3 EXECUTION

3.1 GENERAL ~~CONSERVATION OF TOPSOIL~~

The Contractor shall be responsible to determine fill requirements on site for proper drainage, etc. All work shall be in strict compliance with the Geotechnical Report and the specifications. ~~(Not Applicable)~~

3.2 EXCAVATION

After topsoil removal has been completed, excavation of every description, regardless of material encountered, within the grading limits of the project shall be performed to the lines and grades indicated. Foundation materials under buildings and structures shall not be disturbed by heavy construction equipment or other traffic that may cause pumping or rutting of the foundation materials below indicated finish grade. Satisfactory excavated clayey materials stockpiled for later use shall be covered to prevent change in moisture content. The excavation shall be completed as quickly as possible to the design depth to protect the foundation soils from drying or infiltration of addition moisture. If the excavation is to remain open for more than 3 days for foundations or 7 days for paving areas, an impervious moisture barrier shall be applied to or cover the newly exposed surfaces of the excavation to prevent moisture content change of the foundation soils. This may consist of sprayed-on emulsion or cutback asphalt, white pigmented curing compound, or plastic sheeting. Sprayed-on asphalt or curing compound shall be applied at a rate of 0.5 liters per square meter over the entire surface of the subgrade including excavation backslopes, trenches, and foundation of structures. Satisfactory excavation material shall be transported to and placed in fill areas within the limits of the work. All unsatisfactory material including any soil which is disturbed by the Contractor's operations or softened due to exposure to the elements and water and surplus material shall be disposed of outside the limits of Government-controlled land. In the event that it is necessary to remove unsatisfactory material to a depth greater than specified, the Contracting Officer shall be notified and an adjustment in the contract price will be considered in accordance with the contract. Excavations carried below the depths indicated, without specific directions, shall, except as otherwise specified, be refilled to the proper grade with satisfactory material as directed. All additional work of this nature shall be at the Contractor's expense. Excavation and filling shall be performed in a manner and sequence that will provide drainage at all times. Excavations shall be kept free from water while construction therein is in progress. Material required for fills in excess of that produced by excavation within the grading limits shall be obtained from borrow areas.

3.3 DITCHES, GUTTERS, AND CHANNEL CHANGES

Ditches, gutters, and channel changes shall be cut accurately to the cross sections and grades indicated. All roots, stumps, rock, and foreign matter in the sides and bottom of ditches, gutters, and channel changes shall be trimmed and dressed or removed to conform to the slope, grade, and shape of the section indicated. Care shall be taken not to excavate ditches and gutters below the grades indicated. Excessive ditch and gutter excavation shall be backfilled to grade either with satisfactory, thoroughly compacted material or with suitable stone or cobble to form an adequate gutter paving as directed. All ditches and gutters excavated under this section shall be maintained until final acceptance of the work. Satisfactory material excavated from ditches and channel changes shall be placed in fill areas. Unsatisfactory and excess excavated material shall be

disposed of in accordance with directions in paragraph "EXCAVATION." No excavated material shall be deposited closer to the edges of the ditches than indicated and in no case less than 1 meter.

3.4 BACKFILL ADJACENT TO STRUCTURES

Backfill adjacent to structures shall be placed and compacted uniformly in such manner as to prevent wedging action or eccentric loading upon or against the structures. Slopes bounding or within areas to be backfilled shall be stepped or serrated to prevent sliding of the fill. During backfilling operations and in the formation of embankments, equipment that will overload the structure in passing over and compacting these fills shall not be used. Backfill for storm drains and subdrains, including the bedding and backfill for structures other than culverts and drains, shall conform to the additional requirements in other applicable sections.

3.5 PREPARATION OF GROUND SURFACE FOR FILL

All vegetation, such as roots, brush, heavy sods, heavy growth of grass, and all decayed vegetable matter, rubbish, and other unsatisfactory material within the area upon which fill is to be placed, shall be stripped or otherwise removed before the fill is started. In no case will unsatisfactory material remain in or under the fill area. Sloped ground surfaces steeper than one vertical to four horizontal on which fill is to be placed shall be plowed, stepped, or broken up, as directed, in such manner that the fill material will bond with the existing surface. Prepared surfaces on which compacted fill is to be placed shall be wetted or dried as may be required to obtain the specified moisture content and density.

3.6 FILLS AND EMBANKMENTS

Fills and embankments shall be constructed at the locations and to lines and grades indicated. The completed fill shall conform to the shape of the typical sections indicated or shall meet the requirements of the particular case. Satisfactory material obtained during excavation may be used in forming required fill. Fill shall be satisfactory material and shall be reasonably free from roots, other organic material, and trash and from stones having a maximum diameter greater than 150 mm . No frozen material will be permitted in the fill. Stones having a dimension greater than 100 mm shall not be permitted in the upper 150 mm of fill or embankment. The material shall be placed in successive horizontal layers of 200 mm in loose depth for the full width of the cross section and shall be compacted as specified. Each layer shall be compacted before the overlaying lift is placed. Moisture content of the fill or backfill material shall be adjusted by wetting or aerating, as required.

3.7 MOISTURE CONTROL

Moisture content of local clayey fill or backfill materials used under or adjacent to structures and pavements, and where subgrade compaction is required under pavements and structures, moisture content of materials being compacted shall be not less than 1 percent below optimum and not more than 4 percent above optimum moisture content.

3.8 FINISHED EXCAVATION, FILLS, AND EMBANKMENTS

All areas covered by the project, including excavated and filled sections and adjacent transition areas, shall be uniformly smooth-graded. The finished surface shall be reasonably smooth, compacted, and free from irregular surface changes. The degree of finish shall be that ordinarily obtainable from blade-grader operations, except as otherwise specified. Ditches and gutters shall be finished to permit adequate drainage. The surface of areas to be turfed shall be finished to a smoothness suitable for the application of turfing materials. For subgrade areas to be paved, the following shall be accomplished as required: (a) soft or otherwise unsatisfactory material shall be replaced with satisfactory excavated material or other approved materials; (b) low areas resulting from removal of unsatisfactory material shall be brought up to required grade

with satisfactory materials, and the entire subgrade shall be shaped to line, grade, and cross section and shall be compacted as specified.

3.9 PLACING TOPSOIL

On areas to receive topsoil, the compacted subgrade soil shall be scarified to a 50 mm depth for bonding of topsoil with subsoil. Topsoil then shall be spread evenly to a thickness as shown and graded to the elevations and slopes shown. Topsoil shall not be spread when frozen or excessively wet or dry. Material required for topsoil in excess of that produced by excavation within the grading limits shall be obtained from areas outside the limits of Government-controlled land.

3.10 SUBGRADE PREPARATION FOR PAVEMENTS

Subgrade shall be shaped to line, grade, and cross section, and compacted as specified. This operation shall include plowing, disking, and any moistening or aerating required to obtain specified compaction. Soft or otherwise unsatisfactory material shall be removed and replaced with satisfactory excavated material or other approved material as shown on the drawings or as directed by the Contracting Officer. Low areas resulting from removal of unsatisfactory material shall be brought up to required grade with satisfactory materials, and the entire subgrade shall be shaped to line, grade, and cross section and compacted as specified.

3.11 SHOULDER CONSTRUCTION

Shoulders shall be constructed of satisfactory excavated or borrow materials or as otherwise shown or specified herein. Shoulders shall be constructed as soon as possible after adjacent paving is complete, but in the case of rigid pavements, shoulders shall not be constructed until permission of the Contracting Officer has been obtained. Shoulder construction shall be done in proper sequence in such a manner that adjacent ditches will be drained effectively and that no damage of any kind is done to the adjacent completed pavement. The completed shoulders shall be true to alignment and grade and shaped to drain in conformity with the cross section shown.

3.12 PROTECTION

During construction, fills, embankments, and excavations shall be kept shaped and drained. Newly graded areas shall be protected from traffic and erosion, and any settlement or washing away that may occur from any cause, prior to acceptance, shall be repaired and grades reestablished to required elevations and slopes. All work shall be conducted in accordance with environmental protection requirements of the contract. Ditches and drains along subgrade shall be maintained in such a manner as to drain effectively at all times. The finished subgrade shall not be disturbed by traffic or other operation and shall be protected and maintained by the Contractor in a satisfactory condition until subbase course, base course, or pavement is placed. The storage or stockpiling of materials on the finished subgrade will not be permitted. No subbase course, base course, or pavement shall be laid until the subgrade has been checked and approved, and in no case shall subbase course, base course, or pavement be placed on a muddy, spongy, or frozen subgrade.

3.13 COMPACTION

Each layer of the fill or embankment and subgrade shall be compacted to at least the percent of laboratory maximum density specified below:

Percent Laboratory Maximum density	
Cohesive	Cohesionless

	material	material
Fill, embankment, and backfill		
Under pavements and shoulders	90	95
Under non-paved areas	85	90
Subgrade		
Under pavements and shoulders, to a depth of at least 150 mm below the subgrade surface.	90	95
Expansive clayey materials Moisture content shall not be less than 1 percent below optimum and not more than 4 percent above optimum.	90	

Compacted subgrades, fills, embankments, and backfills, that are distributed by the Contractor's operations or by adverse weather before acceptance by the Contracting Officer shall be scarified and compacted at the specified moisture content to the required density before the continuation of construction. Any field density test results indicating the density does not meet specifications shall be followed immediately with a second field density test and a corresponding laboratory quality control test at no additional cost to the Government. The location of the second field density test shall be in the same lift and within 3 meters of the first test and along the direction of travel of the compaction equipment. Should the second field density test also indicate insufficient density, filling or backfilling shall cease in the affected area until all deficiencies have been correction. Inadequate materials shall be removed, reworked, or replaced, compacted and tested at no additional cost to the Government. Recompaction over underground utilities and heating lines shall be by hand tampering. Compaction requirements in trenches shall conform to applicable portions of SECTION: EXCAVATION, TRENCHING, AND BACKFILLING FOR UTILITIES SYSTEMS.

3.14 FIELD TESTING CONTROL

Testing shall be the responsibility of the Contractor and shall be performed by an approved commercial testing laboratory. Testing facilities and personnel shall meet the requirements of ASTM D 3740 and SECTION: CONTRACTOR QUALITY CONTROL. Field in-place density shall be determined in accordance with ASTM D 1556. Moisture-density relations shall be determined in accordance with ASTM D 1557. The minimum number of tests, acceptable for each type of operation shall be in accordance with SECTION: CONTRACTOR QUALITY CONTROL.

3.15 PROTECTION

Newly graded areas shall be protected from traffic and from erosion, and any settlement or washing away that may occur from any cause, prior to acceptance, shall be repaired and grades reestablished to the required elevations and slopes. All work shall be conducted in accordance with the environmental protection requirements of the contract.

END OF SECTION

SECTION 02315

EXCAVATION, FILLING AND BACKFILLING FOR BUILDINGS

PART 1 GENERAL

1.1 SUMMARY (Not Applicable)

1.2 REFERENCES

The publications listed below form a part of this specification to the extent referenced. The publications are referred to in the text by basic designation only.

AMERICAN SOCIETY FOR TESTING AND MATERIALS (ASTM)

ASTM C 117	(1980) Materials Finer than 75- micrometer (µm) Sieve in Mineral Aggregates by Washing
ASTM C 136	(1983) Sieve Analysis of Fine and Coarse Aggregates
ASTM D 422	(1963, R 1972) Particle-Size Analysis of Soils
ASTM D 1556	(1990) Density of Soil in Place by the Sand-Cone Method
ASTM D 1557	(1978; R 1991) Moisture-Density Relations of Soils and Soil-Aggregate Mixtures Using 4.54-kilogram (kg) Rammer and 457-mm Drop
ASTM D 2167	(1984; R 1990) Density and Unit Weight of Soil in Place by the Rubber Balloon Method
ASTM D 2216	(1990) Laboratory Determination of Water (Moisture) Content of Soil, Rock, and Soil-Aggregate Mixtures
ASTM D 2217	Wet Preparation of Soil Samples for Particle-Size Analysis and Determination of Soil Particles
ASTM D 2487	(1990) Classification of Soils for Engineering Purposes
ASTM D 2922	(1981; R 1990) Density of Soil and Soil-Aggregate in Place by Nuclear Methods (Shallow Depth)
ASTM D 2937	(1983; R 1990) Density of Soil in Place by the Drive-Cylinder Method
ASTM D 3017	(1988) Water Content of Soil and Rock in Place by Nuclear Methods (Shallow Depth)

ASTM D 3740	Evaluation of Agencies Engaged in the Testing and/or Inspection of Soil and Rock as Used in Engineering Design and Construction
ASTM D 4318	(1984) Liquid Limit, Plastic Limit, and Plasticity Index of Soils

1.3 DEFINITIONS

1.3.1 Degree of Compaction

Degree of compaction required is expressed as a percentage of the maximum density obtained by the test procedure presented in ASTM D 1557 abbreviated hereinafter as percent laboratory maximum density.

1.4 Submittals

Government Approval is required for submittals with a "GA" designation; submittals having an "FIO" designation are for information only. The following shall be submitted in accordance with SECTION: 01330 - SUBMITTALS:

02315/3.9 Borrow Materials; GA.

02315/2.1.5 Non-frost Susceptible Materials: GA.

02315/2.1.7 Moisture Barrier Liner: GA.

02315/2.1.8 Nonswelling, Low Permeable Material: GA.

02315/2.1.10 Soil Treatment Agent; GA.

Certifications, material safety data sheets and manufacturers instructions, not less than 15 days before application of the soil treatment agent. A copy of the pesticide label, Contractor’s certification, and application plan including rates of application shall be submitted not less than 15 days before application of the soil treatment agent. All soil treatment submittals shall be approved by Malmstrom Air Force Base, Base Civil Engineering/Entomology Section and the Contracting Officer.

PART 2 PRODUCTS

2.1 MATERIALS

2.1.1 Satisfactory Materials

Satisfactory materials include materials classified in ASTM D 2487 as CL, SP-SM, SP-SC, SM, GP, GW, SW, SP, GP-GM, GM or GC provided that they contain a moisture content suitable for the intended use. Materials shall be free of trash, debris, roots or other organic matter, or stones larger than 75 millimeters (mm) in any dimension.

2.1.2 Unsatisfactory Materials

Unsatisfactory materials include materials classified in ASTM D 2487 as Pt, OH, OL, and any other materials not defined as satisfactory. Unsatisfactory materials include but are not limited to those materials containing roots and other organic matter, trash, debris, frozen materials and stones larger than 75 mm. Foundations and/or foundation debris from previous construction shall be unsatisfactory.

2.1.3 Cohesionless and Cohesive Materials

Cohesionless materials include materials classified in ASTM D 2487 as GW, GP, SW, and SP. Cohesive materials include materials classified as GC, SC, ML, CL, MH, and CH. Materials classified as GM and SM will be identified as cohesionless only when the fines are nonplastic. Liquid limit and plasticity index shall be determined in accordance with ASTM D 4318 using ASTM D 2217, Procedure B. Determination of grain size for classification will be made in conformance with ASTM C 117, C 136, or D 422.

2.1.4 Expansive Soils

Expansive soils are defined as soils that have a plasticity index equal to or greater than 12 when tested in accordance with ASTM D 4318.

2.1.5 Nonfrost Susceptible (NFS) Material

Nonfrost susceptible materials shall consist of materials classified in ASTM D 2487 as GW, GP, SW, and SP with a maximum particle size of 75 mm and less than 5 percent passing the 0.075 mm size sieve, and with not more than 3 percent by weight finer than 0.02 mm grain size.

2.1.6 Capillary Water Barrier (Not Applicable)

2.1.7 Moisture Barrier Liner

The liner shall be 0.508 mm thick and be comprised of high density polyethylene material manufactured of virgin first quality products. The Contractor shall submit a certification from the manufacturer stating that the liner meets all physical property requirements for the intended application. The liner shall be so produced as to be free of holes, blisters, undispersed raw materials, or any sign of contamination by foreign matter. Preparation of surface to be lined, installation of liner, field seaming, and final inspection shall be in accordance with manufacturer's recommendations and specifications. The liner shall be attached to vertical wall surfaces with continuous pressure treated wood nailers secured by expansion anchors into the wall. At pipe penetrations, provide boot or clamp connection set in sealant.

2.1.8 Nonswelling, Low Permeable Material

Nonswelling, low permeable material shall consist of silty sandy gravel soils with the following gradation: 100 percent by weight passing the 75 mm sieve, 20 to 50 percent by weight passing the 4.75 mm sieve, and 8 to 15 percent by weight passing the 0.075 mm sieve.

2.1.9 Moisture Control

Where local clayey materials are used as backfill under or adjacent to structures and pavements, and where subgrade compaction is required under pavements and structures, moisture content of materials

being compacted shall be not less than 1 percent below optimum and not more than 4 percent above optimum water content.

2.1.10 Soil Treatment Agent

Soil treatment agent shall be isofenphos, fenvalerate, cypermethrin, permethrin, or chlorphyrifos. Labels shall bear evidence of registration under the Federal Insecticide, and Rodenticide Act and shall provide the manufacturer's recommended rates of application.

PART 3 EXECUTION

3.1 CLEARING AND GRUBBING

The areas within lines 1.5 meters outside of each building and structure line shall be cleared and grubbed of trees, stumps, roots, brush and other vegetation, debris, existing foundations, pavements, utility lines, structures, fences, and other items that would interfere with construction operations. Stumps, logs, roots, and other organic matter shall be completely removed and the resulting depressions shall be filled with satisfactory material, placed and compacted in accordance with paragraph FILLING AND BACKFILLING. Materials removed shall be disposed of outside the limits of Government-controlled land and shall be the responsibility of the Contractor.

3.2 TOPSOIL (Not Applicable)

3.3 EXCAVATION

Excavation shall conform to the dimensions and elevations indicated for each building, structure, and footing except as specified hereinafter, and shall include trenching for utility and foundation drainage systems to a point 1.5 meters beyond the building line of each building and structure and all work incidental thereto. Excavation shall extend a sufficient distance from walls and footings to allow for placing and removal of forms. All unsatisfactory materials shall be removed from under building footings, and structures with footings and replaced with satisfactory materials. Excavation for foundation drilled caissons shall be in accordance with SECTION: DRILLED FOUNDATION CAISSONS (PIERS).

During excavation and construction operations foundation materials under buildings and structures shall not be disturbed by heavy construction equipment or other traffic that may cause pumping or rutting of the foundation materials below indicated finish grade. All material disturbed or softened by the Contractor's operations shall be removed, disposed, and replaced with satisfactory materials at the Contractor's expense. The excavation shall be completed as quickly as possible to the design depth to protect the foundation soils from drying or infiltration of additional moisture. The Contractor shall be responsible for maintaining the existing soil moisture conditions from the start of excavation to the completion of backfill. If the excavation is to remain open for more than 3 days for foundations or 7 days for paving areas, an impervious moisture barrier shall be applied to the newly exposed surfaces of the excavation to prevent moisture content change of the foundation soils. This may consist of sprayed-on emulsion or cutback asphalt, white pigmented curing compound, or plastic sheeting. Sprayed-on asphalt or curing compound shall be applied at a rate of 0.5 liters per square meter over the entire surface of the subgrade including excavation backslopes, trenches, and foundation of structures. Sides of the excavation shall be constructed on a 1 vertical on 1 horizontal slope or an appropriate angle that will not transmit intolerable swelling pressures from the expansive soil to the foundation. The foundation shall be constructed in the

excavation as quickly as practical. Spread footing foundations shall be overexcavated 600 mm in both depth and width and replaced with a pad of nonswelling, low permeable material.

Excavations below indicated depths will not be permitted except to remove unsatisfactory material. Unsatisfactory material encountered below the grades shown shall be removed as directed and replaced with satisfactory material. Payment therefor will be made in conformance with the CHANGES clause of the CONTRACT CLAUSES. Satisfactory material removed below the depths indicated without specific direction of the Contracting Officer shall be replaced at no additional cost to the Government to the indicated excavation grade with satisfactory materials, except that concrete footings shall be increased in thickness to the bottom of the overdepth excavations. Satisfactory material shall be placed and compacted as specified in paragraph FILLING AND BACKFILLING. Determination of elevations and measurements of approved overdepth excavation of unsatisfactory material below grades indicated shall be done under the direction of the Contracting Officer.

3.4 DRAINAGE AND DEWATERING

3.4.1 Drainage

Surface water shall be directed away from excavation and construction sites so as to prevent erosion and undermining of foundations. Diversion ditches, dikes and grading shall be provided and maintained as necessary during construction. Excavated slopes and backfill surfaces shall be protected to prevent erosion and sloughing. Excavation shall be performed so that the site and the area immediately surrounding the site and affecting operations at the site shall be continually and effectively drained.

3.4.2 Dewatering

Groundwater flowing toward or into excavations shall be controlled to prevent sloughing of excavation slopes and walls, boils, uplift and heave in the excavation and to eliminate interference with orderly progress of construction. French drains, sumps, ditches or trenches will not be permitted within 900 mm of the foundation of any structure, except with specific written approval, and after specific contractual provisions for restoration of the foundation area have been made. Control measures shall be taken by the time the excavation reaches the water level in order to maintain the integrity of the in situ material. While the excavation is open, the water level shall be maintained continuously, at least 600 mm below the working level. The excavation shall be drained by pumping or other satisfactory methods to prevent softening of the foundation bottom, undercutting of footings, or other actions detrimental to proper construction procedures. Ground water shall not be permitted to accumulate in excavations and shall be dewatered by pumping or other satisfactory methods to prevent detrimental effects to proper construction procedures.

3.5 SHORING

Shoring, including sheet piling, shall be furnished and installed as necessary to protect workmen, banks, adjacent paving, structures, and utilities. Shoring, bracing, and sheeting shall be removed as excavations are backfilled, in a manner to prevent caving.

3.6 CLASSIFICATION OF EXCAVATION

Excavation will be unclassified regardless of the nature of material encountered.

3.7 BLASTING

Blasting will not be permitted.

3.8 UTILITY AND DRAIN TRENCHES

Trenches for underground utilities systems and drain lines shall be excavated to the required alignments and depths. The bottoms of trenches shall be graded to secure the required slope and shall be tamped if necessary to provide a firm pipe bed. Recesses shall be excavated to accommodate bells and joints so that pipe will be uniformly supported for the entire length.

3.9 BORROW

Where satisfactory materials are not available in sufficient quantity from required excavations, approved materials shall be obtained from sources outside the limits of Government-controlled land and as specified in SECTION: 02300, EARTHWORK.

3.10 EXCAVATED MATERIALS

Satisfactory excavated material required for fill or backfill shall be placed in the proper section of the permanent work required under this section or shall be separately stockpiled if it cannot be readily placed. Satisfactory excavated clayey materials stockpiled for later use shall be covered to prevent change in moisture content. Satisfactory excavated materials shall not be mixed with unsatisfactory materials. Satisfactory material in excess of that required for the permanent work and all unsatisfactory material shall be disposed of outside the limits of Government-controlled land. Unsatisfactory materials shall not cover available suitable materials.

3.11 FINAL GRADE OF SURFACES TO SUPPORT CONCRETE

Excavation to final grade shall not be made until just before concrete is to be placed.

3.12 SUBGRADE PREPARATION

Unsatisfactory material in surfaces to receive fill or in excavated areas shall be removed and replaced with satisfactory materials. The surface shall be scarified to a depth of 150 mm before the fill is started. Sloped surfaces steeper than 1 vertical to 4 horizontal shall be plowed, stepped, benched, or broken up so that the fill material will bond with the existing material. When subgrades are less than the specified density, the ground surface shall be broken up to a minimum depth of 150 mm, pulverized, and compacted to the specified density. When the subgrade is part fill and part excavation or natural ground, the excavated or natural ground portion shall be scarified to a depth of 300 mm and compacted as specified for the adjacent fill. Material shall not be placed on surfaces that are muddy, frozen, or contain frost. Compaction shall be accomplished by sheepsfoot rollers, pneumatic-tired rollers, steel-wheeled rollers, or other approved equipment well suited to the soil being compacted. Material shall be moistened or aerated as necessary to provide the moisture content that will readily facilitate obtaining the specified compaction with the equipment used. Minimum subgrade density shall be as specified in paragraph FILLING AND BACKFILLING.

3.13 SOIL TREATMENT

Just prior to placing concrete slab on grade and basement slab and just prior to backfilling around concrete or masonry foundations for structures, soil treatment shall be applied. The Contractor shall notify and submit to the Contracting Officer and Malmstrom Air Force Base Civil Engineer/Entomology Section at least 15 days in advance before applying the soil treatment as specified in paragraph SUBMITTALS relating to soil treatment agent. Soil treatment agents shall be delivered to the jobsite in sealed and labeled containers bearing the manufacturer's warnings to be observed in the handling and use of soil treatment agents. Labels shall bear evidence of registration under the Federal Insecticide, Fungicide, and Rodenticide Act and shall provide recommended rates of application. Soil treatment agent shall be isofenphos, fenvalerate, cypermethrin, permethrin, or chlorphyrifos in concentrations as recommended by the manufacturer. Other soil treatment agents may be used with prior approval of the Contracting Officer and Malmstrom Air Force Base, Base Civil Engineering/Entomology Section. Soil treatment agents shall be applied by licensed and certified pest control specialists subject to approval by Malmstrom Air Force Base, Base Civil Engineering/Entomology Section and the Contracting Officer.

3.14 FILLING AND BACKFILLING

Satisfactory materials shall be used in bringing fills and backfills to the lines and grades indicated and for replacing unsatisfactory materials. Satisfactory materials shall be placed in horizontal layers not exceeding 200 mm in loose thickness, or 150 mm when hand-operated compactors are used. After placing, each layer shall be plowed, disked, or otherwise broken up, moistened or aerated as necessary, thoroughly mixed and compacted as specified. Backfilling shall not begin until construction below finish grade has been approved, underground utilities systems have been inspected, tested and approved, forms removed, and the excavation cleaned of trash and debris. Backfill shall be brought to indicated finish grade. Backfill shall not be placed in wet or frozen areas. Where pipe is coated or wrapped for protection against corrosion, the backfill material up to an elevation 600 mm above sewer lines and 300 mm above other utility lines shall be free from stones larger than 25 mm in any dimension. Heavy equipment for spreading and compacting backfill shall not be operated closer to foundation or retaining walls than a distance equal to the height of backfill above the top of footing; the area remaining shall be compacted in layers not more than 100 mm in compacted thickness with power-driven hand tampers suitable for the material being compacted. Backfill shall be placed carefully around pipes or tanks to avoid damage to coatings, wrappings, or tanks. Backfill shall not be placed against foundation walls prior to 7 days after completion of the walls. As far as practicable, backfill shall be brought up evenly on each side of the wall and sloped to drain away from the wall. Each layer of fill and backfill shall be compacted to not less than the percentage of maximum density specified below:

	Percent Laboratory maximum density	
	Cohesive Material	Cohesionless Material
Fill, embankment, and backfill		
Under structures, building slabs, steps, paved areas, around footings, and in trenches	90	95
Under sidewalks and grassed areas	85	90
Expansive materials	90	
Moisture content shall not be less than 1 percent below optimum and not more than 4 percent above optimum.		
Nonfrost susceptible materials	--	95
Subgrade		
Under building slabs, steps, and paved areas, top 12 inches	90	95
Under sidewalks, top 6 inches	85	90

Approved compacted subgrades that are disturbed by the Contractor's operations or adverse weather shall be scarified and compacted as specified herein before to the required density prior to further construction thereon. Recompaction over underground utilities and heating lines shall be by hand tamping.

Compacted subgrades, fills, embankments, and backfills, that are distributed by the Contractor's operations or by adverse weather before acceptance by the Contracting Officer shall be scarified and compacted at the specified moisture content to the required density before the continuation of construction. Any field density test results indicating the density does not meet specifications shall be followed immediately with a second field density test and a corresponding laboratory quality control test at no additional cost to the Government. The location of the second field density test shall be in the same lift and within 3 meters of the first test and along the direction of travel of the compaction equipment. Should the second field density test also indicate insufficient density, filling or backfilling shall cease in the affected area until all deficiencies have been correction. Inadequate materials shall be removed, reworked, or replaced, compacted and tested at no additional cost to the Government. Recompaction over underground utilities and heating lines shall be by

hand tampering. Compaction requirements in trenches shall conform to applicable portions of SECTION: EXCAVATION, TRENCHING, AND BACKFILLING FOR UTILITIES SYSTEMS.

3.15 TESTING

Testing shall be the responsibility of the Contractor and shall be performed at no additional cost to the Government. Testing shall be performed by an approved commercial testing laboratory. Testing facilities and personnel shall meet the requirements of ASTM D 3740 and SECTION: CONTRACTOR QUALITY CONTROL. Field in- place density shall be determined in accordance with ASTM D 1556. Moisture-density relations shall be determined in accordance with ASTM D 1557. The minimum number of tests, acceptable for each type of operation shall be in accordance with SECTION: CONTRACTOR QUALITY CONTROL.

3.16 CAPILLARY WATER BARRIER (Not Applicable)

3.17 GRADING

Areas within 1.5 meters outside of each building and structure line shall be constructed true-to-grade, shaped to drain, and shall be maintained free of trash and debris until final inspection has been completed and the work has been accepted.

3.18 SPREADING TOPSOIL

Areas outside the building lines from which topsoil has been removed shall be restored as shown on the plans and specified in SECTION: SODDING. The surface shall be free of materials that would hinder planting or maintenance operations. The subgrade shall be pulverized to a depth of 50 mm by disking or plowing for the bonding of topsoil with the subsoil. Topsoil shall then be uniformly spread, graded, and compacted to the thickness, elevations, slopes shown, and left free of surface irregularities. Topsoil shall be compacted by one pass of a cultipacker, roller, or other approved equipment weighing 150 to 240 kg per linear meter of roller unless otherwise specified in SECTION: SODDING. Topsoil shall not be placed when the subgrade is frozen, excessively wet, extremely dry, or in a condition otherwise detrimental to seeding, planting, or proper grading.

3.19 PROTECTION

Settlement or washing that occurs in graded, topsoiled, or backfilled areas prior to acceptance of the work shall be repaired and grades reestablished to the required elevations and slopes.

END OF SECTION

This page intentionally blank

SECTION 02316

EXCAVATION, TRENCHING, AND BACKFILLING FOR UTILITIES SYSTEMS

PART 1 GENERAL

1.1 SUMMARY (Not Applicable)

1.2 REFERENCES

The publications listed below form a part of this specification to the extent referenced. The publications are referred to in the text by basic designation only.

AMERICAN SOCIETY FOR TESTING AND MATERIALS (ASTM)

ASTM D 422	(1963; R 1990) Particle-Size Analysis of Soils
ASTM D 1556	(1990) Density of Soil in Place by the Sand-Cone Method
ASTM D 1557	(1978; R 1991) Moisture-Density Relations of Soils and Soil-Aggregate Mixtures Using 4.54 kilograms (kg) Rammer and 457-millimeters (mm) Drop
ASTM D 2167	(1984; R 1990) Density and Unit Weight of Soil in Place by the Rubber Balloon Method
ASTM D 2217	Wet Preparation of Soil Samples for Particle-Size Analysis and Determination of Soil Particles
ASTM D 2487	(1990) Classification of Soils for Engineering Purposes
ASTM D 2922	(1981, R 1990) Density of Soil and Soil-Aggregate in Place by Nuclear Methods (Shallow Depth)
ASTM D 3017	(1988) Water Content of Soil and Rock in Place by Nuclear Methods (Shallow Depth)
ASTM D 3740	Evaluation of Agencies Engaged in the Testing and/or Inspection of Soil and Rock as Used in Engineering Design and Construction
ASTM D 4318	(1984) Liquid Limit, Plastic Limit, and Plasticity Index of Soils

U.S. Army Corps of Engineers Manual:

EM 385-1-1	Safety and Health Requirements

1.3 MEASUREMENT AND PAYMENT (Not Applicable)

1.4 DEFINITIONS

1.4.1 Degree of Compaction

Degree of compaction shall be expressed as a percentage of the maximum density obtained by the test procedure presented in ASTM D 1557.

1.4.2 Moisture Control

Except for seeded, turfed, and miscellaneous unpaved and open areas, moisture content of local clayey materials used as backfill shall be between 1 percent below and 4 percent above optimum moisture content at time of compaction.

1.5 SUBMITTALS

Government approval is required for submittals with a "GA" designation; submittals having an "FIO" designation are for information only. The following shall be submitted in accordance with SECTION: SUBMITTAL PROCEDURES:

SD-09 Reports

Field Density Tests; GA. Testing of Backfill Materials; GA.

Copies of all laboratory and field test reports within 24 hours of the completion of the test.

PART 2 PRODUCTS

2.1 MATERIALS

2.1.1 Satisfactory Materials

Satisfactory materials shall consist of any material classified by ASTM D 2487 as GW, GP, SP, and SW. Materials classified as CL, CH, SP-SM, GP-GM, SM, GM or GC are also satisfactory provided that they contain moisture content suitable for the intended use.

2.1.2 Unsatisfactory Materials

Unsatisfactory materials shall be materials that do not comply with the requirements for satisfactory materials. Unsatisfactory materials include but are not limited to those materials containing roots and other organic matter, trash, debris, frozen materials and stones larger than 75 mm, and materials classified in ASTM D 2487, as PT, OH, and OL. Unsatisfactory materials also include man-made fills, refuse, or backfills from previous construction. Foundations and/or foundation debris from previous construction are unsatisfactory.

2.1.3 Cohesionless and Cohesive Materials

Cohesionless materials shall include materials classified in ASTM D 2487 as GW, GP, SW, and SP. Cohesive materials include materials classified as GC, SC, ML, CL, MH, and CH. Materials classified as GM and SM will be identified as cohesionless only when the fines are nonplastic. Liquid limit and plasticity index shall be determined in accordance with ASTM D 4318 using ASTM D 2217, Procedure B.

2.1.4 Rock (Not Applicable)

2.1.5 Unyielding Material

Unyielding material shall consist of gravelly soils with stones greater than 75 mm in any dimension or as defined by the pipe manufacturer, whichever is smaller.

2.1.6 Unstable Material

Unstable material shall consist of materials too wet to properly support the utility pipe, conduit, or appurtenant structure.

2.1.7 Select Granular Material for Utilities

Select granular material shall consist of well-graded sand, gravel, crushed gravel, crushed stone or crushed slag composed of hard, tough and durable particles, and shall contain not more than 10 percent by weight of material passing a 0.075 mm mesh sieve and 20 percent to 40 percent by weight passing the 4.75 mm sieve. The maximum allowable aggregate size shall be 75 mm, or the maximum size recommended by the pipe manufacturer, whichever is smaller.

2.1.8 Initial Backfill Material

Initial backfill shall consist of select granular material or satisfactory materials free from rocks 50 mm or larger in any dimension or free from rocks of such size as recommended by the pipe manufacturer, whichever is smaller. When the pipe is coated or wrapped for corrosion protection, the initial backfill material shall be free of stones larger than 25 mm in any dimension or as recommended by the pipe manufacturer, whichever is smaller.

2.1.9 Plastic Marking Tape

Plastic marking tape shall be acid and alkali-resistant polyethylene film, 150 mm wide with minimum thickness of 0.1 mm. Tape shall have a minimum strength of 12 megapascals (MPa) lengthwise and 10.3 MPa crosswise. The tape shall be manufactured with integral wires, foil backing or other means to enable detection by a metal detector when the tape is buried up to 900 mm deep. The tape shall be of a type specifically manufactured for marking and locating underground utilities. The metallic core of the tape shall be encased in a protective jacket or provided with other means to protect it from corrosion. Tape color shall be as specified in TABLE 1 and shall bear a continuous printed inscription describing the specific utility.

TABLE 1. Tape Color

Red:	Electric
Yellow:	Gas, Oil, Dangerous Materials
Orange:	Telephone, Telegraph, Television, Police, and Fire Communications
Blue:	Water Systems
Green:	Sewer Systems

2.1.10 BORROW MATERIAL

Borrow material shall be selected to meet requirements and conditions of the particular fill for which it is to be used.

2.1.10.1 Selection

Borrow materials shall be obtained from sources outside the limits of Government-controlled land. Borrow materials shall be subject to approval. The source of borrow material shall be the Contractor's responsibility. The Contractor shall obtain from the owners the right to procure material, shall pay all royalties and other charges involved, and shall bear all the expense of developing the sources, including rights-of-way for hauling and maintenance of the borrow source.

PART 3 EXECUTION

3.1 EXCAVATION

Excavation of every description and of whatever substances encountered shall be performed to the lines and grades indicated. Excavation shall be unclassified. During excavation, material satisfactory for backfilling shall be stockpiled in an orderly manner at a distance from the banks of the trench equal to 1/2 the depth of the excavation, but in no instance closer than 600 mm. Excavated material not required or not satisfactory for backfill shall be removed from the site and shall be disposed of outside the limits of Government-controlled land and at the Contractor's responsibility. Unsatisfactory materials shall not cover available suitable materials. Grading shall be done as may be necessary to prevent surface water from flowing into the excavation, and any water accumulating therein shall be removed to maintain the stability of the bottom and sides of the excavation. Unauthorized overexcavation shall be backfilled in accordance with paragraph BACKFILLING at no additional cost to the Government.

3.1.1 Trench Excavation

The trench shall be excavated as recommended by the manufacturer of the pipe to be installed. Trench walls below the top of the pipe shall be sloped, or made vertical, and of such width as recommended in the manufacturer's installation manual. Where no manufacturer's installation manual is available, trench walls shall be excavated to a stable angle of repose as required to properly complete the work. The excavation shall be completed as quickly as possible to the design depth to protect the foundation soils from drying or infiltration of additional moisture. If the excavation is to remain open for more than 3 days for foundations or 7 days for paving areas, an impervious moisture barrier shall be applied to the newly exposed surfaces of the excavation to prevent moisture content change of the foundation soils. This may consist of sprayed-on emulsion or cutback asphalt, white pigmented curing compound, or plastic sheeting. Sprayed-on asphalt or curing compound shall be applied at a rate of 0.5 liters per square meter over the entire surface of the subgrade including excavation backslopes, trenches, and foundation of structures. Trench excavations shall adhere to requirements prescribed in EM 385-1-1, Safety and Health Requirements Manual. Special attention shall be given to slopes which may be adversely affected by weather or moisture content. The trench width below the top of pipe shall not exceed 600 mm plus pipe outside diameter (O.D.) for pipes of less than 600 mm inside diameter and shall not exceed 900 mm plus pipe outside diameter for sizes larger than 600 mm inside diameter. Where recommended trench widths are exceeded, redesign, stronger pipe, or special installation procedures shall be utilized by the Contractor. The cost of redesign, stronger pipe, or special installation procedures shall be borne by the Contractor without any additional cost to the Government.

3.1.1.1 Bottom Preparation

The bottoms of trenches shall be accurately graded to provide uniform bearing and support for the bottom quadrant of each section of the pipe. Bell holes shall be excavated to the necessary size at each joint or coupling to eliminate point bearing. Stones of 75 mm or greater in any dimension, or as recommended by the pipe manufacturer, whichever is smaller, shall be removed to avoid point bearing.

3.1.1.2 Removal of Unyielding Material

Where unyielding material is encountered in the bottom of the trench, such material shall be removed 100 mm below the required grade and replaced with suitable materials as provided in paragraph BACKFILLING.

3.1.1.3 Removal of Unstable Material

Where unstable material is encountered in the bottom of the trench, such material shall be removed to the depth directed and replaced to the proper grade with select granular material as provided in paragraph BACKFILLING. When removal of unstable material is required due to the fault or neglect of the Contractor in his performance of the work, the resulting material shall be excavated and replaced by the Contractor without additional cost to the Government.

3.1.1.4 Excavation for Appurtenances

Excavation for manholes, catch-basins, inlets, or similar structures shall be of sufficient size to permit the placement and removal of forms for the full length and width of structure footings and foundations as shown. Removal of unstable material shall be as specified above. When concrete or masonry is to be placed in an excavated area, special care shall be taken not to disturb the bottom of the excavation. Excavation to the final grade level shall not be made until just before the concrete or masonry is to be placed.

3.1.1.5 Jacking, Boring, and Tunneling

Unless otherwise indicated, excavation shall be by open cut except that sections of a trench may be jacked, bored, or tunneled if, in the opinion of the Contracting Officer, the pipe, cable, or duct can be safely and properly installed and backfill can be properly compacted in such sections.

3.1.1.6 Stockpiles

Stockpiles of satisfactory materials shall be placed and graded as specified. Stockpiles shall be kept in a neat and well drained condition, giving due consideration to drainage at all times. Local clayey materials shall be covered to prevent change in moisture content. The ground surface at stockpile locations shall be cleared, grubbed, and sealed by rubber-tired equipment, excavated satisfactory and unsatisfactory materials shall be separately stockpiled. Stockpiles of satisfactory materials shall be protected from contamination which may destroy the quality and fitness of the stockpiled material. If the Contractor fails to protect the stockpiles, and any material becomes unsatisfactory, such material shall be removed and replaced with satisfactory material from approved sources at no additional cost to the Government. Locations of stockpiles of satisfactory materials shall be subject to prior approval of the Contracting Officer.

3.2 BACKFILLING

Backfill material shall consist of satisfactory clayey material, select granular material, or initial backfill material as required. Backfill shall be placed in layers not exceeding 150 mm loose thickness for compaction by hand operated machine compactors, and 200 mm loose thickness for other than hand operated machines, unless otherwise specified. Each layer shall be compacted to at least 95 percent maximum density for cohesionless soils and 90 percent maximum density for cohesive soils, unless otherwise specified. The first 150 mm of backfill material directly above PVC or copper pipes shall not be compacted. The backfill shall be brought up evenly on both sides of the pipe for the full length. Care shall be taken to ensure thorough compaction of the full under the haunch of the pipe. Material required for backfills in excess of that produced by excavation shall be obtained from borrow areas.

3.2.1 Trench Backfill

Trenches shall be backfilled to the grade shown. The trench shall be backfilled to 600 mm above the top of pipe prior to performing the required pressure tests. The joints and couplings shall be left uncovered during the pressure test. The remainder of the trench shall not be backfilled until all specified tests are performed.

3.2.1.1 Replacement of Unyielding Material

Unyielding material removed from the bottom of the trench shall be replaced with select granular material or initial backfill material.

3.2.1.2 Replacement of Unstable Material

Unstable material removed from the bottom of the trench or excavation shall be replaced with select granular material placed in layers not exceeding 150 mm loose thickness.

3.2.1.3 Bedding and Backfill Material: Bedding shall be of the type and thickness shown. Bedding shall be free from organic matter and conforming to the following gradation when tested in accordance with ASTM D 422.

U.S. Standard Sieve Size	Percent Passing
25 mm	100
4.75 mm	40-80
0.075 mm	8-20

Except for high temperature hot water lines, backfill shall consist of clayey material free from stones of such size as recommended by the pipe manufacturer, or larger than 50 mm in any dimension, whichever is smaller, except that where the pipe is coated or wrapped for protection against corrosion, the backfill material shall be free of stones larger than 25 mm in any dimension or as recommended by the pipe manufacturer, whichever is smaller. For high temperature hot water lines backfill shall consist of granular material up to 300 mm from finished ground surface. The granular material shall conform to the bedding gradation. The remaining top 300 mm of trench shall be backfilled with clayey or silty material for high temperature hot water lines.

3.2.1.4 Final Backfill

The remainder of the trench, except for special materials for roadways shall be filled as specified in paragraph 3.2.1.3. Backfill material shall be placed and compacted as follows:

3.2.1.4.1 Roadways

Backfill shall be placed up to the elevation at which the requirements in SECTION: EARTHWORK control. Water flooding or jetting methods of compaction will not be permitted.

3.2.1.4.2 Sidewalks, Turfed or Seeded Areas and Miscellaneous Areas

Backfill shall be deposited in layers of a maximum of 300 mm thickness, and compacted to 85 percent maximum density for cohesive soils and 90 percent maximum density for cohesionless soils. Compaction by water flooding or jetting will not be permitted. This requirement shall also apply to all other areas not specifically designated above.

3.2.2 Backfill for Appurtenances

After the manhole, catch basin, inlet, or similar structure has been constructed and the concrete has been allowed to cure for at least 3 days, backfill shall be placed in such a manner that the structure will not be damaged by the shock of falling earth. The backfill material shall be deposited and compacted as specified for final backfill, and shall be brought up evenly on all sides of the structure to prevent eccentric loading and excessive stress.

3.3 SPECIAL REQUIREMENTS

Special requirements for both excavation and backfill relating to the specific utilities are as follows:

3.3.1 Gas Distribution

Trenches shall be excavated to a depth that will provide not less than 600 mm of cover. Trenches shall be graded as specified for pipe-laying requirements in SECTION: GAS DISTRIBUTION SYSTEM.

3.3.2 Water Lines

Trenches shall be of a depth to provide a minimum cover of 1830 mm from the existing ground surface, or from the indicated finished grade, whichever is lower, to the top of the pipe.

3.3.3 Heat Distribution System

Initial backfill material shall be free of stones larger than 6.5 mm in any dimension.

3.3.4 Electrical Distribution System

Direct burial cable and conduit or duct line shall have a minimum cover of 600 mm from the finished grade, unless otherwise indicated. Special trenching requirements for direct-burial electrical cables and conduits are specified in SECTION: ELECTRICAL DISTRIBUTION SYSTEM, UNDERGROUND.

3.3.5 Plastic Marking Tape

Warning tapes shall be installed directly above the pipe, at a depth of 450 mm below finished grade unless otherwise shown.

3.4 TESTING

Testing shall be the responsibility of the Contractor and shall be performed at no additional cost to the Government. Number of tests shall be in accordance with SECTION: CONTRACTOR QUALITY CONTROL.

3.4.1 Testing Facilities

Tests shall be performed by an approved commercial testing laboratory Approval of testing facilities and personnel shall be based on compliance with ASTM D 3740 and in accordance with SECTION: CONTRACTOR QUALITY CONTROL.

3.4.2 Testing of Backfill Materials

Characteristics of backfill materials shall be determined in accordance with particle size analysis of soils ASTM D 422 and laboratory tests for moisture-density relations of soils in accordance with ASTM D 1557. A mechanical tamper may be used, provided the results are correlated with those obtained by the referenced hand tamper or ASTM D 1557. Field in-place density shall be determined in accordance with ASTM D 1556. Trenches improperly compacted shall be reopened to the depth directed, then refilled and compacted to the density specified at no additional cost to the Government.

3.4.3 Field Density Tests

Tests shall be performed in sufficient numbers to ensure that the specified density is being obtained. Field in-place density shall be determined in accordance with ASTM D 1556. Trenches improperly compacted shall be reopened to the depth directed, then refilled and compacted to the density specified at no additional cost to the Government.

3.4.4 Displacement of Sewers

After other required tests have been performed and the trench backfill compacted to 600 mm above the top of the pipe, the pipe shall be inspected to determine whether significant displacement has occurred. This inspection shall be conducted in the presence of the Contracting Officer. Pipe sizes larger than 900 mm shall be entered and examined, while smaller diameter pipe shall be inspected by shining a light or laser between manholes or manhole locations, or by the use of television cameras passed through the pipe. If, in the judgment of the Contracting Officer, the interior of the pipe shows poor alignment or any other defects that would cause improper functioning of the system, the defects shall be remedied as directed at no additional cost to the Government.

END OF SECTION

SECTION 02383

DRILLED FOUNDATION CAISSONS (PIERS)

PART 1 GENERAL

1.1 REFERENCES

The publications listed below form a part of this specification to the extent referenced. The publications are referred to in the text by basic designation only.

AMERICAN SOCIETY FOR TESTING AND MATERIALS (ASTM)

ASTM A 615	(1994) Deformed and Plain Billet-Steel Bars for Concrete Reinforcement
ASTM D 1227	Emulsified Asphalt Used as a Protective Coating for Roofing
ASTM D 1586	(1984; R 1992) Penetration Test and Split-Barrel Sampling of Soils

AMERICAN WELDING SOCIETY (AWS)

AWS D1.1	(1994) Structural Welding Code - Steel
AWS D1.4	(1992) Structural Welding Code - Reinforcing Steel

1.2 BASIS OF BID AND UNIT PRICES

1.2.1 Caissons

The bid shall be based on a unit price per linear meter of cassion installed. The total lengths shall be based on the number and total length of caissons, established by top and bottom elevations and diameters, as indicated and specified. Additional lengths of caissons as required will be based on unit price per linear meter. The Contractor will not be allowed payment for rejected caissons or for those not conforming to specifications.

1.2.2 Tests

1.2.2.1 Penetration Test

Contract shall include one penetration test at the bottom of each cassion indicated on the plans as specified. The bid for penetration tests shall be based on a unit price per test. Adjustments in the contract price will be made for each such increase by the amount bid for "Additional Penetration Test".

1.3 SUBMITTALS

Government approval is required for submittals with a "GA" designation; submittals having an "FIO" designation are for information only. The following shall be submitted in accordance with SECTION: SUBMITTAL PROCEDURES:

SD-01 Data

Drilled Foundation Caissons; GA.

A certified copy of the survey. Lines and levels shall be established and caisson centerline locations staked and maintained by a registered surveyor or engineer provided by the Contractor.

SD-08 Statements

Qualifications; GA.

Qualifications of the foundation system Contractor shall show that he has been engaged in the successful installation of drilled foundation caissons for at least 5 years.

SD-09 Reports

Penetration Tests; GA.

Test Results.

SD-18 Records

Drilled Foundation Caissons; GA.

Detailed records in an approved form, for each caisson, showing shaft and bell diameters, depths of test holes, top and bottom elevations, bearing strata description, casing description, water conditions, concrete strength, concrete volume, rock elevations, dates of excavation and concrete placement, and other pertinent information. Upon completion of caisson work, the Contractor shall provide a record of centerline locations based on the survey of the registered surveyor or engineer provided by the Contractor. In addition, corrective measures shall be similarly recorded. A complete tabulation of all records pertaining to approved caissons shall be delivered to the Contracting Officer.

1.4 QUALIFICATIONS

1.4.1 Specialty Subcontractor

The work shall be performed by a specialty subcontractor, specializing in the specified foundation system and having experience installing the specified foundation system under similar subsurface conditions.

1.4.2 Welding

Detail and field welding shall be in accordance with AWS D1.1. Qualification of welding procedures, welders, and welding operators shall be in accordance with AWS D1.1, Section 5. Records of test results of welding procedures not prequalified and copies of records for each qualified welding operator, containing records on positions of welding and types of electrode qualifications, shall be kept by the Contractor and be available for examination by the Contracting Officer.

1.5 PROJECT/SITE CONDITIONS

1.5.1 Subsurface Data

Subsurface soil data logs are shown on the drawings.

1.5.2 Caisson Drilling Equipment

Caisson drilling equipment shall have the minimum torque capacity and downward force capacity for the contract site conditions.

1.6 SEQUENCE OF WORK

1.6.1 Caisson Excavation

Excavation of caissons or groups of caissons shall be performed so that reinforcing steel and concrete placement is a continuous operation performed the same day that the excavation is completed. Excavations shall not be left open overnight.

1.6.2 Acceptance

Concrete shall be placed within 3 hours after approval of the completed excavation.

1.7 SUPERVISION, INSPECTION, AND SAFETY

1.7.1 Contractor Supervision

The Contractor shall provide for the supervision of all phases of drilled pier construction. The Contractor shall obtain the services of a Geotechnical Engineer to oversee all aspects of drilled pier installation, including but not limited to preparation, excavation, sampling, testing, etc. The Geotechnical Engineer shall have experience with this type of construction. Supervision shall be the Contractor's responsibility as outlined in Quality Control provisions of the specification SECTION: CONTRACTOR QUALITY CONTROL. Each drilled pier excavation shall be checked by the Contractor for its depth, water removal, cleanup, workmanship, and for all tolerance requirements before any concrete is placed.

1.7.2 Government Inspection

The Contracting Officer shall have the option to inspect each drilled pier excavation ~~as directed~~. Concrete shall not be placed until the excavation has been approved by the Contracting Officer. The Contractor shall furnish the Contracting Officer all necessary equipment and personnel required for proper inspection of drilled pier excavations, including depth, water condition in bottom, cleanliness of bottom, vertical plum, and dimensions of shaft and bell. The Contractor shall provide satisfactory remote monitoring equipment with videotape capabilities and personnel to operate remote monitoring equipment for inspection of the drilled cassions. Remote monitoring equipment must be utilized for uncased drilled cassions.

PART 2 PRODUCTS

2.1 CONCRETE WORK

Concrete work shall be in accordance with requirements of SECTION: 03300, CAST-IN-PLACE STRUCTURAL CONCRETE, as modified herein:

2.1.1 Coarse Aggregate

Maximum size of coarse aggregate shall be 19 millimeters (mm).

2.1.2 Reinforcing Steel

Reinforcing steel shall conform to ASTM A 615 Grade 60. Steel shall be tied or welded into cages in accordance with AWS D1.4 and inserted securely in the caissons, in position and alignment, as shown, prior to concrete placement. For tied cages, stiffeners or crossbars shall be installed to prevent racking or twisting of the cage during placing and positioning. Cages shall be protected from damage during lifting and placement into the shafts. Mechanical connectors for splicing longitudinal bars and spiral bars shall have a strength equal to 125 percent of the spliced bars yield strength.

2.1.3 Strength

Concrete strength shall be 27.5 MPa at 28 days. Slump shall be from 75 mm to 150 mm.

2.1.4 Admixtures. All concrete shall contain an approved water reducing admixture which will increase cohesion in the concrete mix and will not promote bleeding. Water reducing admixture shall conform to ASTM C 494, Type A.

PART 3 EXECUTION

3.1 PREPARATION

a. Excavate caissons to established depths and dimensions shown. Bottoms of caissons shall be cleaned of all loose or soft material and leveled. Excavated material shall be disposed of in accordance with SECTION: 2300, EARTHWORK.

b. In drilling caissons, the surrounding soil and the earth walls shall be adequately and securely protected against cave-ins, displacement of the surrounding earth, and retention of ground water by means of temporary steel casings. The temporary casings shall have outside diameters not less than indicated shaft sizes, shall be a minimum of 6.4 mm thick, and shall not be removed if the structural integrity of the caisson will be impaired, as determined by the Contracting Officer. If the temporary steel casings are to remain in place then adjustments to the contract will be made in accordance with the CONTRACT CLAUSES of the contract. Temporary steel casings shall be withdrawn, as the concrete is being placed, maintaining sufficient head of concrete within the casing to prevent extraneous material from falling in from the sides and mixing with the concrete. Casings may be jerked upward a maximum of 100 mm to break the bottom seal but thereafter remove with a smooth, continuous motion.

c. The inside of steel casings shall be thoroughly cleaned and oiled before reuse.

d. The temporary casing shall be in place from the caisson top to the ground surface until the concrete has set if the elevation of the top of the caisson is below the adjacent ground surface.

e. Water that flows into the excavations shall be continuously removed and all water shall be removed from the excavation bottom, to the extent possible, prior to concrete placement. The maximum permissible depth of water will be 50 mm. In the event of a severe water condition that makes it impossible or impractical to dewater the excavation, concrete shall be placed using underwater tremie after water movement has stabilized.

f. The bottoms of excavations indicated to be "belled" shall be enlarged to diameters and shapes shown. Bells shall be excavated or drilled in a similar manner to that used for shafts.

g. Each caisson excavation will be inspected and approved by the Contracting Officer prior to placing concrete. A record of all inspection with related construction changes in connection therewith, shall

be kept by the Contractor. The Contractor shall provide support personnel for inspection and testing procedures, including a Geotechnical Engineer to oversee all aspects of drilled pier installation.

3.2 INSTALLATION

a. Concrete shall be continuously placed by methods that insure against segregation and dislodging of excavation sidewalls and shall completely fill the shaft. Concrete shall be placed by pumping in dry holes and by tremie or pumping in wet holes. The discharge shall be kept a minimum of 1 m below the fresh concrete surface during placement. Drilling of caissons or driving of casings shall not be within 6 m of concrete placed within 3 days.

b. Concrete shall be brought to a true level surface inside the shaft and a full width cross key formed or dowels installed should it become necessary to interrupt placing concrete in any caisson. Prior to placing additional concrete, clean surfaces of laitance and slush with one-to-one portland cement grout. The grout shall have a water cement ratio not exceeding that of the concrete.

c. Concrete shall be vibrated for full height of caisson. Belled caissons shall be vibrated full height. Concrete shall be continuously vibrated and vibrators shall be kept at or below the level of the tremie or pump outlet. Vibration shall be concurrent with the concrete placement and vibrators shall be advanced up the length of the shaft along with the tremie or pump outlet.

3.3 TOLERANCES

a. Any caisson out of center or plumb beyond the tolerance specified shall be corrected as necessary to comply with the tolerances and the Contractor shall bear any cost of correction.

b. Cross sections of shafts and bells shall not be less than design dimensions.

c. Caissons shall be installed with top location deviating a maximum of 75 mm from centerline locations.

d. Vertical caissons shall be installed plumb within a maximum of 35 mm for the first 3 meters (m) and within 10 mm for each 3 m of additional depth.

3.4 PENETRATION TESTS

3.4.1 General

a. After excavation of a cassion (pier) to an elevation 450 mm above the design depth, a penetration test shall be performed in the bottom of the excavation to determine bearing conditions shall be made in accordance with ASTM D 1586.

b. The penetration test shall be made after the bottom of excavation is cleaned of all loose soil. Minimum blow count shall be 17 for the last 305 mm penetrated into undisturbed soil.

c. If the minimum blow count is not obtained, the shaft shall be drilled an additional 1.5 meters, cleaned of all loose soil, and the penetration test rerun. If the minimum blow count is obtained, then the cassions will be excavated to the design depth as indicated on the plans.

d. Reports shall be submitted to the Contracting Officer in accordance with ASTM D 1586.

3.4.2 Approvals

The Contracting Officer will approve tests and authorize subsequent drilling/excavation, concrete placement or initiate redesign procedures.

3.5 PROTECTION

Provide protection around top of the excavation to prevent debris from being dislodged into the excavation and concrete.

END OF SECTION

SECTION 02510

WATER DISTRIBUTION SYSTEM

PART 1 GENERAL

1.1 REFERENCES

The publications listed below form a part of this specification to the extent referenced. The publications are referred to in the text by basic designation only.

AMERICAN SOCIETY FOR TESTING AND MATERIALS (ASTM)

ASTM D 1784	(1996) Rigid Poly(Vinyl Chloride) (PVC) Compounds and Chlorinated Poly(Vinyl Chloride) (CPVC) Compounds
ASTM D 1785	(1996a) Poly(Vinyl Chloride) (PVC) Plastic Pipe, Schedules 40, 80, and 120
ASTM D 2464	(1996a) Threaded Poly(Vinyl Chloride) (PVC) Plastic Pipe Fittings, Schedule 80
ASTM D 2466	(1996a) Poly(Vinyl Chloride) (PVC) Plastic Pipe Fittings, Schedule 40
ASTM D 2467	(1996a) Poly(Vinyl Chloride) (PVC) Plastic Pipe Fittings, Schedule 80
ASTM D 2657	(1996) Heat Fusion Joining Polyolefin Pipe and Fittings
ASTM D 2774	(1994) Underground Installation of Thermoplastic Pressure Piping
ASTM D 3139	(1996a) Joints for Plastic Pressure Pipes Using Flexible Elastomeric Seals
ASTM F 477	(1995) Elastomeric Seals (Gaskets) for Joining Plastic Pipe
ASTM F 1483	(1993) Oriented Poly(Vinyl Chloride), PVCO, Pressure Pipe

AMERICAN WATER WORKS ASSOCIATION (AWWA)

AWWA B300	(1992) Hypochlorites
AWWA B301	(1992) Liquid Chlorine

AWWA ANSI/AWWA C110/A21.10	(1993) Ductile-Iron and Gray-Iron Fittings, 3 In. Through 48 In. (75# mm through 1200# mm), for Water and Other Liquids
AWWA ANSI/AWWA C502	(1994; C502a) Dry-Barrel Fire Hydrants
AWWA C651	(1992) Disinfecting Water Mains
AWWA ANSI/AWWA C700	(1995) Cold-Water Meters - Displacement Type, Bronze Main Case
AWWA C706	(1996) Direct-Reading, Remote-Registration Systems for Cold-Water Meters
AWWA C900	(1989; C900a) Polyvinyl Chloride (PVC) Pressure Pipe, 4 In. Through 12 In., for Water Distribution
AWWA C901	(1996) Polyethylene (PE) Pressure Pipe and Tubing, 1/2 In. Through 3 In., for Water Service
AWWA M23	(1980) Manual: PVC Pipe - Design and Installation

MANUFACTURERS STANDARDIZATION SOCIETY OF THE VALVE AND FITTINGS INDUSTRY (MSS)

MSS SP-80	(1997) Bronze Gate, Globe, Angle and Check Valves

NATIONAL FIRE PROTECTION ASSOCIATION (NFPA)

NFPA 24	(1995) Installation of Private Fire Service Mains and Their Appurtenances
NFPA 49	(1994) Hazardous Chemicals Data
NFPA 325-1	(1994) Fire Hazard Properties of Flammable Liquids, Gases, and Volatile Solids

NSF INTERNATIONAL (NSF)

NSF ANSI/NSF 14	(1996) Plastics Piping Components and Related Materials
NSF ANSI/NSF 61	(1997a) Drinking Water System Components - Health Effects (Sections 1-9)

STEEL STRUCTURES PAINTING COUNCIL (SSPC)

SSPC Paint 21	(1991) White or Colored Silicone Alkyd Paint

SSPC Paint 25	(1991) Red Iron Oxide, Zinc Oxide, Raw Linseed Oil and Alkyd Primer (Without Lead and Chromate Pigments)

1.2 PIPING

This section covers water distribution lines, and connections to building service at a point approximately 1.5 m outside buildings and structures to which service is required. The Contractor shall have a copy of the manufacturer's recommendations for each material or procedure to be utilized available at the construction site at all times.

1.2.1 Distribution Lines 80 mm or Larger

Piping for water distribution lines 80 mm or larger shall be polyvinyl chloride (PVC) through 900 mm nominal diameter plastic, Oriented PVC plastic filament-wound or centrifugally cast reinforced thermosetting resin, or reinforced concrete, unless otherwise shown or specified.

1.2.2 Sprinkler Supply Lines

Piping for water lines supplying sprinkler systems for building fire protection shall conform to NFPA 24 from the point of connection with the water distribution system to the building 1.5 m line.

1.2.3 Potable Water Lines

Piping and components of potable water systems which come in contact with the potable water shall conform to NSF ANSI/NSF 61.

1.2.4 Plastic Piping System

Plastic piping system components (PVC, polyethylene, thermosetting resin and reinforced plastic mortar pressure) intended for transportation of potable water shall comply with NSF ANSI/NSF 14 and be legibly marked with their symbol.

1.2.5 Excavation, Trenching, and Backfilling

Excavation, trenching, and backfilling shall be in accordance with the applicable provisions of Section 02316 EXCAVATION, TRENCHING, AND BACKFILLING FOR UTILITIES SYSTEMS, except as modified herein.

1.3 SUBMITTALS

Government approval is required for submittals with a "GA" designation; submittals having an "FIO" designation are for information only. The following shall be submitted in accordance with Section 01330 SUBMITTAL PROCEDURES:

SD-06 Instructions

Installation; FIO.

The manufacturer's recommendations for each material or procedure to be utilized.

SD-08 Statements

Waste Water Disposal Method; FIO.

The method proposed for disposal of waste water from hydrostatic tests and disinfection, prior to performing hydrostatic tests.

Satisfactory Installation; FIO.

A statement signed by the principal officer of the contracting firm stating that the installation is satisfactory and in accordance with the contract drawings and specifications, and the manufacturer's prescribed procedures and techniques, upon completion of the project and before final acceptance.

SD-09 Reports

Bacteriological Disinfection; FIO.

Test results from commercial laboratory verifying disinfection.

SD-13 Certificates

Meters; GA.

Manufacturer's certificate stating that each meter furnished has been tested for accuracy of registration and compliance with the accuracy and capacity requirements of the appropriate AWWA standard.

1.4 HANDLING

Pipe and accessories shall be handled to ensure delivery to the trench in sound, undamaged condition, including no injury to the pipe coating or lining. If the coating or lining of any pipe or fitting is damaged, the repair shall be made by the Contractor in a satisfactory manner, at no additional cost to the Government. No other pipe or material shall be placed inside a pipe or fitting after the coating has been applied. Pipe shall be carried into position and not dragged. Use of pinch bars and tongs for aligning or turning pipe will be permitted only on the bare ends of the pipe. The interior of pipe and accessories shall be thoroughly cleaned of foreign matter before being lowered into the trench and shall be kept clean during laying operations by plugging or other approved method. Before installation, the pipe shall be inspected for defects. Material found to be defective before or after laying shall be replaced with sound material without additional expense to the Government. Rubber gaskets that are not to be installed immediately shall be stored in a cool and dark place.

1.4.1 Miscellaneous Plastic Pipe and Fittings

Polyvinyl Chloride (PVC) and pipe and fittings shall be handled and stored in accordance with the manufacturer's recommendations. Storage facilities shall be classified and marked in accordance with NFPA 704, with classification as indicated in NFPA 49 and NFPA 325-1.

PART 2 PRODUCTS

2.1 PIPE

Pipe shall conform to the respective specifications and other requirements specified below.

2.1.1 Plastic Pipe

2.1.1.1 PE Plastic Pipe

Pipe, tubing, and heat-fusion fittings shall conform to AWWA C901.

2.1.1.2 PVC Plastic Pipe

Pipe, couplings and fittings shall be manufactured of material conforming to ASTM D 1784, Class 12454B.

a. Pipe 100 through 300 mm Diameter: Pipe, couplings and fittings shall conform to AWWA C900, Class 150, CIOD pipe dimensions, elastomeric-gasket joint, unless otherwise shown or specified.

2.1.1.3 Oriented Polyvinyl Chloride (PVCO) Plastic Pipe

Pipe, couplings, and fittings shall be manufactured of material conforming to ASTM D 1784, Class 1245B. Pipe shall conform to AWWA C900, Class 150, and to ASTM F 1483 and shall have an outside diameter equal to cast iron outside diameter.

2.2 FITTINGS AND SPECIALS

2.2.1 PVC Pipe System

a. For pipe 100 mm diameter and larger, fittings and specials shall be iron, bell end in accordance with AWWA ANSI/AWWA C110/A21.10, 1.03 MPa pressure rating unless otherwise shown or specified, except that profile of bell may have special dimensions as required by the pipe manufacturer; or fittings and specials may be of the same material as the pipe with elastomeric gaskets, all in conformance with AWWA C900. Iron fittings and specials shall be cement-mortar lined (standard thickness) in accordance with AWWA ANSI/AWWA C104/A21.4. Fittings shall be bell and spigot or plain end pipe, or as applicable. Ductile iron compact fittings shall be in accordance with AWWA ANSI/AWWA C153/A21.53.

2.3 JOINTS

2.3.1 Plastic Pipe Jointing

2.3.1.1 PE Pipe

Joints for pipe fittings and couplings shall be strong tight joints as specified for PE in Paragraph INSTALLATION. Joints connecting pipe of differing materials shall be made in accordance with the manufacturer's recommendation, and as approved by the Contracting Officer.

2.3.1.2 PVC Pipe

Joints, fittings, and couplings shall be as specified for PVC pipe. Joints connecting pipe of differing materials shall be made in accordance with the manufacturer's recommendations, and as approved by the Contracting Officer.

2.3.1.3 PVCO Pipe

Joints shall conform to ASTM D 3139. Elastomeric gaskets shall conform to ASTM F 477.

2.4 VALVES

2.4.1 Gate Valves

Gate valves shall be designed for a working pressure of not less than 1.03 MPa. Valve connections shall be as required for the piping in which they are installed. Valves shall have a clear waterway equal to the full nominal diameter of the valve, and shall be opened by turning counterclockwise. The operating nut or wheel shall have an arrow, cast in the metal, indicating the direction of opening.

a. Valves 80 mm and larger shall be iron body, bronze mounted, and shall conform to AWWA C500. Flanges shall not be buried. An approved pit shall be provided for all flanged connections.

2.4.2 Indicator Post for Valves

Each valve shown on the drawings with the designation "P.I.V." shall be equipped with indicator post conforming to the requirements of NFPA 24. Operation shall be by a wrench which shall be attached to each post.

2.5 VALVE BOXES

Valve boxes shall be cast iron or concrete, except that concrete boxes may be installed only in locations not subjected to vehicular traffic. Cast-iron boxes shall be extension type with slide-type adjustment and with flared base. The minimum thickness of metal shall be 5 mm. Concrete boxes shall be the standard product of a manufacturer of precast concrete equipment. The word "WATER" shall be cast in the cover. The box length shall adapt, without full extension, to the depth of cover required over the pipe at the valve location.

2.6 FIRE HYDRANTS

Hydrants shall be dry-barrel type conforming to AWWA ANSI/AWWA C502 with valve opening at least 125 mm in diameter and designed so that the flange at the main valve seat can be removed with the main valve seat apparatus remaining intact, closed and reasonably tight against leakage and with a breakable valve rod coupling and breakable flange connections located no more than 200 mm above the ground grade. Hydrants shall have a 150 mm bell connection, two 65 mm hose connections and one 115 mm pumper connection. Outlets shall have American National Standard fire-hose coupling threads. Working parts shall be bronze. Design, material, and workmanship shall be equal to the latest stock pattern ordinarily produced by the manufacturer. Hydrants shall be painted with 1 coat of red iron oxide, zinc oxide primer conforming to SSPC Paint 25 and 2 finish coats of silicone alkyd paint conforming to SSPC Paint 21, as shown on drawings. Suitable bronze adapter for each outlet, with caps, shall be furnished.

2.7 MISCELLANEOUS ITEMS

2.7.1 Service Clamps

Service clamps shall have a pressure rating not less than that of the pipe to be connected and shall be either the single or double flattened strap type. Clamps shall have a galvanized malleable-iron body with cadmium plated straps and nuts. Clamps shall have a rubber gasket cemented to the body.

2.7.2 Corporation Stops

Corporation stops shall have standard corporation stop thread conforming to AWWA C800 on the inlet end, with flanged joints, compression pattern flared tube couplings, or wiped joints for connections to goosenecks.

2.7.3 Goosenecks

Copper tubing for gooseneck connections shall conform to the applicable requirements of ASTM B 88, Type K, annealed. Length of cable requirement connections shall be in accordance with standard practice.

2.7.4 Service Stops

Service stops shall be water-works inverted-ground-key type, oval or round flow way, tee handle, without drain. Pipe connections shall be suitable for the type of service pipe used. All parts shall be of bronze with female iron-pipe-size connections or compression-pattern flared tube couplings, and shall be designed for a hydrostatic test pressure not less than 1.375 MPa .

2.7.5 Tapping Sleeves

Tapping sleeves of the sizes indicated for connection to existing main shall be the cast gray, ductile, or malleable iron, split-sleeve type with flanged or grooved outlet, and with bolts, follower rings and gaskets on each end of the sleeve. Construction shall be suitable for a maximum working pressure of 1.03 MPa. Bolts shall have square heads and hexagonal nuts. Longitudinal gaskets and mechanical joints with gaskets shall be as recommended by the manufacturer of the sleeve. When using grooved

mechanical tee, it shall consist of an upper housing with full locating collar for rigid positioning which engages a machine-cut hole in pipe, encasing an elastomeric gasket which conforms to the pipe outside diameter around the hole and a lower housing with positioning lugs, secured together during assembly by nuts and bolts as specified, pretorqued to 67.8 Newton meters.

2.7.6 Service Boxes

Service boxes shall be cast iron or concrete and shall be extension service boxes of the length required for the depth of the line, with either screw or slide-type adjustment. The boxes shall have housings of sufficient size to completely cover the service stop or valve and shall be complete with identifying covers.

2.7.7 Disinfection

Chlorinating materials shall conform to the following:

Chlorine, Liquid: AWWA B301.

Hypochlorite, Calcium and Sodium: AWWA B300.

2.7.8 Meters

Meters shall be the type and size shown on the drawings or specified. Meters of each of the various types furnished and installed shall be supplied by one manufacturer.

2.9.8.1 Displacement Type

Displacement type meters shall conform to AWWA ANSI/AWWA C700. Registers shall be straight-reading and shall read in cubic meters . Meters in sizes 13 through 25 mm shall be frost-protection design. Connections shall be suitable to the type of pipe and conditions encountered. Register type shall be a direct reading remote register designed in accordance with AWWA C706. Meters shall comply with the accuracy and capacity requirements of AWWA ANSI/AWWA C700.

2.7.9 Meter Boxes

Meter boxes shall be of cast iron, concrete, or plastic. The boxes shall be of sufficient size to completely enclose the meter and shutoff valve or service stop. Meter boxes set in paved areas subject to vehicular traffic shall be cast iron, or concrete with cast iron lid and cast iron meter reader lid. Boxes set in sidewalks, not subject to vehicular traffic, shall use concrete covers with cast iron meter reader lids. Plastic boxes and lids shall not be used in unpaved areas or grass areas not subject to vehicular traffic. Box height shall extend from invert of the meter to final grade at the meter location. The lid shall have the word "WATER" cast in it.

PART 3 EXECUTION

3.1 INSTALLATION

3.1.1 Cutting of Pipe

Cutting of pipe shall be done in a neat and workmanlike manner without damage to the pipe. Unless otherwise recommended by the manufacturer and authorized by the Contracting Officer, cutting shall be done with an approved type mechanical cutter. Wheel cutter shall be used when practicable. Copper tubing shall be cut square and all burrs shall be removed. Squeeze type mechanical cutters shall not be used for ductile iron.

3.1.2 Adjacent Facilities

3.1.2.1 Sewer Lines

Where the location of the water pipe is not clearly defined in dimensions on the drawings, the water pipe shall not be laid closer horizontally than 3 m from a sewer except where the bottom of the water pipe will be at least 300 mm above the top of the sewer pipe, in which case the water pipe shall not be laid closer horizontally than 1.8 m from the sewer. Where water lines cross under gravity-flow sewer lines, the sewer pipe, for a distance of at least 3 m each side of the crossing, shall be fully encased in concrete or shall be made of pressure pipe with no joint located within 900 mm horizontally of the crossing. Water lines shall in all cases cross above sewage force mains or inverted siphons and shall be not less than 600 mm above the sewer main. Joints in the sewer main, closer horizontally than 900 mm to the crossing, shall be encased in concrete.

3.1.2.2 Water Lines

Water lines shall not be laid in the same trench with sewer lines, gas lines, fuel lines, or electric wiring.

3.1.2.3 Copper Tubing Lines

Copper tubing shall not be installed in the same trench with ferrous piping materials.

3.1.2.4 Nonferrous Metallic Pipe

Where nonferrous metallic pipe, e.g. copper tubing, crosses any ferrous piping material, a minimum vertical separation of 300 mm shall be maintained between pipes.

3.1.2.5 Structures

Where water pipe is required to be installed within 1 m of existing structures, the water pipe shall be sleeved as required in Paragraph "Casing Pipe". The Contractor shall install the water pipe and sleeve ensuring that there will be no damage to the structures and no settlement or movement of foundations or footings.

3.1.3 Joint Deflection

3.1.3.1 Offset for Flexible Plastic Pipe

Maximum offset in alignment between adjacent pipe joints shall be as recommended by the manufacturer and approved by the Contracting Officer, but shall not exceed 5 degrees.

3.1.4 Placing and Laying

Pipe and accessories shall be carefully lowered into the trench by means of derrick, ropes, belt slings, or other authorized equipment. Water-line materials shall not be dropped or dumped into the trench. Abrasion of the pipe coating shall be avoided. Except where necessary in making connections with other lines or as authorized by the Contracting Officer, pipe shall be laid with the bells facing in the direction of laying. The full length of each section of pipe shall rest solidly upon the pipe bed, with recesses excavated to accommodate bells, couplings, and joints. Pipe that has the grade or joint disturbed after laying shall be taken up and relaid. Pipe shall not be laid in water or when trench conditions are unsuitable for the work. Water shall be kept out of the trench until joints are complete. When work is not in progress, open ends of pipe, fittings, and valves shall be securely closed so that no trench water, earth, or other substance will enter the pipes or fittings. Where any part of the coating or lining is damaged, the repair shall be made by and at the Contractor's expense in a satisfactory manner. Pipe ends left for future connections shall be valved, plugged, or capped, and anchored, as shown.

3.1.4.1 Plastic Pipe Installation

PE Pipe shall be installed in accordance with ASTM D 2774. PVC pipe shall be installed in accordance with AWWA M23.

3.1.4.2 Piping Connections

Where connections are made between new work and existing mains, the connections shall be made by using specials and fittings to suit the actual conditions. When made under pressure, these connections shall be installed using standard methods as approved by the Contracting Officer. Connections to existing asbestos-cement pipe shall be made in accordance with ACPPA-01.

3.1.4.3 Penetrations

Pipe passing through walls of valve pits and structures shall be provided with ductile-iron or Schedule 40 steel wall sleeves. Annular space between walls and sleeves shall be filled with rich cement mortar. Annular space between pipe and sleeves shall be filled with mastic.

3.1.5 Jointing

3.1.5.1 PE Pipe Requirements

Jointing shall comply with ASTM D 2657, Technique I-Socket Fusion or Technique II-Butt Fusion.

3.1.5.2 PVC Plastic Pipe Requirements

a. Pipe 100 through 300 mm diameter: Joints shall be elastomeric gasket as specified in AWWA C900. Jointing procedure shall be as specified for pipe less than 100 mm diameter with configuration using elastomeric ring gasket.

3.1.6 Installation of Service Lines

Service lines shall include the pipeline connecting building piping to water distribution lines to the connections with the building service at a point approximately 1.5 m outside the building where such building service exists. Where building services are not installed, the Contractor shall terminate the service lines approximately 1.5 m from the site of the proposed building at a point designated by the Contracting Officer. Such service lines shall be closed with plugs or caps. All service stops and valves shall be provided with service boxes. Service lines shall be constructed in accordance with the following requirements:

3.1.6.1 Service Lines Larger than 50 mm

Service lines larger than 50 mm (2 inches) shall be connected to the main by a tapped saddle, tapping sleeve and valve, service clamp or reducing tee, depending on the main diameter and the service line diameter, and shall have a gate valve. Lines 80 mm (3 inches) and larger may use rubber-seated butterfly valves as specified above, or gate valves.

3.1.6.2 Service Lines for Sprinkler Supplies

Water service lines used to supply building sprinkler systems for fire protection shall be connected to the water distribution main in accordance with NFPA 24.

3.1.7 Setting of Fire Hydrants, Meters, Valves and Valve Boxes

3.1.7.1 Location of Fire Hydrants

Fire hydrants shall be located and installed as shown. Each hydrant shall be connected to the main with a 150 mm branch line having at least as much cover as the distribution main. Hydrants shall be set plumb with pumper nozzle facing the roadway, with the center of the lowest outlet not less than 450 mm above the finished surrounding grade, and the operating nut not more than 1.2 m above the finished surrounding grade. Fire hydrants designated on the drawings as low profile shall have the lowest outlet not less than 450 mm above the finished surrounding grade, the top of the hydrant not more than 600 mm above the finished surrounding grade. Except where approved otherwise, the backfill around hydrants shall be thoroughly compacted to the finished grade immediately after installation to obtain beneficial use of the hydrant as soon as practicable. The hydrant shall be set upon a slab of concrete not less than 100 mm thick and 400 mm square. Not less than 2 cubic meters of free-draining broken stone or gravel shall be placed around and beneath the waste opening of dry barrel hydrants to ensure drainage.

3.1.7.2 Location of Meters

Meters and meter boxes shall be installed at the locations shown on the drawings. The meters shall be centered in the boxes to allow for reading and ease of removal or maintenance.

3.1.7.3 Location of Valves

After delivery, valves, including those in hydrants, shall be drained to prevent freezing and shall have the interiors cleaned of all foreign matter before installation. Stuffing boxes shall be tightened and hydrants and valves shall be fully opened and fully closed to ensure that all parts are in working condition. Check, pressure reducing, vacuum, and air relief valves shall be installed in valve pits. Valves and valve boxes shall be installed where shown or specified, and shall be set plumb. Valve boxes shall be centered on the valves. Boxes shall be installed over each outside gate valve unless otherwise shown. Where feasible, valves shall be located outside the area of roads and streets. Earth fill shall be tamped around each valve box or pit to a distance of 1.2 m on all sides of the box, or the undisturbed trench face if less than 1.2 m.

3.1.7.4 Location of Service Boxes

Where water lines are located below paved streets having curbs, the boxes shall be installed directly back of the curbs. Where no curbing exists, service boxes shall be installed in accessible locations, beyond the limits of street surfacing, walks and driveways.

3.1.8 Tapped Tees and Crosses

Tapped tees and crosses for future connections shall be installed where shown.

3.1.9 Thrust Restraint

Plugs, caps, tees and bends deflecting 11.25 degrees or more, either vertically or horizontally, on waterlines 100 mm in diameter or larger, and fire hydrants shall be provided with thrust restraints. Valves shall be securely anchored or shall be provided with thrust restraints to prevent movement.

3.1.9.1 Thrust Blocks

Thrust blocking shall be concrete of a mix not leaner than: 1 cement, 2-1/2 sand, 5 gravel; and having a compressive strength of not less than 14 MPa after 28 days. Blocking shall be placed between solid ground and the hydrant or fitting to be anchored. Unless otherwise indicated or directed, the base and thrust bearing sides of thrust blocks shall be poured directly against undisturbed earth. The sides of thrust blocks not subject to thrust may be poured against forms. The area of bearing shall be as shown or as directed. Blocking shall be placed so that the fitting joints will be accessible for repair. Steel rods and clamps, protected by galvanizing or by coating with bituminous paint, shall be used to anchor vertical down bends into gravity thrust blocks.

3.2 HYDROSTATIC TESTS

Where any section of a water line is provided with concrete thrust blocking for fittings or hydrants, the hydrostatic tests shall not be made until at least 5 days after installation of the concrete thrust blocking, unless otherwise approved.

3.2.1 Pressure Test

After the pipe is laid, the joints completed, fire hydrants permanently installed, and the trench partially backfilled leaving the joints exposed for examination, the newly laid piping or any valved section of piping shall, unless otherwise specified, be subjected for 1 hour to a hydrostatic pressure test of 1.38 MPa. Water supply lines designated on the drawings shall be subjected for 1 hour to a hydrostatic pressure test of 1.38 MPa. Each valve shall be opened and closed several times during the test. Exposed pipe, joints, fittings, hydrants, and valves shall be carefully examined during the partially open trench test. Joints showing visible leakage shall be replaced or remade as necessary. Cracked or defective pipe, joints, fittings, hydrants and valves discovered in consequence of this pressure test shall be removed and replaced with sound material, and the test shall be repeated until the test results are satisfactory. The requirement for the joints to remain exposed for the hydrostatic tests may be waived by the Contracting Officer when one or more of the following conditions is encountered:

a. Wet or unstable soil conditions in the trench.

b. Compliance would require maintaining barricades and walkways around and across an open trench in a heavily used area that would require continuous surveillance to assure safe conditions.

c. Maintaining the trench in an open condition would delay completion of the project.

The Contractor may request a waiver, setting forth in writing the reasons for the request and stating the alternative procedure proposed to comply with the required hydrostatic tests. Backfill placed prior to the tests shall be placed in accordance with the requirements of Section 02316EXCAVATION, TRENCHING, AND BACKFILLING FOR UTILITIES SYSTEMS.

3.2.2 Leakage Test

Leakage test shall be conducted after the pressure tests have been satisfactorily completed. The duration of each leakage test shall be at least 2 hours, and during the test the water line shall be subjected to not less than 1.38 MPa pressure. Water supply lines designated on the drawings shall be subjected to a pressure equal to 1.38 MPa. Leakage is defined as the quantity of water to be supplied into the newly laid pipe, or any valved or approved section, necessary to maintain pressure within 34.5 kPa of the specified leakage test pressure after the pipe has been filled with water and the air expelled. Piping installation will not be accepted if leakage exceeds the allowable leakage which is determined by the following formula:

L = 0.0001351ND(P raised to 0.5 power)

L = Allowable leakage in gallons per hour
N = Number of joints in the length of pipeline tested
D = Nominal diameter of the pipe in inches
P = Average test pressure during the leakage test, in psi gauge

Should any test of pipe disclose leakage greater than that calculated by the above formula, the defective joints shall be located and repaired until the leakage is within the specified allowance, without additional cost to the Government.

3.2.3 Time for Making Test

Except for joint material setting or where concrete thrust blocks necessitate a 5-day delay, pipelines jointed with rubber gaskets, mechanical or push-on joints, or couplings may be subjected to hydrostatic pressure, inspected, and tested for leakage at any time after partial completion of backfill. Cement-mortar lined pipe may be filled with water as recommended by the manufacturer before being subjected to the pressure test and subsequent leakage test.

3.2.4 Concurrent Hydrostatic Tests

The Contractor may elect to conduct the hydrostatic tests using either or both of the following procedures. Regardless of the sequence of tests employed, the results of pressure tests, leakage tests, and disinfection shall be as specified. Replacement, repair or retesting required shall be accomplished by the Contractor at no additional cost to the Government.

a. Pressure test and leakage test may be conducted concurrently.

b. Hydrostatic tests and disinfection may be conducted concurrently, using the water treated for disinfection to accomplish the hydrostatic tests. If water is lost when treated for disinfection and air is admitted to the unit being tested, or if any repair procedure results in contamination of the unit, disinfection shall be reaccomplished.

3.3 DISINFECTION

3.3.1 Bacteriological Disinfection

Before acceptance of potable water operation, each unit of completed waterline shall be disinfected as specified. After pressure tests have been made, the unit to be disinfected shall be thoroughly flushed with water until all entrained dirt and mud have been removed before introducing the chlorinating material. The chlorinating material shall be either liquid chlorine, calcium hypochlorite, or sodium hypochlorite, conforming to paragraph MISCELLANEOUS ITEMS. The chlorinating material shall provide a dosage of not less than 50 ppm and shall be introduced into the water lines in an approved manner. Polyvinyl Chloride (PVC) pipe lines shall be chlorinated using only the above specified chlorinating material in solution. The agent shall not be introduced into the line in a dry solid state. The treated water shall be retained in the pipe long enough to destroy all non-spore forming bacteria. Except where a shorter period is approved, the retention time shall be at least 24 hours and shall produce not less than 25 ppm of free chlorine residual throughout the line at the end of the retention period. Valves on the lines being disinfected shall be opened and closed several times during the contact period. The line shall then be flushed with clean water until the residual chlorine is reduced to less than 1.0 ppm. During the flushing period, each fire hydrant on the line shall be opened and closed several times. From several points in the unit, the Contracting Officer will take samples of water in proper sterilized containers for bacterial examination. The disinfection shall be repeated until tests

indicate the absence of pollution for at least 2 full days. The unit will not be accepted until satisfactory bacteriological results have been obtained.

3.3.2 Lead Residual

Following the bacteriological disinfection and testing, the system shall be flushed with a sufficient velocity of water and sufficient tests performed at each hot and cold water discharge point until no more than 15 ppb lead residuals remain in the system. All tests and samples shall be performed in accordance with state and, if applicable, Federal regulations. Samples for testing are to be collected after a 6 hour continuous period of no flushing, and will be considered first draw samples. The commercial laboratory shall be certified by the state's approving authority for examination of potable water. Lead residual test results shall be submitted to the Contracting Officer. The system will not be accepted until satisfactory bacteriological results and lead residual test results have been obtained. All flushing and testing for lead residuals, including all costs, are the responsibility of the Contractor.

3.4 CLEANUP

Upon completion of the installation of water lines, and appurtenances, all debris and surplus materials resulting from the work shall be removed.

END OF SECTION

This page intentionally blank

SECTION 02531

SANITARY SEWERS

PART 1 GENERAL

1.1 REFERENCES

The publications listed below form a part of this specification to the extent referenced. The publications are referred to in the text by basic designation only.

AMERICAN RAILWAY ENGINEERING ASSOCIATION (AREA)

AREA-01	(1996) 1996-1997 Manual for Railway Engineering (Fixed Properties) 4 Vol.

AMERICAN SOCIETY FOR TESTING AND MATERIALS (ASTM)

ASTM A 123	(1989a) Zinc (Hot-Dip Galvanized) Coatings on Iron and Steel Products
ASTM C 94	(1996) Ready-Mixed Concrete
ASTM C 150	(1997) Portland Cement
ASTM D 1784	(1996) Rigid Poly(Vinyl Chloride) (PVC) Compounds and Chlorinated Poly(Vinyl Chloride) (CPVC) Compounds
ASTM D 2680	(1995a) Acrylonitrile-Butadiene-Styrene (ABS) and Poly(Vinyl Chloride) (PVC) Composite Sewer Piping
ASTM D 2751	(1996) Acrylonitrile-Butadiene-Styrene (ABS) Sewer Pipe and Fittings
ASTM D 3034	(1994) Type PSM Poly(Vinyl Chloride) (PVC) Sewer Pipe and Fittings
ASTM D 3212	(1996a) Joints for Drain and Sewer Plastic Pipes Using Flexible Elastomeric Seals
ASTM F 402	(1993) Safe Handling of Solvent Cements, Primers, and Cleaners Used for Joining Thermoplastic Pipe and Fittings
ASTM F 794	(1995a) Poly(Vinyl Chloride) (PVC) Profile Gravity Sewer Pipe and Fittings Based on Controlled Inside Diameter

ASTM F 949	(1994) Poly(Vinyl Chloride) (PVC) Corrugated Sewer Pipe with a Smooth Interior and Fittings

NATIONAL FIRE PROTECTION ASSOCIATION (NFPA)

NFPA 49	(1994) Hazardous Chemicals Data
NFPA 325-1	(1994) Fire Hazard Properties of Flammable Liquids, Gases, and Volatile Solids
NFPA 704	(1996) Identification of the Fire Hazards of Materials for Emergency Response

UNI-BELL PVC PIPE ASSOCIATION (UBPPA)

UBPPA UNI-B-6	(1990) Recommended Practice for the Low-Pressure Air Testing of Installed Sewer Pipe
UBPPA UNI-B-9	(1990; Addenda 1994) Recommended Performance Specification for Polyvinyl Chloride (PVC) Profile Wall Gravity Sewer Pipe and Fittings Based on Controlled Inside Diameter (Nominal Pipe Sizes 4-48 inch)

1.2 GENERAL REQUIREMENTS

The construction required herein shall include appurtenant structures and building sewers to points of connection with the building drains 1.5 m outside the building to which the sewer system is to be connected. The Contractor shall replace damaged material and redo unacceptable work at no additional cost to the Government. Excavation and backfilling is specified in Section 02316 EXCAVATION, TRENCHING, AND BACKFILLING FOR UTILITIES SYSTEMS. Backfilling shall be accomplished after inspection by the Contracting Officer. Before, during, and after installation, plastic pipe and fittings shall be protected from any environment that would result in damage or deterioration to the material. The Contractor shall have a copy of the manufacturer's instructions available at the construction site at all times and shall follow these instructions unless directed otherwise by the Contracting Officer. Solvents, solvent compounds, lubricants, elastomeric gaskets, and any similar materials required to install the plastic pipe shall be stored in accordance with the manufacturer's recommendation and shall be discarded if the storage period exceeds the recommended shelf life. Solvents in use shall be discarded when the recommended pot life is exceeded.

1.3 SUBMITTALS

Government approval is required for submittals with a "GA" designation; submittals having an "FIO" designation are for information only. The following shall be submitted in accordance with Section 01330 SUBMITTAL PROCEDURES:

SD-13 Certificates

Portland Cement; FIO.

Certificates of compliance stating the type of cement used in manufacture of concrete pipe, fittings and precast manholes.

PART 2 PRODUCTS

2.1 PIPE

Pipe shall conform to the respective specifications and other requirements specified below.

2.1.1 Plastic Pipe

Acrylonitrile-butadiene-styrene (ABS) and polyvinyl chloride (PVC) composite sewer piping shall conform to ASTM D 2680. Size 200 mm through 380 mm diameter.

2.1.1.1 ABS Pipe

ASTM D 2751.

2.1.1.2 PVC Pipe

ASTM D 3034, Type PSM with a maximum SDR of 35, Size 380 mm or less in diameter. ASTM F 949 for corrugated sewer pipes with a smooth interior. UBPPA UNI-B-9 and ASTM F 794, Series 46, for ribbed sewer pipe with smooth interior, size 200 mm through 1200 mm diameters. PVC shall be certified by the compounder as meeting the requirements of ASTM D 1784, cell Class 12454B. The pipe stiffness shall be greater than or equal to 735/D for cohesionless material pipe trench backfills.

2.2 REQUIREMENTS FOR FITTINGS

Fittings shall be compatible with the pipe supplied and shall have a strength not less than that of the pipe. Fittings shall conform to the respective specifications and other requirements specified below.

2.2.1 Fittings for Plastic Pipe

ABS and PVC composite sewer pipe fittings shall conform to ASTM D 2680.

2.2.1.1 Fittings for ABS Pipe

ASTM D 2751.

2.2.1.2 Fittings for PVC Pipe

ASTM D 3034 for type PSM pipe. ASTM F 949 for corrugated sewer pipe with a smooth interior. UBPPA UNI-B-9 and ASTM F 794, Series 46, for ribbed sewer pipe with smooth interior.

2.3 JOINTS

Joints installation shall comply with the manufacturer's instructions.

2.3.1 Plastic Pipe Jointing

Flexible plastic pipe (PVC or high density polyethylene pipe) gasketed joints shall conform to ASTM D 3212.

2.3.1.1 ABS Pipe Jointing

ASTM D 2751, solvent weld or bell and spigot O-ring joint, size 300 mm (12 inches) or less in diameter, dimensions and tolerances in accordance with Table 2 of ASTM D 2751.

2.4 BRANCH CONNECTIONS

Branch connections shall be made by use of regular fittings or solvent cemented saddles as approved. Saddles for ABS and PVC composite pipe shall conform to Figure 2 of ASTM D 2680; saddles for ABS pipe shall comply with Table 3 of ASTM D 2751; and saddles for PVC pipe shall conform to Table 4 of ASTM D 3034.

2.5 FRAMES AND COVERS

Frames and covers shall be cast iron, ductile iron or reinforced concrete. Cast iron frames and covers shall be as indicated or shall be of type suitable for the application, circular, without vent holes. The frames and covers shall have a combined weight of not less than 181.4 kg. Reinforced concrete frames and covers shall be as indicated or shall conform to ASTM C 478 or ASTM C 478M. The word "Sewer" shall be stamped or cast into covers so that it is plainly visible.

2.6 STEEL LADDER

A steel ladder shall be provided where the depth of a manhole exceeds 3.6 m. The ladder shall not be less than 406 mm in width, with 19 mm diameter rungs spaced 305 mm apart. The two stringers shall be a minimum 10 mm thick and 51 mm wide. Ladders and inserts shall be galvanized after fabrication in conformance with ASTM A 123.

2.7 CEMENT MORTAR

Cement mortar shall conform to ASTM C 270, Type M with Type II cement.

2.7.1 Portland Cement

Portland cement shall conform to ASTM C 150, Type II for concrete used in concrete pipe, concrete pipe fittings, and manholes and type optional with the Contractor for cement used in concrete cradle, concrete encasement, and thrust blocking.

2.7.2 Portland Cement Concrete

Portland cement concrete shall conform to ASTM C 94, compressive strength of 28 MPa at 28 days, except for concrete cradle and encasement or concrete blocks for manholes. Concrete used for cradle

and encasement shall have a compressive strength of 17 MPa minimum at 28 days. Concrete in place shall be protected from freezing and moisture loss for 7 days.

2.8 STRUCTURES

2.8.1 Precast Reinforced Concrete Manhole Sections

Precast reinforced concrete manhole sections shall conform to ASTM C 478, except that portland cement shall be as specified herein. Joints shall be cement mortar, an approved mastic, rubber gaskets, a combination of these types; or the use of external preformed rubber joint seals and extruded rolls of rubber with mastic adhesive on one side.

PART 3 EXECUTION

3.1 INSTALLATION

3.1.1 Adjacent Facilities

3.1.1.1 Water Lines

Where the location of the sewer is not clearly defined by dimensions on the drawings, the sewer shall not be closer horizontally than 3 m to a water-supply main or service line, except that where the bottom of the water pipe will be at least 300 mm above the top of the sewer pipe, the horizontal spacing may be a minimum of 2 m. Where gravity-flow sewers cross above water lines, the sewer pipe for a distance of 3 m on each side of the crossing shall be fully encased in concrete or shall be acceptable pressure pipe with no joint closer horizontally than 1 m to the crossing. The thickness of the concrete encasement including that at the pipe joints shall be not less than 100 mm.

3.1.1.2 Structural Foundations

Where sewer pipe is to be installed within 1 m of an existing or proposed building or structural foundation such as a retaining wall, control tower footing, water tank footing, or any similar structure, the sewer pipe shall be sleeved as specified above. Contractor shall ensure there is no damage to these structures, and no settlement or movement of foundations or footing.

3.1.2 Pipe Laying

a. Pipe shall be protected during handling against impact shocks and free fall; the pipe interior shall be free of extraneous material.

b. Pipe laying shall proceed upgrade with the spigot ends of bell-and-spigot pipe and tongue ends of tongue-and-groove pipe pointing in the direction of the flow. Each pipe shall be laid accurately to the line and grade shown on the drawings. Pipe shall be laid and centered so that the sewer has a uniform invert. As the work progresses, the interior of the sewer shall be cleared of all superfluous materials.

c. Before making pipe joints, all surfaces of the portions of the pipe to be joined shall be clean and dry. Lubricants, primers, and adhesives shall be used as recommended by the pipe

manufacturer. The joints shall then be placed, fitted, joined, and adjusted to obtain the degree of water tightness required.

d. ABS composite pipe ends with exposed truss and filler material shall be coated with solvent weld material before making the joint to prevent water or air passage at the joint between the inner and outer wall of the pipe.

e. Installations of solvent weld joint pipe, using ABS or PVC pipe and fittings shall be in accordance with ASTM F 402. The Contractor shall ensure adequate trench ventilation and protection for workers installing the pipe.

3.1.2.1 Trenches

Trenches shall be kept free of water and as dry as possible during bedding, laying, and jointing and for as long a period as required. When work is not in progress, open ends of pipe and fittings shall be satisfactorily closed so that no trench water or other material will enter the pipe or fittings.

3.1.2.2 Backfill

As soon as possible after the joint is made, sufficient backfill material shall be placed along the pipe to prevent pipe movement off line or grade. Plastic pipe shall be completely covered to prevent damage from ultraviolet light.

3.1.2.3 Width of Trench

If the maximum width of the trench at the top of the pipe, as specified in Section 02316 EXCAVATION, TRENCHING, AND BACKFILLING FOR UTILITIES SYSTEMS, is exceeded for any reason other than by direction, the Contractor shall install, at no additional cost to the Government, concrete cradling, pipe encasement, or other bedding required to support the added load of the backfill.

3.1.2.4 Jointing

Joints between different pipe materials shall be made as specified, using approved jointing materials.

3.1.2.5 Handling and Storage

Pipe, fittings and joint material shall be handled and stored in accordance with the manufacturer's recommendations. Storage facilities for plastic pipe, fittings, joint materials and solvents shall be classified and marked in accordance with NFPA 704, with classification as indicated in NFPA 49 and NFPA 325-1.

3.1.3 Leakage Tests

Lines shall be tested for leakage by low pressure air testing, infiltration tests or exfiltration tests, as appropriate. Low pressure air testing for vitrified clay pipes shall be as prescribed in ASTM C 828. Low pressure air testing for concrete pipes shall be as prescribed in ASTM C 828. Low pressure air testing for PVC pipe shall be as prescribed in UBPPA UNI-B-6. Low pressure air testing procedures for other pipe materials shall use the pressures and testing times prescribed in ASTM C 828 and ASTM

C 924, after consultation with the pipe manufacturer. Prior to infiltration or exfiltration tests, the trench shall be backfilled up to at least the lower half of the pipe. If required, sufficient additional backfill shall be placed to prevent pipe movement during testing, leaving the joints uncovered to permit inspection. Visible leaks encountered shall be corrected regardless of leakage test results. When the water table is 600 mm or more above the top of the pipe at the upper end of the pipeline section to be tested, infiltration shall be measured using a suitable weir or other device acceptable to the Contracting Officer. When the Contracting Officer determines that infiltration cannot be properly tested, an exfiltration test shall be made by filling the line to be tested with water so that a head of at least 600 mm is provided above both the water table and the top of the pipe at the upper end of the pipeline to be tested. The filled line shall be allowed to stand until the pipe has reached its maximum absorption, but not less than 4 hours. After absorption, the head shall be re-established. The amount of water required to maintain this water level during a 2-hour test period shall be measured. Leakage as measured by either the infiltration test or exfiltration test shall not exceed 600 L per 10 mm diameter per km of pipeline per day. When leakage exceeds the maximum amount specified, satisfactory correction shall be made and retesting accomplished. Testing, correction, and retesting shall be made at no additional cost to the Government.

3.1.4 Test for Deflection

When flexible pipe is used, a deflection test shall be made on the entire length of the installed pipeline not less than 30 days after the completion of all work including the leakage test, backfill, and placement of any fill, grading, paving, concrete, or superimposed loads. Deflection shall be determined by use of a deflection device or by use of a spherical, spheroidal, or elliptical ball, a cylinder, or circular sections fused to a common shaft. The ball, cylinder, or circular sections shall have a diameter, or minor diameter as applicable, of 92.5 percent of the inside diameter of the pipe. A tolerance of plus 0.5 percent will be permitted. The ball, cylinder, or circular sections shall be of a homogeneous material throughout, shall have a density greater than 1.0 as related to water at 4.0 degrees C, and shall have a surface brinell hardness of not less than 150. The device shall be center bored and through bolted with a 6 mm minimum diameter steel shaft having a yield strength of 480 MPa or more, with eyes at each end for attaching pulling cables. The eye shall be suitably backed with flange or heavy washer; a pull exerted on the opposite end of the shaft shall produce compression throughout the remote end of the ball, cylinder or circular section. Circular sections shall be spaced so that the distance from the external faces of the front and back sections shall equal or exceed the diameter of the circular section. Failure of the ball, cylinder, or circular section to pass freely through a pipe run, either by being pulled through or by being flushed through with water, shall be cause for rejection of that run. When a deflection device is used for the test in lieu of the ball, cylinder, or circular sections described, such device shall be approved prior to use. The device shall be sensitive to 1.0 percent of the diameter of the pipe being measured and shall be accurate to 1.0 percent of the indicated dimension. Installed pipe showing deflections greater than 7.5 percent of the normal diameter of the pipe, or 5 percent for RTRP and RPMP, shall be retested by a run from the opposite direction. If the retest also fails, the suspect pipe shall be replaced at no cost to the Government.

3.2 CONCRETE CRADLE AND ENCASEMENT

The pipe shall be supported on a concrete cradle, or encased in concrete where indicated or directed.

3.3 INSTALLATION OF WYE BRANCHES

Wye branches shall be installed where sewer connections are indicated or where directed. Cutting into piping for connections shall not be done except in special approved cases. When the connecting pipe cannot be adequately supported on undisturbed earth or tamped backfill, the pipe shall be encased in concrete backfill or supported on a concrete cradle as directed. Concrete required because of conditions resulting from faulty construction methods or negligence by the Contractor shall be installed at no additional cost to the Government. The installation of wye branches in an existing sewer shall be made by a method which does not damage the integrity of the existing sewer. One acceptable method consists of removing one pipe section, breaking off the upper half of the bell of the next lower section and half of the running bell of wye section. After placing the new section, it shall be rotated so that the broken half of the bell will be at the bottom. The two joints shall then be made with joint packing and cement mortar.

3.4 MANHOLE DETAILS

3.4.1 General Requirements

Manholes shall be constructed of glass-fiber-reinforced polyester, prefabricated plastic, concrete, or precast concrete manhole sections. The invert channels shall be smooth and semicircular in shape conforming to the inside of the adjacent sewer section. Changes in direction of flow shall be made with a smooth curve of as large a radius as the size of the manhole will permit. Changes in size and grade of the channels shall be made gradually and evenly. The invert channels shall be formed directly in the concrete of the manhole base, or shall be built up with brick and mortar, or shall be half tile laid in concrete, or shall be constructed by laying full section sewer pipe through the manhole and breaking out the top half after the surrounding concrete has hardened. Pipe connections shall be made to manhole using water stops, standard O-ring joints, special manhole coupling, or shall be made in accordance with the manufacturer's recommendation. The Contractor's proposed method of connection, list of materials selected, and specials required, shall be approved prior to installation. The floor of the manhole outside the channels shall be smooth and shall slope toward the channels not less than 100 mm per meter nor more than 200 mm per meter. Free drop inside the manholes shall not exceed 500 mm, measured from the invert of the inlet pipe to the top of the floor of the manhole outside the channels; drop manholes shall be constructed whenever the free drop would otherwise be greater than 500 mm.

3.4.2 Steel Ladder Anchorage

Ladder shall be adequately anchored to the wall by means of steel inserts spaced not more than 1850 mm apart vertically, and shall be installed to provide at least 150 mm of space between the wall and the rungs. The wall along the line of the ladder shall be vertical for its entire length.

3.4.3 Jointing, Plastering and Sealing

Mortar joints shall be completely filled and shall be smooth and free from surplus mortar on the inside of the manhole. Mortar and mastic joints between precast rings shall be full-bedded in jointing compound and shall be smoothed to a uniform surface on both the interior and exterior of the manhole. Installation of rubber gasket joints between precast rings shall be in accordance with the recommendations of the manufacturer. Precast rings may also be sealed by the use of extruded rolls of rubber with mastic adhesive on one side.

3.4.4 Setting of Frames and Covers

Unless otherwise indicated, tops of frames and covers shall be set flush with finished grade in paved areas or 50 mm higher than finished grade in unpaved areas. Frame and cover assemblies shall be sealed to manhole sections using external preformed rubber joint seals that meet the requirements of ASTM D 412 and ASTM D 624, or other methods specified in paragraph Jointing, Plastering and Sealing, unless otherwise specified.

3.4.5 External Preformed Rubber Joint Seals

External preformed rubber joint seals and extruded rolls of rubber with mastic adhesive shall meet the requirements of ASTM D 412 and ASTM C 972 to ensure conformance with paragraph Leakage Tests. The seal shall be multi-section with neoprene rubber top section and all lower sections made of Ethylene Propylene Di Monomer (EPDM) rubber with a minimum thickness of 1.5 mm. Each unit shall consist of a top and a bottom section and shall have mastic on the bottom of the bottom section and mastic on the top and bottom of the top section. The mastic shall be non-hardening butyl rubber sealant and shall seal to the cone/top slab of the manhole/catch basin and over the lip of the casting. One unit shall seal a casting and up to six, 50 mm adjusting rings. The bottom section shall be 305 mm in height. A 152 mm high top section will cover up to two, 50 mm adjusting rings. A 305 mm high bottom section will cover up to six, 50 mm adjusting rings. Extension sections shall cover up to two more adjusting rings. Each extension shall overlap the bottom section by 50 mm and shall be overlapped by the top section by 50 mm.

3.5 CONNECTING TO EXISTING MANHOLES

Pipe connections to existing manholes shall be made so that finish work will conform as nearly as practicable to the applicable requirements specified for new manholes, including all necessary concrete work, cutting, and shaping. The connection shall be centered on the manhole. Holes for the new pipe shall be of sufficient diameter to allow packing cement mortar around the entire periphery of the pipe but no larger than 1.5 times the diameter of the pipe. Cutting the manhole shall be done in a manner that will cause the least damage to the walls.

3.6 BUILDING CONNECTIONS

Building connections shall include the lines to and connection with the building waste drainage piping at a point approximately 1.5 m outside the building, unless otherwise indicated. Where building drain piping is not installed, the Contractor shall terminate the building connections approximately 1.5 m from the site of the building at a point and in a manner designated.

3.7 CLEANOUTS AND OTHER APPURTENANCES

Cleanouts and other appurtenances shall be installed where shown on the drawings or as directed by the Contracting Officer, and shall conform to the detail of the drawings.

END OF SECTION

This page intentionally blank

SECTION 02552

PRE-ENGINEERED UNDERGROUND HEAT DISTRIBUTION SYSTEM

PART 1 GENERAL

1.1 REFERENCES

The publications listed below form a part of this specification to the extent referenced. The publications are referred to in the text by basic designation only.

AMERICAN SOCIETY FOR TESTING AND MATERIALS (ASTM)

ASTM A 36/A 36M	(1996) Carbon Structural Steel
ASTM A 53	(1996) Pipe, Steel, Black and Hot-Dipped, Zinc-Coated, Welded and Seamless
ASTM A 106	(1995) Seamless Carbon Steel Pipe for High-Temperature Service
ASTM A 134	(1993) Pipe, Steel, Electric-Fusion (Arc)-Welded (NPS 16 and over)
ASTM A 135	(1996) Electric-Resistance-Welded Steel Pipe
ASTM A 139	(1993a) Electric-Fusion (Arc)-Welded Steel Pipe (NPS 4 and over)
ASTM A 167	(1996) Stainless and Heat-Resisting Chromium-Nickel Steel Plate, Sheet, and Strip
ASTM A 234/A 234M	(1996b) Pipe Fittings of Wrought Carbon Steel and Alloy Steel for Moderate and Elevated Temperatures
ASTM D 2310	(1991) Machine-Made "Fiberglass" (Glass-Fiber-Reinforced Thermosetting-Resin) Pipe
ASTM D 2487	(1993) Classification of Soils for Engineering Purposes (Unified Soil Classification System)
ASTM D 2996	(1995) Filament-Wound "Fiberglass" (Glass-Fiber-Reinforced Thermosetting-Resin) Pipe

AMERICAN SOCIETY OF MECHANICAL ENGINEERS (ASME)

ASME B16.9	(1993) Factory Made Wrought Steel Buttwelding Fittings
ASME B16.11	(1991) Forged Fittings, Socket-Welding and Threaded
ASME B31.1	(1995; B31.1a; B31.1b) Power Piping
ASME B40.1	(1991) Gauges - Pressure Indicating Dial Type - Elastic Element

1.2 DEFINITIONS

The following definitions shall apply to the work.

1.2.1 Pre-engineered System

A complete underground heat distribution system including all required components such as carrier pipes, high temperature hot water supply pipe, high temperature hot water return pipe, and fittings, anchors, pipe supports, insulation, protective casing, and cathodic protection, for the system supplied. The pre-engineered system does not include valve manholes and the piping and equipment inside the valve manholes;. The pre-engineered system shall include all piping and components to a point at least 150 mm inside the building and valve manhole walls. The UHDS shall not use any part of the building or valve manhole structure as an anchor point.

1.2.2 Direct-Buried

A system which is buried, without the need for a field-fabricated protective enclosure such as a concrete trench or tunnel.

1.2.3 UHDS Types

1.2.3.1 Drainable-Dryable-Testable (DDT) Direct-Buried System

A factory-fabricated system including an air and water-tight outer protective casing, air space and an insulated carrier pipe. Drains and vents are provided at the end plates of the system (in manholes or buildings). The drains are normally capped but the caps can be removed to drain water which may leak into the air space if there is a failure in the casing or the carrier pipe. The vents allow water vapor to escape and provide a tell-tale sign of leakage.

1.2.3.2 Water Spread Limiting (WSL) Direct-Buried System

A factory fabricated system including an outer protective casing and an insulated carrier pipe. The system is fabricated in sections which are independent from each other; ground water or condensate which leaks from or into one section cannot travel into the next section. Field-assembly of the sections requires no welding as the sections push together and are sealed with a system of couplings and seals.

1.2.4 UHDS Manufacturer

The UHDS manufacturer is the company responsible for the design and manufacture of the pre-engineered system. The UHDS manufacturer directs the installation of the system and has a representative on the jobsite.

1.2.5 UHDS Manufacturer's Representative

The UHDS manufacturer's representative shall be a person who regularly performs the duties specified is certified in writing by the UHDS manufacturer to be technically qualified and experienced in the installation of the system, and shall be authorized by the manufacturer to make and sign the daily reports specified. The UHDS manufacturer's representative shall be under the direct employ and supervision of the UHDS manufacturer.

1.2.6 Corrosion Engineer

Corrosion engineer refers to a person who by knowledge of the physical sciences and the principles of engineering and mathematics, acquired by professional education and related practical experience, is qualified to engage in the practice of corrosion control. Such person may be a licensed professional corrosion engineer or certified as being qualified by the National Association of Corrosion Engineers (NACE), if such licensing or certification includes 3 years experience in corrosion control on underground metallic surfaces of the type under this contract. NACE certification shall be technologist, corrosion specialist, or cathodic protection specialist. The corrosion engineer shall make at least 3 visits to the project site. The first of these visits shall include obtaining soil resistivity data, acknowledging the type of pipeline coatings to be used and reporting to the Contractor the type of cathodic protection required. Once the submittals are approved and the materials delivered, the corrosion engineer shall revisit the site to ensure the Contractor understands installation practices and laying out the components. The third visit shall involve testing the installed cathodic protection systems and training applicable personnel on proper maintenance techniques. The corrosion engineer shall supervise, inspect, and test the installation and performance of the cathodic protection system.

1.3 WORK DESCRIPTION

1.3.1 Scope

The work shall include the design and fabrication; furnishing; installing, and testing of a direct buried underground insulated heat-distribution system, insulated high temperature hot water supply pipe, insulated high temperature hot water return pipe consisting of piping as indicated, cathodic protection system (where required by this specification), together with fittings and appurtenances necessary for a complete and operable system. Gland type end seals will not be permitted. DDT systems with fiberglass casings shall not be provided.

1.3.2 UHDS Design

The UHDS manufacturer shall be responsible for the complete design of the UHDS, the product to be supplied, fabrication, witnessing installation and testing of the system within the design parameters established by the contract drawings and specifications, and in compliance with the detailed design. The

complete design of the UHDS shall be sealed by a Professional Engineer in the employ of the UHDS manufacturer.

1.3.3 Contract drawings

The contract drawings accompanying this specification provide information on:

a. The size of carrier pipes, approximate length, and site location of the system.

b. The routing and elevation of the piping along the route.

c. Location and design of manholes.

d. The obstacles that must be avoided along the path.

e. Location of piping anchors (anchors will be no closer than 1 m or further than 1.5 m from entrance to manholes or buildings) at manholes and/or buildings. The UHDS manufacturer shall incorporate anchors as needed for the system.

f. Operating pressure and temperature of system.

1.4 SYSTEM REQUIREMENTS

1.4.1 Cathodic Protection

Cathodic protection shall be provided for systems with coated steel casings in accordance with paragraph Cathodic Protection Installation.

1.4.2 Operating Characteristics

The high temperature hot water supply system shall have an operating temperature of 194 degrees C and an operating pressure of 1248 kPa.

1.5 STANDARD PRODUCTS

The designed system and equipment provided for this project shall be of current production and shall essentially duplicate systems that have been in satisfactory use for at least 5 years prior to bid opening at 3 locations. The systems shall have been operated under pressure, temperature and site characteristics that are equal to or more severe than the operating conditions in this specification and shall have distributed the same medium. The system shall be supported by a service organization that can reach the site after a service call within 2hours.

1.6 SUBMITTALS

Government approval is required for submittals with a "GA" designation; submittals having an "FIO" designation are for information only. The following shall be submitted in accordance with Section 01330 SUBMITTAL PROCEDURES:

SD-01 Data

Pipe-Stress and System Expansion Calculations; GA.

Pipe-stress and system-expansion calculations for each expansion compensation elbow using a finite element computer generated 3 dimensional analysis, not later than 7 days after notice to proceed. Calculations shall demonstrate that pipe stresses from temperature changes are within the allowable requirements in ASME B31.1 and that the anchors and the guides will withstand the resultant forces. Detailed design layout drawings shall include all analysis node points. As a minimum, computer analysis results shall include node stresses, forces, moments and displacements. Calculations shall be stamped by a registered Professional Engineer in the employ of the UHDS manufacturer.

Cathodic Protection Installation; GA.

Design life calculations for the cathodic protection system. Calculations shall be stamped by an NACE qualified corrosion engineer.

Thermal Performance Testing; GA.

Manufacturer's data sheets on all UHDS components and the instrumentation required for thermal performance testing; and data sheets for all coatings and carrier pipe insulation indicating thicknesses.

SD-04 Drawings

Heat Distribution System; GA.

A complete description of the design and assembly of the system, materials of construction and field installation instructions, not later than 21 days prior to the start of field measurements. Submittal shall also include sufficient system details to show that the specified minimum insulation thickness has been met. A detailed design layout of the system (plan and elevation views) showing size, type, elevations and location of each component to be used in the system, the design and location of anchors, pipe guides, pipe supports, expansion loops, Z-bends, L-bends, end seals, leak plates, joint locations, pipe and insulation thickness and sizes, types, and movements, connection to manhole and building wall penetrations, and including, if applicable, details of transition point to aboveground or other type systems. Also, if applicable, type and details of the cathodic protection system to be used. Detailed design layout drawings shall be stamped by a registered Professional Engineer.

SD-07 Schedules

Interruption of Existing Service; GA.

Schedule of proposed outages and interruptions of existing services, 14 days in advance.

Operational Test; GA.

Schedule of testing, 14 days in advance.

SD-08 Statements

Work Plan; GA.

A proposed schedule of activities indicating when various items of work and tests are to be carried out and when the representative of the UHDS manufacturer shall be present at job site. A list of characteristics from the UHDS manufacturer shall be submitted indicating what defects or damage will necessitate replacement.

Quality Assurance Plan; FIO.

Manufacturer's quality assurance plan for fabrication, delivery, storage, installation and testing of system.

Tests; GA. Thermal Performance Testing; GA.

A proposed test procedure and proposed samples of test data sheets for each required test, 30 days prior to the proposed test date. The procedure shall contain a complete description of the proposed test with calibration curves or test results furnished by an independent testing laboratory of each instrument, meter, gauge, and thermometer to be used in the tests. The test shall not commence until the procedure has been approved.

SD-13 Certificates

UHDS Manufacturer; GA.

Certification stating that the UHDS manufacturer regularly and currently manufactures direct-buried systems, and that the designs of the system and equipment to be provided for this project conform to specification requirements. This certification shall be an original signed by a principal officer of the UHDS manufacturer and shall be submitted at least 2 weeks prior to the start of work.

UHDS Manufacturer's Representative; GA.

A letter from the system manufacturer, at least 2 weeks prior to the start of work, listing the experience and training of the manufacturer's representative.

UHDS Design; GA.

A Certificate of Satisfactory Operation certifying that at least 3 systems installed by the UHDS manufacturer within the previous 5 years are operating satisfactorily. The certificate shall indicate the location, type of system, size of system, point of contact (POC) including phone number, for information verification. This certificate of satisfactory operation shall be an original signed by a principal officer of the UHDS manufacturer.

Certificate of Compliance; GA.

Upon completion of the work, and before final acceptance, a notarized statement signed by a principal officer of both the UHDS manufacturer and the Contractor, certifying that the system has been

installed satisfactorily and in accordance with the contract drawings, specifications, UHDS manufacturer's detailed design layout drawings and with the UHDS manufacturer's recommendations.

Testing Firm Qualifications; FIO.

A Certificate of Qualification from the independent testing firm or firmscertifying that: weld examination methods and procedures, and the interpretation of radiographic films will be performed in accordance with ASME B31.1; the firm intends to utilize the proper film exposure, techniques, and penetrameter to produce density and geometric sharpness in sufficient clarity to determine presence of defects; and that all radiographic films will be reviewed and interpreted, and reading reports signed, by not less than a Certified American Society for Nondestructive Testing Level III Radiographer.

Welding; FIO.

Certification of Acceptability of all welds made in the field, upon completion of the project. This certification shall consist of a letter, signed by an official of the independent testing firm or firms examining welds, stating that all provisions of this specification have been complied with, and that all welds inspected radiographically have met the specified acceptability standards.

SD-18 Records

UHDS Manufacturer's Representative Reports; FIO.

A daily written report from the representative of the UHDS manufacturer, whenever the representative is required to be on the jobsite.

Connecting to Existing Work; GA.

Changes required to the UHDS design due to interferences or conflicts, upon realization of interferences or conflicts.

SD-19 Operation and Maintenance Manuals

Heat Distribution System; GA.

Operation and maintenance manual listing routine maintenance procedures, possible breakdowns and repairs, procedures for recording conduit temperatures biannually, and troubleshooting guides, before completion of work. Manual shall include as-built piping layout of the system including final elevations.

1.7 SITE CLASSIFICATION

Classification of the site conditions for the UHDS shall be based on ASTM D 2487

PART 2 PRODUCTS

2.1 FACTORY FABRICATED, DIRECT-BURIED DDT SYSTEMS

2.1.1 DDT High Temperature Hot Water Carrier Pipes

Requirements shall be in accordance with paragraph HEAT DISTRIBUTION PIPING.

2.1.3 DDT Carrier Pipe Insulation

Carrier pipe insulation shall conform to minimum thicknesses and type listed in Tables 1 and 2 as required for temperature specified under paragraph Rated Characteristics.

2.1.4 Insulation Banding and Scrim

Stainless steel bands and clips, at least 13 mm wide, conforming to ASTM A 167 (304 stainless steel), at a maximum spacing of 460 mm shall be used over the scrim to secure the insulation onto the carrier pipe; a minimum of 2 bands shall be used for each 1300 mm section of insulation. Scrim shall be vinyl-coated fiberglass with 18 x 16 mesh (number of filaments per 25 mm) and made of 0.335 mm diameter vinyl-coated fibrous glass yarn.

2.1.5 Casing

Casing shall be smooth-wall steel, electric resistance spiral welded, conforming to ASTM A 134, ASTM A 135, or ASTM A 139 and the values tabulated below. Eccentric connectors shall be provided between casing sections as needed to provide drainage of casing section between manholes and between manholes and buildings.

Casing Diameter (mm)	Minimum Thickness (mm)
150 - 660	6.35
675 - 900	6.35
940 - 1050	6.35
1170	6.35

2.1.6 Casing End Plates, Vents, and Drains

End plates shall be made of ASTM A 36/A 36M steel, minimum thickness 13 mm for conduit pipe sizes above 300 mm and 9.5 mm for conduit pipe sizes 300 mm and less. A 25 mm ASTM A 53, Sch 40, galvanized vent riser pipe shall be provided on end plate vent opening. Vent pipe shall extend to top of manhole and terminate 300 mm above grade with a 180 degree bend. A 25 mm drain shall be provided at the bottom and vent at the top. Brass plugs and half coupling, constructed with welded steel and welded to the end plate, shall be furnished; drains shall be plugged; vents shall not be plugged.

2.1.7 Air Space

Continuous 25 mm minimum air space shall be provided between carrier pipe insulation and casing.

2.1.8 Casing Coating

Coating shall be rated by manufacturer for continuous service for at least 25 years at temperatures of 110 degrees C. Coating shall be applied in accordance with the coating manufacturer's instructions, shall be factory inspected for holidays and repaired as necessary.

2.1.8.1 Fusion-Bonded Epoxy

Casing coating shall be fusion-bonded epoxy, minimum thickness 1 mm.

2.1.8.2 Urethane Elastomer

Coating shall be urethane elastomer, minimum thickness 1 mm.

2.1.9 Coating of End Plates and Conduit Extending into Manholes

End plates and conduit extending into manholes shall be coated with a zinc-rich coating conforming to AASHTO M 300 Type IA, except that volatile organic compounds shall not exceed 0.34 kg/L. The zinc-rich coating shall be applied in accordance with the coating manufacturer's requirements including surface preparation. No additional top coat shall be applied.

2.1.10 Carrier Pipe Guides

Carrier pipe guides shall be spaced 3 m on centers maximum, no more than 1.5 m from pipe ends, with a minimum of 3 guides per elbow section. Guides shall be designed to allow thermal expansion without damage, to provide proper pipe guiding, and to allow horizontal movement in 2 directions as required at expansion loops and bends. Design of supports shall permit flow of water through the support. Pipe insulation shall extend through the pipe guides and be protected by steel sleeves. Design of guides shall negate metal-to-metal contact between the casing and the carrier pipe. Insulation or non-metallic material used to ensure no metal-to-metal contact shall not be compressed by the weight of the carrier pipe when full of water.

2.1.11 Anchor Plates

Anchor plate shall be ASTM A 36/A 36M steel, welded to carrier pipe and casing, 13 mm minimum thickness, with passages for air flow and water drainage thru the annular air space in the system. Exterior surface of the anchor plate shall be coated with the same coating material as the casing.

2.1.12 Field Connection of Casing Sections

Field connection of casing shall be made using a compatible steel section, welded to casing sections, coated on all surfaces with UHDS manufacturer's coating field repair compound, and covered with a 1.3 mm minimum thickness polyethylene shrink sleeve designed for a service temperature exceeding 80 degrees C.

2.1.13 Manufacturer's Identification

Embossed brass or stainless steel tag, hung by brass or stainless steel chain at each end of each conduit or insulated piping in the manholes and buildings, shall be provided. The tag shall identify UHDS manufacturer's name, date of installation, Government contract, and manufacturer's project number.

2.3 PIPE INSULATION TYPE AND MINIMUM THICKNESS

Materials containing asbestos will not be permitted. The minimum thickness of insulation for the heat distribution system shall be in accordance with Tables 1 and 2 in which the insulations listed have passed the 96 hour boiling water test.

TABLE 1
MINIMUM PIPE INSULATION THICKNESS (mm)

High Temperature
Hot Water Supply and Return (120 to 230 degrees C).

	INSULATIONS For Drainable/Dryable Systems			INSULATIONS For other Pre-Engineered Systems	
Nominal Pipe Diameter (mm)	Paroc	Epitherm Delta	Kaylo-10 Thermo-12 Super Caltemp	WSL Calcium Silicate	Polyurethane
25	50	63	100	N/A	N/A
40	50	63	100	N/A	N/A
50	63	85	110	N/A	N/A
65	63	85	110	N/A	N/A
80	75	100	125	25	+31
100	75	100	125	25	+31
125	75	100	125	N/A	N/A
150	85	110	135	35	+34
200	85	110	135	50	+30
250	100	125	150	63	+33
300	100	125	150	50	+32
350	100	125	150	N/A	N/A
400	100	125	150	N/A	N/A
450	100	125	150	N/A	N/A

TABLE 2
MINIMUM PIPE INSULATION THICKNESS (mm)
HIGH TEMPERATURE HOT WATER RETURN SYSTEM

Nominal Pipe Diameter (mm)	Paroc	Kaylo-10 Thermo-12 Epitherm	Super Caltemp	Polyurethane
25	35	50	75	N/A
40	35	50	75	N/A
50	35	50	75	19
65	35	50	75	N/A
80	50	63	85	26
100	50	63	85	26
125	50	63	85	N/A
150	63	76	110	30
200	63	76	110	N/A
250	76	100	125	N/A
300	76	100	125	N/A
350	76	100	125	N/A
400	76	100	125	N/A
450	76	100	125	N/A

2.4 HEAT DISTRIBUTION PIPING

2.4.1 High Temperature Hot Water Pipe

Pipe material shall be steel; seamless ASTM A 53, Grade B or ASTM A 106, Grade B; or electric resistance welded ASTM A 53, Grade B; Schedule 40. Standard weight will be permitted for pipe sizes 300 mm and above. ASTM A 53, Type F furnace butt welded pipe will not be allowed. Joints will not be allowed in the factory fabricated straight section of the carrier pipe. Factory fabricated piping sections, as part of an expansion loop or bend, shall have all welded joints 100% radiographically inspected in accordance with ASME B31.1. Radiographs shall be reviewed and interpreted by a Certified American Society for Nondestructive Testing (ASNT) Level III radiographer, employed by the testing firm, who shall sign the reading report.

2.4.1.2 Joints

Joints shall be butt-weld except socket-weld joints will be permitted for pipe sizes 50 mm and smaller. Dye penetrant may be used in place of 100% radiographic inspection for pipe sizes 50 mm and below. Location and elevation of all field joints shall be indicated on detailed design layout drawings. Split-ring welding rings may be used.

2.4.2 Fittings

Welds in factory fittings shall be radiographically inspected. Radiographs shall be reviewed and interpreted by a Certified ASNT Level III radiographer, employed by the testing firm, who shall sign the reading report. The Contracting Officer may review all inspection records, and if any welds inspected

are found unacceptable in accordance with ASME B31.1, the fitting shall be removed, replaced, and radiographically reexamined at no cost to the Government.

2.4.2.1 Butt-Welded

Fittings shall be steel; ASTM A 234/A 234M, Grade B or ASME B16.9, same schedule as adjoining pipe. Elbows shall be long radius unless otherwise indicated. Tees shall be full size or reducing as required, having interior surfaces smoothly contoured. Split-ring welding rings may be used.

2.4.2.2 Socket-Welded

Fittings shall be forged steel ASME B16.11; 13,800 kPa class shall be used for pipe sizes 50 mm and below. Dye penetrant inspection may be used in lieu of radiographic inspection of welded fittings for pipe sizes 50 mm and below.

2.5 EXPANSION LOOPS AND BENDS

Stresses shall be less than the maximum allowable stress from the Power Piping Code (ASME B31.1). Detailed design layout drawings and stress and anchor force calculations shall be provided for all loops and bends. Locations of all anchors, guides and supports shall be shown. The calculations shall be based on design characteristics (pressures and temperatures) specified for both the supply and return lines.

PART 3 EXECUTION

3.1 GENERAL REQUIREMENTS

3.1.1 Job Conditions

Phasing of construction shall be as shown on contract drawings and in accordance with provisions of Section 01005, SITE SPECIFIC SUPPLEMENTARY REQUIREMENTS.

3.1.2 Interruption of Existing Service

The Contractor shall arrange, phase and perform work and provide temporary facilities, materials, equipment, and connections to utilities, to ensure adequate heat distribution service for existing installations at all times. Only necessary interruptions required for making connections will be permitted, and only at times when approval is obtained from the Contracting Officer. All interruptions shall be as approved by the Contracting Officer.

3.1.3 Grading

Unless otherwise shown on the contract drawings or the detailed design layout drawings, high temperature hot water supply/return lines shall be graded uniformly downward not less than 40 mm in 10 meters to the lower point of entry between manholes and/or building entries.

3.1.4 Connecting to Existing Work

New work shall be connected to existing work in a neat and workmanlike manner. Connections shall be made only in manholes. Where an existing structure must be cut or existing utilities interfere, such obstructions shall be bypassed, removed, replaced or relocated, restored and repaired. Any changes required to the UHDS design as a result of interferences or conflicts shall be approved by the UHDS designer and the Contracting Officer. Work disturbed or damaged shall be replaced to its prior condition.

3.1.5 Coordination

The location of all items of equipment and work of all trades shall be coordinated. Operability and maintainability of the equipment and systems shall be maintained.

3.1.6 Variations

Any variations from the approved, detailed design layout drawings shall be submitted to the Contracting Officer for approval. Variations shall be signed and sealed by the UHDS manufacturers' professional engineer responsible for the complete design of the UHDS.

3.1.7 Storage and Handling During Installation

Equipment and material placed on the job shall remain in the custody of the Contractor until final acceptance whether or not the Contractor has been reimbursed for the equipment and material by the Government. The Contractor shall be solely responsible for the protection of the equipment and material against damage from any source while stored or during installation. Materials shall be protected against damage from UV light, and entry of water and mud, by installing watertight protection on open ends at all times. Sections of the casing or carrier piping found to have been subjected to full or partial submergence in water (which would allow the insulation to become wet) shall be immediately replaced. Materials awaiting installation shall be covered to protect from UV degradation.

3.2 DEMOLITION

3.2.1 Demolition Procedures

Work shall be performed in accordance with requirements for phasing. Pipe, valves, fittings, insulation, and hangers, including the connection to the structure and any fastenings, shall be removed. Openings in manhole or building walls shall be sealed after removal of piping. Material and equipment removed shall become the property of the Contractor and shall be removed from Government property within 1 week and shall not be stored in operating areas. Flame cutting shall be performed with adequate fire protection facilities available as required by safety codes and Contracting Officer.

3.2.2 Asbestos Removal

Asbestos removal shall conform to Section 02080 ASBESTOS ABATEMENT.

3.3 PIPE, PIPING JOINTS AND FITTINGS

3.3.1 Joint Preparation

Pipe and fittings shall be cleaned inside and outside before and after assembly. Dirt, scale, and other foreign matter shall be removed from inside the piping by use of a pipe swab or pipe pig before connecting pipe sections, valves, equipment or fittings. Eccentric connectors shall be used as needed between casing sections to provide drainage of casing section between manholes and between manholes and buildings.

3.3.2 Direction Changes

Changes in direction shall be made with factory-built reinforced fittings. Field-fabricated fittings and miters will not be permitted.

3.4 WELDING

The Contractor shall be responsible for welding quality and shall:

a. Conduct tests of the welding procedures used in the work, determine the suitability of the procedures used, determine that the welds made will meet the required tests, and determine that the welding operators have the ability to make sound welds under standard conditions.

b. Comply with ASME B31.1.

c. Perform all welding operations required for construction and installation of the heat distribution system.

3.4.1 Qualification of Welders

Rules of procedure for qualification of all welders and general requirements for fusion welding shall conform with the applicable portions of ASME B31.1, and as outlined below.

3.4.2 Examining Welders

The Contractor shall examine each welder to determine the ability of the welder to meet the required qualifications. Welders shall be tested for welds in all positions, including welds with the axis horizontal (not rolled) and with the axis vertical. Each welder shall:

a. Weld only in positions in which they have qualified.

b. Identify welds with the specific code marking signifying name and number assigned.

3.4.3 Examination Results

The Contractor shall furnish a list of welder's names and corresponding code markings. Welders which fail to meet the prescribed welding qualifications shall be retested. Welders who fail the second test shall be disqualified for work on this project.

3.4.4 Beveling

Field and shop bevels shall be done by mechanical means or by flame cutting. Where beveling is done by flame cutting, surfaces shall be thoroughly cleaned of scale and oxidation just prior to welding.

3.4.5 Alignment

Split welding rings shall be used for field joints on carrier pipes above 50 mm to assure proper alignment, complete weld penetration, and prevention of weld spatter reaching the interior of the pipe. Field joints 50 mm and smaller shall be made with welding sockets.

3.4.6 Erection

Piping shall not be split, bent, flattened, or otherwise damaged before, during, or after installation. Where the pipe temperature falls to 0 degrees C or lower, the pipe shall be heated to approximately 38 degrees C for a distance of 300 mm on each side of the weld before welding, and the weld shall be finished before the pipe cools to 0 degrees C.

3.4.7 Defective Welds

Defective welds shall be replaced and reinspected in accordance with ASME B31.1. Repairing defective welds by adding weld material over the defect or by peening will not be permitted. Welders responsible for defective welds shall be tested for qualification.

3.4.8 Electrodes

Electrodes shall be stored in a dry, heated area, and shall be kept free of moisture and dampness during fabrication operations. Electrodes that have lost part of their coating shall not be used.

3.4.9 Radiographic Testing

An approved independent testing firm regularly engaged in radiographic testing shall perform radiographic examination of 100% of the field welds in the carrier piping of direct-buried systems in accordance with ASME B31.1. The following shall be furnished: a set of films showing each weld inspected, a reading report evaluating the quality of each weld, and a location plan showing the physical location where each weld is to be found in the completed project, prior to installing casing field joints, backfilling and hydrostatic testing. All radiographs shall be reviewed and interpreted by a Certified American Society for Nondestructive Testing Level III radiographer, employed by the testing firm, who shall sign the reading report. The Contracting Officer may review all inspection records, and if any welds inspected are found unacceptable they shall be removed, rewelded, and radiographically reexamined at no cost to the Government.

3.5 HEAT DISTRIBUTION SYSTEM INSTALLATION

The UHDS manufacturer's representative shall oversee the delivery, storage, installation and testing of the system. Work shall be in accordance with the requirements specified and with the printed instructions of the manufacturer. These specifications shall take precedence over the printed

instructions if conflicts arise. Printed instructions shall be submitted to the Contracting Officer prior to system installation.

3.5.1 Verification of Final Elevations

Prior to covering the top of the casing with backfill material, but after all temporary supports have been removed and initial backfilling of the conduit system has been accomplished, the Contractor shall measure and record the elevation of the top of the casing in the trench. Elevations shall be taken at every completed field joint, 1/3 points along each pipe section and top of elbows. These measurements shall be checked against the contract drawings and shall confirm that the conduit system has been installed to the elevations shown on the contract drawings. Slope shall be uniform to within 0.1%. These measurements shall be recorded by the Contractor, included in the UHDS manufacturer's representative daily report, and given to the Contracting Officer prior to covering the casing with backfill material.

3.5.2 Excavation, Trenching, and Backfilling

Excavation, trenching, and backfilling shall be performed as required by the UHDS manufacturer's design and as specified in Section 02316 EXCAVATION, TRENCHING, AND BACKFILLING FOR UTILITIES SYSTEMS. Pipe shall lay on a 305 mm minimum sand bed and shall be backfilled with sand on all sides to a minimum of 150 mm as measured from outside of casing. Foundation for system shall be firm and stable. Foundation and backfill shall be free from rocks or substances which could damage the system coating. Concrete anchor and thrust blocks shall be installed in undisturbed earth. Backfilling shall not commence until system has been satisfactorily pressure tested (both hydrostatic test of carrier and air test of casing). Minimum depth of burial to the top of the casing shall be 1 meter. Maximum depth of burial to the top of the casing shall be 3 meters.

3.5.3 UHDS Manufacturer's Representative Responsibilities

The UHDS Manufacturer's representative shall be present at the job site and witness when the following types of work are being performed:

a. Inspection and unloading.

b. Inspection of trench prior to commencing installation of system.

c. Inspection of concrete anchors and thrust blocks.

d. Pneumatic and Hydrostatic testing.

e. Field joint closure work.

f. Air test of casing.

g. Holiday test of conduit coating.

h. Repair of any coating.

i. Installation of cathodic protection system.

j. Initial backfill up to 250 mm above the top of the casing.

k. Verification of final elevations. Elevation readings shall be witnessed and recorded.

l. Testing of cathodic protection system.

m. Operational tests.

The UHDS manufacturer's representative shall notify the Contractor immediately of any problems. The UHDS manufacturer's representative shall notify the Contracting Officer of problems requiring immediate action; otherwise, the daily reports shall note any problems encountered and indicate the corrective actions taken.

3.5.4 UHDS Manufacturer's Representative Reports

The UHDS manufacturer's representative shall: prepare and sign a written daily report; present the original daily report to the Contracting Officer no later than one working day after it is prepared; and forward 1 copy to the manufacturer's main office. The report shall state whether or not the condition and quality of the materials used and the delivery, storage, installation and testing of the system are in accordance with the drawings, specifications, and manufacturer's printed instructions and are satisfactory in all respects. When any work connected with the installation is unsatisfactory, the report shall state what corrective action has been taken or shall contain the UHDS manufacturer's recommendations for corrective action. The report shall identify any condition that could result in an unsatisfactory installation, including such items as open conduit ends left in the trench overnight and improper manhole entries. The daily reports shall be reviewed, signed and sealed, on a weekly basis, by the registered engineer responsible for the system design. Signed and sealed copies of the daily reports shall be submitted with the payment request. Requests for payment will be denied if the weekly review is not accomplished. Upon completion of the work and before final acceptance, a notarized Certificate of Compliance, signed by a principal officer of both the manufacturing and the contracting firms, stating that the installation is satisfactory and in accordance with drawings, specifications, and manufacturer's instructions shall be delivered to the Contracting Officer. The UHDS manufacturer shall retain a copy of all daily reports and the Certificate of Compliance for 5 years after final acceptance of the system by the Government.

3.5.5 Protection

Casing coating shall be protected from damage during unloading, storage, rigging and installation. Casing and carrier pipe ends shall be protected from water intrusion during unloading, storage, rigging and installation. Piping and accessories shall be protected from damage due to exposure to UV light.

3.5.6 Defective Material

The UHDS manufacturer's representative shall take prompt action to remove from the site all damaged or defective material, subject to rejection in accordance with the quality assurance provisions included in the manufacturer's submittals and printed instructions, and shall order prompt replacement of such material.

3.5.7 Cathodic Protection Installation

Cathodic protection shall be provided for steel casing systems and buried exposed metal where 25% of the exterior of the UHDS is exposed metal. Cathodic protection systems shall have a minimum design life of 25 years and shall conform to Section 13110 CATHODIC PROTECTION SYSTEM (SACRIFICIAL ANODE) or Section 13112 CATHODIC PROTECTION SYSTEM (IMPRESSED CURRENT). Dielectric pipe flanges and unions, and isolation devices shall be provided at all points necessary. Test stations at grade shall be provided on each section of the piping system. Isolation flanges and unions shall be rated for the service temperature and pressure.

3.6 TESTS

Leak-tightness of all piping systems shall be demonstrated by performing pressure tests (hydrostatic, pneumatic) and operational tests. Heat distribution system shall be pressure tested in conformance with specified requirements and printed instructions for the system supplied; tests shall include carrier piping and casing. The carrier pipe shall be hydrostatically tested. Casings of DDT systems shall be pneumatically tested. Casing and end seals of WSL system shall be tested for intrusion of water into the casing and insulation.

3.6.1 Holiday Testing of Direct-buried System Steel Casings

Entire exterior surface of the casing, including the bottom exterior surface, shall be tested for faults in coating after installation in trench, prior to backfilling, using test method and voltage recommended by coating manufacturer. If any holidays are found, they shall be repaired and the coating retested. System shall not be backfilled until all holidays are eliminated.

3.6.2 Pneumatic, Hydrostatic and Operational Tests

Before conducting heat distribution system tests, lines shall be flushed with high pressure water until [discharge shows no foreign matter] [the Contracting Officer, after examining the discharge, stops the flush].

3.6.2.1 Pneumatic Test

The casing of DDT systems shall be pneumatically tested after welding and before field coating using air as the test medium. The test pressure shall be 103 kPa. Persons not working on the test operations shall be kept out of the testing area while testing is proceeding. The test shall be made on the system as a whole or on sections that can be isolated. Joints in sections shall be tested prior to backfilling when trenches must be backfilled before the completion of other pipeline sections. The test shall continue for 24 hours from the time of the initial readings to the final readings of pressure and temperature. The initial test readings of the instrument shall not be made for at least 1 hour after the casing has been subjected to the full test pressure, and neither the initial nor final readings shall be made at times of rapid changes in atmospheric conditions. There shall be no indication of reduction of pressure during the test after corrections have been made for changes in atmospheric conditions in conformity with the relationship $T(1)P(2) = T(2)P(1)$, in which T and P denote absolute temperature and pressure, respectively, and the numbers denote initial (1) and final (2) readings. Pressure shall be measured with a pressure gauge conforming to ASME B40.1. A throttling type needle valve or a pulsation dampener

and shutoff valve may be included. The diameter of the face shall be at least 114 mm with a measurable range of 0 to 103 kPa and graduations of at least 0.5 kPa. During the test, the entire system shall be completely isolated from all compressors and other sources of air pressure. Each joint shall be tested while under test pressure by means of soap and water or an equivalent nonflammable solution prior to backfilling or concealing any work. All labor, materials and equipment for conducting the tests shall be furnished by the Contractor and shall be subject to inspection at all times during the tests. The Contractor shall maintain proper safety precautions for air pressure testing at all times during the tests.

3.6.2.2 Hydrostatic Test

Carrier piping shall be tested hydrostatically before insulation is applied at field joints and shall be proved tight at a pressure 1.5 times the heat distribution supply pressure of 1248 kPa for 2 hours. There shall be no indication of reduction of pressure during the test. Pressure shall be measured with a device calibrated to be read in increments not greater than 1 kPa.

3.6.2.3 Operational Test

Prior to acceptance of the installation, Contractor shall subject system to operating tests simulating actual operating conditions to demonstrate satisfactory functional and operating efficiency. These operating tests shall cover a period of not less than 6 hours for each portion of system tested. Contractor shall submit for approval a schedule of the tests to be performed. The contractor shall provide calibrated instruments, equipment, facilities and labor, at no additional cost to the Government. When failures occur, problems shall be repaired and test repeated.

3.6.3 Deficiencies

Deficiencies discovered shall be corrected at the Contractor's expense. Major deficiencies, or failure to correct deficiencies, may be considered cause for rejecting the entire installation.

3.8 BURIED UTILITY WARNING AND IDENTIFICATION

3.8.1 Plastic Marking Tape

Polyethylene plastic tape manufactured specifically for warning and identifying buried utility lines shall be supplied and installed. Tape shall be buried above the pipe during the trench backfilling operation and shall be buried approximately 300 mm below grade. Tape shall be 0.1 mm (0.004 inch) thick polyethylene. Tape shall be acid- and alkali-resistant and shall have a minimum strength of 12 MPa lengthwise and 10.3 MPa crosswise with an elongation factor of 350 percent. The tape shall be manufactured with integral wires, foil backing or other means to enable detection by a metal detector when the tape is buried up to 1 m deep. The metallic core of the tape shall be encased in a protective jacket or provided with other means to protect it from corrosion. The tape shall be of a type specifically manufactured for marking and locating metallic underground utilities. Tape shall be 150 mm wide and printed with a caution and identification of the piping system over the entire tape length. Tape shall be yellow with bold black letters. Tape color and lettering shall be unaffected by moisture and other substances contained in the backfill material.

3.8.2 Markers for Underground Piping

Markers for underground piping shall be located along the distribution and service lines. Markers shall be placed as indicated approximately 600 mm to the right of the distribution system when facing in direction of flow in the supply line. The marker shall be concrete 150 mm square or round section 900 mm long. The top edge of the marker shall have a minimum 13 mm chamfer all around. The letters HTHW shall be impressed or cast on the top, and on one side of the markers to indicate the type of system that is being identified. Each letter shall be formed with a V-shaped groove and shall have a width of stroke at least 6 mm at the top and depth of 6 mm. The top of the marker shall protrude not more than 50 mm above finished grade.

END OF SECTION

SECTION 02555

PREFABRICATED UNDERGROUND COOLING DISTRIBUTION SYSTEM

PART 1 GENERAL

1.1 REFERENCES

The publications listed below form a part of this specification to the extent referenced. The publications are referred to in the text by basic designation only.

AMERICAN SOCIETY FOR TESTING AND MATERIALS (ASTM)

ASTM C 518	(1991) Steady-State Heat Flux Measurements and Thermal Transmission Properties by Means of the Heat Flow Meter Apparatus
ASTM C 591	(1994) Unfaced Preformed Rigid Cellular Polyisocyanurate Thermal Insulation
ASTM D 1248	(1984; R 1989) Polyethylene Plastics Molding and Extrusion Materials
ASTM D 1784	(1996) Rigid Poly(Vinyl Chloride) (PVC) Compounds and Chlorinated Poly(Vinyl Chloride) (CPVC) Compounds
ASTM D 2241	(1996a) Poly(Vinyl Chloride) (PVC) Pressure-Rated Pipe (SDR Series)
ASTM D 2564	(1996a) Solvent Cements for Poly(Vinyl Chloride) (PVC) Plastic Piping Systems
ASTM D 3139	(1996a) Joints for Plastic Pressure Pipes Using Flexible Elastomeric Seals
ASTM D 5686	(1995) "Fiberglass" (Glass-Fiber-Reinforced Thermosetting-Resin) Pipe and Pipe Fittings, Adhesive Bonded Joint Type Epoxy Resin, for Condensate Return Lines
ASTM F 477	(1995) Elastomeric Seals (Gaskets) for Joining Plastic Pipe

AMERICAN SOCIETY OF MECHANICAL ENGINEERS (ASME)

ASME B31.1 (1995; B31.1a; B31.1b) Power Piping

1.2 SYSTEM DESCRIPTION

The system consists of a buried prefabricated chilled water distribution system including service connections to a point 150 mm inside of the building. The contract drawings show the specific arrangement of piping, sizes and grades of pipe, and other details. The system is designed for an operating temperature of 7.2 degrees C for chilled water.

1.3 SUBMITTALS

Government approval is required for submittals with a "GA" designation; submittals having an "FIO" designation are for information only. The following shall be submitted in accordance with Section 01330 SUBMITTAL PROCEDURES:

SD-01 Data

Distribution System; GA.

Data composed of catalog cuts, brochures, circulars, specifications and product data, and printed information in sufficient detail and scope to verify compliance with the requirements of the contract documents.

SD-04 Drawings

Distribution System; FIO.

Detail drawings consisting of fabrication and assembly drawings, for all parts of the work in sufficient detail to check conformity with the requirements of the contract documents, prior to installation. Detail drawings shall also contain complete piping, wiring and schematic diagrams and any other details to demonstrate that the system has been coordinated and will properly function as a unit. Drawings shall show proposed layout, method of compensation for pipe expansion and contraction, anchorage of equipment and appurtenances, and equipment relationship to other parts of the work including clearances required for maintenance and operation. The drawings shall clearly identify any proposed deviations from the requirements of the contract documents.

SD-13 Certificates

Distribution System; FIO.

The manufacturer's or system fabricator's written certification stating that the distribution system furnished meets all the requirements of this specification.

SD-19 Operation and Maintenance Manuals

Distribution System; GA.

Six copies of operation and 6 copies of maintenance manuals for the equipment furnished, 1 complete set prior to performance testing and the remainder upon acceptance. Operation manuals shall detail the step-by-step procedures required for equipment startup, operation, and shutdown. Operation manuals shall include the manufacturer's name, model number, parts list, and brief description of all equipment and their basic operating features. Maintenance manuals shall list routine maintenance procedures, possible breakdowns and repairs, and troubleshooting guides. Maintenance manuals shall include piping and equipment layout and simplified wiring and control diagrams of the equipment system as installed. Manuals shall be approved prior to the field performance testing.

1.4 DELIVERY AND STORAGE

After delivery to the jobsite, all materials and equipment shall be protected from anything which could cause damage to the material or equipment. Pipe shall be sealed at each end to keep the interior clean and free of dirt and debris. Fittings shall be kept together and their interior surfaces shall remain clean. Insulation shall be kept dry and clean.

1.5 FIELD MEASUREMENTS

The Contractor shall become familiar with all details of the work, verify all dimensions in the field and shall advise the Contracting Officer of any discrepancy before performing the work.

PART 2 PRODUCTS

2.1 STANDARD PRODUCTS

System components shall be standard products of a manufacturer regularly engaged in the manufacture of the product and shall essentially duplicate items that have been in satisfactory use for at least 2 years prior to bid opening. The system shall be supported by a service organization that is, in the opinion of the Contracting Officer, reasonably convenient to the site.

2.2 PIPING AND CASING MATERIALS

2.2.1 General

Metallic pressure pipe, fittings, and piping accessories shall conform to the requirements of ASME B31.1 and shall be types suitable for the temperature and pressure of the water.

2.2.2 Piping

2.2.2.3 Reinforced Thermosetting Resin Pipe (RTRP)

RTRP pipe shall conform to ASTM D 5686.

2.2.2.4 Polyvinyl Chloride (PVC) Pipe

PVC pipe shall conform to ASTM D 2241 with a Standard Thermoplastic Pipe Dimension Ratio (SDR) of 26 and PVC 1120 or 1220 as the material.

2.2.3 Casings

2.2.3.1 Polyvinyl Chloride (PVC) Casing

PVC casings shall conform to ASTM D 1784, Class 12454-B with a minimum thickness equal to the greater of 1/100 the diameter of the casing or 1.50 mm.

2.2.3.2 Polyethylene (PE) Casing

Polyethylene casings shall conform to ASTM D 1248, Type III, Class C, Category 3 or 4, Grade P 34 with thickness as follows:

Casing Diameter (in mm)	Minimum Thickness (in mm)
250 and smaller	3
250 to 450	4
450 to 600	5
over 600	6

2.2.3.3 Reinforced Thermosetting Resin Pipe (RTRP) Casing

RTRP casing shall be of the same material as the pipe, with casing thickness as follows:

Casing Diameter (in mm)	Minimum Thickness (in mm)
200 and smaller	1.2
250	2
300	2.7
350	2.9
400 to 450	3
500	3.2
600	3.9

2.3 PIPING CONNECTIONS

2.3.3 Plastic Pipe

a. Pipe, fittings, flanges, and couplings shall have end connections of the adhesive bell and spigot type. Threaded piping, including pipe, fittings, flanges, and couplings, will not be permitted.

b. Flanged Connections: Flat face flanged connections shall be provided between plastic piping and metal piping. Plastic flanges shall be suitable for connection to ASME Class 150 flanges.

c. RTRP Piping Sizes: When piping sizes other than 50, 75, 100, 150, and 200 mm (2, 3, 4, 6, and 8 inches) are indicated, the next larger piping size shall be provided. The connecting system piping shall be of the same size or increased to meet the next size of RTRP piping.

2.3.3.1 General

Plastic fittings shall be made of the same type and grade of material as the piping to which they will be connected and shall be furnished by the manufacturer who supplies the pipe. Fittings shall have temperature and pressure ratings not less than those of the connecting piping.

2.3.3.2 Polyvinyl Chloride (PVC)

Polyvinyl chloride (PVC) pipe shall be solvent welded or connected using bell and spigot connections. The solvent used to connect fittings and pipe shall conform to the requirements of ASTM D 2564. Bell and spigot joints utilizing elastomeric seals shall conform to the requirements of ASTM D 3139. The elastomeric seals shall conform to ASTM F 477.

2.3.3.3 Reinforced Thermosetting Resin Plastic (RTRP)

Reinforced thermosetting resin plastic pipe shall be joined using fittings and adhesive furnished by the pipe manufacturer in accordance with ASTM D 5686.

2.4 END SEALS

2.4.1 General

Each preinsulated section of piping shall have a complete sealing of the insulation to provide a permanent water and vapor seal at each end of the preinsulated section of piping. Preinsulated sections of piping modified in the field shall be provided with an end seal which is equivalent to the end seals furnished with the preinsulated section of piping. End seals must be tested and certified in accordance with paragraph Casing and End Seal Testing and Certification.

2.4.2 Types

End seals provided shall be one of the following types:

a. Carrying the outer casing over tapered pipe insulation ends and extending it to the carrier pipe. Sufficient surface bonding area shall be provided between the casing and the carrier pipe.

b. Using specially designed molded caps made of polyethylene or rubber of standard manufactured thickness. A minimum 40 mm surface bonding area shall be provided between the cap and both the casing and carrier pipe.

c. Using elastomer-ring end seals designed and dimensioned to fit in the annular space between the casing and the carrier pipe.

d. Using a waterproof mastic seal vapor barrier over the exposed insulation ends.

e. Shrink sleeves.

2.4.3 Casing and End Seal Testing and Certification

Testing and certification procedures by an independent testing laboratory shall demonstrate that casings and end seals are capable of resisting penetration of water into the casing and insulation. The test shall be performed on the type of prefabricated system to be furnished. If more than one type of prefabricated system is to be used, then the tests shall be performed on each type. The test shall consist of hot and cold cycle testing followed by immersion in a water filled chamber with a head pressure. The hot and cold cycle testing shall consist of 14 days of temperature cycling. A fluid with a temperature of 5 degrees C shall circulate through the carrier pipe alternating every 24-hours with a fluid with a temperature of 95 degrees C circulating through the carrier pipe for a low temperature hot water or dual temperature service or 24 degrees for a chilled water service. While the hot and cold cycle test is being performed, the test sample is either buried or encased in dry bedding sand with a minimum of 300 mm of sand all around the test sample. The carrier pipe size of the test sample shall be 80 mm (3 inches) in diameter and shall be restrained during the test period. The insulation thickness shall not exceed the maximum thickness provided for the piping in the project. Transition time for temperature cycle testing shall not exceed 15 minutes in going from cold to hot and 30 minutes in going from hot to cold. The fluid in the carrier pipe may be water, oil or heat transfer fluid. Following the hot and cold cycling test, the test sample shall be immersed in a water filled chamber. The pressure on the highest point of the test sample shall not be less than 60 kPa subjected over the entire length of the 2.4 m test sample of prefabricated pipe. The water shall contain a dye penetrant, which will be used to check for end seal leakage. The pressure in the chamber must be held for not less than 48 hours. Upon completion of this pressure test, the test sample shall be cut open. With the use of a light that will readily show the presence of the dye that was in the water, the test sample shall be inspected. Evidence of the dye inside the test sample shall indicate that the end seal is not acceptable and cannot be certified. A pipe manufacturer who has a current Federal Letter of Acceptability for a system furnished under this section will be exempt from the testing specified in this paragraph.

2.5 INSULATION

2.5.1 Factory Applied Insulation

Prefabricated pipe and fittings shall be insulated in the factory. Foam insulation for prefabricated insulated pipe and fittings shall be polyurethane foam meeting the requirements of ASTM C 591 having a density not less than 32 kg per cubic meter. The polyurethane foam shall completely fill the annular space between the carrier pipe and the casing. Insulation thickness shall be a minimum of 40 mm. The insulation thermal conductivity factor shall not exceed the numerical value of 0.02 W/mK (0.15 Btu-inch/square foot-degree F-hour) at 24 degrees C, when tested in accordance with ASTM C 518. Manufacturer shall certify that the insulated pipe is free of insulation voids.

2.5.2 Field Applied Insulation

Field applied insulation for fittings, and field casing closures, if required, and other piping system accessories shall be polyurethane matching the pipe insulation. Thickness shall match adjacent piping insulation thickness. Buried fittings and accessories shall have field applied polyurethane insulation to match adjacent piping and shall be protected with a covering matching the pipe casing. Shrink sleeves with a minimum thickness of 1.3 mm shall be provided over casing connection joints.

PART 3 EXECUTION

3.1 INSTALLATION

For all preinsulated, prefabricated systems, the Contractor shall obtain the services of a trained representative of the pipe system manufacturer to instruct the Contractor's work forces in the installation procedures to ensure that the system is installed in accordance with the manufacturer's published instructions and the plans and specifications. The manufacturer's representative shall be a person who regularly performs such duties for the manufacturer. The Contractor shall furnish the Contracting Officer a list of names of personnel trained and certified by the pipe system manufacturer in the installation of this system. Only personnel whose names appear on the list will be allowed to install the system. The list shall not be more than 1 year old.

3.2 PIPING SYSTEMS

3.2.1 Buried Insulated Systems

Buried insulated systems shall consist of carrier pipe, insulation, casing, end seals, fittings and accessories as specified.

3.2.2 Buried Uninsulated Systems

Buried uninsulated systems shall consist of carrier pipe, fittings and accessories as specified.

3.4 THRUST BLOCKS

Thrust blocks shall be installed at the locations shown or recommended by the pipe system manufacturer. Thrust blocks may not be required on all systems, and the need for thrust blocks shall be as recommended by the system manufacturer. Thrust blocks, if necessary, shall be installed at all changes in direction, changes in size, valves and terminal ends, such as plugs, caps and tees. Thrust blocks shall be concrete having a compressive strength of not less than 14 MPa (2000 psi) after 28 days and shall be in accordance with Section 03300CAST-IN-PLACE STRUCTURAL CONCRETE. Thrust blocks shall be placed between solid ground and the fitting to be anchored. Unless otherwise indicated or directed, the base and the thrust bearing sides of the thrust blocks shall be poured directly against undisturbed earth. The sides of the thrust blocks not subject to thrust may be poured against forms. Thrust blocks shall be placed so that the joints for all fittings will be accessible for repair wherever possible. No pipe joint shall be embedded in concrete unless the assembly has previously been hydrostatically tested. The thrust blocks shall provide for transfer of thrusts and reactions without

exceeding the allowable stress of the concrete and shall be installed in accordance with pipe manufacturer's instructions. In muck or peat, all thrusts shall be resisted by piles or tie rods to solid foundations or by removal of peat or muck which shall be replaced with ballast of sufficient stability to resist thrusts.

3.5 INSTALLATION OF PIPING SYSTEMS

The piping system furnished shall be installed in accordance with the piping system manufacturer's instructions. Piping shall be installed without springing or forcing other than what has been calculated for cold spring. Pipe ends shall have burrs removed by reaming and shall be installed to permit free expansion and contraction without damage to joints or hangers. Nonmetallic pipe cut in the field shall be machined to fit couplings or joints and shall be coated or treated to match standard factory coated ends. Copper tubing shall not be installed in the same trench with ferrous piping materials. When nonferrous metallic pipe (e.g., copper tubing) crosses any ferrous piping material, a minimum vertical separation of 300 mm shall be maintained between pipes. Connections between different types of pipe and accessories shall be made with transition fittings approved by the manufacturer of the piping system.

3.5.1 Pitching of Horizontal Piping

Horizontal piping shall be pitched at a grade of not less than 40 mm in 1 m toward the drain points unless otherwise indicated.

3.5.2 Open Ends

Open ends of pipelines and equipment shall be properly capped or plugged during installation to keep dirt and other foreign matter out of the system.

3.5.3 Cutting Prefabricated Piping Sections

Where prefabricated pipe sections are field cut, new end seals similar to the factory applied end seal shall be provided and installed in accordance with the manufacturer's instructions.

3.5.4 Joints

3.5.4.4 Nonmetallic Pipe Joints

Nonmetallic pipe joints shall be installed in accordance with the written instructions of the manufacturer.

3.5.5 Expansion Loops

If expansion compensation is needed, expansion loops and expansion bends (Z- and L- type) shall be factory fabricated of casing, insulation, and carrier piping identical to that furnished for straight runs. Expansion loops and bends shall be properly designed in accordance with the allowable stress limits indicated in ASME B31.1 for the type of pipe used. Expansion loops and bends shall be shipped to the jobsite in the maximum size sections feasible to minimize the number of field joints. The expansion loops and bends casing and insulation where applicable, shall be suitably sized to accommodate pipe movement. Field joints shall be made in straight runs of the expansion loops and bends, and the number

shall be kept to a minimum. For steel pipe, cold springing shall not be allowed when sizing the expansion loops and bends, but piping shall be cold sprung one-half the calculated maximum operational expansion during field assembly. Pipe stress in expansion loops and bends shall conform to the requirements for expansion loops specified in ASME B31.1.

3.5.6 Anchors

Anchor design shall be in accordance with the published data of the manufacturer and for prefabricated systems shall be factory fabricated by the prefabricated system manufacturer. In all cases, the design shall be such that water penetration, condensation, or vapor transmission will not wet the insulation.

3.5.7 Field Casing Closures

Field insulation and encasement of joints shall be accomplished after the visual and pressure tests specified are completed. Field insulation and encasement shall be in accordance with the manufacturer's written instructions. Thickness dimensions of the insulation and casing materials shall not be less than those of the adjoining prefabricated section. Insulating material shall be foamed in place polyurethane. Care should be taken to ensure that field closures are made under conditions of temperature and cleanliness required to produce a sound, continuous vapor barrier. A standard polyethylene heat shrink sleeve shall be installed over the casing and shall have a 150 mm minimum overlap at each end.

3.5.8 Underground Warning Tape

Underground warning tape shall be buried above the piping during the trench backfilling and shall be buried approximately 300 mm deep. Tape shall be 0.1 mm thick polyethylene tape. Tape shall be 150 mm wide and be printed with repetitive caution warnings along its length. Tapes shall be yellow in color with black letters. Tape color and lettering shall not be affected by moisture or other substances contained in the backfill material. When polyethylene piping is installed underground, foil-backed magnetic tape shall be placed above the pipe to permit locating with a magnetic detector.

3.6 EARTHWORK

Earthwork shall be performed in accordance with Section 02316 EXCAVATION, TRENCHING, AND BACKFILLING FOR UTILITIES SYSTEMS.

3.7 ELECTRICAL WORK

Electrical work shall be performed in accordance with either Section 16375 ELECTRICAL DISTRIBUTION SYSTEM, UNDERGROUND.

3.8 TESTING

Tests shall be conducted before, during, and after installation of the system. All instruments, equipment, facilities, and labor required to properly conduct the tests shall be provided by the Contractor. Test pressure gauges for a specific test shall have dials indicating not less than 1-1/2 times nor more than 2 times the test pressure. It shall be the Contractor's responsibility to make the pipe system workable at his expense.

3.8.2 Carrier Pipe Cleaning and Testing

Distribution piping shall be tested as required before backfilling and with all joints exposed. The area between joints may be backfilled as necessary to prevent pipe movement.

3.8.2.1 Cleaning Carrier Pipe

Prior to testing, the interior of the carrier pipe shall be cleaned of foreign materials by thorough flushing with clean water. Water shall be circulated at a velocity between 2 and 3 m/s (7 and 10 feet per second) for a minimum of 4 hours. If required, temporary and/or supplementary pumps shall be provided to ensure that required velocity is achieved. System strainers shall be cleaned after the flushing operation is complete. Temporary strainers shall be installed as required. After flushing, the water shall remain in the piping system for testing of the system. All air shall be removed from the system prior to starting the tests.

3.8.2.2 Hydrostatic Pressure Cycling and Tests

Hydrostatic pressure cycling shall have 4 cycles. Each cycle shall consist of a 10 minute period at 1000 kPa followed by a 5 minute period at a pressure less than 350 kPa. The next cycle shall begin immediately following the completion of the previous cycle. Pressure rise and drop shall not exceed 690 kPa per minute. The pressure gauge shall be located and the pressure measured at the opposite end of the system from where the pressure is applied. After completion of the hydrostatic pressure cycling, the first hydrostatic pressure test shall be performed. During the first hydrostatic pressure test, the system shall be proven tight at a pressure of 1-1/2 times the working pressure up to 1000 kPa. This pressure shall be held for a minimum of 1 hour. The method of pressurizing the system shall be disconnected from the system before starting the 1 hour pressure holding period. If the pressure cannot be held for the specified length of time, the cause of pressure loss shall be determined, corrected and the hydrostatic pressure cycling and first hydrostatic pressure test shall be repeated until the system can hold the required pressure for at least 1 hour. After successful completion of the first hydrostatic pressure test, the water shall be drained out of the piping system and the piping system filled with treated water as defined in paragraph TREATED WATER for the remaining tests and for permanent operation of the system. The hydrostatic pressure cycling and tests shall be repeated after the system has been filled with treated water, using the same test conditions and criteria.

3.8.2.3 Operational Test

Operational test shall be performed on the complete system or testable portions thereof. The test shall be conducted with full design flows and operating temperatures in all runs of piping as if in service, to demonstrate satisfactory function and operating effectiveness. The operational test will have two cycles. Each cycle shall consist of a 6-hour period with treated water in the system at the maximum operating temperature of 7.2 degrees C and maximum flow rate, and a period of at least 6-hours with no flow. The Contractor shall supply temporary pumps, piping connections, boilers, chillers and the gauges required to circulate the water at the desired temperatures and flow rates. Water shall be circulated through supply lines and returned through the return piping to demonstrate that the pressure drop is compatible with the flow rate and size of pipe and to show that obstructions do not exist in the piping system. Any unusual indicated pressure drop will be investigated and any obstructions removed.

Any leaks found shall be repaired. After any obstructions have been removed and any leaks repaired, the operational test shall be repeated until successfully passed.

3.8.2.4 Final Hydrostatic Test

After successful completion of the operational test, the system shall be pressurized to 1-1/2 times the working pressure up to 1000 kPa. This pressure shall be held for a minimum of 4 hours. Means of pressurizing shall be disconnected prior to the start of the 4-hour pressure holding period. If the pressure cannot be held for the specified length of time, the cause of the pressure loss shall be determined, corrected, and all of the hydrostatic pressure cycling and tests repeated.

END OF SECTION

This page intentionally blank

SECTION 02556

GAS DISTRIBUTION SYSTEM

PART 1 GENERAL

1.1 REFERENCES

The publications listed below form a part of this specification to the extent referenced. The publications are referred to in the text by basic designation only.

AMERICAN GAS ASSOCIATION (AGA)

AGA Manual	(1994; addenda/correction Jan 1996) A.G.A. Plastic Pipe Manual for Gas Service

AMERICAN NATIONAL STANDARDS INSTITUTE (ANSI)

ANSI B109.2	(1992) Diaphragm Type Gas Displacement Meters (500 Cubic Feet per Hour Capacity and Over)

AMERICAN PETROLEUM INSTITUTE (API)

API Spec 6D	(1994; Supple 1 June 1996; Supple 2 Dec, 1997) Pipeline Valves (Gate, Plug, Ball, and Check Valves)

AMERICAN SOCIETY FOR TESTING AND MATERIALS (ASTM)

ASTM D 2513	(1996a) Thermoplastic Gas Pressure Pipe, Tubing, and Fittings
ASTM D 2517	(1994) Reinforced Epoxy Resin Gas Pressure Pipe and Fittings
ASTM D 2683	(1995) Socket-Type Polyethylene Fittings for Outside Diameter-Controlled Polyethylene Pipe and Tubing
ASTM D 3261	(1996) Butt Heat Fusion Polyethylene (PE) Plastic Fittings for Polyethylene (PE) Plastic Pipe and Tubing
ASTM D 3308	(1997) PTFE Resin-Skived Tape
ASTM D 3350	(1996) Polyethylene Plastics Pipe and Fittings Materials

AMERICAN SOCIETY OF MECHANICAL ENGINEERS (ASME)

ASME B16.40	(1985; R 1994) Manually Operated Thermoplastic Gas Shutoffs and Valves in Gas Distribution Systems
ASME B31.8	(1995) Gas Transmission and Distribution Piping Systems
ASME BPV VIII Div 1	(1998) Boiler and Pressure Vessel Code; Section VIII, Pressure Vessels Division 1 - Basic Coverage

CODE OF FEDERAL REGULATIONS (CFR)

49 CFR 192	Transportation of Natural and Other Gas by Pipeline: Minimum Federal Safety Standards

COMMERCIAL ITEM DESCRIPTION (CID)

CID A-A-2962	(Basic) Enamel, Alkyd (Metric)

FEDERAL SPECIFICATIONS (FS)

FS TT-E-2784	(Rev A) Enamel (Acrylic-Emulsion, Exterior Gloss and Semigloss) (Metric)

MANUFACTURERS STANDARDIZATION SOCIETY OF THE VALVE AND FITTINGS INDUSTRY (MSS)

MSS SP-25	(1998) Standard Marking System for Valves, Fittings, Flanges and Unions

NACE INTERNATIONAL (NACE)

NACE RP0185	(1996) Extruded, Polyolefin Resin Coating Systems with Soft Adhesives for Underground or Submerged Pipe

1.2 GENERAL REQUIREMENTS

1.2.2 Jointing Polyethylene and Fiberglass Piping

Piping shall be joined by performance qualified joiners using qualified procedures in accordance with AGA Manual. Manufacturer's prequalified joining procedures shall be used. Joints shall be inspected by an inspector qualified in the joining procedures being used and in accordance with AGA Manual. Joiners and inspectors shall be qualified at the jobsite by a person who has been trained and certified by the manufacturer of the pipe, to train and qualify joiners and inspectors in each joining procedure to be used on the job. Training shall include use of equipment, explanation of the procedure, and successfully

making joints which pass tests specified in AGA Manual. The Contracting Officer shall be notified at least 24 hours in advance of the date to qualify joiners and inspectors.

1.2.3 Standard Products

Materials and equipment shall be the standard products of a manufacturer regularly engaged in the manufacture of the products and shall essentially duplicate items that have been in satisfactory use for at least 2 years prior to bid opening. Asbestos or products containing asbestos shall not be used. Equipment shall be supported by a service organization that is, in the opinion of the Contracting Officer, reasonably convenient to the site. Valves, flanges, and fittings shall be marked in accordance with MSS SP-25.

1.2.4 Verification of Dimensions

The Contractor shall become familiar with all details of the work, verify all dimensions in the field, and shall advise the Contracting Officer of any discrepancy before performing the work.

1.2.5 Handling

Pipe and components shall be handled carefully to ensure a sound, undamaged condition. Particular care shall be taken not to damage pipe coating. No pipe or material of any kind shall be placed inside another pipe or fitting after the coating has been applied, except as specified in paragraph INSTALLATION. Plastic pipe shall be handled in conformance with AGA Manual.

1.3 SUBMITTALS

Government approval is required for submittals with a "GA" designation; submittals having an "FIO" designation are for information only. The following shall be submitted in accordance with Section 01330 SUBMITTAL PROCEDURES:

SD-04 Drawings

Pipe, Fittings, and Associated Materials;GA.

Drawings shall contain complete schematic and piping diagrams and any other details required to demonstrate that the system has been coordinated and will properly function as a unit. Drawings shall show proposed layout and anchorage of the system and appurtenances, and equipment relationship to other parts of the work including clearances for maintenance and operation.

SD-07 Schedules

Equipment and Materials;GA.

A complete list of equipment and materials, including manufacturer's descriptive and technical literature, performance charts and curves, catalog cuts, and installation instructions, including, but not limited to the following:

a. Dielectric Unions and Flange Kits.

b. Meters.

c. Pressure Reducing Valves.

d. Regulators.

Spare Parts Data;FIO.

Spare parts lists for each different item of material and equipment specified, after approval of the detail drawings and not later than 3 months prior to the date of beneficial occupancy. The data shall include a complete list of parts and supplies, with current unit prices and source of supply.

Notification;FIO.

Notification of the Contractor's schedule for making connections to existing gas lines, at least 10 days in advance.

SD-08 Statements

Jointing Polyethylene and Fiberglass Piping; GA.

A copy of qualified jointing procedures, training procedures, qualifications of trainer, and training test results for joiners and inspectors.

Connection and Abandonment Procedures; GA.

A copy of procedures for gas line tie in, hot taps, abandonment/removal or demolition, purging, and plugging as applicable in accordance with ASME B31.8.

SD-13 Certificates

Utility Work;FIO.

Certification from the Operating Agency/Utility Company that work for which the Utility is responsible has been completed.

Training;FIO.

A copy of each inspector's and jointer's training certificate with respective test results.

SD-19 Operation and Maintenance Manuals

Gas Distribution System;GA.

Sixcopies, in booklet form and indexed, of site specific natural gas operation and maintenance manual for each gas distribution system including system operation, system maintenance, equipment operation, and equipment maintenance manuals described below. If operation and maintenance manuals are provided in a common volume, they shall be clearly differentiated and separately indexed.

The System Operation Manual shall include but not be limited to the following:

a. Maps showing piping layout and locations of all system valves and gas line markers.

b. Step-by-step procedures required for system startup, operation, and shutdown. System components and equipment shall be indexed to the gas maps.

c. Isolation procedures and valve operations to shut down or isolate each section of the system. Valves and other system components shall be indexed to the gas maps.

d. Descriptions of Site Specific Standard Operation Procedures including permanent and temporary pipe repair procedures, system restart and test procedures for placing repaired lines back in service, and procedures for abandoning gas piping and system components.

e. Descriptions of Emergency Procedures including: isolation procedures including required valve operations with valve locations indexed to gas map, recommended emergency equipment, checklist for major emergencies and procedures for connecting emergency gas supply.

The Equipment Operation Manual shall include, but not be limited to, detail drawings, equipment data, and manufacturer supplied operation manuals for all equipment, valves and system components.

The System Maintenance Manuals shall include, but not be limited to:

a. Maintenance check list for entire gas distribution system.

b. Descriptions of site specific standard maintenance procedures.

c. Maintenance procedures for installed cathodic protection systems.

d. Piping layout, equipment layout, and control diagrams of the systems as installed.

e. Identification of pipe materials and manufacturer by location, pipe repair procedures, and jointing procedures at transitions to other piping materials or piping from different manufacturer.

The Equipment Maintenance Manuals shall include but not be limited to the following:

a. Identification of valves and other equipment by materials, manufacturer, vendor identification and location.

b. Maintenance procedures and recommended maintenance tool kits for all valves and equipment.

c. Recommended repair methods, either field repair, factory repair, or whole-item replacement for each valve component or piece of equipment or component item.

d. Routine maintenance procedures, possible breakdowns and repairs, and troubleshooting guide.

PART 2 PRODUCTS

2.1 PIPE, FITTINGS, AND ASSOCIATED MATERIALS

2.1.7 Polyethylene Pipe, Tubing, Fittings and Joints

Polyethylene pipe, tubing, fittings and joints shall conform to ASTM D 3350 and ASTM D 2513, pipe designations PE 2406 and PE 3408, rated SDR 11 or less, as specified in ASME B31.8. Pipe sections shall be marked as required by ASTM D 2513. Butt fittings shall conform to ASTM D 3261 and socket fittings shall conform to ASTM D 2683. Fittings shall match the service rating of the pipe. Minimum wall thickness shall be5.4.

2.1.10 Identification

Pipe flow markings and metal tags for each valve, meter, and regulator shall be provided as required by the Contracting Officer.

2.1.12 Gas Transition Fittings

Gas transition fittings shall be manufactured steel fittings approved for jointing steel and polyethylene or fiberglass pipe. Approved transition fittings are those that conform to AGA Manual requirements for transition fittings.

2.2 VALVES

Valves shall be suitable for shutoff or isolation service and shall conform to the following:

2.2.1 Steel Valves

Steel valves 40 mm (1-1/2 inches) and smaller installed underground shall conform to ASME B16.34, carbon steel, socket weld ends, with square wrench operator adaptor. Steel valves 40 mm (1-1/2 inches) and smaller installed aboveground shall conform to ASME B16.34, carbon steel, socket weld or threaded ends with handwheel or wrench operator. Steel valves 50 mm (2 inches) and larger installed underground shall conform to API Spec 6D, carbon steel, buttweld ends, Class 150 with square wrench operator adaptor. Steel valves 50 mm (2 inches) and larger installed aboveground shall conform to API Spec 6D, carbon steel, buttweld or flanged ends, Class 150 with handwheel or wrench operator.

2.2.2 Steel Valve Operators

Valves 200 mm (8 inches) and larger shall be provided with worm or spur gear operators, totally enclosed, grease packed, and sealed. The operators shall have Open and Closed stops and position indicators. Locking feature shall be provided where indicated. Wherever the lubricant connections are not conveniently accessible, suitable extensions for the application of lubricant shall be provided. Valves shall be provided with lubricant compatible with gas service.

2.2.3 Polyethylene Valves

Polyethylene valves shall conform to ASME B16.40. Polyethylene valves, in sizes 15 mm to 150 mm (1/2 inch to 6 inches), may be used with polyethylene distribution and service lines, in lieu of steel valves, for underground installation only.

2.3 PRESSURE REGULATORS

Regulators shall have ferrous bodies, shall provide backflow and vacuum protection, and shall be designed to meet the pressure, load and other service conditions.

2.3.2 Service Line Regulators

Pressure regulators for individual service lines shall have ferrous bodies. Regulator shall be capable of reducing distribution line pressure to pressures required for users. Regulators shall be provided where gas will be distributed at pressures in excess of 2.5 kPa (10 inches of water column). Pressure relief shall be set at a lower pressure than would cause unsafe operation of any connected user. Regulators for liquified petroleum gas shall be adjusted to 2.5 to 3 kPa (10 to 12 inches of water column). Pressure relief for liquified petroleum gas shall be set at 4 kPa (16 inches of water column). Regulator shall have single port with orifice diameter no greater than that recommended by the manufacturer for the maximum gas pressure at the regulator inlet. Regulator valve vent shall be of resilient materials designed to withstand flow conditions when pressed against the valve port. Regulator shall be capable of regulating downstream pressure within limits of accuracy and shall be capable of limiting the buildup of pressure under no-flow conditions to 50 percent or less of the discharge pressure maintained under flow conditions. Regulator shall have a self contained service regulator. Regulator pipe connections shall not exceed 50 mm (2 inch) size.

2.4 METERS

Meters shall conform to ANSI B109.2. Meters shall be pipemountedand be provided with a strainer immediately upstream. Meters shall be provided with over-pressure protection as specified in ASME B31.8 . Meters shall be suitable for accurately measuring and handling gas at pressures, temperatures, and flow rates indicated. Meters shall have a pulse switch initiator capable of operating up to speeds of 500 pulses per minute with no false pulses and shall require no field adjustments. Initiators shall provide the maximum number of pulses up to 500 per minute that is obtainable from the manufacturer. It shall provide not less than one pulse per 2.83 cubic meter (100 cubic feet) of gas.

2.7 PROTECTIVE COVERING MATERIALS

Continuously extruded polyethylene and adhesive coating system materials shall conform to NACE RP0185, Type A.

PART 3 EXECUTION

3.1 EXCAVATION AND BACKFILLING

Earthwork shall be as specified in Section 02316 EXCAVATION, TRENCHING, AND BACKFILLING FOR UTILITIES SYSTEMS.

3.2 GAS MAINS

Pipe for gas mains shall be polyethylene. Polyethylene or fiberglass mains shall not be installed aboveground.

3.3 SERVICE LINES AND EMERGENCY GAS SUPPLY CONNECTION

Service lines shall be constructed of materials specified for gas mains and shall extend from a gas main to and including the point of delivery within 1.5 meters (5 feet) of the building. The point of delivery is the meter set assembly . The service lines shall be connected to the gas mains as indicated. Where indicated, service line shall be provided with an isolation valve of the same size as the service line. The service lines shall be as short and as straight as practicable between the point of delivery and the gas main and shall not be bent or curved laterally unless necessary to avoid obstructions or otherwise permitted. Service lines shall be laid with as few joints as practicable using standard lengths of pipe. Shorter lengths shall be used only for closures. Polyethylene or fiberglass service lines shall not be installed aboveground except as permitted in ASME B31.8.

3.6 INSTALLATION

Gas distribution system and equipment shall be installed in conformance with the manufacturer's recommendations and applicable sections of ASME B31.8, AGA Manual and 49 CFR 192. Abandoning existing gas piping shall be done in accordance with ASME B31.8. Pipe shall be cut without damaging the pipe. Unless otherwise authorized, cutting shall be done by an approved type of mechanical cutter. Wheel cutters shall be used where practicable. On steel pipe 150 mm (6 inches and larger, an approved gas-cutting-and-beveling machine may be used. Cutting of plastic pipe shall be in accordance with AGA Manual. Valve installation in plastic pipe shall be designed to protect the plastic pipe against excessive torsional or shearing loads when the valve is operated and from other stresses which may be exerted through the valve or valve box.

3.6.1 Installing Pipe Underground

Gas mains and service lines shall be graded as indicated. Joints in steel pipe shall be welded except as otherwise permitted for installation of valves. Mains shall have 600 mm minimum cover; service lines shall have 485 mm minimum cover; and both mains and service lines shall be placed on firmly compacted select material for the full length. Where indicated, the main shall be encased, bridged, or designed to withstand any anticipated external loads as specified in ASME B31.8. The encasement material shall be standard weight black steel pipe with a protective coating as specified. The pipe shall be separated from the casing by insulating spacers and sealed at the ends with casing bushings. Trench shall be excavated below pipe grade, bedded with bank sand, and compacted to provide full-length

bearing. Laying the pipe on blocks to produce uniform grade will not be permitted. The pipe shall be clean inside before it is lowered into the trench and shall be kept free of water, soil, and all other foreign matter that might damage or obstruct the operation of the valves, regulators, meters, or other equipment. When work is not in progress, open ends of pipe or fittings shall be securely closed by expandable plugs or other suitable means. Minor changes in line or gradient of pipe that can be accomplished through the natural flexibility of the pipe material without producing permanent deformation and without overstressing joints may be made when approved. Changes in line or gradient that exceed the limitations specified shall be made with fittings. When cathodic protection is furnished, electrically insulated joints or flanges shall be provided. When polyethylene or fiberglass piping is installed underground, foil backed magnetic tape shall be placed above the pipe to permit locating with a magnetic detector. After laying of pipe and testing, trench shall be backfilled in accordance with Section 02316 EXCAVATION, TRENCHING, AND BACKFILLING FOR UTILITY SYSTEMS.

3.6.2 Installing Pipe Aboveground

Aboveground piping shall be protected against dirt and other foreign matter as specified for underground piping. Joints in steel pipe shall be welded; however, joints in pipe 40 mm (1-1/2 inches) in diameter and smaller may be threaded; joints may also be threaded to accommodate the installation of valves. Flanges shall be of the weld neck type to match wall thickness of pipe.

3.7 PIPE JOINTS

Pipe joints shall be designed and installed to effectively sustain the longitudinal pullout forces caused by the contraction of piping or superimposed loads.

3.7.3 Polyethylene Pipe Jointing Procedures

Jointing procedures shall conform to AGA Manual. Indiscriminate heat fusion joining of plastic pipe or fittings made from different polyethylene resins by classification or by manufacturer shall be avoided if other alternative joining procedures are available. If heat fusion joining of dissimilar polyethylenes is required, special procedures are required. The method of heat fusion joining dissimilar polyethylene resins shall be tested in accordance with paragraph TESTS, subparagraph Destructive Tests of Plastic Pipe Joints.

3.7.4 Connections Between Metallic and Plastic Piping

Connections shall be made only outside, underground, and with approved transition fittings.

3.8 VALVE BOXES

Valve boxes of cast iron not less than 4.7 mm (3/16 inch) thick shall be installed at each underground valve except where concrete or other type of housing is indicated. Valve boxes shall be provided with locking covers that require a special wrench for removal. Wrench shall be furnished for each box. The word "gas" shall be cast in the box cover. When the valve is located in a roadway, the valve box shall be protected by a suitable concrete slab at least 1 square meter. When in a sidewalk, the top of the box shall be in a concrete slab 600 mm square and set flush with the sidewalk. Boxes shall be adjustable extension type with screw or slide-type adjustments. Valve boxes shall be separately supported, not

resting on the pipe, so that no traffic loads can be transmitted to the pipe. Valves shall only be located in valve boxes or inside of buildings.

3.9 DRIPS

Drips shall be installed at locations where indicated. Drips shall conform to the details shown or may be commercial units of approved type and capacity. A blow off pipe 32 mm (1-1/4 inches) or larger shall be connected to each drip at its lowest point and shall extend to or near the ground surface at a convenient location away from traffic. Discharge for each drip terminal (outlet) shall be provided with a reducing fitting, a plug valve, and a 15 mm (1/2 inch nipple turned down. The discharge terminal (outlet) shall be inside a length of 300 mm or larger vitrified clay pipe, concrete sewer pipe or concrete terminal box set vertically on a bed of coarse gravel 300 mm thick and 1 m square, and closed at the ground surface with a suitable replacement cover.

3.10 PRESSURE REGULATOR INSTALLATION

3.10.2 Service Line Regulators

A shutoff valve, meter set assembly, and service regulator shall be installed on the service line outside the building, 450 mm above the ground on the riser. An insulating joint shall be installed on the inlet side of the meter set assembly and service regulator and shall be constructed to prevent flow of electrical current. A 10 mm (3/8 inch) tapped fitting equipped with a plug shall be provided on both sides of the service regulator for installation of pressure gauges for adjusting the regulator. All service regulator vents and relief vents shall terminate in the outside air in rain and insect resistant fittings. The open end of the vent shall be located where gas can escape freely into the atmosphere, away from any openings into the building and above areas subject to flooding.

3.11 METER INSTALLATION

Meters shall be installed in accordance with ASME B31.8. Permanent gas meters shall be installed with provisions for isolation and removal for calibration and maintenance, and shall be suitable for operation in conjunction with an energy monitoring and control system.

3.12 CONNECTIONS TO EXISTING LINES

Connections between new work and existing gas lines, where required, shall be made in accordance with ASME B31.8, using proper fittings to suit the actual conditions. When connections are made by tapping into a gas main, the connecting fittings shall be the same size as the pipe being connected.

3.14 TESTS

3.14.2 Pressure and Leak Tests

The system of gas mains and service lines shall be tested after construction and before being placed in service using air as the test medium. The normal operating pressure for the system is 68 kPA. The test pressure is 103 kPa. Prior to testing the system, the interior shall be blown out, cleaned and cleared

of all foreign materials. All meters, regulators, and controls shall be removed before blowing out and cleaning and reinstalled after clearing of all foreign materials. Testing of gas mains and service lines shall be done with due regard for the safety of employees and the public during the test. Persons not working on the test operations shall be kept out of the testing area while testing is proceeding. The test shall be made on the system as a whole or on sections that can be isolated. Joints in sections shall be tested prior to backfilling when trenches must be backfilled before the completion of other pipeline sections. The test shall continue for at least 24 hours from the time of the initial readings to the final readings of pressure and temperature. The initial test readings of the instrument shall not be made for at least 1 hour after the pipe has been subjected to the full test pressure, and neither the initial nor final readings shall be made at times of rapid changes in atmospheric conditions. The temperatures shall be representative of the actual trench conditions. There shall be no indication of reduction of pressure during the test after corrections have been made for changes in atmospheric conditions in conformity with the relationship T(1)P(2)=T(2)P(1), in which T and P denote absolute temperature and pressure, respectively, and the numbers denote initial and final readings. During the test, the entire system shall be completely isolated from all compressors and other sources of air pressure. Each joint shall be tested by means of soap and water or an equivalent nonflammable solution prior to backfilling or concealing any work. The testing instruments shall be approved by the Contracting Officer. All labor, materials and equipment for conducting the tests shall be furnished by the Contractor and shall be subject to inspection at all times during the tests. The Contractor shall maintain safety precautions for air pressure testing at all times during the tests.

END OF SECTION

This page intentionally blank

SECTION 02630

STORM-DRAINAGE SYSTEM

PART 1 GENERAL

1.1 REFERENCES

The publications listed below form a part of this specification to the extent referenced. The publications are referred to in the text by basic designation only.

AMERICAN ASSOCIATION OF STATE HIGHWAY AND TRANSPORTATION OFFICIALS (AASHTO)

AASHTO HB-16	(1996) Standard Specifications for Highway Bridges
AASHTO M 198	(1994) Joints for Circular Concrete Sewer and Culvert Pipe Using Flexible Watertight Gaskets
AASHTO M 294	(1994) Corrugated Polyethylene Pipe, 305- to 915- mm (12-to 36 in.) Diameter

AMERICAN SOCIETY FOR TESTING AND MATERIALS (ASTM)

ASTM A 48	(1994a) Gray Iron Castings
ASTM A 123/A 123M	(1997a) Zinc (Hot-Dip Galvanized) Coatings on Iron and Steel Products
ASTM A 536	(1984; R 1993) Ductile Iron Castings
ASTM B 26/B 26M	(1997) Aluminum-Alloy Sand Castings
ASTM C 231	(1997) Air Content of Freshly Mixed Concrete by the Pressure Method
ASTM C 443	(1994) Joints for Circular Concrete Sewer and Culvert Pipe, Using Rubber Gaskets
ASTM C 478	(1997) Precast Reinforced Concrete Manhole Sections
ASTM C 478M	(1997) Precast Reinforced Concrete Manhole Sections (Metric)
ASTM D 1557	(1991) Laboratory Compaction Characteristics of Soil Using Modified Effort (56,000 ft-lbf/cu. ft. (2,700 kN-m/cu.m.))

ASTM D 1751	(1983; R 1991) Preformed Expansion Joint Filler for Concrete Paving and Structural Construction (Nonextruding and Resilient Bituminous Types)
ASTM D 1752	(1984; R 1996) Preformed Sponge Rubber and Cork Expansion Joint Fillers for Concrete Paving and Structural Construction
ASTM D 1784	(1997) Rigid Poly(Vinyl Chloride) (PVC) Compounds and Chlorinated Poly(Vinyl Chloride) (CPVC) Compounds
ASTM D 2167	(1994) Density and Unit Weight of Soil in Place by the Rubber Balloon Method
ASTM D 2321	(1989; R 1995) Underground Installation of Thermoplastic Pipe for Sewers and Other Gravity-Flow Applications
ASTM D 2922	(1996) Density of Soil and Soil-Aggregate in Place by Nuclear Methods (Shallow Depth)
ASTM D 3017	(1988; R 1993) Water Content of Soil and Rock in Place by Nuclear Methods (Shallow Depth)
ASTM D 3034	(1994) Type PSM Poly(Vinyl Chloride) (PVC) Sewer Pipe and Fittings
ASTM D 3212	(1996a) Joints for Drain and Sewer Plastic Pipes Using Flexible Elastomeric Seals
ASTM D 3350	(1996) Polyethylene Plastics Pipe and Fittings Materials
ASTM F 477	(1995) Elastomeric Seals (Gaskets) for Joining Plastic Pipe
ASTM F 679	(1995) Poly(Vinyl Chloride) (PVC) Large-Diameter Plastic Gravity Sewer Pipe and Fittings
ASTM F 714	(1994) Polyethylene (PE) Plastic Pipe (SDR-PR) Based on Outside Diameter
ASTM F 794	(1995a) Poly(Vinyl Chloride) (PVC) Profile Gravity Sewer Pipe and Fittings Based on Controlled Inside Diameter
ASTM F 894	(1995) Polyethylene (PE) Large Diameter Profile Wall Sewer and Drain Pipe
ASTM F 949	(1994) Poly(Vinyl Chloride) (PVC) Corrugated Sewer Pipe with a Smooth Interior and Fittings

1.2 SUBMITTALS

Government approval is required for submittals with a "GA" designation; submittals having an "FIO" designation are for information only. The following shall be submitted in accordance with Section 01330 SUBMITTAL PROCEDURES:

SD-06 Instructions

Placing Pipe; FIO.

Printed copies of the manufacturer's recommendations for installation procedures of the material being placed, prior to installation.

SD-13 Certificates

Resin Certification; FIO. Pipeline Testing; FIO. Hydrostatic Test on Watertight Joints; FIO. Determination of Density; FIO. Frame and Cover for Gratings; FIO.

Certified copies of test reports demonstrating conformance to applicable pipe specifications, before pipe is installed. Certification on the ability of frame and cover or gratings to carry the imposed live load.

SD-14 Samples

Pipe for Culverts and Storm Drains; FIO.

1.3 DELIVERY, STORAGE, AND HANDLING

1.3.1 Delivery and Storage

Materials delivered to site shall be inspected for damage, unloaded, and stored with a minimum of handling. Materials shall not be stored directly on the ground. The inside of pipes and fittings shall be kept free of dirt and debris. Before, during, and after installation, plastic pipe and fittings shall be protected from any environment that would result in damage or deterioration to the material. The Contractor shall have a copy of the manufacturer's instructions available at the construction site at all times and shall follow these instructions unless directed otherwise by the Contracting Officer. Solvents, solvent compounds, lubricants, elastomeric gaskets, and any similar materials required to install plastic pipe shall be stored in accordance with the manufacturer's recommendations and shall be discarded if the storage period exceeds the recommended shelf life. Solvents in use shall be discarded when the recommended pot life is exceeded.

1.3.2 Handling

Materials shall be handled in a manner that ensures delivery to the trench in sound, undamaged condition. Pipe shall be carried to the trench, not dragged.

PART 2 PRODUCTS

2.1 PIPE FOR CULVERTS AND STORM DRAINS

Pipe for culverts and storm drains shall be of the sizes indicated and shall conform to the requirements specified.

2.1.1 PVC Pipe

The pipe manufacturer's resin certification, indicating the cell classification of PVC used to manufacture the pipe, shall be submitted prior to installation of the pipe.

2.1.1.1 Type PSM PVC Pipe

ASTM D 3034, Type PSM, maximum SDR 35, produced from PVC certified by the compounder as meeting the requirements of ASTM D 1784, minimum cell class 12454-B.

2.1.1.2 Profile PVC Pipe

ASTM F 794, Series 46, produced from PVC certified by the compounder as meeting the requirements of ASTM D 1784, minimum cell class 12454-B.

2.1.1.3 Smooth Wall PVC Pipe

ASTM F 679 produced from PVC certified by the compounder as meeting the requirements of ASTM D 1784, minimum cell class 12454-B.

2.1.1.4 Corrugated PVC Pipe

ASTM F 949 produced from PVC certified by the compounder as meeting the requirements of ASTM D 1784, minimum cell class 12454-B.

2.1.2 PE Pipe

The pipe manufacturer's resin certification indicating the cell classification of PE used to manufacture the pipe shall be submitted prior to installation of the pipe. The minimum cell classification for polyethylene plastic shall apply to each of the seven primary properties of the cell classification limits in accordance with ASTM D 3350.

2.1.2.1 Smooth Wall PE Pipe

ASTM F 714, maximum DR of 21 for pipes 80 to 600 mm in diameter and maximum DR of 26 for pipes 650 to 1200 mm in diameter. Pipe shall be produced from PE certified by the resin producer as meeting the requirements of ASTM D 3350, minimum cell class 335434C.

2.1.2.2 Corrugated PE Pipe

AASHTO M 294, Type S, for pipes 300 to 900 mm and AASHTO MP6, Type S or D, for pipes 1050 to 1200 mm produced from PE certified by the resin producer as meeting the requirements of ASTM D 3350, minimum cell class 315412C or 324420C. Pipe walls shall have the following properties:

Nominal Size (mm)	Minimum Wall Area (square mm/m)	Minimum Moment of Inertia of Wall Section (mm to the 4th/mm)
305	3200	390
380	4000	870
455	4900	1020
610	6600	1900
760	8300	2670
915	9500	3640
1050	9900	8900
1200	10900	8900

2.1.2.3 Profile Wall PE Pipe

ASTM F 894, RSC 160, produced from PE certified by the resin producer as meeting the requirements of ASTM D 3350, minimum cell class 334433C. Pipe walls shall have the following properties:

		Minimum Moment Of Inertia of Wall Section (mm to the 4th/mm)	
Nominal Size (mm)	Minimum Wall Area (square mm/m)	Cell Class 334433C	Cell Class 335434C
450	6300	850	620
525	8800	1150	840
600	9900	1330	970
675	12500	2050	1490
750	12500	2050	1490
825	14800	2640	2160
900	17100	3310	2700
1050	16500	4540	3720
1200	18700	5540	4540

2.2 MISCELLANEOUS MATERIALS

2.2.1 Concrete

Unless otherwise specified, concrete and reinforced concrete shall conform to the requirements for 27.6 MPa concrete under Section 03300 CAST-IN-PLACE STRUCTURAL CONCRETE. The concrete mixture shall have air content by volume of concrete, based on measurements made immediately after discharge from the mixer, of 5 to 7 percent when maximum size of coarse aggregate exceeds 37.5 mm. Air content shall be determined in accordance with ASTM C 231. The concrete covering over steel reinforcing shall not be less than 25 mm thick for covers and not less than 40 mm thick for walls and flooring. Concrete covering deposited directly against the ground shall have a thickness of at least 75 mm between steel and ground. Expansion-joint filler material shall conform to ASTM D 1751, or ASTM D 1752, or shall be resin-impregnated fiberboard conforming to the physical requirements of ASTM D 1752.

2.2.2 Precast Reinforced Concrete Manholes

Precast reinforced concrete manholes shall conform to ASTM C 478M . Joints between precast concrete risers and tops shall be full-bedded in cement mortar and shall be smoothed to a uniform surface on both interior and exterior of the structure.

2.2.3 Frame and Cover for Gratings

Frame and cover for gratings shall be cast gray iron, ASTM A 48, Class 35B; cast ductile iron, ASTM A 536, Grade 65-45-12; or cast aluminum, ASTM B 26/B 26M, Alloy 356.OT6. Weight, shape, size, and waterway openings for grates and curb inlets shall be as indicated on the plans.

2.2.4 Joints

2.2.4.1 PVC Plastic Pipes

Joints shall be solvent cement or elastomeric gasket type in accordance with the specification for the pipe and as recommended by the pipe manufacturer.

2.2.4.2 Smooth Wall PE Plastic Pipe

Pipe shall be joined using butt fusion method as recommended by the pipe manufacturer.

2.2.4.3 Corrugated PE Plastic Pipe

Water tight joints shall be made using a PVC or PE coupling and rubber gaskets as recommended by the pipe manufacturer. Rubber gaskets shall conform to ASTM F 477. Soil tight joints shall conform to the requirements in AASHTO HB-16, Division II, Section 26.4.2.4. (e) for soil tightness and shall be as recommended by the pipe manufacturer.

2.2.4.4 Profile Wall PE Plastic Pipe

Joints shall be gasketed or thermal weld type with integral bell in accordance with ASTM F 894.

2.3 STEEL LADDER

Steel ladder shall be provided where the depth of the manhole exceeds 3.66 m. These ladders shall be not less than 406 mm in width, with 19 mm diameter rungs spaced 305 mm apart. The two stringers shall be a minimum 10 mm thick and 63 mm wide. Ladders and inserts shall be galvanized after fabrication in conformance with ASTM A 123/A 123M.

2.4 DOWNSPOUT BOOTS

Boots used to connect exterior downspouts to the storm-drainage system shall be of gray cast iron conforming to ASTM A 48, Class 30B or 35B. Shape and size shall be as indicated.

2.5 HYDROSTATIC TEST ON WATERTIGHT JOINTS

2.5.1 PVC and PE Pipe

A hydrostatic test shall be made on the watertight joint types as proposed. Only one sample joint of each type needs testing; however, if the sample joint fails because of faulty design or workmanship, an additional sample joint may be tested. During the test period, gaskets or other jointing material shall be protected from extreme temperatures which might adversely affect the performance of such materials. Test requirements for joints in PVC and PE plastic pipe shall conform to ASTM D 3212.

PART 3 EXECUTION

3.1 EXCAVATION FOR PIPE CULVERTS, STORM DRAINS, AND DRAINAGE STRUCTURES

Excavation of trenches, and for appurtenances and backfilling for culverts and storm drains, shall be in accordance with the applicable portions of Section 02316 EXCAVATION, TRENCHING, AND BACKFILLING FOR UTILITIES SYSTEMS and Section 02300 EARTHWORK and the requirements specified below.

3.1.1 Trenching

The width of trenches at any point below the top of the pipe shall be not greater than the outside diameter of the pipe plus 300 mm to permit satisfactory jointing and thorough tamping of the bedding material under and around the pipe. Sheeting and bracing, where required, shall be placed within the trench width as specified. Contractor shall not overexcavate. Where trench widths are exceeded, redesign with a resultant increase in cost of stronger pipe or special installation procedures will be necessary. Cost of this redesign and increased cost of pipe or installation shall be borne by the Contractor without additional cost to the Government.

3.1.2 Removal of Rock

Rock in either ledge or boulder formation shall be replaced with suitable materials to provide a compacted earth cushion having a thickness between unremoved rock and the pipe of at least 200 mm or 13 mm for each meter of fill over the top of the pipe, whichever is greater, but not more than three-fourths the nominal diameter of the pipe. Where bell-and-spigot pipe is used, the cushion shall be

maintained under the bell as well as under the straight portion of the pipe. Rock excavation shall be as specified and defined in Section 02316 EXCAVATION, TRENCHING, AND BACKFILLING FOR UTILITIES SYSTEMS.

3.1.3 Removal of Unstable Material

Where wet or otherwise unstable soil incapable of properly supporting the pipe, as determined by the Contracting Officer, is unexpectedly encountered in the bottom of a trench, such material shall be removed to the depth required and replaced to the proper grade with select granular material, compacted as provided in paragraph BACKFILLING. When removal of unstable material is due to the fault or neglect of the Contractor in his performance of shoring and sheeting, water removal, or other specified requirements, such removal and replacement shall be performed at no additional cost to the government.

3.2 BEDDING

The bedding surface for the pipe shall provide a firm foundation of uniform density throughout the entire length of the pipe.

3.2.1 Plastic Pipe

Bedding for PVC and PE pipe shall meet the requirements of ASTM D 2321. Bedding, haunching, and initial backfill shall be either Class IB or II material.

3.3 PLACING PIPE

Each pipe shall be thoroughly examined before being laid; defective or damaged pipe shall not be used. Plastic pipe shall be protected from exposure to direct sunlight prior to laying, if necessary to maintain adequate pipe stiffness and meet installation deflection requirements. Pipelines shall be laid to the grades and alignment indicated. Proper facilities shall be provided for lowering sections of pipe into trenches. Lifting lugs in vertically elongated metal pipe shall be placed in the same vertical plane as the major axis of the pipe. Pipe shall not be laid in water, and pipe shall not be laid when trench conditions or weather are unsuitable for such work. Diversion of drainage or dewatering of trenches during construction shall be provided as necessary. Deflection of installed flexible pipe shall not exceed the following limits:

TYPE OF PIPE	MAXIMUM ALLOWABLE DEFLECTION (%)
Plastic	7.5

Not less than 30 days after the completion of backfilling, the Government may perform a deflection test on the entire length of installed flexible pipe using a mandrel or other suitable device. Installed flexible pipe showing deflections greater than those indicated above shall be retested by a run from the opposite direction. If the retest also fails, the suspect pipe shall be replaced at no cost to the Government.

3.3.1 PVC and Ribbed PVC Pipe

Laying shall proceed upgrade with spigot ends of bell-and-spigot pipe and tongue ends of tongue-and-groove pipe pointing in the direction of the flow.

3.3.2 Corrugated PE Pipe

Laying shall be with the separate sections joined firmly on a bed shaped to line and grade and shall follow manufacturer's recommendations.

3.4 DRAINAGE STRUCTURES

3.4.1 Manholes and Inlets

Construction shall be of reinforced concrete, plain concrete, brick, precast reinforced concrete, precast concrete segmental blocks, prefabricated corrugated metal, or bituminous coated corrugated metal; complete with frames and covers or gratings; and with fixed galvanized steel ladders where indicated. Pipe studs and junction chambers of prefabricated corrugated metal manholes shall be fully bituminous-coated and paved when the connecting branch lines are so treated.

3.5 STEEL LADDER INSTALLATION

Ladder shall be adequately anchored to the wall by means of steel inserts spaced not more than 1.83 m vertically, and shall be installed to provide at least 152 mm of space between the wall and the rungs. The wall along the line of the ladder shall be vertical for its entire length.

3.6 BACKFILLING

3.6.1 Backfilling Pipe in Trenches

After the pipe has been properly bedded, selected material from excavation or borrow, at a moisture content that will facilitate compaction, shall be placed along both sides of pipe in layers not exceeding 150 mm in compacted depth. The backfill shall be brought up evenly on both sides of pipe for the full length of pipe. The fill shall be thoroughly compacted under the haunches of the pipe. Each layer shall be thoroughly compacted with mechanical tampers or rammers. This method of filling and compacting shall continue until the fill has reached an elevation of at least 300 mm above the top of the pipe. The remainder of the trench shall be backfilled and compacted by spreading and rolling or compacted by mechanical rammers or tampers in layers not exceeding 150 millimeters. Tests for density shall be made as necessary to ensure conformance to the compaction requirements specified below. Where it is necessary, in the opinion of the Contracting Officer, that sheeting or portions of bracing used be left in place, the contract will be adjusted accordingly. Untreated sheeting shall not be left in place beneath structures or pavements.

3.6.2 Backfilling Pipe in Fill Sections

For pipe placed in fill sections, backfill material and the placement and compaction procedures shall be as specified below. The fill material shall be uniformly spread in layers longitudinally on both sides of the pipe, not exceeding 150 mm in compacted depth, and shall be compacted by rolling parallel with pipe

or by mechanical tamping or ramming. Prior to commencing normal filling operations, the crown width of the fill at a height of 300 mm above the top of the pipe shall extend a distance of not less than twice the outside pipe diameter on each side of the pipe or 4 m, whichever is less. After the backfill has reached at least 300 mm above the top of the pipe, the remainder of the fill shall be placed and thoroughly compacted in layers not exceeding 200 mm.

3.6.3 Movement of Construction Machinery

When compacting by rolling or operating heavy equipment parallel with the pipe, displacement of or injury to the pipe shall be avoided. Movement of construction machinery over a culvert or storm drain at any stage of construction shall be at the Contractor's risk. Any damaged pipe shall be repaired or replaced.

3.6.4 Compaction

3.6.4.1 General Requirements

Cohesionless materials include gravels, gravel-sand mixtures, sands, and gravelly sands. Cohesive materials include clayey and silty gravels, gravel-silt mixtures, clayey and silty sands, sand-clay mixtures, clays, silts, and very fine sands. When results of compaction tests for moisture-density relations are recorded on graphs, cohesionless soils will show straight lines or reverse-shaped moisture-density curves, and cohesive soils will show normal moisture-density curves.

3.6.4.2 Minimum Density

Backfill over and around the pipe and backfill around and adjacent to drainage structures shall be compacted at the approved moisture content to the following applicable minimum density, which will be determined as specified below.

a. Under paved roads, streets, parking areas, and similar-use pavements including adjacent shoulder areas, the density shall be not less than 90 percent of maximum density for cohesive material and 95 percent of maximum density for cohesionless material, up to the elevation where requirements for pavement subgrade materials and compaction shall control.

b. Under unpaved or turfed traffic areas, density shall not be less than 90 percent of maximum density for cohesive material and 95 percent of maximum density for cohesionless material.

c. Under nontraffic areas, density shall be not less than that of the surrounding material.

3.6.5 Determination of Density

Testing shall be the responsibility of the Contractor and performed at no additional cost to the Government. Testing shall be performed by an approved commercial testing laboratory or by the Contractor subject to approval. Tests shall be performed in sufficient number to ensure that specified density is being obtained. Laboratory tests for moisture-density relations shall be made in accordance with ASTM D 1557 except that mechanical tampers may be used provided the results are correlated

with those obtained with the specified hand tamper. Field density tests shall be determined in accordance with ASTM D 2167 or ASTM D 2922. When ASTM D 2922 is used, the calibration curves shall be checked and adjusted, if necessary, using the sand cone method as described in paragraph Calibration of the referenced publications. ASTM D 2922 results in a wet unit weight of soil and when using this method ASTM D 3017 shall be used to determine the moisture content of the soil. The calibration curves furnished with the moisture gauges shall be checked along with density calibration checks as described in ASTM D 3017 or ASTM D 2922. Test results shall be furnished the Contracting Officer. The calibration checks of both the density and moisture gauges shall be made at the beginning of a job on each different type of material encountered and at intervals as directed.

3.7 PIPELINE TESTING

Lines shall be tested for leakage by low pressure air or water testing or exfiltration tests, as appropriate. Low pressure air testing for vitrified clay pipes shall conform to ASTM C 828. Low pressure air testing for plastic pipe shall conform to ASTM F 1417. Testing of individual joints for leakage by low pressure air or water shall conform to ASTM C 1103M . Prior to exfiltration tests, the trench shall be backfilled up to at least the lower half of the pipe. If required, sufficient additional backfill shall be placed to prevent pipe movement during testing, leaving the joints uncovered to permit inspection. Visible leaks encountered shall be corrected regardless of leakage test results. When the water table is 600 mm or more above the top of the pipe at the upper end of the pipeline section to be tested, infiltration shall be measured using a suitable weir or other device acceptable to the Contracting Officer. An exfiltration test shall be made by filling the line to be tested with water so that a head of at least 600 mm is provided above both the water table and the top of the pipe at the upper end of the pipeline to be tested. The filled line shall be allowed to stand until the pipe has reached its maximum absorption, but not less than 4 hours. After absorption, the head shall be reestablished. The amount of water required to maintain this water level during a 2-hour test period shall be measured. Leakage as measured by the exfiltration test shall not exceed 9 mL per mm in diameter per 100 meters of pipeline per hour. When leakage exceeds the maximum amount specified, satisfactory correction shall be made and retesting accomplished. Testing, correcting, and retesting shall be made at no additional cost to the Government.

END OF SECTION

This page intentionally blank

SECTION 02722

AGGREGATE BASE COURSE

PART 1 GENERAL

1.1 REFERENCES

The publications listed below form a part of this specification to the extent referenced. The publications are referred to in the text by basic designation only.

1.1.1 AMERICAN SOCIETY FOR TESTING AND MATERIALS (ASTM)

ASTM C 29	(1991a) Unit Weight and Voids in Aggregate
ASTM C 127	(1988; R 1993) Specific Gravity and Absorption of Course Aggregate
ASTM C 128	(1993) Specific Gravity and Absorption of Fine Aggregate
ASTM C 131	(1989) Resistance to Degradation of Small-Size Coarse Aggregate by Abrasion and Impact in the Los Angeles Machine
ASTM C 136	(1995a) Sieve Analysis of Fine and Coarse Aggregates
ASTM D 75	(1987; R 1992) Sampling Aggregates
ASTM D 422	(1963; R 1990) Particle-Size Analysis of Soils
ASTM D 1556	(1990) Density and Unit Weight of Soil in Place by the Sand-Cone Method
ASTM D 1557	(1991) Laboratory Compaction Characteristics of Soil Using Modified Effort 2,700 kN-m/cu. m.
ASTM D 2167	(1994) Density and Unit Weight of Soil in Place by the Rubber Balloon Method
ASTM D 4318	(1993) Liquid Limit, Plastic Limit, and Plasticity Index of Soils
ASTM E 11	(1995) Wire-Cloth Sieves for Testing Purposes

1.3 DEFINITIONS

1.3.1 Aggregate Base

Aggregate base as used herein is well graded, durable aggregate uniformly moistened and mechanically stabilized by compaction.

1.3.2 Degree of Compaction

Degree of compaction required is expressed as a percentage of the maximum density obtained by the test procedure presented in ASTM D 1557 abbreviated hereinafter as percent laboratory maximum density.

1.4 GENERAL

The work specified herein consists of the construction of an aggregate base course. The work shall be performed in accordance with this specification and shall conform to the lines, grades, notes and typical sections shown in the plans. Sources of all materials shall be selected well in advance of the time that materials will be required in the work.

1.5 SUBMITTALS

Government approval is required for submittals with a "GA" designation; submittals having an "FIO" designation are for information only. The following shall be submitted in accordance with SECTION: SUBMITTAL PROCEDURES:

SD-01 Data

Plant, Equipment, Machines, and Tools; FIO.
List of proposed equipment to be used in performance of construction work including descriptive data.

SD-09 Reports

Sampling and Testing; GA. Field Density; FIO. Calibration curves and related test results prior to using the device or equipment being calibrated. Copies of field test results within 24 hours after the tests are performed. Certified copies of test results for approval not less than 30 days before material is required for the work.

SD-18 Records

1.7 WEATHER LIMITATIONS

Base shall not be constructed when the atmospheric temperature is less than 2 degrees C. Base shall not be constructed on subgrades that are frozen or contain frost. If the temperature falls below 2 degrees C, completed areas shall be protected against any detrimental effects of freezing.

1.8 PLANT, EQUIPMENT, MACHINES, AND TOOLS

1.8.1 General Requirements

Plant, equipment, machines, and tools used in the work shall be subject to approval and shall be maintained in satisfactory working condition at all times. Other compacting equipment may be used in lieu of that specified, where it can be demonstrated that the results are equivalent. The equipment shall be adequate and have the capability of producing the results specified.

1.8.2 Steel-Wheeled Rollers

Steel-wheeled rollers shall be the self-propelled type weighing not less than 9 metric tons, with a minimum weight of 135 kilograms per millimeter width of rear wheel. Wheels of the rollers shall be equipped with adjustable scrapers. The use of vibratory rollers is optional.

1.8.3 Pneumatic-Tired Rollers

Pneumatic-tired rollers shall have four or more tires, each loaded to a minimum of 13,600 kilograms and inflated to a minimum pressure of 1035 kPa. The loading shall be equally distributed to all wheels, and the tires shall be uniformly inflated. Towing equipment shall also be pneumatic-tired.

1.8.4 Mechanical Spreader

Mechanical spreader shall be self-propelled or attached to a propelling unit capable of moving the spreader and material truck. The device shall be steerable and shall have variable speeds forward and reverse. The spreader and propelling unit shall be carried on tracks, rubber tires, or drum-type steel rollers that will not disturb the underlying material. The spreader shall contain a hopper, an adjustable screed, and outboard bumper rolls and be designed to have a uniform, steady flow of material from the hopper. The spreader shall be capable of laying material without segregation across the full width of the lane to a uniform thickness and to a uniform loose density so that when compacted, the layer or layers shall conform to thickness and grade requirements indicated. The Contracting Officer may require a demonstration of the spreader prior to approving use in performance of the work.

1.8.5 Sprinkling Equipment

Sprinkling equipment shall consist of tank trucks, pressure distributors, or other approved equipment designed to apply controlled quantities of water uniformly over variable widths of surface.

1.8.6 Tampers

Tampers shall be of an approved mechanical type, operated by either pneumatic pressure or internal combustion, and shall have sufficient weight and striking power to produce the compaction required.

1.8.7 Straightedge

The Contractor shall furnish and maintain at the site, in good condition, one 3.05 meter straightedge for each bituminous paver, for use in the testing of the finished surface. Straightedge shall be made available for Government use. Straightedges shall be constructed of aluminum or other lightweight metal and shall

have blades of box or box-girder cross section with flat bottom reinforced to ensure rigidity and accuracy. Straightedges shall have handles to facilitate movement on pavement.

1.9 STOCKPILING MATERIALS

Materials, including approved material available from excavation and grading, shall be stockpiled in the manner and at locations designated. Before stockpiling of material, storage sites shall be cleared, and sloped to drain. Materials obtained from different sources shall be stockpiled separately.

1.10 SAMPLING AND TESTING

1.10.1 General Requirements

Sampling and testing shall be performed by an approved commercial testing laboratory. Tests shall be performed in sufficient numbers and at the locations and times directed to insure that materials and compaction meet specified requirements. Copies of test results shall be furnished to the Contracting Officer within 24 hours of completion of tests.

1.10.2 Test Results

Results shall verify that materials comply with this specification. When a material source is changed, the new material will be tested for compliance. When deficiencies are found, the initial analysis shall be repeated and the material already placed shall be retested to determine the extent of unacceptable material. All in-place unacceptable material shall be replaced or modified as directed by the Contracting Officer.

1.10.3 Sampling

Aggregate samples for laboratory tests shall be taken in accordance with ASTM D 75.

1.10.4 Sieve Analysis

Before starting work, at least one sample of material shall be tested in accordance with ASTM C 136 and ASTM D 422 on sieves conforming to ASTM E 11. After the initial test, a minimum of one analysis shall be performed for each 1000 metric tons of material placed, with a minimum of three analyses for each day's run until the course is completed.

1.10.5 Liquid Limit and Plasticity Index

One liquid limit and plasticity index shall be performed for each sieve analysis. Liquid limit and plasticity index shall be in accordance with ASTM D 4318.

1.10.6 Laboratory Density

Tests shall provide a moisture-density relationship for the aggregate. Tests shall be conducted in accordance with ASTM D 1557.

1.10.7 Weight Per Cubic Meter of Slag

Weight per cubic meter of slag shall be determined in accordance with ASTM C 29.

1.10.8 Wear Tests

Wear tests shall be performed in accordance with ASTM C 131.

PART 2 PRODUCTS

2.1 MATERIALS

2.1.1 Aggregates

Aggregates shall consist of crushed stone or slag, crushed gravel, angular sand, or other approved material. Aggregates shall be durable and sound, free from lumps of clay, organic matter, objectionable coatings, and other foreign material. Material retained on a 4.75 mm (No. 4) sieve shall be known as coarse aggregate and that passing the 4.75 mm (No. 4) sieve shall be known as binder material.

2.1.1.1 Coarse Aggregate

Only one type of coarse aggregate shall be used on the project. Coarse aggregates, consisting of angular fragments of uniform density and quality, shall have a percentage of wear not to exceed 50 percent after 500 revolutions when tested in accordance with ASTM C 131. The amount of flat and elongated particles shall not exceed 30 percent. A flat particle is one having a ratio of width to thickness greater than 3, and an elongated particle is one having a ratio of length to width greater than 3.

a. Crushed Gravel: Crushed gravel shall be manufactured from gravel particles 50 percent of which by weight are retained on the maximum size gradation sieve specified.

b. Crushed Stone: Crushed stone retained on each sieve specified shall contain at least 50 percent by weight of crushed pieces having two or more freshly fractured faces with the area of each face being at least equal to 75 percent of the smallest midsectional area of the piece. When two fractures are adjacent, the angle between the planes of the fractures must be at least 30 degrees to count as two fractured faces.

2.1.1.2 Slag

Slag shall be an air-cooled blast-furnace product having a dry unit weight of not less than 1045 kg/cubic meter.

2.1.2 Binder Material

Binder material shall consist of screenings, angular sand, or other finely divided mineral matter processed or naturally combined with the coarse aggregate. Liquid-limit and plasticity-index requirements shall apply t any component that is blended to meet the required gradation and shall also apply to the completed course. The portion of any component or of the completed course passing the 0.425 mm (No. 40) sieve shall be either nonplastic or have a liquid limit not greater than 25 and a plasticity index not greater than 5.

2.1.3 Gradation

Requirements for gradation specified shall apply to the completed base course. The aggregates shall have a 37.5 millimeter maximum size and shall be continuously graded within the following limits:

Sieve Designation	Percentage by Weight Passing Square-mesh Sieve (a) (b)		
	No. 1 or	No. 2	
37.5 mm		100	---
25 mm	60-100	100	
12.5 mm		30-65	40-70
4.75 mm		20-50	20-50
2 mm	15-40	15-40	
0.425 mm	5-25	5-25	
0.075 mm	0-5	0-5	

(a) Particles having diameters less than 0.02 millimeter shall not be in excess of 3 percent by weight of the total sample tested.

(b) The values are based on aggregates of uniform specific gravity, and the percentages passing the various sieves are subject to appropriate correction in accordance with ASTM C 127 and ASTM C 128 when aggregates of varying specific gravities are used.

2.1.4 Base Course for Sidewalks

Requirements for gradation specified for base course for sidewalks shall apply to the completed section. The aggregates shall be continuously graded within the following limits:

Sieve Designation	Percentage by Weight Passing Square-mesh Sieve
37.5 mm	100
4.75 mm	40-80
0.075 mm	0-5

PART 3 EXECUTION

3.1 GENERAL REQUIREMENTS

When the base is constructed in more than one layer, the previously constructed layer shall be cleaned of loose and foreign matter by sweeping with power sweepers or power brooms, except that hand brooms may be used in areas where power cleaning is not practicable. Adequate drainage shall be provided during the entire period of construction to prevent water from collecting or standing on the working area. Line and grade stakes shall be provided as necessary for control. Grade stakes shall be in lines parallel to the centerline of the area under construction and suitably spaced for string lining.

3.2 OPERATION OF AGGREGATE SOURCES

Aggregates shall be obtained from off-site sources.

3.3 PREPARATION OF UNDERLYING COURSE

3.3.1 General Requirements

Before constructing aggregate base course, the previously constructed underlying course shall be cleaned of foreign substances. Surface of underlying course shall meet the specified compaction and surface tolerances. Subgrade shall conform to SECTION: EARTHWORK. Subbase course shall conform to SECTION: SUBBASE COURSE. Ruts or soft, yielding spots that may appear in the underlying course, areas having inadequate compaction, and deviations of the surface from requirements specified shall be corrected. For cohesionless underlying materials containing sands, sand gravels, or any other cohesionless material in harmful quantities, the surface shall be mechanically stabilized with aggregate prior to placement of the aggregate course. Stabilization may be accomplished by mixing base course material into the underlying course and compacting by approved methods. Properly compacted material will be considered as part of the underlying course and shall meet all requirements for the underlying course. Finished underlying course shall not be disturbed by traffic or other operations and shall be maintained in a satisfactory condition until base course is placed.

3.3.2 Grade Control

Underlying material shall be excavated to sufficient depth for the required base course thickness so that the finished base course with the subsequent surface course will meet the fixed grade. Finished and completed area shall conform to the lines, grades, cross section, and dimensions indicated.

3.4 INSTALLATION

3.4.1 Mixing and Placing

Materials shall be mixed by the stationary plant, traveling plant, or road mix method and placed in such a manner as to obtain uniformity of the aggregate base course material and at a uniform optimum water content for compaction. The Contractor shall make such adjustments in mixing or placing procedures or in equipment to obtain the true grades, to minimize segregation and degradation, to reduce or accelerate loss or increase of water, and to ensure a satisfactory base course.

3.4.2 Edges of Base Course

Approved material shall be placed along edges of aggregate base course in such quantities as will compact to thickness of the course being constructed, or to the thickness of each layer in a multiple layer course, allowing in each operation at least a 300 mm width of the shoulder to be rolled and compacted simultaneously with rolling and compacting of each layer of base course.

3.4.3 Compaction

Each layer of aggregate base course shall be compacted. Water content shall be maintained at optimum. Density of compacted mixture shall be at least 100 percent of laboratory maximum density. Rolling shall begin at the outside edge of the surface and proceed to the center, overlapping on successive trips at least

one-half the width of the roller. Alternate trips of the roller shall be slightly different lengths. Speed of the roller shall be such that displacement of the aggregate does not occur. Areas inaccessible to the rollers shall be compacted with mechanical tampers, and shall be shaped and finished by hand methods.

3.4.4 Layer Thickness

Compacted thickness of the aggregate course shall be as indicated. No layer shall be in excess of 200 mm nor less than 75 mm in compacted thickness.

3.4.6 Finishing

The surface of the top layer shall be finished to grade and cross section shown. Finished surface shall be of uniform texture. Light blading during compaction may be necessary for the finished surface to conform to the lines, grades, and cross sections. Should the surface for any reason become rough, corrugated, uneven in texture, or traffic marked prior to completion, such unsatisfactory portion shall be scarified, reworked, recompacted, or replaced as directed.

3.4.6.1 Smoothness

Surface of each layer shall show no deviations in excess of 9.5 mm when tested with the 3.05 meter straightedge. Deviations exceeding this amount shall be corrected by removing material and replacing with new material, or by reworking existing material and compacting, as directed.

3.4.6.2 Thickness Control

Compacted thickness of the base course shall be within 7 mm of the thickness indicated. Where the measured thickness is more than 7 mm deficient, such areas shall be corrected by scarifying, adding new material of proper gradation, reblading, and recompacting as directed. Where the measured thickness is more than 7 mm thicker than indicated, the course shall be considered as conforming to the specified thickness requirements. Average job thickness shall be the average of all thickness measurements taken for the job, but shall be within 7 mm of the thickness indicated.

3.5 FIELD QUALITY CONTROL

3.5.1 Field Density

Field in-place density shall be determined in accordance with ASTM D 1556 or ASTM D 2167.

3.5.2 Smoothness

Measurements for deviation from grade and cross section shown shall be taken in successive positions parallel to the road centerline with a 3.05 meter straightedge. Measurements shall also be taken perpendicular to the road centerline at 15 meter intervals.

3.5.3 Thickness

Thickness of the base course shall be measured at intervals in such a manner as to ensure one measurement for each 500 square meters of base course. Measurements shall be made in 75 mm diameter test holes penetrating the base course.

3.6 TRAFFIC

Completed portions of the area may be opened to traffic, provided there is no marring or distorting of the surface by the traffic. Heavy equipment shall not be permitted except when necessary to construction, and then the area shall be protected against marring or damage to the completed work.

3.7 MAINTENANCE

The aggregate base course shall be maintained in a satisfactory condition until accepted. Maintenance shall include immediate repairs to any defects and shall be repeated as often as necessary to keep the area intact.

3.8 DISPOSAL OF UNSATISFACTORY MATERIALS

Removed in-place materials that are unsuitable for the base course material that is removed for the required correction of defective areas, and waste material and debris shall be disposed of off site.

END OF SECTION

This page intentionally blank

SECTION 02741

BITUMINOUS PAVING FOR ROADS, STREETS AND OPEN STORAGE AREAS

PART 1 GENERAL

1.1 REFERENCES

The publications listed below form a part of this specification to the extent referenced. The publications are referred to in the text by basic designation only.

1.1.1 AMERICAN SOCIETY FOR TESTING AND MATERIALS (ASTM)

ASTM C 29	(1991a) Unit Weight and Voids in Aggregate
ASTM C 88	(1990) Soundness of Aggregates by Use of Sodium Sulfate or Magnesium Sulfate
ASTM C 117	(1990) Materials Finer than 75-micrometer (No 200) Sieve in Mineral Aggregates by Washing
ASTM C 127	(1988) Specific Gravity and Absorption of Coarse Aggregate
ASTM C 128	(1988) Specific Gravity and Absorption of Fine Aggregate
ASTM C 131	(1989) Resistance to Degradation of Small-Size Coarse Aggregate by Abrasion and Impact in the Los Angeles Machine
ASTM C 136	(1984a) Sieve Analysis of Fine and Coarse Aggregates
ASTM C 183	(1988) Sampling and the Amount of Testing of Hydraulic Cement
ASTM D 5	(1986) Penetration of Bituminous Materials
ASTM D 75	(1987) Sampling Aggregates
ASTM D 140	(1988) Sampling Bituminous Materials
ASTM D 242	(1985; R 1990) Mineral Filler for

	Bituminous Paving Mixtures
ASTM D 422	(1963; R 1990) Particle-Size Analysis of Soils
ASTM D 946	(1982) Penetration-Graded Asphalt Cement for Use in Pavement Construction
ASTM D 1250	(1980; R 1990) Petroleum Measurement Tables
ASTM D 1856	(1979; R 1984) Recovery of Asphalt from Solution by Abson Method
ASTM D 2041	(1991) Theoretical Maximum Specific Gravity and Density of Bituminous Paving Mixtures
ASTM D 2172	(1992) Quantitative Extraction of Bitumen from Bituminous Paving Mixtures
ASTM D 2216	(1990) Laboratory Determination of Water (Moisture) Content of Soil, and Rock
ASTM D 3381	(1983) Viscosity-Graded Asphalt Cement for Use in Pavement Construction
ASTM D 3515	(1989) Hot-Mixed, Hot-Laid Bituminous Paving Mixtures
ASTM D 4791	(1989) Flat or Elongated Particles in Coarse Aggregate
CRD C 649	(1995) Standard Test Method for Unit Weight, Marshall Stability, and Flow of Bituminous Mixtures
CRD C 650	(1995) Standard Test Method for Density and Percent Voids in Compacted Bituminous Paving Mixtures
CRD C 651	(1995) Standard Gyratory Testing Machine Method for Design of Hot-Mix Bituminous Pavement Mixtures
CRD C 652	(1995) Standard Test Method for Measurement of Reduction in Marshall Stability of Bituminous Mixtures Caused by Immersion in Water

1.3 SUBMITTALS

Government approval is required for submittals with a "GA" designation; submittals having an "FIO" designation are for information only. The following shall be submitted in accordance with SECTION: SUBMITTAL PROCEDURES:

SD-09 Reports

Bituminous Pavement; GA.

Copies of test results.

SD-14 Samples

Bituminous Pavement; GA.

Samples of the materials in the quantities indicated below for the job mix formula.

Aggregate and mineral filler (if needed) to be blended in approximately the same proportions as used in the project	100 kg
Asphalt Cement	20 liters

Aggregate samples when new sources are developed, with a plan for operation, 30 days before starting production. Samples of the asphalt cement specified, not less than 30 days before production.

SD-18 Records

Waybills and Delivery Tickets; FIO.

Waybills and delivery tickets, during progress of the work.

1.4 PLANT, EQUIPMENT, MACHINES, AND TOOLS

1.4.1 General

The bituminous plant shall be of such capacity to produce the quantities of bituminous mixtures required. Hauling equipment, paving machines, rollers, miscellaneous equipment, and tools shall be provided in sufficient numbers and capacity and in proper working condition to place the bituminous paving mixtures at a rate equal to the plant output.

1.4.2 Mixing Plants

The mixing plant shall be an automatic or semiautomatic controlled commercially manufactured unit designed and operated to consistently produce a mixture within the job-mix formula (JMF). The plant shall have a minimum capacity of 100 metric tons (tons) per hour. Drum mixers shall be prequalified at the

production rate to be used during actual mix production. The prequalification tests will include extraction and recovery of the asphalt cement in accordance with ASTM D 2172 and ASTM D 1856. The penetration of the recovered asphalt binder shall not be less than 60 percent of the original penetration, as measured in accordance with ASTM D 5.

1.4.3 Straightedge

The Contractor shall furnish and maintain at the site, in good condition, one 3.66 m straightedge for each bituminous paver. Straightedge shall be made available for Government use. Straightedges shall be constructed of aluminum or other lightweight metal and shall have blades of box or box-girder cross section with flat bottom reinforced to insure rigidity and accuracy. Straightedges shall have handles to facilitate movement on pavement.

1.5 WEATHER LIMITATIONS

Unless otherwise directed, bituminous courses shall not be constructed when temperature of the surface of the existing pavement or base course is below 5 degrees C.

1.6 PROTECTION OF PAVEMENT

After final rolling, no vehicular traffic of any kind shall be permitted on the pavement until the pavement has cooled to 60 degrees C.

1.7 GRADE AND SURFACE-SMOOTHNESS REQUIREMENTS

Finished surface of bituminous courses, when tested as specified below and in paragraph ACCEPTABILITY OF WORK, shall conform to gradeline and elevations shown and to surface-smoothness requirements specified.

1.7.1 Plan Grade

The grade of the completed surface shall not deviate more than 15.2 mm from the plan grade.

1.7.2 Surface Smoothness

When a 3.66 m straightedge is laid on the surface parallel with the centerline of the paved area or transverse from crown to pavement edge, the surface shall vary not more than 6.4 mm from the straightedge.

1.8 GRADE CONTROL

Lines and grades shall be established and maintained by means of line and grade stakes placed at site of work in accordance with the SPECIAL CLAUSES. Elevations of bench marks used by the Contractor for controlling pavement operations at the site of work will be determined, established, and maintained by the Government. Finished pavement elevations shall be established and controlled at the site of work by the Contractor in accordance with bench mark elevations furnished by the Contracting Officer.

1.9 SAMPLING AND TESTING

1.9.1 Aggregates

1.9.1.1 General

Samples of aggregates shall be taken by the Contractor prior to the start of production for aggregate quality tests and mix design. Unless otherwise directed, ASTM D 75 shall be used in sampling coarse and fine aggregate, and ASTM C 183 shall be used in sampling mineral filler. All tests necessary to determine compliance with requirements specified herein will be made by the Contractor.

1.9.1.2 Sources

Sources of aggregates shall be selected well in advance of the time the materials are required in the work. Test reports shall be submitted before starting production, indicating that aggregates meet all quality requirements specified herein. Approval of the source of aggregate does not relieve the Contractor of responsibility for delivery at the jobsite of aggregates that meet the requirements specified herein.

1.9.2 Bituminous Materials

Samples of bituminous materials shall be obtained by the Contractor; sampling shall be in accordance with ASTM D 140. Optional tests necessary to determine conformance with requirements specified herein may be performed by the Government without cost to the Contractor. Sources where bituminous materials are obtained shall be selected in advance of the time when materials will be required in the work. In addition to initial qualification testing of bituminous materials, samples shall be taken before and during construction when shipments of bituminous materials are received or when necessary to assure some condition of handling or storage has not been detrimental to the bituminous material. The samples will be taken by the Contractor and tested by the Contracting Officer.

1.9.3 Bituminous Mixtures

Sampling and testing of bituminous mixtures will be accomplished by the Contracting Officer.

1.10 DELIVERY, STORAGE, AND HANDLING OF MATERIALS

1.10.1 Mineral Aggregates

Mineral aggregates shall be delivered to the site of the bituminous mixing plant and stockpiled in such manner as to preclude fracturing of aggregate particles, segregation, contamination, or intermingling of different materials in the stockpiles or cold-feed hoppers. Mineral filler shall be delivered, stored, and introduced into the mixing plant in a manner to preclude exposure to moisture or other detrimental conditions.

1.10.2 Bituminous Materials

Bituminous materials shall be maintained at appropriate temperature during storage but shall not be heated by application of direct flame to walls of storage tanks or transfer lines. Storage tanks, transfer lines, and weigh buckets shall be thoroughly cleaned before a different type or grade of bitumen is introduced into

the system. The asphalt cement shall be heated sufficiently to allow satisfactory pumping of the material; however, the storage temperature shall be maintained below 150 degrees C.

1.11 ACCESS TO PLANT AND EQUIPMENT

The Contracting Officer shall have access at all times to all parts of the paving plant for checking adequacy of the equipment in use; inspecting operation of the plant; verifying weights, proportions, and character of materials; and checking temperatures maintained in preparation of the mixtures.

1.12 WAYBILLS AND DELIVERY TICKETS

Before the final statement is allowed, the Contractor shall file with the Contracting Officer certified waybills and certified delivery tickets for all aggregates and bituminous materials actually used in construction.

PART 2 PRODUCTS

2.1 BITUMINOUS HOT MIX

Shall consist of coarse aggregate, fine aggregate, mineral filler, bituminous material, and approved additives, if required, of the qualities and in the proportions specified and shall conform to the requirements contained in paragraphs PROPORTIONING OF MIXTURE and ACCEPTABILITY OF WORK.

2.1.1 Aggregates

Aggregates shall consist of crushed stone, crushed gravel, crushed slag, screening, sand, and mineral filler, as required. The portion of materials retained on the 4.75 mm (No. 4) sieve shall be known as coarse aggregate, the portion passing the 4.75 mm (No. 4) sieve and retained on the 0.075 millimeter (No. 200) sieve as fine aggregate, and the portion passing the 0.075 millimeter (No. 200) sieve as mineral filler. Aggregate gradation shall conform to gradation(s) specified in TABLE I. TABLE I is based on aggregates of uniform specific gravity; the percentage passing various sieves may be changed by the Contractor if approved by the Contracting Officer when aggregates of varying specific gravities are used. Adjustments of percentage passing various sieves may be changed by the Contractor if approved by the Contracting Officer when aggregates vary by more than 0.2 in specific gravity.

TABLE I. AGGREGATE GRADATION

Montana (Malmstrom AFB Only)

16 mm	100
9.5 mm	77-95
4.75 mm	57-75
2.00 mm	32-48
425 µm	15-28
150 µm	7-19
75 µm	3-7

2.1.1.1 Coarse Aggregate

Coarse aggregate shall consist of clean, sound, durable particles meeting the following requirements.

a. Percentage of loss shall not exceed 40 after 500 revolutions, as determined in accordance with ASTM C 131.

b. Percentage of loss shall not exceed 18 after five cycles performed in accordance with ASTM C 88, using magnesium sulfate.

c. The dry weight of crushed slag shall not be less than 1200 kg/cubic m, as determined in accordance with ASTM C 29.

d. Crushed gravel retained on the 4.75 mm (No. 4) sieve and each coarser sieve shall contain at least 75 percent by weight of crushed pieces having one or more fractured faces with the area of each face equal to at least 75 percent of the smallest midsectional area of piece. When two fractures are contiguous, the angle between planes of fractures shall be at least 30 degrees to count as two fractured faces.

e. Particle shape of crushed aggregates shall be essentially cubical. The quantity of flat and elongated particles in any sieve size shall not exceed 20 percent by weight, when determined in accordance with ASTM D 4791.

2.1.1.2 Fine Aggregate

Fine aggregate shall consist of clean, sound, durable particles including natural sand or crushed stone, slag, or gravel that meets requirements for wear and soundness specified for coarse aggregate. Fine aggregate produced by crushing gravel shall have at least 90 percent by weight of crushed particles having two or more fractured faces in the portion retained on the 0.600 millimeter (No. 30) sieve. This requirement shall apply to the material before blending with natural sand when blending is necessary. Quantity of natural sand to be added to the wearing- and intermediate-course mixtures shall not exceed 25 percent by weight of coarse and fine aggregate and material passing the 0.075 millimeter (No. 200) sieve. Natural sand shall be clean and free from clay and organic matter. Percentage of loss shall not exceed 15 after five cycles of the soundness test performed in accordance with ASTM C 88, using magnesium sulfate.

Bituminous Material

Asphalt cement shall conform to ASTM D 946, penetrating grade 85-100 or 120-150.

2.1.3 Additives

The use of additives such as antistripping and antifoaming agents is subject to approval.

2.2 PROPORTIONING OF MIXTURE

2.2.1 Job Mix Formula

The Job-Mix Formula shall be developed by the Contractor using CRD C651 using Marshall Mix Design 50 blow criteria. The mix design shall meet the test requirements presented in this section and shall show the following:

a. Graphical Plots for a minimum of 4 asphalt contents for

Stability	vs. A/C content
Unit wt. Mix	vs. A/C content
Percent Total Voids Filled	vs. A/C content
Percent Voids, Total Mix	vs. A/C content
Flow	vs. A/C content

The optimum asphalt content shall be calculated by averaging the peaks of curves 1 thru 4 and the stability, flow, and voids must fall within criteria specified in paragraph: Test Properties of Bituminous Mixtures.

b. The percentage and specific gravity of each bin fraction of aggregate (this will be used to determine the theoretical specific gravity).

c. Absorption of the entire blend.

d. Specific gravity of the asphalt.

e. Reduction in Stability by Immersion.

Previously established test results will be accepted provided that the tests were performed within the last 2 years and conform to requirements specified above. The job-mix-formula will be allowed tolerances given in Table II herein.

TABLE II. JOB-MIX TOLERANCES

Material	Tolerance, Plus or Minus
Aggregate passing 4.75 mm sieve or larger	5 percent
Aggregate passing 2.36, 1.18, 0.6, and 0.3 mm sieves	4 percent
Aggregate passing 150 and 75 micrometer sieves	2 percent
Bitumen	0.25 percent
Temperature of mixing	14 degrees C

2.2.2 Test Properties of Bituminous Mixtures

Finished mixture shall meet requirements described below when tested in accordance with CRD C649 and CRD 650. All samples will be compacted with 50 blows of specified hammer on each side of sample. When bituminous mixture fails to meet the requirements specified below, the paving operation shall be stopped until the cause of noncompliance is determined and corrected.

2.2.2.1 Stability, Flow, and Voids

Requirements for stability, flow, and voids are shown in TABLES III and IV for nonabsorptive and absorptive aggregates, respectively.

TABLE III. NONABSORPTIVE-AGGREGATE MIXTURE

Stability minimum, newtons	2200
Flow maximum, 25/100-millimeter units	20
Voids total mix, percent (1)	3-5
Voids filled with bitumen, percent (2)	75-85

TABLE IV. ABSORPTIVE-AGGREGATE MIXTURE

Stability minimum, newtons	2200
Flow maximum, 25/100-millimeter units	20
Voids total mix, percent (1)	2-4
Voids filled with bitumen, percent (2)	80-90

(1) The Contracting Officer may permit deviations from limits specified when gyratory method of design is used to develop the JMF.

(2) The Contracting Officer may permit deviation from limits specified for voids filled with bitumen in the intermediate course in order to stay within limits for percent voids total mix.

a. When the water-absorption value of the entire blend of aggregate does not exceed 2.5 percent as determined in accordance with ASTM C 127 and ASTM C 128, the aggregate is designated as nonabsorptive. The theoretical specific gravity computed from the apparent specific gravity or ASTM D 2041 will be used in computing voids total mix and voids filled with bitumen, and the mixture shall meet requirements in TABLE III.

b. When the water-absorption value of the entire blend of aggregate exceeds 2.5 percent as determined in accordance with ASTM C 127 and ASTM C 128, the aggregate is designated as absorptive. The theoretical specific gravity computed from the bulk-impregnated specific gravity method contained in MIL-STD-620, Method 105, or ASTM D 2041 shall be used in computing percentages of voids total mix and voids filled with bitumen; the mixture shall meet requirements in TABLE IV.

2.2.2.2 Stability

The index of retained stability must be greater than 75 percent as determined by CRD C652. When the index of retained stability is less than 75, the aggregate stripping tendencies may be countered by the use

of hydrated lime or by treating the bitumen with an approved antistripping agent. The hydrated lime is considered as mineral filler and should be considered in the gradation requirements. The amount of hydrated lime or antistripping agent added to bitumen shall be sufficient, as approved, to produce an index of retained stability of not less than 75 percent. No additional payment will be made to the Contractor for addition of antistripping agent required.

2.3 Tack Coat Materials

Emulsified asphalt for tack coat materials shall conform to ASTM D 977 and D 2397 grades RS-1, SS-1, SS-1h, CRS-1, CSS-1, or CSS-1h.

PART 3 EXECUTION

3.1 BASE COURSE CONDITIONING

The surface of the base course will be inspected for adequate compaction and surface tolerances specified in SECTION: AGGREGATE BASE COURSE. Unsatisfactory areas shall be corrected.

3.3 PREPARATION OF BITUMINOUS MIXTURES

Rates of feed of aggregates shall be regulated so that the moisture content and temperature of aggregates will be within specified tolerances. Aggregates, mineral filler, and bitumen shall be conveyed into the mixer in proportionate quantities required to meet the JMF. Mixing time shall be as required to obtain a uniform coating of the aggregate with the bituminous material. Temperature of bitumen at time of mixing shall not exceed 150 degrees C. Temperature of aggregate and mineral filler in the mixer shall not exceed 160 degrees C when bitumen is added. Overheated and carbonized mixtures or mixtures that foam shall not be used.

3.4 WATER CONTENT OF AGGREGATES

Drying operations shall reduce the water content of mixture to less than 0.75 percent. The water content test will be conducted in accordance with ASTM D 2216; the weight of the sample shall be at least 500 grams. If the water content is determined on hot bin samples, the water content will be a weighted average based on composition of blend.

3.5 STORAGE OF BITUMINOUS PAVING MIXTURE

Storage shall conform to the applicable requirements of ASTM D 3515; however, in no case shall the mixture be stored for more than 4 hours.

3.6 TRANSPORTATION OF BITUMINOUS MIXTURE

Transportation from paving plant to site shall be in trucks having tight, clean, smooth beds lightly coated with an approved releasing agent to prevent adhesion of the mixture to the truck bodies. Excessive releasing agent shall be drained prior to loading. Each load shall be covered with canvas or other approved material of ample size to protect mixture from weather and to prevent loss of heat. Loads that have crusts of cold, unworkable material or that have become wet will be rejected. Hauling over freshly placed material will not be permitted.

3.7 SURFACE PREPARATION OF UNDERLYING COURSE

Prior to placing of the intermediate or wearing course, the underlying course shall be cleaned of all foreign or objectionable matter with power brooms and hand brooms.

3.8 (NOT USED)

3.9 TACK COATING

Contact surfaces of previously constructed pavement, curbs, manholes, and other structures shall be sprayed with a tack coat.

3.9.1 Rate of Application

Bituminous material for the tack coat shall be applied in quantities of not less than 0.20 liter nor more than 0.70 liter per square meter of pavement surface.

3.9.2 Application

Following preparation and subsequent inspection of the surface, a tack coat shall be applied at the specified rate with uniform distribution over the surface to be treated. Following application of the tack coat and prior to application of the pavement, the material shall be allowed to cure (all moisture must be allowed to evaporate out of the emulsion). The tacked area shall be maintained by protecting the surface against damage and by repairing and retacking deficient areas at no additional cost to the Government. No more tack coat material shall be placed than can be covered in the same day. If required, clean, dry sand shall be spread to effectively blot up excess bituminous material.

3.10 PLACING

Bituminous courses shall be constructed only when the base course or existing pavement has no free water on the surface. Bituminous mixtures shall not be placed without ample time to complete spreading and rolling during daylight hours, unless approved satisfactory artificial lighting is provided.

3.10.1 Offsetting Joints

The wearing course shall be placed so that longitudinal joints of the wearing course will be offset from joints in the intermediate course by at least 300 mm . Transverse joints in the wearing course shall be offset by at least 600 mm from transverse joints in the intermediate course.

3.10.2 General Requirements for Use of Mechanical Spreader

Range of temperatures of mixtures, when dumped into the mechanical spreader, shall be as determined by the Contractor as approved by the Contracting Officer. Mixtures having temperatures less than 110 degrees C when dumped into the mechanical spreader shall not be used. The mechanical spreader shall be adjusted and the speed regulated so that the surface of the course being laid will be smooth and continuous without tears and pulls, and of such depth that, when compacted, the surface will conform to the cross section indicated. Placing with respect to center line areas with crowned sections or high side of

areas with one-way slope shall be as directed. Each lot of material placed shall conform to requirements specified in paragraph ACCEPTABILITY OF WORK. Placing of the mixture shall be as nearly continuous as possible, and speed of placing shall be adjusted, as directed, to permit proper rolling. When segregation occurs in the mixture during placing, the spreading operation shall be suspended until the cause is determined and corrected.

3.10.3 Placing Strips Succeeding Initial Strips

In placing each succeeding strip after initial strip has been spread and compacted as specified below, the screed of the mechanical spreader shall overlap the previously placed strip 50 to 75 mm and be sufficiently high so that compaction produces a smooth dense joint. Mixture placed on the edge of a previously placed strip by the mechanical spreader shall be pushed back to the edge of the strip by use of a lute. Excess mixture shall be removed and wasted.

3.10.4 Handspreading in Lieu of Machine Spreading

In areas where the use of machine spreading is impractical, the mixture shall be spread by hand. Spreading shall be in a manner to prevent segregation. The mixture shall be spread uniformly with hot rakes in a loose layer of thickness that, when compacted, will conform to required grade, density, and thickness.

3.11 COMPACTION OF MIXTURE

Rolling shall begin as soon after placing as the mixture will bear a roller without undue displacement. Delays in rolling freshly spread mixture will not be permitted. After initial rolling, preliminary tests of crown, grade, and smoothness shall be made by the Contractor. Deficiencies shall be corrected so that the finished course will conform to requirements for grade and smoothness specified herein. Crown, grade, and smoothness will be checked in each lot of completed pavement by the Contracting Officer for compliance and will be evaluated as specified in paragraph ACCEPTABILITY OF WORK. After the Contractor is assured of meeting crown, grade, and smoothness requirements, rolling shall be continued until a mat density of 97.0 to 100.0 percent and a joint density of 95.0 to 100.0 percent of density of laboratory-compacted specimens of the same mixture is obtained. The density will be determined and evaluated as specified in paragraph ACCEPTABILITY OF WORK. Places inaccessible to rollers shall be thoroughly compacted with hot hand tampers.

3.11.1 Testing of Mixture

At the start of the plant operation, a quantity of mixture shall be prepared that is sufficient to construct a test section at least 15 m long, two spreader widths wide and of thickness to be used in the project. Mixture shall be placed, spread, and rolled with equipment to be used in the project and in accordance with the requirements specified above. This test section shall be tested and evaluated as a lot and shall conform to all specified requirements. If test results are satisfactory, the test section shall remain in place as part of the completed pavement. If tests indicate that the pavement does not conform to specification requirements, necessary adjustments to plant operations and rolling procedures shall be made immediately, and test section will be evaluated as specified in paragraph ACCEPTABILITY OF WORK. Additional

test sections, as directed, shall be constructed and sampled for conformance to specification requirements. In no case shall the Contractor start full production of an intermediate or wearing course mixture without approval.

3.11.2 Correcting Deficient Areas

Mixtures that become contaminated or are defective shall be removed to the full thickness of the course. Edges of the area to be removed shall be cut so that sides are perpendicular and parallel to the direction of traffic and so that the edges are vertical. Edges shall be sprayed with bituminous materials conforming to Paragraph: TACK COAT. Fresh paving mixture shall be placed in the excavated areas in sufficient quantity so that the finished surface will conform to grade and smoothness requirements. Paving mixture shall be compacted to the density specified herein. Skin patching of an area that has been rolled shall not be permitted.

3.12 JOINTS

3.12.1 General

Joints between old and new pavements, between successive work days, or joints that have become cold (less than 80 degrees C shall be made to insure continuous bond between the old and new sections of the course. All joints shall have the same texture and smoothness as other sections of the course. Contact surfaces of previously constructed pavements coated by dust, sand, or other objectionable material shall be cleaned by brushing or shall be cut back as directed. When directed by the Contracting Officer, the surface against which new material is placed shall be sprayed with a thin, uniform coat of bituminous material conforming to Paragraph: TACK COAT. Material shall be applied far enough in advance of placement of a fresh mixture to insure adequate curing. Care shall be taken to prevent damage or contamination of the sprayed surface.

3.12.2 Transverse Joints

The roller shall pass over the unprotected end of a strip of freshly placed material only when placing is discontinued or delivery of the mixture is interrupted to the extent that the material in place may become cold. In all cases, prior to continuing placement, the edge of previously placed pavement shall be cut back to expose an even vertical surface for full thickness of the course. In continuing placement of a strip, the mechanical spreader shall be positioned on the transverse joint so that sufficient hot mixture will be spread to obtain a joint after rolling that conforms to the required density and smoothness specified herein.

3.12.3 Longitudinal Joints

Edges of a previously placed strip shall be prepared such that the pavement in and immediately adjacent to the joint between this strip and the succeeding strip meets the requirements for grade, smoothness, and density specified in paragraph ACCEPTABILITY OF WORK.

3.13 ACCEPTABILITY OF WORK

3.13.1 General

A lot shall be that quantity of construction that will be evaluated for compliance with specification requirements. A lot shall be equal to one days production. The Contractor shall perform all tests as specified herein at the frequency specified in SECTION: CONTRACTOR QUALITY CONTROL.

3.13.1.1 Lot Evaluation

Each lot shall be evaluated for gradation, asphalt content, density, and surface smoothness.

3.13.1.2 Lot Failure

When a lot of material fails to meet the specification requirements, that lot shall be removed and replaced. Additional tests required to determine acceptability of nonconforming material will be preformed by the Government at the expense of the Contractor.

3.13.2 Aggregate Gradation

The aggregate gradation shall fall within the job mix tolerances specified in Table II.

3.13.3 Asphalt Content

The asphalt content must be within 0.30 percent of the job mix formula. Asphalt content shall be determined in accordance with ASTM D 2172, Method A or B.

3.13.4 Density

The average mat and joint densities will be expanded as a percentage of the laboratory density. The laboratory density for each lot will be determined in accordance with CRD C649.

3.13.5 Field Density

The field density shall be determined and the average mat and joint density shall be 95 percent compacted specimens of the same mixture.

3.13.6 Grade

Grade-conformance tests will be conducted by the Contractor. The finished surface of the pavement will be tested for conformance with plan-grade requirements. Within 5 working days after completion of placement of a particular lot, the Contractor will inform the Contracting Officer in writing of results of grade-conformance tests. The finished grade of each pavement area shall be determined by running lines of levels at intervals of 8 m or less longitudinally and transversely to determine the elevation of the completed pavement. When more than 5 percent of all measurements made within a lot are outside the tolerances specified in paragraph GRADE AND SURFACE-SMOOTHNESS REQUIREMENTS, or in areas where the grade exceeds the plan-grade tolerances given in paragraph GRADE AND SURFACE-SMOOTHNESS REQUIREMENTS by more than 50 percent, the Contractor shall remove the deficient area and replace with fresh paving mixture at no additional cost to the Government. Sufficient material

shall be removed to allow at least 1 inch of asphalt concrete to be placed. Skin patching for correcting low areas or planing for correcting high areas shall not be permitted.

3.13.7 Surface Smoothness

After completion of final rolling of a lot, the compacted surface will be tested by the Contractor in the presence of a Contracting Officer with a 3.66 m straightedge. Measurements will be made perpendicular to and across all mats at distances along the mat not to exceed 8 m. Location and deviation from straightedge of all measurements will be recorded. Any joint or mat area surface deviation which exceeds the tolerance given in paragraph "GRADE AND SURFACE-SMOOTHNESS REQUIREMENTS" by more than 50 percent shall be corrected to meet the specification requirements. The Contractor shall remove the deficient area and replace with fresh paving mixture at no additional cost to the Government. Sufficient material shall be removed to allow at least 25 mm of asphalt concrete to be placed. Skin patching for correcting low areas or planing for correcting high areas shall not be permitted.

3.13.8 Optional Sampling and Testing

The Contracting Officer reserves the right to sample and test any area which appears to deviate from the specification requirements

END OF SECTION

This page intentionally blank

SECTION 02763

PAVEMENT MARKINGS

PART 1 GENERAL

1.1 SUBMITTALS

Government approval is required for submittals with a "GA" designation; submittals having an "FIO" designation are for information only. The following shall be submitted in accordance with Section 01330 SUBMITTAL PROCEDURES:

SD-01 Data

Equipment Lists; GA.

Lists of proposed equipment, including descriptive data, and notifications of proposed Contractor actions as specified in this section. List of removal equipment shall include descriptive data indicating area of coverage per pass, pressure adjustment range, tank and flow capacities, and safety precautions required for the equipment operation.

SD-06 Instructions

Mixing, Thinning and Application; FIO.

Manufacturer's current printed product description and Material Safety Data Sheets (MSDS) for each type paint/color proposed for use.

SD-09 Reports

Material Tests; FIO.

Certified copies of the test reports, prior to the use of the materials at the jobsite. Testing shall be performed in an approved independent laboratory.

SD-13 Certificates

Volatile Organic Compound (VOC) Content; FIO.

Certificate stating that the proposed pavement marking paint meets the VOC regulations of the local Air Pollution Control District having jurisdiction over the geographical area in which the project is located.

1.2 DELIVERY AND STORAGE

All materials shall be delivered and stored in sealed containers that plainly show the designated name, formula or specification number, batch number, color, date of manufacture, manufacturer's name, and directions, all of which shall be plainly legible at time of use.

1.3 EQUIPMENT

All machines, tools and equipment used in the performance of the work shall be approved and maintained in satisfactory operating condition. Equipment operating on roads and runways shall display low speed traffic markings and traffic warning lights.

1.3.1 Paint Application Equipment

The equipment to apply paint to pavements shall be a self-propelled or mobile-drawn pneumatic spraying machine with suitable arrangements of atomizing nozzles and controls to obtain the specified results. The machine shall have a speed during application not less than 8 kilometers per hour, and shall be capable of applying the stripe widths indicated, at the paint coverage rate specified in paragraph APPLICATION, and of even uniform thickness with clear-cut edges. The paint applicator shall have paint reservoirs or tanks of sufficient capacity and suitable gauges to apply paint in accordance with requirements specified. Tanks shall be equipped with suitable air-driven mechanical agitators. The spray mechanism shall be equipped with quick-action valves conveniently located, and shall include necessary pressure regulators and gauges in full view and reach of the operator. Paint strainers shall be installed in paint supply lines to ensure freedom from residue and foreign matter that may cause malfunction of the spray guns. The paint applicator shall be readily adaptable for attachment of an air-actuated dispenser for the reflective media approved for use. Pneumatic spray guns shall be provided for hand application of paint in areas where the mobile paint applicator cannot be used.

1.3.2 Surface Preparation Equipment

1.3.2.1 Sandblasting Equipment

Sandblasting equipment shall include an air compressor, hoses, and nozzles of proper size and capacity as required for cleaning surfaces to be painted. The compressor shall be capable of furnishing not less than 70.8 liters per sec of air at a pressure of not less than 620 kPa at each nozzle used, and shall be equipped with traps that will maintain the compressed air free of oil and water.

1.3.2.2 Waterblast Equipment

The water pressure shall be specified at 17.9 MPa at 60 degrees C in order to adequately clean the surfaces to be marked.

1.3.3 Marking Removal Equipment

Equipment shall be mounted on rubber tires and shall be capable of removing markings from the pavement without damaging the pavement surface or joint sealant. Waterblasting equipment shall be capable of producing an adjustable, pressurized stream of water. Sandblasting equipment shall include an air compressor, hoses, and nozzles. The compressor shall be equipped with traps to maintain the air free of oil and water.

1.3.3.1 Shotblasting Equipment

Shotblasting equipment shall be capable of producing an adjustable depth of removal of marking and pavement. Each unit shall be self-cleaning and self-contained, shall be able to confine dust and debris from the operation, and shall be capable of recycling the abrasive for reuse.

1.3.3.2 Chemical Equipment

Chemical equipment shall be capable of application and removal of chemicals from the pavement surface, and shall leave only non-toxic biodegradeable residue.

1.3.4 Traffic Controls

Suitable warning signs shall be placed near the beginning of the worksite and well ahead of the worksite for alerting approaching traffic from both directions. Small markers shall be placed along newly painted lines or freshly placed raised markers to control traffic and prevent damage to newly painted surfaces or displacement of raised pavement markers. Painting equipment shall be marked with large warning signs indicating slow-moving painting equipment in operation.

1.4 HAND-OPERATED, PUSH-TYPE MACHINES

All machines, tools, and equipment used in performance of the work shall be approved and maintained in satisfactory operating condition. Hand-operated push-type machines of a type commonly used for application of paint to pavement surfaces will be acceptable for marking small streets and parking areas. Applicator machine shall be equipped with the necessary paint tanks and spraying nozzles, and shall be capable of applying paint uniformly at coverage specified. Sandblasting equipment shall be provided as required for cleaning surfaces to be painted. Hand-operated spray guns shall be provided for use in areas where push-type machines cannot be used.

1.5 MAINTENANCE OF TRAFFIC

1.5.1 Roads, Streets, and Parking Areas

When traffic must be rerouted or controlled to accomplish the work, the necessary warning signs, flagpersons, and related equipment for the safe passage of vehicles shall be provided.

1.6 WEATHER LIMITATIONS FOR REMOVAL

Pavement surface shall be free of snow, ice, or slush. Surface temperature shall be at least 5 degrees C and rising at the beginning of operations, except those involving shot or sand blasting. Operation shall cease during thunderstorms. Operation shall cease during rainfall, except for waterblasting and removal of previously applied chemicals. Waterblasting shall cease where surface water accumulation alters the effectiveness of material removal.

PART 2 PRODUCTS

2.1 PAINT

The paint shall be homogeneous, easily stirred to smooth consistency, and shall show no hard settlement or other objectionable characteristics during a storage period of 6 months. Paints for airfields, roads, and streets shall conform to FS TT-P-1952, color as indicated. Pavement marking paints shall comply with applicable state and local laws enacted to ensure compliance with Federal Clean Air Standards. Paint materials shall conform to the restrictions of the local Air Pollution Control District.

2.2 SAMPLING AND TESTING

Materials proposed for use shall be stored on the project site in sealed and labeled containers, or segregated at source of supply, sufficiently in advance of needs to allow 60 days for testing. Upon notification by the Contractor that the material is at the site or source of supply, a sample shall be taken by random selection from sealed containers by the Contractor in the presence of a representative of the Contracting Officer. Samples shall be clearly identified by designated name, specification number, batch number, manufacturer's formulation number, project contract number, intended use, and quantity involved. Testing shall be performed in an approved independent laboratory. If materials are approved based on reports furnished by the Contractor, samples will be retained by the Government for possible future testing should the material appear defective during or after application.

PART 3 EXECUTION

3.1 SURFACE PREPARATION

Surfaces to be marked shall be thoroughly cleaned before application of the pavement marking material. Dust, dirt, and other granular surface deposits shall be removed by sweeping, blowing with compressed air, rinsing with water or a combination of these methods as required. Rubber deposits, surface laitance, existing paint markings, and other coatings adhering to the pavement shall be completely removed with scrapers, wire brushes, sandblasting, approved chemicals, or mechanical abrasion as directed. Areas of old pavement affected with oil or grease shall be scrubbed with several applications of trisodium phosphate solution or other approved detergent or degreaser, and rinsed thoroughly after each application. After cleaning, oil-soaked areas shall be sealed with cut shellac to prevent bleeding through the new paint. Pavement surfaces shall be allowed to dry, when water is used for cleaning, prior to striping or marking. Surfaces shall be recleaned, when work has been stopped due to rain.

3.1.1 Pretreatment for Early Painting

Where early painting is required on rigid pavements, a pretreatment with an aqueous solution containing 3 percent phosphoric acid and 2 percent zinc chloride shall be applied to prepared pavement areas prior to painting.

3.1.2 Cleaning Existing Pavement Markings

In general, markings shall not be placed over existing pavement marking patterns. Existing pavement markings, which are in good condition but interfere or conflict with the newly applied marking patterns, shall be removed. Deteriorated or obscured markings that are not misleading or confusing or interfere

with the adhesion of the new marking material do not require removal. New preformed and thermoplastic pavement markings shall not be applied over existing preformed or thermoplastic markings. Whenever grinding, scraping, sandblasting or other operations are performed the work must be conducted in such a manner that the finished pavement surface is not damaged or left in a pattern that is misleading or confusing. When these operations are completed the pavement surface shall be blown off with compressed air to remove residue and debris resulting from the cleaning work.

3.1.3 Cleaning Concrete Curing Compounds

On new Portland cement concrete pavements, cleaning operations shall not begin until a minimum of 30 days after the placement of concrete. All new concrete pavements shall be cleaned by either sandblasting or water blasting. When water blasting is performed, thermoplastic and preformed markings shall be applied no sooner than 24 hours after the blasting has been completed. The extent of the blasting work shall be to clean and prepare the concrete surface as follows:

a. There is no visible evidence of curing compound on the peaks of the textured concrete surface.

b. There are no heavy puddled deposits of curing compound in the valleys of the textured concrete surface.

c. All remaining curing compound is intact; all loose and flaking material is removed.

d. The peaks of the textured pavement surface are rounded in profile and free of sharp edges and irregularities.

e. The surface to be marked is dry.

3.2 APPLICATION

All pavement markings and patterns shall be placed as shown on the plans.

3.2.1 Paint

Paint shall be applied to clean, dry surfaces, and only when air and pavement temperatures are above 5 degrees C and less than 35 degrees C. Paint temperature shall be maintained within these same limits. New asphalt pavement surfaces and new Portland concrete cement shall be allowed to cure for a period of not less than 30 days before applications of paint. Paint shall be applied pneumatically with approved equipment at rate of coverage specified . The Contractor shall provide guide lines and templates as necessary to control paint application. Special precautions shall be taken in marking numbers, letters, and symbols. Edges of markings shall be sharply outlined.

3.2.1.1 Rate of Application

a. Reflective Markings: Pigmented binder shall be applied evenly to the pavement area to be coated at a rate of 2.9 plus or minus 0.5 square meter per liter. Glass spheres shall be applied uniformly to the wet paint on road and street pavement at a rate of 0.7 plus or minus 0.06 kilograms of glass spheres per liter of paint.

b. Nonreflective Markings: Paint shall be applied evenly to the pavement surface to be coated at a rate of 2.9 plus or minus 0.5 square meter per liter.

3.2.1.2 Drying

The maximum drying time requirements of the paint specifications will be strictly enforced to prevent undue softening of bitumen, and pickup, displacement, or discoloration by tires of traffic. If there is a delay in drying of the markings, painting operations shall be discontinued until cause of the slow drying is determined and corrected.

END OF SECTION

SECTION 02770

CONCRETE SIDEWALKS AND CURBS AND GUTTERS

PART 1 GENERAL

1.1 REFERENCES

The publications listed below form a part of this specification to the extent referenced. The publications are referred to in the text by basic designation only.

AMERICAN ASSOCIATION OF STATE HIGHWAY AND TRANSPORTATION OFFICIALS (AASHTO)

AASHTO M 182	(1991) Burlap Cloth Made from Jute or Kenaf

AMERICAN SOCIETY FOR TESTING AND MATERIALS (ASTM)

~~ASTM A 185~~	~~1990a) Steel Welded Wire Fabric, Plain, for Concrete Reinforcement~~
ASTM A 615	(1990) Deformed and Plain Billet-Steel Bars for Concrete Reinforcement
ASTM A 616	(1990) Rail-Steel Deformed and Plain Bars for Concrete Reinforcement
ASTM A 617	(1990) Axle-Steel Deformed and Plain Bars for Concrete Reinforcement
ASTM C 31	(1991) Making and Curing Concrete Test Specimens in the Field
ASTM C 143	(1990a) Slump of Hydraulic Cement Concrete
ASTM C 171	(1991) Sheet Materials for Curing Concrete
ASTM C 172	(1990) Sampling Freshly Mixed Concrete
ASTM C 173	(1978) Air Content of Freshly Mixed Concrete by the Volumetric Method
ASTM C 231	(1991b) Air Content of Freshly Mixed Concrete by the Pressure Method

ASTM C 309	(1991) Liquid Membrane-Forming Compounds for Curing Concrete
ASTM D 1751	(1983; R 1991) Preformed Expansion Joint Filler for Concrete Paving and Structural Construction (Nonextruding and Resilient Bituminous Types)
ASTM D 1752	(1984; R 1992) Preformed Sponge Rubber and Cork Expansion Joint Fillers for Concrete Paving and Structural Construction
ASTM D 3405	(1994) Joint Sealants, Hot-Applied, for Concrete and Asphalt Pavements

CORPS OF ENGINEERS (COE)

COE CRD-C 527	(1988) Standard Specification for Joint Sealants, Cold-Applied, Non-Jet-Fuel-Resistant, for Rigid and Flexible Pavements

1.2 SUBMITTALS

Government approval is required for submittals with a "GA" designation; submittals having an "FIO" designation are for information only. The following shall be submitted in accordance with Section 01300 SUBMITTAL PROCEDURES:

SD-09 Reports

Field Quality Control; FIO.

Copies of all test reports within 24 hours of completion of the test.

SD-18 Records

Concrete; FIO.

Copies of certified delivery tickets for all concrete used in the construction.

1.3 WEATHER LIMITATIONS

1.3.1 Placing During Cold Weather

Concrete placement shall be discontinued when the air temperature reaches 5 degrees C and is falling. Placement may begin when the air temperature reaches 2 degrees C and is rising. Provisions shall be made to protect the concrete from freezing during the specified curing period. If necessary to place concrete when the temperature of the air, aggregates, or water is below 2 degrees C, placement shall be approved in writing. Approval shall be contingent upon full conformance with the following provisions. The underlying material shall be prepared and protected so that it is entirely free of frost when the concrete is deposited.

Mixing water and aggregates shall be heated as necessary to result in the temperature of the in-place concrete being between 10 and 30 degrees C. Methods and equipment for heating shall be approved. The aggregates shall be free of ice, snow, and frozen lumps before entering the mixer. Covering and other means shall be provided for maintaining the concrete at a temperature of at least 10 degrees C for not less than 72 hours after placing, and at a temperature above freezing for the remainder of the curing period.

1.3.2 Placing During Warm Weather

The temperature of the concrete as placed shall not exceed 30 degrees C except where an approved retarder is used. The mixing water and/or aggregates shall be cooled, if necessary, to maintain a satisfactory placing temperature. In no case shall the placing temperature exceed 35 degrees C.

1.4 PLANT, EQUIPMENT, MACHINES, AND TOOLS

1.4.1 General Requirements

Plant, equipment, machines, and tools used in the work shall be subject to approval and shall be maintained in a satisfactory working condition at all times. The equipment shall have the capability of producing the required product, meeting grade controls, thickness control and smoothness requirements as specified. Use of the equipment shall be discontinued if it produces unsatisfactory results. The Contracting Officer shall have access at all times to the plant and equipment to ensure proper operation and compliance with specifications.

1.4.2 Slip Form Equipment

Slip form paver or curb forming machine, will be approved based on trial use on the job and shall be self-propelled, automatically controlled, crawler mounted, and capable of spreading, consolidating, and shaping the plastic concrete to the desired cross section in one pass.

PART 2 PRODUCTS

2.1 CONCRETE

Concrete shall conform to the applicable requirements of SECTION: 03300A, CONCRETE FOR DUMPSTER PADS, except as otherwise specified. Concrete shall have a minimum compressive strength of 24 MPa at 28 days. Maximum size of aggregate shall be 37.5 mm.

2.1.1 Air Content

Mixtures shall have air content by volume of concrete of 5 to 7 percent, based on measurements made immediately after discharge from the mixer.

2.1.2 Slump

The concrete slump shall be 50 mm plus or minus 25 mm for hand placed concrete or 25 mm plus or minus 10 mm for slipformed concrete where determined in accordance with ASTM C 143.

2.1.3 Reinforcement Steel

Reinforcement bars shall conform to ASTM A 615, ASTM A 616, or ASTM A 617. ~~Wire mesh reinforcement shall conform to ASTM A 185.~~

2.2 CONCRETE CURING MATERIALS

2.2.1 Impervious Sheet Materials

Impervious sheet materials shall conform to ASTM C 171, type optional, except that polyethylene film, if used, shall be white opaque.

2.2.2 Burlap

Burlap shall conform to AASHTO M 182.

2.2.3 White Pigmented Membrane-Forming Curing Compound

White pigmented membrane-forming curing compound shall conform to ASTM C 309, Type 2.

2.3 CONCRETE PROTECTION MATERIALS

Concrete protection materials shall be a linseed oil mixture of equal parts, by volume, of linseed oil and either mineral spirits, naphtha, or turpentine. At the option of the contractor, commercially prepared linseed oil mixtures, formulated specifically for application to concrete to provide protection against the action of deicing chemicals may be used, except that emulsified mixtures are not acceptable.

2.4 JOINT FILLER STRIPS

2.4.1 Contraction Joint Filler for Curb and Gutter

Contraction joint filler for curb and gutter shall consist of hard-pressed fiberboard.

2.4.2 Expansion Joint Filler, Premolded

Expansion joint filler, premolded, shall conform to ASTM D 1751 or ASTM D 1752, 9.5 mm thick, unless otherwise indicated.

2.5 JOINT SEALANTS

2.5.1 Joint Sealant, Cold-Applied

Joint sealant, cold-applied shall conform to COE CRD-C 527.

2.5.2 Joint Sealant, Hot-Poured

Joint sealant, hot-poured shall conform to ASTM D 3405.

2.6 FORM WORK

Form work shall be designed and constructed to insure that the finished concrete will conform accurately to the indicated dimensions, lines, and elevations, and within the tolerances specified. Forms shall be of wood or steel, straight, of sufficient strength to resist springing during depositing and consolidating concrete. Wood forms shall be surfaced plank, 50 mm nominal thickness, straight and free from warp, twist, loose knots, splits or other defects. Wood forms shall have a nominal length of 3 m. Radius bends may be

formed with 19 mm boards, laminated to the required thickness. Steel forms shall be channel-formed sections with a flat top surface and with welded braces at each end and at not less than two intermediate points. Ends of steel forms shall be interlocking and self-aligning. Steel forms shall include flexible forms for radius forming, corner forms, form spreaders, and fillers. Steel forms shall have a nominal length of 3 m with a minimum of two welded stake pockets per form. Stake pins shall be solid steel rods with chamfered heads and pointed tips designed for use with steel forms.

2.6.1 Sidewalk Forms

Sidewalk forms shall be of a height equal to the full depth of the finished sidewalk.

2.6.2 Curb and Gutter Forms

Curb and gutter outside forms shall have a height equal to the full depth of the curb or gutter. The inside form of curb shall have batter as indicated and shall be securely fastened to and supported by the outside form. Rigid forms shall be provided for curb returns, except that benders or thin plank forms may be used for curb or curb returns with a radius of 3 m or more, where grade changes occur in the return, or where the central angle is such that a rigid form with a central angle of 90 degrees cannot be used. Back forms for curb returns may be made of 38 mm benders, for the full height of the curb, cleated together.

PART 3 EXECUTION

3.1 SUBGRADE PREPARATION

The subgrade shall be constructed to the specified grade and cross section prior to concrete placement. Subgrade shall be placed and compacted to conform with applicable requirements of Section 02300, EARTHWORK.

3.1.1 Sidewalk Subgrade

The subgrade shall be tested for grade and cross section with a template extending the full width of the sidewalk and supported between side forms.

3.1.2 Curb and Gutter Subgrade

The subgrade shall be tested for grade and cross section by means of a template extending the full width of the curb and gutter. The subgrade shall be of materials equal in bearing quality to the subgrade under the adjacent pavement.

3.1.3 Maintenance of Subgrade

The subgrade shall be maintained in a smooth, compacted condition in conformity with the required section and established grade until the concrete is placed. The subgrade shall be in a moist condition when concrete is placed. The subgrade shall be prepared and protected so as to produce a subgrade free from frost when the concrete is deposited.

Base Course for Sidewalks

Base course for sidewalk shall be as specified and placed in accordance with SECTION: AGGREGATE BASE COURSE.

3.2 FORM SETTING

Forms shall be carefully set to the indicated alignment, grade and dimensions. Forms shall be held rigidly in place by a minimum of three stakes per form placed at intervals not to exceed 1.2 meters . Corners, deep sections, and radius bends shall have additional stakes and braces, as required. Clamps, spreaders, and braces shall be used where required to insure rigidity in the forms. Forms shall be removed without injuring the concrete. Bars or heavy tools shall not be used against the concrete in removing the forms. Any concrete found defective after form removal shall be promptly and satisfactorily repaired. Forms shall be cleaned and coated with form oil each time before concrete is placed. Wood forms may, instead, be thoroughly wetted with water before concrete is placed, except that with probable freezing temperatures, oiling is mandatory.

3.2.1 Sidewalks

Forms for sidewalks shall be set with the upper edge true to line and grade with an allowable tolerance of 3 mm in any 3 m long section. After forms are set, grade and alignment shall be checked with a 3.05 m straightedge. Forms shall have a transverse slope of 20 millimeters per meter with the low side adjacent to the roadway. Side forms shall not be removed for 12 hours after finishing has been completed.

3.2.2 Curbs and Gutters

The forms of the front of the curb shall be removed not less than 2 hours nor more than 6 hours after the concrete has been placed. Forms back of curb shall remain in place until the face and top of the curb have been finished as specified for concrete finishing. Gutter forms shall not be removed while the concrete is sufficiently plastic to slump in any direction.

3.3 SIDEWALK CONCRETE PLACEMENT AND FINISHING

3.3.1 Formed Sidewalks

Concrete shall be placed in the forms in one layer of such thickness that when consolidated and finished the sidewalks will be of the thickness indicated. After concrete has been placed in the forms, a strike-off guided by side forms shall be used to bring the surface to proper section to be compacted. The concrete shall be consolidated with an approved vibrator, and the surface shall be finished to grade with a wood float, bull float, or darby, edged and broom finished.

3.3.2 Concrete Finishing

After straightedging, when most of the water sheen has disappeared, and just before the concrete hardens, the surface shall be finished to a smooth and uniformly fine granular or sandy texture free of waves, irregularities, or tool marks. A scored surface shall be produced by brooming with a fiber-bristle brush in a direction transverse to that of the traffic.

3.3.3 Edge and Joint Finishing

All slab edges, including those at formed joints, shall be finished carefully with an edger having a radius of 3 mm. Transverse joint shall be edged before brooming, and the brooming shall eliminate the flat surface left by the surface face of the edger. Corners and edges which have crumbled and areas which lack sufficient mortar for proper finishing shall be cleaned and filled solidly with a properly proportioned mortar mixture and then finished.

3.3.4 Surface and Thickness Tolerances

Finished surfaces shall not vary more than 7.9 mm (5/16 inch) from the testing edge of a 3.05 m straightedge. Permissible deficiency in section thickness will be up to 6.4 mm.

3.4 CURB AND GUTTER CONCRETE PLACEMENT AND FINISHING

3.4.1 Formed Curb and Gutter

Concrete shall be placed to the section required in a single lift. Consolidation shall be achieved by using approved mechanical vibrators.

3.4.2 Concrete Finishing

Exposed surfaces shall be floated and finished with a smooth wood float until true to grade and section and uniform in texture. Floated surfaces shall then be brushed with a fine-hair brush with longitudinal strokes. The edges of the gutter and top of the curb shall be rounded with an edging tool to a radius of 13 mm. (1/2 inch.) Immediately after removing the front curb form, the face of the curb shall be rubbed with a wood or concrete rubbing block and water until blemishes, form marks, and tool marks have been removed. The front curb surface, while still wet, shall be brushed in the same manner as the gutter and curb top. The top surface of gutter and entrance shall be finished to grade with a wood float.

3.4.3 Joint Finishing

Curb edges at formed joints shall be finished as indicated.

3.4.4 Surface and Thickness Tolerances

Finished surfaces shall not vary more than 6.4 mm from the testing edge of a 3.05 m straightedge. Permissible deficiency in section thickness will be up to 6.4 mm.

3.5 SIDEWALK JOINTS

Sidewalk joints shall be constructed to divide the surface into rectangular areas. Transverse contraction joints shall be spaced at a distance equal to the sidewalk width or 1.5 m on centers, whichever is less, and shall be continuous across the slab. Longitudinal contraction joints shall be constructed along the centerline of all sidewalks 3 m or more in width. Transverse expansion joints shall be installed at sidewalk returns and opposite expansion joints in adjoining curbs. Where the sidewalk is not in contact with the curb, transverse expansion joints shall be installed as indicated. Expansion joints shall be formed about structures and features which project through or into the sidewalk pavement, using joint filler of the type, thickness, and width indicated.

3.5.1 Contraction Joints

The contraction joints shall be formed in the fresh concrete by cutting a groove in the top portion of the slab to a depth of at least one-fourth of the sidewalk slab thickness, using a jointer to cut the groove, or by sawing a groove in the hardened concrete with a power-driven saw, unless otherwise approved. Sawed joints shall be constructed by sawing a groove in the concrete with a 3 mm blade to the depth indicated. An ample supply of saw blades shall be available on the job before concrete placement is started, and at least one standby sawing unit in good working order shall be available at the jobsite at all times during the sawing operations.

3.5.2 Expansion Joints

Expansion joints shall be formed with 9.5 mm joint filler strips and spaced a minimum of 15 m intervals. Joint filler shall be placed with top edge 6 mm below the surface and shall be held in place with steel pins or other devices to prevent warping of the filler during floating and finishing. Immediately after finishing operations are completed, joint edges shall be rounded with an edging tool having a radius of 3 mm, and concrete over the joint filler shall be removed. At the end of the curing period, expansion joints shall be carefully cleaned and filled with joint sealer. The joint opening shall be thoroughly cleaned before the sealing material is placed. Sealing shall be done so that the material will not be spilled on exposed surfaces of the concrete. Concrete at the joint shall be surface dry and atmospheric and concrete temperatures shall be above 10 degrees C at the time of application of joint sealing material. Excess material on exposed surfaces of the concrete shall be removed immediately and concrete surfaces cleaned.

3.5.3 Reinforcement Steel Placement

Reinforcement steel shall be accurately and securely fastened in place with suitable supports and ties before the concrete is placed.

3.6 CURB AND GUTTER JOINTS

Curb and gutter joints shall be constructed at right angles to the line of curb and gutter.

3.6.1 Contraction Joints

Contraction joints shall be constructed directly opposite contraction joints in abutting portland cement concrete pavements and spaced so that monolithic sections between curb returns will not be less than 1.5 m nor greater than 4.5 m in length. Contraction joints shall be constructed by means of 3 mm thick separators and of a section conforming to the cross section of the curb and gutter. Separators shall be removed as soon as practicable after concrete has set sufficiently to preserve the width and shape of the joint and prior to finishing.

3.6.2 Expansion Joints

Expansion joints shall be formed by means of preformed expansion joint filler material cut and shaped to the cross section of curb and gutter. Expansion joints shall be provided in curb and gutter directly opposite expansion joints of abutting portland cement concrete pavement, and shall be of the same type and thickness as joints in the pavement. Where curb and gutter do not abut portland cement concrete pavement, expansion joints at least 9.5 in width shall be provided at intervals not exceeding 15 meters . Expansion joints shall be provided in nonreinforced concrete gutter at locations indicated. Expansion joints shall be sealed immediately following curing of the concrete or as soon thereafter as weather conditions permit. Expansion joints and the top 25 mm depth of curb and gutter contraction-joints shall be sealed with joint sealer. The joint opening shall be thoroughly cleaned before the sealing material is placed. Sealing shall be done so that the material will not be spilled on exposed surfaces of the concrete. Concrete at the joint shall be surface dry and atmospheric and concrete temperatures shall be above 10 degrees C at the time of application of joint sealing material. Excess material on exposed surfaces of the concrete shall be removed immediately and concrete surfaces cleaned.

3.7 CURING AND PROTECTION

3.7.1 General Requirements

Concrete shall be protected against loss of moisture and rapid temperature changes for at least 7 days from the beginning of the curing operation. Unhardened concrete shall be protected from rain and flowing water. All equipment needed for adequate curing and protection of the concrete shall be on hand and ready for use before actual concrete placement begins. Protection shall be provided as necessary to prevent cracking of the pavement due to temperature changes during the curing period.

3.7.1.1 Mat Method

The entire exposed surface shall be covered with two or more layers of burlap. Mats shall overlap each other at least 150 mm. The mat shall be thoroughly wetted with water prior to placing on concrete surface and shall be kept continuously in a saturated condition and in intimate contact with concrete for not less than 7 days.

3.7.1.2 Impervious Sheeting Method

The entire exposed surface shall be wetted with a fine spray of water and then covered with impervious sheeting material. Sheets shall be laid directly on the concrete surface with the light-colored side up and overlapped 300 mm when a continuous sheet is not used. The curing medium shall not be less than 450 mm wider than the concrete surface to be cured, and shall be securely weighted down by heavy wood planks, or a bank of moist earth placed along edges and laps in the sheets. Sheets shall be satisfactorily repaired or replaced if torn or otherwise damaged during curing. The curing medium shall remain on the concrete surface to be cured for not less than 7 days.

3.7.1.3 Membrane Curing Method

A uniform coating of white-pigmented membrane-curing compound shall be applied to the entire exposed surface of the concrete as soon after finishing as the free water has disappeared from the finished surface. Formed surfaces shall be coated immediately after the forms are removed and in no case longer than 1 hour after the removal of forms. Concrete shall not be allowed to dry before the application of the membrane. If any drying has occurred, the surface of the concrete shall be moistened with a fine spray of water and the curing compound applied as soon as the free water disappears. Curing compound shall be applied in two coats by hand-operated pressure sprayers at a coverage of approximately 5 square meters per liter for both coats. The second coat shall be applied in a direction approximately at right angles to the direction of application of the first coat. The compound shall form a uniform, continuous, coherent film that will not check, crack, or peel and shall be free from pinholes or other imperfections. If pinholes, abrasion, or other discontinuities exist, an additional coat shall be applied to the affected areas within 30 minutes. Concrete surfaces that are subjected to heavy rainfall within 3 hours after the curing compound has been applied shall be resprayed by the method and at the coverage specified above. Areas where the curing compound is damaged by subsequent construction operations within the curing period shall be resprayed. Necessary precautions shall be taken to insure that the concrete is properly cured at sawed joints, and that no curing compound enters the joints. The top of the joint opening and the joint groove at exposed edges shall be tightly sealed before the concrete in the region of the joint is resprayed with curing compound. The method used for sealing the joint groove shall prevent loss of moisture from the joint during the entire specified curing period. Approved standby facilities for curing concrete pavement shall be provided at a location accessible to the jobsite for use in the event of mechanical failure of the spraying equipment or other conditions that might prevent correct application of the membrane-curing compound at the proper time. Concrete surfaces to which membrane-curing compounds have been applied shall be adequately protected during the entire curing period from pedestrian and vehicular traffic, except as required for joint-sawing operations and surface tests, and from any other possible damage to the continuity of the membrane.

3.7.2 Backfilling

After curing, debris shall be removed and the area adjoining the concrete shall be backfilled, graded, and compacted to conform to the surrounding area in accordance with lines and grades indicated.

3.7.3 Protection

Completed concrete shall be protected from damage until accepted. The Contractor shall repair damaged concrete and clean concrete discolored during construction. Concrete that is damaged shall be removed and reconstructed for the entire length between regularly scheduled joints. Refinishing the damaged portion will not be acceptable. Removed damaged portions shall be disposed of as directed.

3.8 FIELD QUALITY CONTROL

3.8.1 General Requirements

The Contractor shall perform the inspection and tests described and meet the specified requirements for inspection details and frequency of testing. Based upon the results of these inspections and tests, the Contractor shall take the action and submit reports as required below, and any additional tests to insure that the requirements of these specifications are met.

3.8.2 Concrete Testing

3.8.2.1 Strength Testing

The Contractor shall provide molded concrete specimens for strength tests. Samples of concrete placed each day shall be taken not less than once a day nor less than once for every 190 cubic meters of concrete. The samples for strength tests shall be taken in accordance with ASTM C 172. Cylinders for acceptance shall be molded in conformance with ASTM C 31 by an approved testing laboratory. Each strength test result shall be the average of two test cylinders from the same concrete sample tested at 28 days, unless otherwise specified or approved. Concrete specified on the basis of compressive strength will be considered satisfactory if the averages of all sets of three consecutive strength test results equal or exceed the specified strength, and no individual strength test result falls below the specified strength by more than 4 Mpa.

3.8.2.2 Air Content

Air content shall be determined in accordance with ASTM C 173 or ASTM C 231. ASTM C 231 shall be used with concretes and mortars made with relatively dense natural aggregates. Two tests for air content shall be made on randomly selected batches of each class of concrete placed during each shift. Additional tests shall be made when excessive variation in concrete workability is reported by the placing foreman or the Government inspector. If results are out of tolerance, the placing foreman shall be notified and he shall take appropriate action to have the air content corrected at the plant. Additional tests for air content will be performed on each truckload of material until such time as the air content is within the tolerance specified.

3.8.2.3 Slump Test

Two slump tests shall be made on randomly selected batches of each class of concrete for every 190 cubic meters, or fraction thereof, of concrete placed during each shift. Additional tests will be performed when excessive variation in the workability of the concrete is noted or when excessive crumbling or slumping is noticed along the edges of slip-formed concrete.

3.8.3 Thickness Evaluation

The anticipated thickness of the concrete shall be determined prior to placement by passing a template through the formed section or by measuring the depth of opening of the extrusion template of the curb forming machine. If a slip form paver is used for sidewalk placement, the subgrade shall be true to grade prior to concrete placement and the thickness will be determined by measuring each edge of the completed slab.

3.8.4 Surface Evaluation

The finished surface of each category of the completed work shall be uniform in color and free of blemishes and form or tool marks.

3.9 SURFACE DEFICIENCIES AND CORRECTIONS

3.9.1 Thickness Deficiency

When measurements indicate that the completed concrete section is deficient in thickness by more than 6 mm the deficient section will be removed, between regularly scheduled joints, and replaced.

3.9.2 High Areas

In areas not meeting surface smoothness and plan grade requirements, high areas shall be reduced either by rubbing the freshly finished concrete with carborundum brick and water when the concrete is less than 36 hours old or by grinding the hardened concrete with an approved surface grinding machine after the concrete is 36 hours old or more. The area corrected by grinding the surface of the hardened concrete shall not exceed 5 percent of the area of any integral slab, and the depth of grinding shall not exceed 6 mm. All pavement areas requiring grade or surface smoothness corrections in excess of the limits specified above shall be removed and replaced.

3.9.3 Appearance

Exposed surfaces of the finished work will be inspected by the Government and any deficiencies in appearance will be identified. Areas which exhibit excessive cracking, discoloration, form marks, or tool marks or which are otherwise inconsistent with the overall appearances of the work shall be removed and replaced.

END OF SECTION

This page intentionally blank

SECTION 02811

IRRIGATION SPRINKLER SYSTEMS

PART 1 GENERAL

1.1 SUMMARY

This performance specification covers the requirements for the design and installation of an automatic underground irrigation system.

1.2 REFERENCES

The publications listed below form a part of this specification to the extent referenced. The publications are referred to in the text by the basic designation only.

AMERICAN SOCIETY FOR TESTING AND MATERIALS (ASTM)

ASTM A53	(1997) Pipe, Steel, Black and Hot-Dipped, Zinc-Coated, Welded and Seamless
ASTM D2241	(1996a) Poly(Vinyl Chloride) (PVC) Pressure Rated Pipe (SDR Series)
ASTM D2287	(1996a) Nonrigid Vinyl Chloride Polymer and Copolymer Molding and Extrusion Compounds
ASTM D2464	(1996a) Threaded Poly(Vinyl Chloride) (PVC) Plastic Pipe Fittings, Schedule 80
ASTM D2466	(1996a) Poly(Vinyl Chloride) (PVC) Plastic Pipe Fittings, Schedule 40
ASTM D2564	(1996a) Solvent Cements for Poly(Vinyl Chloride) (PVC) Plastic Pipe and Fittings
ASTM D2774	(1994) Underground Installation of Thermostatic Pressure Piping
ASTM D2855	(1996) Making Solvent-Cemented Joints with Poly (Vinyl Chloride) (PVC) Pipe and Fittings
ASTM F441	(1995) Chlorinated Poly (Vinyl Chloride) (CPVC) Plastic Pipe, Schedules 40 and 80

FOUNDATION FOR CROSS-CONNECTION CONTROL AND HYDRAULIC RESEARCH (FCCCHR)

FCCCHR-01 (1993) Manual of Cross-Connection Control

MANUFACTURERS STANDARDIZATION SOCIETY OF THE VALVE AND FITTINGS INDUSTRY (MSS)

MSS SP80 (1997) Bronze Gate, Globe, Angle and Check Valves

NATIONAL ELECTRICAL MANUFACTURERS ASSOCIATION (NEMA)

NEMA ICS2 (1993) Industrial Control and Systems, Controllers, Contractors, and Overload Relays Not More than 2,000 Volts AC or 750 Volts DC

NEMA ICS6 (1993) Industrial Controls and Systems, Enclosures

NATIONAL FIRE PROTECTION ASSOCIATION (NFPA)

NFPA 70 (1996; Errata 96-4) National Electrical Code

1.3 PERFORMANCE REQUIREMENTS

This performance specification covers the requirements for design and installation of an automatic underground irrigation system. The irrigation system shall be designed by a Certified Irrigation Consultant, Landscape Architect, or Registered Engineer with a minimum of three years experience in irrigation design. The system shall be designed to be constructed within the areas indicated on the drawings. System design shall utilize commercial grade equipment readily available in the Malmstrom AFB\Great Falls area. The irrigation system shall operate with a minimum water pressure of 310 kPa at connection to the backflow prevention device, 207 kPa at the last head in each spray zone, and 103 kPa at the last emitter in each drip zone.

1.4 SUBMITTALS

Submit the following in accordance with Section 01330, "Submittal Procedures."

1.4.1 SD-13, Design Data, FIO

a. System pressure calculations

b. Irrigation requirements

1.4.2 SD-17, Manufacturer's Catalog Data, FIO

a. Valves

b. Sprinkler heads

c. Backflow preventers

d. Automatic controllers

e. Emitter heads and accessories

1.4.3 SD-35, As-Built Drawings, GA

a. Sprinkler system

As built drawings which provide current factual information showing locations of mains, laterals, heads, valves, and controllers, including deviations from and amendments to the drawings and change in the work. The drawings shall be full size. Submit as-build drawings in accordance with specification Section 01702 – AS-BUILD RECORDS AND DRAWINGS.

b. Irrigation legend

1.4.3.1 Sprinkler System Drawing, GA

Indicate the following:

a. Extent of coverage, general arrangement of system, slopes of terrain.

b. Type and number of heads, number of circuits, and sizes of piping.

c. Invert elevations. Indicate obstructions interfering with operation.

d. Water source equipment and sizes, including existing mains, piping, valves and meters.

e. System and supply pressures.

f. Weekly precipitation requirements of the area. Requirements for irrigating the area in hours per day per cycle.

g. Typical wind velocity and direction.

h. Tabulate radius of throw, psi, gpm of sprinklers and gph of emitters.

i. Detail of drain pockets.

1.4.4 SD-44, Manufacturer's Instructions, FIO

a. Automatic controllers

b. Sprinkler heads

c. Emitter heads and accessories

d. Backflow preventers

Submit mounting details for automatic controllers.

1.4.5 SD-76, Certificates of Compliance, FIO

a. Backflow preventers

Submit a certificate of Full Approval or a current Certificate of Approval from FCCCHR for size, and make of backflow preventer being provided for this project. A Certificate of Provisional Approval will not be acceptable.

1.4.6 SD-77, Field Test Reports, FIO

a. Pressure test

b. Operation test

Submit record of pressure tests conducted on recording gauge.

1.4.7 SD-80, Operation and Maintenance Manuals, GA

a. Piping and fittings, Data Package 1

b. Sprinkler heads and accessories, Data Package 1

c. Emitter heads and accessories, Data Package 1

d. Valves, Data Package 2

e. Controller, Data Package 2

Provide operating instructions for the controller mounted near to on the product for normal, safe, operation.
Provide a full size copy of as-build drawings with the Operations and Maintenance Manuals.
Submit operation and maintenance data in accordance with Section 01701, "Operation and Maintenance Manuals." Include troubleshooting procedures with

respect to valve and controller problems.

1.4.8 Spare Parts, FIO

Spare parts data for each different item of material and equipment specified, after approval of the related submittals and not later than the start of the field tests. The data shall include a complete list of parts and supplies, with current unit prices and sources of supply.

1.5 DELIVERY, STORAGE, AND HANDLING

1.5.1 Delivery

Deliver materials in original rolls, packages, cartons, and containers with the name of manufacturer, brand, and model. Inspect materials delivered to the site for damage.

1.5.2 Storage

Store materials on site in enclosures or under protective covering. Store plastic piping and rubber gaskets under cover out of direct sunlight. Do not store materials directly on ground. Keep inside of pipes and fittings free from dirt and debris.

1.5.3 Handling

Handle and carry pipe, fittings, valves, and accessories in such a manner as to ensure delivery to trench in sound undamaged condition. Do not drag pipe.

1.6 EXTRA STOCK

a. Two additional sprinkler heads of each size and type;

b. Two valve keys for operating manual valves;

c. Two wrenches for removing and installing each type of head;

d. Two quick coupler keys and hose swivels; and

e. Four irrigation controller housing keys.

1.7 WARRANTY

The Contractor shall warranty the irrigation system for a minimum of one year following installation.

PART 2 PRODUCTS

2.1 GENERAL MATERIALS AND EQUIPMENT REQUIREMENTS

2.1.1 Standard Products

Materials and equipment shall be the standard products of a manufacturer who has produced similar systems which have performed well for a minimum period of 2 years prior to bid opening. Equipment shall be supported by a service organization that is, in the opinion of the contracting Officer, reasonably convenient to the site.

2.1.2 Equipment Identification

Each item of equipment shall have the manufacturer's name, address, type or style, model or serial number on a plate secured to the item of equipment.

2.2 PIPING MATERIALS

2.2.1 Polyvinyl Chloride (PVC) Pipe, Fittings and Solvent Cement

NSF STD14, seal of approval for potable water.

2.2.1.1 Pipe

ASTM D1785, PVC 1120 Schedule 40.

2.2.1.2 Fittings

a. Solvent Welded Socket Type: ASTM D2466, Schedule 40.

b. Threaded Type: ASTM D2464, Schedule 80.

2.2.1.3 Solvent Cement

ASTM D2564.

2.2.2 Dielectric Fittings

ASTM F441, Schedule 80, CPVC threaded pipe nipples, 100 mm minimum length.

2.2.3 Emitter Hose and Distribution Tubing

ASTM D2287, maximum inside diameter (id) of 13mm, minimum wall thickness of 2.25 mm (90 mils), vinyl plastic extruded from non-rigid chloride, integrally algae-resistant, homogeneous throughout, smooth inside and outside, free from foreign materials, cracks, serrations, blisters and other effects. Provide slip fittings.

2.3 SPRINKLER AND EMITTER HEADS

2.3.1 Pop-Up Sprinkler Heads

Nozzle rises a minimum of 100 mm above body.

2.3.2 Rotary Pop-Up Sprinklers

Sprinklers shall be capable of coverage as indicated on the drawings. Construction shall be high-impact molded plastic with filter screen, reducible watering radius, and choice of nozzles as indicated on the drawings and have adjustable radius capabilities.

2.3.3 Emitter Heads

Self-cleaning, pressure compensating diaphragm with one or six self-piercing barbed outlet(s); each capable from 1 L to 8 L per hour flow; emitter body ultraviolet stabilized, algae, and heat resistant plastic construction.

2.4 VALVES

2.4.1 Gate Valves, Less than 75 mm

MSS SP80, Type 1, Class 150, threaded ends.

2.4.2 Angle Valves, Less Than 65 mm

MSS SP80, Type 3, Class 150 threaded ends.

2.4.3 Quick Coupling Valves

Two-piece unit consisting of a coupler water seal valve assembly and a removable upper body to allow spring and key track to be serviced without shutdown of main. Provide brass parts. Provide lockable vinyl lids with springs for positive closure on key removal.

2.4.4 Remote Control Valves, Electrical

Solenoid actuated globe valves of 20 mm to 80 mm size, suitable for 24 volts, 60/50 cycle, with power rating of 6.5 watts, and designed to provide for shut-off in event of power failure. Incorporate an external flow control adjustment with shut-off capability. Provide external plug at diaphragm chamber to enable manual operation. Provide filter in control chamber to prevent valve clogged with debris. Provide durable nylon diaphragm. Provide accessibility to internal parts without removing valve from system. Provide cast bronze valve housing suitable for service at 1034 kPa operating pressure.

2.4.5 Drain Valves

2.4.5.1 Manual

MSS SP80, Type 3, Class 150 threaded ends for sizes less than 65 mm.

2.4.6 Backflow Preventers

Double check valve assemblies shall be tested, approved, and listed in accordance with FCCHR-01.

2.5 ACCESSORIES AND APPURTENANCES

2.5.1 Valve Keys for Manually Operated Valves

Fifteen mm diameter by 1000 mm long, tee handles and key to fit valves.

2.5.2 Valve Boxes and Concrete Pads

2.5.2.1 Valve Boxes

Cast-iron or precast concrete valve box for each gate valve, manual control valve and remote control valve. Provide box sizes that are suitable and adjustable for valve used. Cast the word "IRRIGATION" on cover. Use minimum 130 mm shaft diameter of box. Paint cast-iron box with bituminous material. Valve box for main shut off valve shall be lockable.

2.5.3 Emitter Head Accessories

2.5.3.1 Strainer

Provide strainer at inlet to each drip line. Provide stainless steel screen having equivalent of 140-mesh filtration capacity. Incorporate flush valves within strainer to clean screen without disassembling unit.

2.5.3.2 Pressure Regulator

Incorporate regulator into each drip system if supply pressure exceeds 350 kPa.

2.5.3.3 Riser Adapters

Required with a rigid piping system.

2.5.3.4 Tubing Stakes

Plastic coated steel, or other non-corrosive strong material to secure tubing.

2.5.3.5 Emitter Outlet Check Valve (Bug Cap)

Provide check valves at end of each emitter outlet distribution line. Valves shall permit free flow of water with minimum restriction; prevent back siphoning, entry of insects, and contamination into outlet ports.

2.5.3.6 Access Sleeve

Provide access sleeve to buried emitters placed in covered boxes. Secure lids of access sleeve with removable lugs. Secure drip hose in both vertical and horizontal axis.

2.5.3.7 Closure Caps

Provide in accordance with manufacturer's recommendations.

2.6 AUTOMATIC CONTROLLERS, ELECTRICAL

****
NOTE: A satellite controller has not been specified in previous dormitory projects at Malmstrom AFB. The paragraph below was edited based on the information available at the time of RFP issue. The designer is responsible for coordination with the user and further revisions to this specification as necessary to provide a complete and usable system.
****

Controller, NEMA ICS2 with 120-volt single phase service, operating with indicated stations, and grounded chassis. Provide enclosure, NEMA ICS6 Type 3R, with locking hinged cover, wall-mounted. Provide unit with a minimum of 18 zones or the number indicated on the irrigation plan. Controller shall be programmable with the following features: watering times for each station set from 1 minute to 9 hours 59 minutes in one minute increments; water days for each rogram based on seven day week or a skip-by-day routine allowing program to skip from 1 to 30 days between watering; four (4) completely independent programs with four (4) minimum start times, for a total of 16-20 possible start times per day; percentage key to increase or decrease all station run times on a percentage basis in 1% increments from 0% to 300% or 5% to 300% by program; programmable rain shut down; rain sensor; flow sensing; remote control capability with remote radio receiver; a circuit breaker for surge protection; a non-volatile memory able to hold program(s) indefinitely during power outage or season shutdown. Controller shall be Rainbird ESP-SAT or system compatible with the central irrigation management control system (IMCS) being currently installed on the base. Radio modem and antenna to also be provided compatible with the IMCS.

2.7 ELECTRICAL CIRCUITS

2.7.1 Wiring for Electrically Operated Valves and Rigid Conduit for Electrical Power shall be in accordance with NFPA 70.

2.8 WATER SUPPLY MAIN MATERIALS

Tapping sleeves, service cut off valves, and connections to water supply mains shall be in accordance with Specification Section 02510 - WATER DISTRIBUTION SYSTEM.

2.9 DIELECTRIC FITTINGS

Dielectric fittings shall be in accordance with Section 02510 - WATER DISTRIBUTION SYSTEM.

PART 3 EXECUTION

3.1 INSTALLATION

Install sprinkler system after site grading has been completed. Excavation, trenching, and backfilling for

irrigation system shall be in accordance with the applicable provisions of specification Section 02316 - EXCAVATION, TRENCHING, AND BACKFILLING FOR UTILITY SYSTEMS, except as modified herein.

3.1.1 Trenching

Hand trench around roots to pipe grade when roots of 50 mm diameter or greater are encountered. Make width of trench 100 mm minimum or 1 1/2 times diameter of pipe, whichever is wider. Backfill and hand tamp over excavation. When rock is encountered, excavate 100 mm deeper and backfill with silty sand (SM) or well-graded sand (SW) to pipe grade. Keep trenches free of obstructions and debris that would damage pipe. Do not mix subsoil with topsoil. Bore under existing concrete walks, drives and other obstacles at a depth conforming to bottom of adjacent trenches. Install pipe sleeve, two pipe diameters larger than sprinkler pipe, to fill bore.

3.1.2 Piping System

3.1.2.1 Cover

Install horizontal underground piping in accordance with minimum depths of backfill cover specified.

3.1.2.2 Clearances

a. Minimum horizontal clearances between lines: 100 mm for 50 mm pipe and less; 300 mm for 65 mm pipe and larger.

b. Minimum vertical clearances between lines: 25 mm.

3.1.2.3 Minimum Pitch

Down 150 mm per 40 m in direction of drain valves.

3.1.3 Piping Installation

3.1.3.1 Polyvinyl Chloride (PVC) Pipe

a. Solvent-Cemented Joints: ASTM D2855.

b. Threaded Joints: PPI TN8/8; full cut with a maximum of three threads remain exposed on pipe and nipples. Make threaded joints tight without recourse to wicks or fillers, other than polytetrafluoroethylene thread tape.

c. Piping: ASTM D2774 or ASTM D2855, and pipe manufacturer's instructions. Install pipe in a serpentine (snaked) manner to allow for expansion and contraction in trench before backfilling. Install pipes at temperatures over 5 degrees Celsius. All irrigation piping shall have a #12 copper tracer wire installed in the same trench between the automatic control valves and heads, and along the mainlines.

3.1.3.3 Dielectric Protection

Where pipes of dissimilar metal are joined, make connection with dielectric fitting.

3.1.4 Valves

3.1.4.1 Valves

Install and plumb valve in a valve box extending from grade to below valve body, with a minimum of 100 mm cover measured from finish grade to top of valve stem.

3.1.4.2 Drain Valves

Entire system shall be manually drainable. Equip low point of each underground line with drain valve draining into an excavation containing 0.03 cubic meter gravel. Cover gravel with building paper. Backfill with excavated material and 150 mm of topsoil.

3.1.5 Sprinklers and Quick Coupling Valves

Install plumb and level with terrain.

3.1.6 Installation of Drip Irrigation System

Install main lines and valves. Before installing emitter laterals, perform pressure test then flush out sand, plastic shaving and other foreign matter.

3.1.6.1 Emitter Hose

Bury emitter laterals 150 mm deep. Solvent weld each connection in accordance with manufacturer's recommendation to standard weight Schedule 40 PVC fittings and bushings. Install hose in a serpentine manner. When cutting hose, use a shearing tool such as a pipe cutter, knife or shears. Use only manufacturer's recommended tool and procedure when punching hose for emitters.

3.1.6.2 Emitter Heads

Install emitter in a plastic emitter box. Connect emitter on a rigid PVC nipple to PVC drip lateral with a tee or elbow. Attach tubing to barbed fitting and daylight distribution tubing at rootball secured with stake. Add bug cap at end of secured distribution tubing. After installing emitters and before operating system, open end of drip lateral and flush lines clean. The number of emitters on a line shall not exceed manufacturer's recommendations for that hose or distribution tubing size and length.

3.1.6.3 Tubing Stakes

Secure main irrigation line with stakes where line is aboveground. Space stakes to ensure that hose does not shift location in presence of foot traffic, operations, gravity on slope installations, or environmental effects. Stake discharge of the emitter distribution tubing to ensure that discharge point of emitter will be maintained at specified position in relation to plant material to be irrigated.

3.1.7 Backflow Preventers

Install backflow preventer in new connection to existing water distribution system, between connection and control valves where indicated on the drawings.

3.1.8 Control Wire and Conduit

3.1.8.1 Wires

Bury wires beside pipe in same trench. Provide conduit where wires run under paving. Wires shall be number tagged at key locations along main to facilitate service. Provide one control circuit for each zone and a circuit to control sprinkler system.

3.1.8.2 Loops

Provide a 300 mm loop of wire at each valve where controls are connected.

3.1.8.3 Expansion and Contraction

Bundle multiple tubes or wires and tape together at 4 m to 8 m intervals with 300 mm loop for expansion and contraction.

3.1.8.4 Splices

Make electrical splices waterproof.

3.1.9 Automatic Controller

Determine exact location of controllers in field before installation. Coordinate the electrical service to these locations. Install in accordance with manufacturer's recommendations and NFPA 70.

3.1.10 Flushing

After piping, risers, and valves are in place and connected, but prior to installation of sprinkler heads, quick coupler assemblies and valves, flush piping system under a full head of water. Maintain flushing for 3 minutes.

3.1.11 Backfill

3.1.11.1 Minimum Cover

a. 450 mm for 50 mm or smaller pipe

b. 600 mm for 64 mm pipe or larger

c. 450 mm for low-voltage wires.

Fill remainder of trench or pipe cover with excavated soil, and compact soil with plate hand-held compactors to same density as undisturbed adjacent soil. Provide topsoil depth or planting soil depth as required in accordance with Section 02922 SODDING and Section 02930 EXTERIOR PLANTING.

3.1.11.2 Restoration

Restore lawns and plants according to Section 02922 SODDING and Sections 02930 EXTERIOR PLANTING. Restore pavements according to Sections 02770 - CONCRETE SIDEWALKS AND CURBS AND GUTTERS and 02741 - BITUMINOUS PAVEMENT FOR ROADS, STREETS, AND OPEN STORAGE AREAS.

3.1.12 Adjustment

After grading, seeding, and rolling of planted areas, adjust sprinkler heads flush with finished grade. Make adjustments by providing new nipples of proper length or by use of heads having an approved device, integral with head, which will permit adjustment in height of head without changing piping.

3.1.13 Sterilization

Sprinkler system fed from a potable water system shall be sterilized upstream of backflow preventer in accordance with Section 02510 - WATER DISTRIBUTION SYSTEM.

3.1.14 Winterization

The Contractor shall be responsible for deactivating, blowing-out, and draining the entire irrigation system prior to the onset of the first freezing season and for reactivating the system at the onset of the following spring growing season.

3.2 FIELD QUALITY CONTROL/FIELD TESTS

The CQC representative will witness field inspections and field tests specified in this section. All instruments, equipment, facilities, and labor required to conduct the tests shall be provided by Contractor.

3.2.1 Pressure Test

3.2.1.1 Duration

During pressure test, maintain a hydrostatic pressure of 1034 kPa without pumping for a period of one hour with an allowable pressure drop of 35 kPa before backfilling system.

3.2.1.2 Leaks

Correct leaks. Make necessary corrections to stop leakage.

3.2.1.3 Retest

Retest system twice until pressure can be maintained for duration of test.

3.2.2 Operation Test

3.2.2.1 Accessories

At conclusion of pressure test, install sprinkler heads or emitter heads, quick coupling assemblies, and hose valves, and test entire system for operation under normal operating pressure.

3.2.2.2 Acceptance

Operation test is acceptable if system operates through at least one complete cycle for areas to be sprinkled. The Contractor shall be responsible for operating the irrigation system throughout the plant material and turf establisment periods. See Specification Sections 02921 SEEDING, 02922 SODDING, and 02930 EXTERIOR PLANTING.

3.2.3 Controller Charts

After as-built drawings are approved by Contracting Officer, prepare controller charts. Provide one chart for each controller supplied. Indicate in chart area controlled by automatic controller. The chart is a reduced drawing of actual as-built system that will fit the maximum dimensions inside controller housing. Use black line print for chart and a different pastel or transparent color to indicate each station area of coverage. After chart is completed and approved for final acceptance, seal chart between two 0.5 mm thick pieces of clear plastic.

3.3 FIELD TRAINING

A field training course shall be provided for designated operating and maintenance staff members. Training shall be provided for a total period of 4 hours of normal working time and shall start after the system is functionally complete but prior to final acceptance tests. Field training shall cover all of the items contained in the operating and maintenance manuals.

3.4 CLEANUP

Upon completion of installation of system, all debris and surplus materials resulting from the work shall be removed.

END OF SECTION

SECTION 02921

SEEDING

PART 1 GENERAL

1.1 SUMMARY (Not Applicable)

1.2 REFERENCES

The publications listed below form a part of this specification to the extent referenced. The publications are referred to in the text by basic designation only.

AGRICULTURAL MARKETING SERVICE (AMS)

AMS-01 (Sep 1977; Amended Oct 29, l986) Federal Seed Act Regulations (Part 20): Certified Seed Regulations

FEDERAL SPECIFICATIONS (FS)

FS O-F-241 (Rev D) Fertilizers, Mixed, Commercial

FS JJJ-S-181 (Rev B) Seeds, Agricultural

1.3 SUBMITTALS

Government approval is required for submittals with a "GA" designation; submittals having an "FIO" designation are for information only. The following shall be submitted in accordance with Section 01300 SUBMITTALS:

SD-01 Data

Manufacturer's Literature; FIO

Manufacturer's literature discussing physical characteristics, application and installation instructions for erosion control material, and for chemical treatment material.

SD-07 Schedules

Equipment List; FIO

A list of proposed pesticide application, seeding and mulching equipment to be used in performance of seeding operation, including descriptive data and calibration tests.

SD-08 Statements

Delivery; FIO.

Delivery schedule, at least 10 days prior to the intended date of the first delivery.

Application of Pesticide; FIO.

Pesticide treatment plan with proposed sequence of pesticide treatment work. The pesticide trade name, chemical composition, formulation, concentration, application rate of active ingredients and method of application for all materials; and the name and state license number of the state certified applicator shall be included.

Maintenance Report; FIO.

Written record of maintenance work performed.

Turf Establishment Period; GA.

Written calendar time period for the turf establishment period. When there is more than one turf establishment period, the boundaries of the turfed area covered for each period shall be described.

SD-13 Certificates

Certificates of compliance, FIO, certifying that materials meet the requirements specified, prior to the delivery of materials. Certified copies of the reports for the following materials shall be included:

a. Seed: For mixture, percent pure live seed, minimum percent germination and hard seed, maximum percent weed seed content, maximum percent other crop and/or inert, date tested and state certification.

b. Fertilizer: For chemical analysis, composition percent.

c. Agricultural Limestone: For calcium carbonate equivalent and sieve analysis.

d. Asphalt Adhesive: For compliance with ASTM D 977 and ASTM D 2028.

e. Pesticide Material: For EPA registration number and registered uses.

f. Topsoil: For pH, organic matter content, textural class, particle size, chemical analysis and soluble salts analysis. Recommended amendments and fertilizer.

1.4 DELIVERY, INSPECTION, STORAGE, AND HANDLING

1.4.1 Delivery

1.4.1.1 Topsoil

A soil test shall be provided for topsoil delivered to the site. Topsoil shall be a mix containing approximately 70 percent sandy loam and 30 percent organic material. The sandy loam shall be as described by the USDA textural class and shall have a maximum particle size of 6.3 mm, 70-75 percent passing a 2.0 mm screen, 35-55 percent passing a .425 mm screen, and 5-25 percent passing a .075 mm

screen. Topsoil shall contain 15-30 percent organic matter as determined by the organic carbon 6A chemical analysis method described in the USDA soil investigation report No. 1. Topsoil shall be obtained from well drained areas and shall not contain more than 5 percent water by volume. Topsoil shall be free from debris, noxious weeds, toxic substances or any other material that may be harmful to plant growth. The pH shall be between 5.5 and 7.5. Soluble salts shall not exceed 600 ppm (or 4mmhos). Blow sand shall not be acceptable.

1.4.1.2 Soil Amendments

Soil amendments shall be delivered to the site in the original, unopened containers bearing the manufacturer's chemical analysis. In lieu of containers, soil amendments may be furnished in bulk. A chemical analysis shall be provided for bulk deliveries.

1.4.1.3 Pesticide

Pesticide material shall be delivered to the site in the original, unopened containers bearing legible labels indicating the Environmental Protection Agency (EPA) registration number and the manufacturer's registered uses.

1.4.2 Inspection

Seed shall be inspected upon arrival at the job site by the Contracting Officer for conformity to type and quality in accordance with paragraph MATERIALS. Other materials shall be inspected for meeting specified requirements and unacceptable materials shall be removed from the job site.

1.4.3 Storage

Materials shall be stored in areas designated by the Contracting Officer. Seed, lime and fertilizer shall be stored in cool, dry locations away from contaminants. Chemical treatment materials shall not be stored with other landscape materials.

1.4.4 Handling

1.4.4.1 Materials

Except for bulk deliveries, materials shall not be dropped or dumped from vehicles.

PART 2 PRODUCTS

2.1 MATERIALS

2.1.1 Seed

2.1.1.1 Seed Classification

State-certified seed of the latest season's crop shall be provided in original sealed packages bearing the producer's guaranteed analysis for percentages of mixture, purity, germination, hard seed, weed seed content, and inert material. Labels shall be in conformance with AMS-01 and applicable state seed laws.

2.1.1.2 Seed Mixtures

Seed mixtures shall be proportioned by weight as follows:

Usage	Bot. Name	Com. Name	% Mix Seed (PLS)	% Pure Live
Dryland Grass	Festuca longifolia	Hard Fescue	40	81
	Festucia ovina	Sheep Fescue	25	80
	Poa compressa	Canada Bluegrass	20	64
	Agropyron riparium	Sodar Streambank Wheatgrass	15	70
			1.1 kg PLS/ 100 m^2 or 110 kg PLS/ hectar	

2.1.1.3 Quality

Seed shall conform to FS JJJ-S-181. Weed seed shall not exceed 1 percent by weight of the total mixture. 2 percent maximum other corp and/or inert. Restricted noxious not to exceed 40 per kilogram. Must be free of prohibited noxious. Wet, moldy, or otherwise damaged seed shall be rejected.

2.1.1.4 Seed Mixing

The field mixing of seed shall be performed on site in the presence of the Contracting Officer.

2.1.2 Soil Amendments

Soil amendments shall consist of lime, fertilizer, organic soil amendments and soil conditioners meeting the following requirements.

2.1.2.1 Lime

Lime shall be agricultural limestone and shall have a minimum calcium carbonate equivalent of 90 percent and shall be ground to such a fineness that at least 90 percent will pass a 2 mm sieve and at least 50 percent will pass a 250 µm sieve.

2.1.2.2 Fertilizer

Fertilizer shall be commercial grade, free flowing, uniform in composition and conforming to FS O-F-241. Fertilizer: Consists of nitrogen-phosphorus-potassium ratio: 10 percent nitrogen, 20 percent phosphorus, and 20 percent potassium. Fertilizer shall be balanced with the inclusion of trace minerals and nutrients.

2.1.2.3 Organic Soil Amendments

a. Topsoil: The topsoil shall be delivered. Delivered topsoil shall conform to topsoil requirements specified in Paragraph 1.4.1.2, herein, and shall be amended as recommended by soil test.

b. Rotted Manure: Well rotted, horse, cattle or chicken manure containing a maximum 25 percent by volume of straw, sawdust, or other bedding materials, free of weeds and weed seeds, stones, sticks, soil and containing no chemicals or ingredients harmful to plants.

c. Decomposed Wood Derivatives: Ground bark, sawdust, or other wood waste material free of weeds and weed seeds, stones, sticks, soil, and toxic substances harmful to plants, fully composted a minimum of 6 months or stabilized with nitrogen and having the following properties:

Particle Size: Minimum percent by weight passing:

Screen Size	Percent
4.75 mm screen	95
3.35 mm screen	80

Nitrogen Content: Minimum percent based on dry weight:

Material	Percent
Redwood Sawdust	0.5
Fir Sawdust	0.7
Fir or Pine Bark	1.0

d. Calcined Clay: Granular particles produced from montmorillonite clay calcined to minimum temperature of 645 degrees Celsius to the following gradation: minimum 90 percent passing 2.36 mm screen, 99 percent retained on 250 µm screen and maximum 2 percent passing 150 µm screen. Bulk density: maximum 640 kilograms per m^3.

e. Recycled sewage sludge or yard waste: Recycled compost product made with (a) wastewater (sludge and septage) and discarded brush, yard waste, leaves, grass, or other demolished debris that is environmentally and hygienically safe; (b) 100 percent composted yard waste; (c) 100 percent composted sewage sludge; (d) or Composted sewage sludge/sawdust.

f. Rock Phosphate: Rock phosphate shall contain a minimum of 18-30 percent phosphorous with a minimum of 3 percent initial availability, commercially packaged and free flowing.

g. Worm Castings: Worm castings shall be screened from worms and food source and commercially packaged.

2.1.2.4 Soil Conditioner

Soil conditioner shall be for single use or in combination to meet requirements for topsoil. Gypsum shall be commercially packaged, free flowing, minimum 95 percent calcium sulfate by volume. Green sand shall be a potash-based exchange mineral commercially packaged, free flowing, and shall contain 7-8 percent total potash, 1-2 percent phosphorous and 22 trace minerals.

2.1.3 Mulch

Mulch shall be free from weeds, mold, and other deleterious materials.

2.1.3.1 Wood Cellulose Fiber

Wood cellulose fiber shall not contain any growth or germination-inhibiting factors and shall be dyed an appropriate color to facilitate visual metering during application. Composition on air-dry weight basis: 9 to 15 percent moisture, pH range from 4.5 to 6.0.

2.1.3.2 Wood Chips

Wood chips shall be chips or shredded bark with maximum particle size of 5 mm.

2.1.3.3 Paper Fiber Mulch

Paper fiber mulch shall be 95 percent high grade news print that is shredded for the purpose of mulching seed. Moisture content shall be 9 percent or lower. Paper fiber mulch surfactants and defoamers during loading and application.

2.1.4 Water

Water shall be the responsibility of the Contractor unless otherwise noted. Water shall not contain elements toxic to plant life.

2.1.5 Pesticide

Pesticide shall be insecticide, herbicide, fungicide, nematocide, rodenticide and miticide. For the purpose of this specification, soil fumigant shall have the same requirements as a pesticide. The pesticide material shall be EPA registered and approved insecticide, herbicide, fungicide, nematocide, rodenticide, miticide, and soil fumigant.

PART 3 EXECUTION

3.1 SEEDING TIMES AND CONDITIONS

3.1.1 Seeding Time

Seed shall be sown during non-freezing season and at a time to promote successful turf establishment.

3.1.2 Turfing Conditions

Turf operations shall be performed only during periods when beneficial results can be obtained. When drought, frozen ground, excessive moisture or other unsatisfactory conditions prevail, the work shall be stopped when directed. When special conditions warrant a variance to the turf operations, proposed times shall be submitted to and approved by the Contracting Officer.

3.2 SITE PREPARATION

3.2.1 Finished Grade and Topsoil

The Contracting Officer shall verify that elevations are as indicated on drawings and the rough grading has been completed in accordance with Section 02300 GRADING. All existing vegetation, other than trees shown to be protected and preserved, shall be removed from within the construction limits prior to placing of topsoil and soil preparation for seeding. Prior to placing topsoil over compacted or impermeable soils, thoroughly till areas to a minimum depth of 50 mm by scarifying, disking, harrowing or other approved methods. A total topsoil depth of 100 mm shall be applied by the Contractor as follows: Spread topsoil evenly a minimum depth of 50 mm and till into the top 100 mm of existing soil. A second 50 mm layer of topsoil shall be spread and tilled into the top 100 mm to 150 mm of previously amended soil. The total amended and tilled depth of soil shall be 150 mm to 200 mm. Do not spread topsoil when frozen or excessively wet or dry. Protect topsoiled areas from damage by vehicular or pedestrian traffic.

3.2.2 Application of Soil Amendments

3.2.2.1 Soil Test

A soil test shall be performed as described in paragraph 1.3, SUBMITTALS, Certificates to establish the quantities and type of soil amendments required to meet local growing conditions for the type and variety of turf specified.

3.2.2.2 Lime

Lime shall be applied at the rate recommended by the soil test. Lime shall be incorporated into the soil to a minimum depth of 100 mm or may be incorporated as part of the tillage operation.

3.2.2.3 Fertilizer

Fertilizer shall be applied at the rate to provide 0.5 kilograms of actual nitrogen per 100 square meters. Fertilizer shall be incorporated into the soil to a minimum depth of 100 mm or may be incorporated as part of the tillage or hydroseeding operation.

3.2.2.4 Soil Conditioner

Soil Conditioner shall be spread uniformly over the soil to a minimum depth of as recommended by soil test and thoroughly incorporated by tillage into the soil to a minimum depth of 100 mm.

3.2.3 Tillage

3.2.3.1 Minimum Depth

Soil on slopes gentler than 3-horizontal-to-1-vertical shall be tilled to a minimum depth of 100 mm. On slopes between 3-horizontal-to-1-vertical and 1-horizontal-to-1 vertical, the soil shall be tilled to a minimum depth of 50 mm by scarifying with heavy rakes, or other method. Rototillers shall be used where soil conditions and length of slope permit. On slopes 1-horizontal-to-1 vertical and steeper, no tillage is required.

3.2.4 Finished Grading

3.2.4.1 Preparation

Turf areas compacted by construction operations shall be completely pulverized by tillage and smooth graded. Turf areas shall be filled as needed or have surplus soil removed to attain the finished grade. Soil used for repair of erosion or grade deficiencies shall conform to topsoil requirements specified herein. Drainage patterns shall be maintained as indicated on drawings. Finished grade shall be 25 mm below the adjoining grade of any surfaced area. Turf areas shall be smooth graded and blended to existing areas.

3.2.4.2 Seeded Area Debris

Seeded areas shall have debris and stones larger than 25 mm in any dimension removed from the surface.

3.2.4.4 Protection

Finished graded areas shall be protected from damage by vehicular or pedestrian traffic and erosion.

3.3 SEEDING

3.3.1 General

Prior to seeding, any previously prepared seedbed areas compacted or damaged by interim rain, traffic or other cause, shall be reworked to restore the ground condition previously specified. Seeding operations shall not take place when the wind velocity will prevent uniform seed distribution.

3.3.2 Equipment Calibration

The equipment to be used and the methods of turfing shall be subject to the inspection and approval of the Contracting Officer prior to commencement of turfing operations. Immediately prior to the commencement of turfing operations, the Contractor shall conduct turfing equipment calibration tests in the presence of the Contracting Officer.

3.3.3 Applying Seed

3.3.3.1 Broadcast Seeding

Seed shall be uniformly broadcast at the rate specified above using broadcast seeders. Half of seed shall be broadcast in one direction, and the remainder at right angles to the first direction. Seed shall be covered to an average depth of 6 mm by disk harrow, steel mat drag, cultipacker, or other approved device.

3.3.3.2 Drill Seeding

Seed shall be uniformly drilled to an average depth of 13 mm and at the rate specified above using equipment having drills not more than 163 mm apart. Row markers shall be used with the drill seeder.

3.3.3.3 Rolling

Immediately after seeding, except for slopes 3-horizontal-to-1 vertical and greater, the entire area shall be firmed with a roller not exceeding 90 pounds for each foot of roller width. Areas seeded with seed drills equipped with rollers shall not be rolled.

3.3.4 Hydroseeding

Seed and fertilizer shall be added to water and thoroughly mixed at the rates specified above. Wood cellulose fiber mulch shall be added at the rates recommended by the manufacturer but not to exceed 2,245 kilograms per hectar after the seed, fertilizer and water have been thoroughly mixed, to produce a homogeneous slurry. Slurry shall be uniformly applied under pressure over the entire area. The hydroseeded area shall not be rolled.

3.3.5 Mulch

3.3.5.1 Wood Cellulose Fiber/Recycled Paper Mulch

Wood cellulose fiber mulch or recycled paper mulch for use with the hydraulic application of seed and fertilizer shall be applied as part of the hydroseeding operation.

3.3.6 Water

Watering shall be started within 7 days after completing the seeded area. Water shall be applied at a rate of 40 mm of water per week and at sufficient intervals to ensure moist soil conditions to a minimum depth of 25 mm and to prevent seeded area from drying out completely. Run-off and puddling shall be prevented.

3.5 APPLICATION OF PESTICIDE

When pesticide becomes necessary to remove a pest or disease, a state-certified applicator shall apply required pesticides in accordance with EPA label restrictions and recommendations. Hydraulic equipment shall be provided for the liquid application of pesticides with a leak-proof tank, positive agitation methods, controlled application pressure and metering gauges. A pesticide plan shall be provided to the Contracting Officer as stated in paragraph SUBMITTALS.

3.6 RESTORATION AND CLEAN UP

3.6.1 Restoration

Existing turf areas, pavements and facilities that have been damaged from the turfing operation shall be restored to original condition at Contractor's expense.

3.6.2 Clean Up

Excess and waste material shall be removed from the planting operation and shall be disposed of off the site. Adjacent paved areas shall be cleaned.

3.7 PROTECTION OF TURFED AREAS

Immediately after turfing, the area shall be protected against traffic or other use by erecting barricades and providing signage as required, or as directed by the Contracting Officer.

3.8 TURF ESTABLISHMENT PERIOD

3.8.1 Commencement

The Turf Establishment Period for establishing a healthy stand of turf shall begin on the first day of work under this contract and shall end three (3) months after the last day of turfing operations required by this contract or after turf areas have been mowed at least twice, whichever is longer. Written calendar time period shall be furnished to the Contracting Officer for the Turf Establishment Period. When there is more than one turf establishment period, describe the boundaries of the turfed area covered for each period.

3.8.2 Satisfactory Stand of Turf

3.8.2.1 Seeded Area

A satisfactory stand of turf from the seeding operation for a lawn area is defined as a minimum of 15 grass plants per square foot. Bare spots shall be no larger than 150 mm square. The total bare spots shall not exceed 2 percent of the total seeded area.

3.8.2 Maintenance During Establishment Period

3.8.2.1 General

Maintenance of the turfed areas shall include eradicating weeds, eradicating insects and diseases, protecting embankments and ditches from erosion, maintaining erosion control materials and mulch, protecting turfed areas from traffic, mowing, watering, and post-fertilization.

3.8.2.2 Mowing

Turf areas shall be mowed to a minimum height of 38 mm when the average height of the turf becomes 75 mm. Clippings shall be removed when the amount of cut turf is heavy enough to damage the turfed areas. All seeded turf areas shall be mowed at least twice during the Turf Establishment Period.

3.8.2.3 Watering

Watering shall be applied at a rate of 40 mm of water per week and at sufficient intervals to obtain a moist soil condition to a minimum depth of 25 mm. Frequency of watering and quantity of water shall be adjusted in accordance with the growth of the turf and the occurrence of natural rainfall. Run-off, puddling and wilting shall be prevented.

3.8.2.4 Pesticide

Treatment for disease or pest shall be in accordance with paragraph APPLICATION OF PESTICIDE.

3.8.2.5 Repair

The Contractor shall re-establish as specified herein, eroded, damaged or barren areas. Mulch shall also be repaired or replaced as required.

3.8.2.6 Maintenance Report

A written record shall be furnished to the Contracting Officer of the maintenance work performed.

3.9 FINAL ACCEPTANCE

3.9.1 Preliminary Inspection

Prior to the completion of the Turf Establishment Period, a preliminary inspection shall be held by the Contracting Officer. Time for the inspection shall be established in writing. The acceptability of the turf in accordance with the Turf Establishment Period shall be determined. An unacceptable stand of turf shall be repaired as soon as turfing conditions permit.

3.9.2 Final Inspection

A final inspection shall be held by the Contracting Officer to determine that deficiencies noted in the preliminary inspection have been corrected. Time for the inspection shall be established in writing.

END OF SECTION

This page intentionally blank

SECTION 02922

SODDING

PART 1 GENERAL

1.1 REFERENCES

AMERICAN SOCIETY FOR TESTING AND MATERIALS (ASTM)

ASTM C 602	(1995a) Agricultural Liming Materials
ASTM D 4972	(1995a) pH of Soils
ASTM D 5268	(1992; R 1996) Topsoil Used for Landscaping Purposes

1.2 SUBMITTALS

Government approval is required for submittals with a "GA" designation; submittals having an "FIO" designation are for information only. The following shall be submitted in accordance with Section 01330 SUBMITTAL PROCEDURES:

SD-01 Data

Equipment; FIO. Chemical Treatment Material; FIO.

Manufacturer's literature including physical characteristics, application and installation instructions for equipment and chemical treatment material.

SD-07 Schedules

Equipment; FIO.

A listing of equipment to be used for the sodding operation.

SD-08 Statements

Delivery; FIO.

Delivery schedule.

Finished Grade and Topsoil; FIO.

Finished grade status.

Topsoil; FIO.

Availability of topsoil from the stripping and stock piling operation.

SD-09 Reports

Equipment Calibration; FIO.

Certification of calibration tests conducted on the equipment used in the sodding operation.

Soil Test for Existing and Delivered Topsoil; FIO.

Certified reports of inspections and laboratory tests, prepared by an independent testing agency, including analysis, interpretation of test results, and recommendations. Each report shall be properly identified. Test methods used and compliance with recognized test standards shall be described.

SD-13 Certificates

Sod; FIO. Topsoil; FIO. pH Adjuster; FIO. Fertilizer; FIO. Organic Material; FIO. Soil Conditioner; FIO. Pesticide; FIO.

Prior to the delivery of materials, certificates of compliance attesting that materials meet the specified requirements. Certified copies of the material certificates shall include the following:

a. Sod. Classification, botanical name, common name, mixture percentage of species, percent purity, quality grade, field location and state certification.

b. Topsoil. Particle size, pH, organic matter content, textural class, soluble salts, chemical and mechanical analyses. Recommended amendments and fertilizer shall also be included.

c. pH Adjuster. Calcium carbonate equivalent and sieve analysis.

d. Fertilizer. Chemical analysis and composition percent.

e. Organic Material: Composition and source.

f. Soil Conditioner: Composition and source.

g. Pesticide. EPA registration number and registered uses.

SD-14 Samples

Delivered Topsoil; FIO.

Samples taken from several locations at the source.

Soil Amendments; FIO.

A 4.5 kilogram sample.

Sod Establishment Period; GA.

Calendar time period for the sod establishment period. When there is more than one sod establishment period, the boundaries of the sodded area covered for each period shall be described.

Maintenance Record; FIO.

Maintenance work performed, area repaired or reinstalled, diagnosis for unsatisfactory stand of grass plants.

Application of Pesticide; FIO.

Pesticide treatment plan with sequence of treatment work with dates and times. The pesticide trade name, EPA registration number, chemical composition, formulation, concentration of original and diluted material, application rate of active ingredients, method of application, area treated, amount applied; and the name and state license number of the state certified applicator shall be included.

1.3 SOURCE INSPECTION

The sources of sod material and delivered topsoil shall be subject to inspection.

1.4 DELIVERY, INSPECTION, STORAGE, AND HANDLING

1.4.1 Delivery

A delivery schedule shall be provided at least 10 calendar days prior to the first day of delivery.

1.4.1.1 Sod

Sod shall be protected during delivery to prevent desiccation, internal heat buildup, or contamination.

1.4.1.2 Delivered Topsoil

Prior to the delivery of any topsoil, its availability shall be verified in paragraph TOPSOIL. A soil test shall be provided for topsoil delivered to the site.

1.4.1.3 Soil Amendments

Soil amendments shall be delivered to the site in the original, unopened containers bearing the manufacturer's chemical analysis. In lieu of containers, soil amendments may be furnished in bulk. A chemical analysis shall be provided for bulk deliveries.

1.4.1.4 Pesticides

Pesticide material shall be delivered to the site in the original, unopened containers bearing legible labels indicating the EPA registration number and the manufacturer's registered uses.

1.4.2 Inspection

Sod shall be inspected upon arrival at the job site for conformity to species. Sod shall be checked for visible broadleaf weeds, and a visible consistency with no obvious patches of foreign grasses that exceed 2 percent of the canopy. Sod that is heating up, dry, moldy, yellow, irregularly shaped, torn, or of uneven thickness shall be rejected. Other materials shall be inspected for compliance with specified requirements. Open soil amendment containers or wet soil amendments; topsoil that contains slag, cinders, stones, lumps of soil, sticks, roots, trash or other material over a minimum 40 mm diameter; and topsoil that contains viable plants and plant parts, shall be rejected. Unacceptable materials shall be removed from the job site.

1.4.3 Storage

1.4.3.1 Sod

Sod shall be stored in designated areas and kept in a moist condition by watering with a fine mist, and covered with moist burlap, straw, or other covering. Covering shall allow air to circulate, preventing internal heat from building up. Sod shall be protected from exposure to wind and direct sunlight until installed.

1.4.3.2 Other Material Storage

Materials shall be stored in designated areas. Lime and fertilizer shall be stored in cool, dry locations, away from contaminants. Chemical treatment material shall be stored according to manufacturer's instructions and not with sod operation materials.

1.4.4 Handling

Sod shall not be damaged during handling. Except for bulk deliveries, materials shall not be dropped or dumped from vehicles.

1.4.5 Time Limitation

Time limitation between harvesting and installing sod shall be a maximum 36 hours.

PART 2 PRODUCTS

2.1 SOD

2.1.1 Sod Classification

State-certified sod shall be provided as classified by applicable state laws. Sod section shall be sized to permit rolling and lifting without breaking.

2.1.2 Grass Species

Grass species shall be proportioned as follows:

Botanical Name	Common Name	Mixture Percent
Poa pratensis	Improved Kentucky Dwarf-type Bluegrass (3 min. blended cultivars)	100%

2.1.3 Quality

Sod shall be relatively free of thatch, diseases, nematodes, soil-borne insects, weeds or undesirable plants, stones larger than 25 mm in diameter, woody plant roots, and other materials detrimental to a healthy stand of grass plants. Broadleaf weeds and patches of foreign grasses shall be a maximum 2 percent of the sod section.

2.1.4 Thickness

Sod shall be machine cut to a minimum 35 mm thickness. Measurement for thickness shall exclude top growth and thatch.

2.1.5 Anchors

Sod anchors shall be as recommended by the sod supplier.

2.1.6 Substitutions

Substitutions will not be allowed without written request and approval from the Contracting Officer.

2.2 TOPSOIL

Topsoil shall be as defined in ASTM D 5268. When available, the topsoil shall be the existing surface soil stripped and stockpiled onsite in accordance with Section 02300 EARTHWORK. A soil test shall be performed to ensure topsoil material meets the specification prior to delivery and installation. When additional topsoil is required beyond the available topsoil from stripping operation, topsoil shall be delivered and amended as recommended by the soil test for the sod species specified.

Topsoil shall be a mix containing approximately 70 percent sandy loam and 30 percent organic material. The sandy loam shall be as described by the USDA textural class and shall have a maximum particle size of 6.3 mm, 70-75 percent passing a 2.0 mm screen, 35-55 percent passing a .425 mm screen, and 5-25 percent passing a .075 mm screen. Topsoil shall contain 15-30 percent organic matter as determined by the organic carbon 6A chemical analysis method described in the USDA soil investigation report No. 1. Topsoil shall be obtained from well drained areas and shall not contain more than 5 percent water by volume. Topsoil shall be free from slag, cinders, stones, lumps of soil, sticks, roots, trash, or other material over a maximum 40 mm diameter. Topsoil shall be free from viable plants

and plant parts. Topsoil shall be free from debris, noxious weeds, toxic substances or any other material that may be harmful to plant growth. The pH shall be between 5.5 and 7.5. Soluble salts shall not exceed 600 ppm (or 4mmhos). Blow sand shall not be acceptable.

2.3 SOIL AMENDMENTS

Soil amendments shall consist of pH adjuster, fertilizer, organic material, and soil conditioners meeting the following requirements. Vermiculite shall not be used.

2.3.1 pH Adjuster

The pH adjuster shall be an agricultural liming material in accordance with ASTM C 602. These materials may be burnt lime, hydrated lime, ground limestone, or shells. The pH adjuster shall be used to create a favorable soil pH for the plant material specified.

2.3.1.1 Limestone

Limestone material shall contain a minimum calcium carbonate equivalent of 80 percent. Gradation: A minimum 95 percent shall pass through a 2.36 mm sieve and a minimum 55 percent shall pass through a 0.250 mm sieve. To raise soil pH, ground limestone shall be used.

2.3.1.2 Hydrated Lime

Hydrated lime shall contain a minimum calcium carbonate equivalent of 110 percent. Gradation: A minimum 100 percent shall pass through a 2.36 mm sieve and a minimum 97 percent shall pass through a 0.250 mm sieve.

2.3.2 Fertilizer

It shall be as recommended by the soil test. The nutrients ratio shall be 10 percent nitrogen, 20 percent phosphorus, and 20 percent potassium. Fertilizer shall be controlled release commercial grade, free flowing, uniform in composition, and consist of a nitrogen-phosphorus-potassium ratio. The fertilizer shall be derived from sulfur coated urea, urea formaldehyde, plastic or polymer coated pills, or isobutylenediurea (IBDU). Fertilizer shall be balanced with the inclusion of trace minerals and micro-nutrients.

2.3.4 Organic Material

Organic material shall consist of either bone meal, rotted manure, decomposed wood derivatives, recycled compost, or worm castings.

2.3.4.1 Bone meal

Bone meal shall be finely ground, steamed bone product containing from 2 to 4 percent nitrogen and 16 to 40 percent phosphoric acid.

2.3.4.2 Rotted Manure

Rotted manure shall be unleached horse, chicken or cattle manure containing a maximum 25 percent by volume straw, sawdust, or other bedding materials. Manure shall contain no chemicals or ingredients harmful to plants. The manure shall be heat treated to kill weed seeds and be free of stones, sticks, and soil.

2.3.4.3 Decomposed Wood Derivatives

Decomposed wood derivatives shall be ground bark, sawdust, yard trimmings, or other wood waste material free of stones, sticks, soil, and toxic substances harmful to plants, fully composted or stabilized with nitrogen.

2.3.4.4 Recycled Compost

Compost shall be a well decomposed, stable, weed free organic matter source. Compost shall be derived from food; agricultural or industrial residuals; biosolids (treated sewage sludge); yard trimmings; or source-separated or mixed solid waste. The compost shall possess no objectionable odors and shall not resemble the raw material from which it was derived. The material shall not contain substances toxic to plants. Gradation: The compost material shall pass through a 10 mm screen, possess a pH of 5.5 to 8.0, and have a moisture content between 35-55 percent by weight. The material shall not contain more than 1 percent or less by weight of man-made foreign matter. Compost shall be cleaned of plastic materials larger than 50 mm in length.

2.3.4.5 Worm Castings

Worm castings shall be screened from worms and food source, and shall be commercially packaged.

2.3.5 Soil Conditioner

Soil conditioner shall be sand, super absorbent polymers, calcined clay, or gypsum for use singly or in combination to meet the requirements for topsoil.

2.3.5.1 Sand

Sand shall be clean and free of toxic materials. Gradation: A minimum 95 percent by weight shall pass a 2 mm sieve and a minimum 10 percent by weight shall pass a 1.18 mm sieve. Greensand shall be balanced with the inclusion of trace minerals and nutrients.

2.3.5.2 Super Absorbent Polymers

To improve water retention in soils, super absorbent polymers shall be sized and applied according to the manufacturer's recommendations. Polymers shall be added as a soil amendment and be cross-linked polyacrylamide with an absorption capacity of 250-400 times its weight.

2.3.5.3 Calcined Clay

Calcined clay shall be granular particles produced from montmorillonite clay calcined to minimum temperature of 650 degrees C. Gradation: A minimum 90 percent passing 2.36 mm sieve; a minimum 99 percent shall be retained on a 0.250 mm sieve; and a maximum 2 percent shall pass a 0.150 mm sieve. Bulk density: A maximum 640 kilogram per cubic meter .

2.3.5.4 Gypsum

Gypsum shall be commercially packaged, free flowing, and a minimum 95 percent calcium sulfate by volume.

2.4 WATER

Water shall be the responsibility of the Contractor unless otherwise noted. Water shall not contain elements toxic to plant life.

2.5 PESTICIDE

Pesticide shall be insecticide, herbicide, fungicide, nematocide, rodenticide or miticide. For the purpose of this specification, a soil fumigant shall have the same requirements as a pesticide. The pesticide material shall be EPA registered and approved.

PART 3 EXECUTION

3.1 INSTALLING SOD TIME AND CONDITIONS

3.1.1 Sodding Time

Sod shall be installed during non-freezing season and at a time to promote successful turf establishment.

3.1.2 Sodding Conditions

Sodding operations shall be performed only during periods when beneficial results can be obtained. When drought, excessive moisture or other unsatisfactory conditions prevail, the work shall be stopped when directed. When special conditions warrant a variance to the sodding operations, proposed alternate times shall be submitted for approval.

3.1.3 Equipment Calibration

Immediately prior to the commencement of sodding operations, calibration tests shall be conducted on the equipment to be used. These tests shall confirm that the equipment is operating within the manufacturer's specifications and will meet the specified criteria. The equipment shall be calibrated a minimum of once every day during the operation. Provide calibration test results within one week of testing.

3.1.4 Soil Test

Delivered topsoil, existing soil in smooth graded areas, and stockpiled topsoil shall be tested in accordance with ASTM D 5268 and ASTM D 4972 for determining the particle size, pH, organic matter content, textural class, chemical analysis, soluble salts analysis, and mechanical analysis. Sample collection on site shall be random over the entire site. Sample collection for stockpiled topsoil shall be at different levels in the stockpile. The soil shall be free from debris, noxious weeds, toxic substances, or other materials harmful to plant growth. The test shall determine the quantities and type of soil amendments required to meet local growing conditions for the sod species specified.

3.2 SITE PREPARATION

3.2.1 Finished Grade and Topsoil

Prior to the commencement of the sodding operation, the Contractor shall verify that finished grades are as indicated on drawings and the subgrade compaction and rough grading have been completed in accordance with Section 02300 EARTHWORK. All existing vegetation, other than trees shown to be protected and preserved, shall be removed from within the construction limits prior to placing of topsoil and soil preparation for seeding. Prior to placing topsoil over compacted or impermeable soils, thoroughly till areas to a minimum depth of 50 mm by scarifying, disking, harrowing or other approved methods. A total topsoil depth of 100 mm shall be applied by the Contractor as follows: Spread topsoil evenly a minimum depth of 50 mm and till into the top 100 mm of existing soil. A second 50 mm layer of topsoil shall be spread and tilled into the top 100 mm to 150 mm of previously amended soil. The total amended and tilled depth of soil shall be 150 mm to 200 mm. Do not spread topsoil when frozen or excessively wet or dry. Protect topsoiled areas from damage by vehicular or pedestrian traffic.

3.2.2 Application of Soil Amendments

3.2.2.1 Applying pH Adjuster

The pH adjuster shall be applied at the rate recommended by the soil test. The pH adjuster shall be incorporated into the soil to a maximum 100 mm depth or may be incorporated as part of the tillage operation.

3.2.2.2 Applying Fertilizer

The application rate shall be 0.5 kilograms per 100 square meter. Fertilizer shall be incorporated into the soil to a maximum 100 mm depth.

3.2.2.3 Applying Soil Conditioner

The soil conditioner shall be as recommended by the soil test. The soil conditioner shall be spread uniformly over the soil a minimum 25 mm depth and thoroughly incorporated by tillage into the soil to a maximum 100 mm depth.

3.2.2.4 Applying Super Absorbent Polymers

Polymers shall be spread uniformly over the soil as recommended by the manufacturer and thoroughly incorporated by tillage into the soil to a maximum 50 mm deep prior to placement of sod.

3.2.3 Tillage

Soil on slopes up to a maximum 3-horizontal-to-1-vertical shall be tilled to a minimum 100 mm deep. On slopes between 3-horizontal-to-1-vertical and 1-horizontal-to-1 vertical, the soil shall be tilled to a minimum 50 mm deep by scarifying with heavy rakes, or other method. Rototillers shall be used where soil conditions and length of slope permit. On slopes 1-horizontal-to-1 vertical and steeper, no tillage is required. Drainage patterns shall be maintained as indicated on drawings. Areas compacted by construction operations shall be completely pulverized by tillage. Soil used for repair of surface erosion or grade deficiencies shall conform to topsoil requirements. The pH adjuster, fertilizer, and soil conditioner may be applied during this procedure.

3.2.4 Prepared Surface

3.2.4.1 Preparation

The prepared surface shall be a maximum 25 mm below the adjoining grade of any surfaced area. New surfaces shall be blended to existing areas. The prepared surface shall be rolled and completed with a light raking to remove from the surface debris and stones over a minimum 16 mm in any dimension.

3.2.4.2 Protection

Areas within the prepared surface shall be protected from compaction or damage by vehicular or pedestrian traffic and surface erosion.

3.3 INSTALLATION

Prior to installing sod, any previously prepared surface compacted or damaged shall be reworked to meet the requirements of paragraph SITE PREPARATION. Areas shall be sodded as indicated. Adequate soil moisture shall be ensured prior to sodding by spraying water on the area to be sodded and wetting the soil to a maximum 25 mm depth.

3.3.1 Installing Sod

Rows of sod sections shall be placed parallel to and tightly against each other. Joints shall be staggered laterally. The sod sections shall not be stretched or overlapped. All joints shall be butted tight. Voids and air drying of roots shall be prevented. Sod sections shall be laid across the slope on long slopes. Sod sections shall be laid at right angles to the flow of water in ditches. Sod sections shall be anchored on slopes steeper than 3-horizontal-to-1-vertical. Anchoring may be required when surface weight or pressure upon placed sod sections is anticipated to cause lateral movement. Sod anchors shall be placed a minimum 600 mm on center with a minimum 2 anchors per sod section.

3.3.2 Finishing

Displacement of the sod shall be prevented by tamping or rolling the sod in place and knitting the sod to the soil. Air pockets shall be eliminated and a true and even surface shall be provided. Frayed edges shall be trimmed, and holes or missing corners shall be patched with sod.

3.3.3 Rolling

The entire area shall be firmed with a roller not exceeding 130 kilograms per meter roller width. Slopes over a maximum 3-horizontal-to-1 vertical shall not be rolled.

3.3.4 Watering Sod

Watering shall be started immediately after completing each day of installing sod. Water shall be applied at least 3 times per week to supplement rainfall, at a rate sufficient to ensure moist soil conditions to a minimum depth of 25 mm . Run-off, puddling, and wilting shall be prevented. Unless otherwise directed, watering trucks shall not be driven over turf areas. Watering of other adjacent areas or plant material shall be prevented.

3.4.1 Soil Amendments, Tillage and Watering

When soil amendments have not been applied to the area, the quantity of 1/2 of the required soil amendments shall be applied and the area tilled in accordance with paragraph SITE PREPARATION. The area shall be watered in accordance with paragraph Watering Sod as required.

3.4.2 Remaining Soil Amendments

The remaining soil amendments shall be applied in accordance with the paragraph Tillage when the surface is prepared for installing sod.

3.5 QUANTITY CHECK

For materials provided in bags, the empty bags shall be retained for recording the amount used. For materials provided in bulk, the weight certificates shall be retained as a record of the amount used. The amount of the material used shall be compared with the total area covered to determine the rate of application. The quantity of sod used shall be compared against the total area established with sod. Differences between the quantity applied and the quantity specified shall be adjusted as directed.

3.6 APPLICATION OF PESTICIDE

When application of a pesticide becomes necessary to remove a pest or disease, a pesticide treatment plan shall be submitted and coordinated with the installation pest management program.

3.6.1 Technical Representative

The certified installation pest management coordinator shall be the technical representative, and shall be present at all meetings concerning treatment measures for pest or disease control. They may be present during treatment application.

3.6.2 Application

A state certified applicator shall apply required pesticides in accordance with EPA label restrictions and recommendations. Clothing and personal protective equipment shall be used as specified on the pesticide label. A closed system is recommended as it prevents the pesticide from coming into contact with the applicator or other persons. Water for formulating shall only come from designated locations. Filling hoses shall be fitted with a backflow preventer meeting local plumbing codes or standards. Overflow shall be prevented during the filling operation. Prior to each day of use, the equipment used for applying pesticide shall be inspected for leaks, clogging, wear, or damage. Any repairs are to be performed immediately.

3.7 RESTORATION AND CLEAN UP

3.7.1 Restoration

Existing turf areas, pavements, and facilities that have been damaged from the sodding operation shall be restored to original condition at Contractor's expense.

3.7.2 Clean Up

Excess and waste material shall be removed from the sodded areas and shall be disposed offsite. Adjacent paved areas shall be cleaned.

3.8 PROTECTION OF INSTALLED AREAS

Immediately upon completion of the sodding operation in an area, the area shall be protected against traffic or other use by erecting barricades and providing temporary signage as required, or as directed.

3.9 SOD ESTABLISHMENT PERIOD

3.9.1 Commencement

The sod establishment period to obtain a healthy stand of grass plants shall begin on the first day of work under this contract and shall end 3 months after the last day of sodding operation. Written calendar time period shall be furnished for the sod establishment period. When there is more than 1 sod establishment period, the boundaries of the sodded area covered for each period shall be described. The sod establishment period should be coordinated with Sections 02811 IRRIGATION SPRINKLER SYSTEMS and 02930 EXTERIOR PLANTING. The sod establishment period shall be modified for inclement weather, shut down periods, or for separate completion dates of areas.

3.9.2 Satisfactory Stand of Grass Plants

Grass plants shall be evaluated for species and health. A satisfactory stand of grass plants from the sodding operation shall be living sod uniform in color and leaf texture. Individual bare spots shall not exceed 50 mm square. The total area of bare spots shall not exceed 5% of the total sodded area. Joints between sod pieces shall be tight and free from weeds and other undesirable growth.

3.9.3 Maintenance During Establishment Period

Maintenance of the sodded areas shall include eradicating weeds, insects and diseases; protecting embankments and ditches from surface erosion; maintaining erosion control materials and mulch; protecting installed areas from traffic; mowing; watering; and post-fertilization.

3.9.3.1 Mowing

Sodded areas shall be mowed to a minimum 60 mm height when the turf is a maximum 100 mm height. Clippings shall be removed when the amount cut prevents sunlight from reaching the ground surface. The sodded areas shall be mowed at least two times during the establishment period.

3.9.3.2 Post-Fertilization

The application rate shall be .025 kilograms per 100 square meter. A maximum 4 kilograms per hectare of actual available nitrogen shall be provided to the grass plants. The application shall be timed prior to the advent of winter dormancy and shall be made without burning the installed grass plants.

3.9.3.3 Pesticide Treatment

Treatment for disease or pest shall be in accordance with paragraph APPLICATION OF PESTICIDE.

3.9.3.4 Repair

Unsatisfactory stand of grass plants shall be repaired or reinstalled, and eroded areas shall be repaired in accordance with paragraph SITE PREPARATION.

3.9.3.5 Maintenance Record

A record of each site visit shall be furnished which describes the maintenance work performed; areas repaired or reinstalled; and diagnosis for unsatisfactory stand of grass plants.

END OF SECTION

This page intentionally blank

SECTION 02930

EXTERIOR PLANTING

PART 1 GENERAL

1.1 REFERENCES

The publications listed below form a part of this specification to the extent referenced. The publications are referred to in the text by basic designation only.

AMERICAN NURSERY AND LANDSCAPE ASSOCIATION (ANLA)

ANLA ANSI/ANLA Z60.1	(1996) American Standard for Nursery Stock

AMERICAN NATIONAL STANDARDS INSTITUTE (ANSI)

ANSI A300	(1995) Tree Care Operations - Trees, Shrubs and other Woody Plant Maintenance

AMERICAN SOCIETY FOR TESTING AND MATERIALS (ASTM)

ASTM C 602	(1995a) Agricultural Liming Materials
ASTM D 4972	(1995a) pH of Soils
ASTM D 5034	(1995) Breaking Strength and Elongation of Textile Fabrics (Grab Test)
ASTM D 5035	(1995) Breaking Strength and Elongation of Textile Fabrics (Grab Test)
ASTM D 5268	(1992; R1996) Topsoil Used for Landscaping Purposes

1.2 SUBMITTALS

Government approval is required for submittals with a "GA" designation; submittals having an "FIO" designation are for information only. The following shall be submitted in accordance with Section 01330 SUBMITTAL PROCEDURES:

SD-01 Data

Geotextile; FIO. Chemical Treatment Material; FIO.

Manufacturer's literature including physical characteristics, application and installation instructions for geotextile and chemical treatment material.

SD-07 Schedules

Equipment; FIO.

A listing of equipment to be used for the planting operation.

SD-08 Statements

Delivery; FIO.

Delivery schedule.

Finished Grade, Topsoil and Underground Utilities; FIO.

Finished grade status; location of underground utilities and facilities; and availability of topsoil from the stripping and stock piling operation.

SD-09 Reports

Soil Test for Existing and Delivered Topsoil; FIO. Percolation Test; FIO.

Certified reports of inspections and laboratory tests, prepared by an independent testing agency, including analysis, interpretation of test results, and recommendations. Each report shall be properly identified. Test methods used and compliance with recognized test standards shall be described.

SD-13 Certificates

Plant Material; FIO. Topsoil; FIO. pH Adjuster; FIO. Fertilizer; FIO. Organic Material; FIO. Soil Conditioner; FIO. Organic Mulch; FIO. Mycorrhizal Fungi Inoculum; FIO. Pesticide; FIO.

Prior to delivery of materials, certificates of compliance attesting that materials meet the specified requirements. Certified copies of the material certificates shall include the following.

a. Plant Material: Classification, botanical name, common name, size, quantity by species, location where grown, and warranty period.

b. Topsoil: Particle size, pH, organic matter content, textural class, soluble salts, chemical and mechanical analyses. Recommended amendments and fertilizer shall also be included.

c. pH Adjuster: Sieve analysis and calcium carbonate equivalent.

d. Fertilizer: Chemical analysis and composition percent.

e. Organic Material: Composition and source.

f. Soil Conditioner: Composition and source.

g. Organic Mulch: Composition, source, and treatment against fungi growth.

h. Mycorrhizal Fungi Inoculum: Plant material treated.

i. Pesticide. EPA registration number and registered uses.

SD-14 Samples

Delivered Topsoil; FIO.

Samples taken from several locations at the source.

Soil Amendments; FIO.

A 4.5 kilogram sample.

Mulch; FIO.

A 4.5 kilogram sample.

Geotextile; FIO.

A 150 mm square sample.

SD-18 Records

Plant Establishment Period; GA.

Calendar time period for the plant establishment period. When there is more than one establishment period, the boundaries of the planted areas covered for each period shall be described.

Maintenance Record; FIO.

Maintenance work performed, quantity of plant losses, and replacements; and diagnosis of unhealthy plant material.

Application of Pesticide; FIO.

Pesticide treatment plan with sequence of treatment work with dates and times. The pesticide trade name, EPA registration number, chemical composition, formulation, concentration of original and diluted material, application rate of active ingredients, method of application, area treated, amount applied; and the name and state license number of the state certified applicator shall be included.

SD-19 Operation and Maintenance Manuals

Maintenance Instructions; FIO.

Instruction for year-round care of installed plant material.

1.3 SOURCE INSPECTIONS

The nursery or source of plant material and the source of delivered topsoil shall be subject to inspection.

1.4 DELIVERY, INSPECTION, STORAGE, AND HANDLING

1.4.1 Delivery

A delivery schedule shall be provided at least 10 calendar days prior to the first day of delivery.

1.4.1.1 Plant Material Identification

Plant material shall be identified with attached, durable, waterproof labels and weather-resistant ink, stating the correct botanical plant name and size.

1.4.1.2 Protection During Delivery

Plant material shall be protected during delivery to prevent desiccation and damage to the branches, trunk, root system, or earth ball. Branches shall be protected by tying-in. Exposed branches shall be covered during transport.

1.4.1.3 Delivered Topsoil

Prior to the delivery of any topsoil, the availability of topsoil shall be verified in paragraph TOPSOIL. A soil test shall be provided for delivered topsoil.

1.4.1.4 Soil Amendments

Soil amendments shall be delivered to the site in the original, unopened containers bearing the manufacturer's chemical analysis. In lieu of containers, soil amendments may be furnished in bulk. A chemical analysis shall be provided for bulk deliveries.

1.4.1.5 Pesticide Material

Pesticide material shall be delivered to the site in the original, unopened containers bearing legible labels indicating the Environmental Protection Agency (EPA) registration number and the manufacturer's registered uses.

1.4.2 Inspection

Plant material shall be well shaped, vigorous and healthy with a healthy, well branched root system, free from disease, harmful insects and insect eggs, sun-scald injury, disfigurement or abrasion. Plant material shall be checked for unauthorized substitution and to establish nursery grown status. Plant material showing desiccation, abrasion, sun-scald injury, disfigurement, or unauthorized substitution shall be rejected. The plant material shall exhibit typical form of branch to height ratio; and meet the caliper

and height measurements specified. Plant material that measures less than specified, or has been poled, topped off or headed back, shall be rejected. Container-grown plant material shall show new fibrous roots and the root mass shall contain its shape when removed from the container. Plant material with broken or cracked balls; or broken containers shall be rejected. Bare-root plant material that is not dormant or is showing roots were pulled from the ground shall be rejected. Other materials shall be inspected for compliance with paragraph PRODUCTS. Open soil amendment containers or wet soil amendments shall be rejected. Topsoil that contains slag, cinders, stones, lumps of soil, sticks, roots, trash or other material larger than 40 mm diameter shall be rejected. Topsoil that contains viable plant material and plant parts shall be rejected. Unacceptable material shall be removed from the job site.

1.4.3 Storage

1.4.3.1 Plant Material Storage

Plant material not installed on the day of arrival at the site shall be stored and protected in designated areas. Plant material shall not be stored longer than 30 days. Plant material shall be protected from direct exposure to wind and sun. Bare-root plant material shall be heeled-in. All plant material shall be kept in a moist condition by watering with a fine mist spray until installed.

1.4.3.2 Other Material Storage

Storage of other material shall be in designated areas. Soil amendments shall be stored in dry locations and away from contaminants. Chemical treatment material shall be stored according to manufacturer's instructions and not with planting operation material.

1.4.4 Handling

Plant material shall not be injured in handling. Cracking or breaking the earth ball of balled and burlapped plant material shall be avoided. Plant material shall not be handled by the trunk or stems. Materials shall not be dropped from vehicles.

1.4.5 Time Limitation

Except for container-grown plant material, the time limitation from digging to installing plant material shall be a maximum 90 days. The time limitation between installing the plant material and placing the mulch shall be a maximum 48 hours.

1.5 WARRANTY

Furnished plant material shall have a warranty for plant growth to be in a vigorous growing condition for a minimum 12 month period. A minimum 12 month calendar time period for the warranty of plant growth shall be provided regardless of the contract time period. When plant material is determined to be dead/unhealthy in accordance with paragraph PLANT ESTABLISHMENT PERIOD, it shall be replaced once under this warranty. Written calendar time period shall be furnished by the Contractor. Warranty shall begin on the first day of substantial completion.

PART 2 PRODUCTS

2.1 PLANT MATERIAL

2.1.1 Plant Material Classification

The plant material shall be nursery grown stock conforming to ANLA ANSI/ANLA Z60.1 and shall be the species specified.

2.1.2 Plant Schedule

The plant schedule shall provide botanical names as included in one or more of the publications listed under "Nomenclature" in ANLA ANSI/ANLA Z60.1.

2.1.3 Substitutions

Substitutions will not be permitted without written request and approval from the Contracting Officer.

2.1.4 Quality

Well shaped, well grown, vigorous plant material having healthy and well branched root systems in accordance with ANLA ANSI/ANLA Z60.1 shall be provided. Plant material shall be provided free from disease, harmful insects and insect eggs, sun-scald injury, disfigurement and abrasion. Plant material shall be free of shock or damage to branches, trunk, or root systems, which may occur from the digging and preparation for shipment, method of shipment, or shipment. Plant quality is determined by the growing conditions; method of shipment to maintain health of the root system; and growth of the trunk and crown as follows.

2.1.5 Growing Conditions

Plant material shall be native to or well-suited to the growing conditions of the project site. Plant material shall be grown under climatic conditions similar to those at the project site.

2.1.6 Method of Shipment to Maintain Health of Root System

2.1.6.1 Balled and Burlapped (BB) Plant Material

Ball size and ratio shall be in accordance with ANLA ANSI/ANLA Z60.1. The ball shall be of a diameter and depth to encompass enough fibrous and feeding root system necessary for the full recovery of the plant. The plant stem or trunk shall be centered in the ball. All roots shall be clean cut at the ball surface. Roots shall not be pulled from the ground. Before shipment the root ball shall be dipped in gels containing mycorrhizal fungi inoculum. The root ball shall be completely wrapped with burlap or other suitable material and securely laced with biodegradable twine.

2.1.6.5 Container-Grown (C) Plant Material

Container size shall be in accordance with ANLA ANSI/ANLA Z60.1. Plant material shall be grown in a container over a duration of time for new fibrous roots to have developed and for the root mass to

retain its shape and hold together when removed from the container. Container-grown plant material shall be inoculated with mycorrhizal fungi during germination in the nursery. Before shipment the root system shall be dipped in gels containing mycorrhizal fungi inoculum. The container shall be sufficiently rigid to hold ball shape and protect root mass during shipping.

2.1.7 Growth of Trunk and Crown

2.1.7.1 Deciduous Trees

A height to caliper relationship shall be provided in accordance with ANLA ANSI/ANLA Z60.1. Height of branching shall bear a relationship to the size and species of tree specified and with the crown in good balance with the trunk. The trees shall not be "poled" or the leader removed.

a. Single stem: The trunk shall be reasonably straight and symmetrical with crown and have a persistent main leader.

b. Multi-stem: All countable stems, in aggregate, shall average the size specified. To be considered a stem, there shall be no division of the trunk which branches more than 150 mm from ground level.

c. Specimen: The tree provided shall be well branched and pruned naturally according to the species. The form of growth desired, which may not be in accordance with natural growth habit, shall be as indicated.

2.1.7.3 Deciduous Shrubs

Deciduous shrubs shall have the height and number of primary stems recommended by ANLA ANSI/ANLA Z60.1. Acceptable plant material shall be well shaped, with sufficient well-spaced side branches, and recognized by the trade as typical for the species grown in the region of the project.

2.1.7.4 Coniferous Evergreen Plant Material

Coniferous Evergreen plant material shall have the height-to-spread ratio recommended by ANLA ANSI/ANLA Z60.1. The coniferous evergreen trees shall not be "poled" or the leader removed. Acceptable plant material shall be exceptionally heavy, well shaped and trimmed to form a symmetrical and tightly knit plant. The form of growth desired shall be as indicated.

2.1.7.5 Broadleaf Evergreen Plant Material

Broadleaf evergreen plant material shall have the height-to-spread ratio recommended by ANLA ANSI/ANLA Z60.1. Acceptable plant material shall be well shaped and recognized by the trade as typical for the variety grown in the region of the project.

2.1.7.6 Ground Cover and Vine Plant Material

Ground cover and vine plant material shall have the minimum number of runners and length of runner recommended by ANLA ANSI/ANLA Z60.1. Plant material shall have heavy, well developed and balanced crown with vigorous, well developed root system and shall be furnished in containers.

2.1.8 Plant Material Size

Plant material shall be furnished in sizes indicated. Plant material larger in size than specified may be provided at no additional cost to the Government.

2.1.9 Plant Material Measurement

Plant material measurements shall be in accordance with ANLA ANSI/ANLA Z60.1.

2.2 TOPSOIL

Topsoil shall be as defined in ASTM D 5268. When available, the topsoil shall be the existing surface soil stripped and stockpiled onsite in accordance with Section 02300 EARTHWORK. Topsoil shall be free from slag, cinders, stones, lumps of soil, sticks, roots, trash or other material over a minimum 40 mm diameter. Topsoil shall be free from viable plants and plant parts. When additional topsoil is required beyond the available topsoil from the stripping operation, topsoil shall be delivered and amended as recommended by the soil test for the plant material specified. plant parts. Delivered topsoil shall conform to topsoil requirement specified in Section 02922 SODDING and shall be amended as recommended by soil tests for plants specified.

2.3 SOIL AMENDMENTS

Soil amendments shall consist of pH adjuster, fertilizer, organic material and soil conditioners meeting the following requirements. Vermiculite is not recommended.

2.3.1 pH Adjuster

The pH adjuster shall be an agricultural liming material in accordance with ASTM C 602. These materials may be burnt lime, hydrated lime, ground limestone, or shells. The pH adjuster shall be used to create a favorable soil pH for the plant material specified.

2.3.1.1 Limestone

Limestone material shall be agricultural limestone and shall contain a minimum calcium carbonate equivalent of 90 percent. Gradation: A minimum 95 percent shall pass through a 2.36 mm sieve and a minimum 5 percent shall pass through a 0.25 mm sieve.

2.3.2 Fertilizer

Fertilizer shall be controlled release commercial grade; free flowing, pellet or tablet form; uniform in composition; and consist of a nitrogen-phosphorus-potassium ratio of 20-10-5. The fertilizer shall be derived from sulfur coated urea, urea formaldehyde, plastic or polymer coated pills, or isobutylenediurea (IBDU). Fertilizer shall be balanced with the inclusion of trace minerals and micro-nutrients.

2.3.3 Organic Material

Organic material shall consist of either bone meal, rotted manure, decomposed wood derivatives, recycled compost, or worm castings.

2.3.3.1 Bone meal

Bone meal shall be a finely ground, steamed bone product containing from 2 to 4 percent nitrogen and 16 to 40 percent phosphoric acid.

2.3.3.2 Rotted Manure

Rotted manure shall be unleached horse, chicken, or cattle manure containing a maximum 25 percent by volume of straw, sawdust, or other bedding materials. Manure shall contain no chemicals or ingredients harmful to plants. The manure shall be heat treated to kill weed seeds and shall be free of stones, sticks, and soil.

2.3.3.3 Decomposed Wood Derivatives

Decomposed wood derivatives shall be ground bark, sawdust, or other wood waste material free of stones, sticks, and toxic substances harmful to plants, and stabilized with nitrogen.

2.3.3.4 Recycled Compost

Compost shall be a well decomposed, stable, weed free organic matter source. It shall be derived from food, agricultural, or industrial residuals; biosolids (treated sewage sludge); yard trimmings; or source-separated or mixed solid waste. The compost shall possess no objectionable odors and shall not resemble the raw material from which it was derived. The material shall not contain substances toxic to plants. Gradation: The compost material shall pass through a 10 mm screen, possess a pH of 5.5 to 8.0, and have a moisture content between 35-55 percent by weight. The material shall not contain more than 1 percent or less by weight of man-made foreign matter. Compost shall be cleaned of plastic materials larger than 50 mm in length.

2.3.3.5 Worm Castings

Worm castings shall be screened from worms and food source and shall be commercially packaged.

2.3.4 Soil Conditioner

Soil conditioner shall be sand, super absorbent polymers, calcined clay, or gypsum for single use or in combination to meet topsoil requirements for the plant material specified.

2.3.4.1 Sand

Sand shall be clean and free of toxic materials. Gradation: A minimum 95 percent by weight shall pass a 2 mm sieve and a minimum 10 percent by weight shall pass a 1.18 mm sieve. Greensand shall be balanced with the inclusion of trace minerals and nutrients.

2.3.4.2 Super Absorbent Polymers

To improve water retention in soils, super absorbent polymers shall be sized according to manufacturer's recommendations. Polymers shall be added as a soil amendment and be cross-linked polyacrylamide with an absorption capacity of 250-400 times its weight.

2.3.4.3 Calcined Clay

Granular particles shall be produced from montmorillonite clay calcined to minimum temperature of 650 degrees C. Gradation: A minimum 90 percent passing 2.36 mm sieve; a minimum 99 percent shall be retained on 0.25 mm sieve; and a maximum 2 percent shall pass a 0.15 mm sieve. Bulk density: A maximum 640 kilogram per cubic meter .

2.3.4.4 Gypsum

Gypsum shall be commercially packaged, free flowing, and a minimum 95 percent calcium sulfate by volume.

2.4 MULCH

Mulch shall be free from weeds, mold, and other deleterious materials. Mulch materials shall be native to the region. Rotted manure is not recommended to be used as a mulch because it would encourage surface rooting of the plant material and weeds.

2.4.1 Inorganic Mulch

Inorganic mulch shall be provided in areas designated, and consist of:

a. washed river rock ranging in size from 50 mm to 75 mm.

b. clean gravel ranging in size from 25 mm to 38 mm.

2.5 GEOTEXTILE (WEED BARRIER FABRIC)

Geotextile shall be woven or nonwoven; polypropylene, polyester, or fiberglass, mat in accordance with ASTM D 5034 or ASTM D 5035. It shall be made specifically for use as a fabric around plant material. Nominal weight shall be a minimum 120 grams per square meter . Permeability rate shall be a minimum 1 mm per second.

2.6 WOOD STAKING MATERIAL

Wood stakes shall be hardwood or fir; rough sawn; free from knots, rot, cross grain, or other defects that would impair their strength.

2.6.1 Bracing Stake

Wood bracing stakes shall be a minimum 50 x 50 mm square and a minimum 2400 mm long with a point at one end. Stake shall be set without damaging rootball.

2.6.2 Wood Ground Stakes

Wood ground stakes shall be a minimum of 50 x 50 mm square and a minimum 900 mm long with a point at one end.

2.7.4 Guying Material

Metal guying material shall be a minimum 12 gauge wire. Multi-strand cable shall be woven wire. Guying material tensile strength shall conform to the size of tree to be held firmly in place.

2.7.5 Turnbuckle

Metal turnbuckles shall be galvanized or cadmium-plated steel, and shall be a minimum 75 mm long with closed screw eyes on each end. Screw thread tensile strength shall conform to the size of tree to be held firmly in place.

2.8 DELETED

2.9 RUBBER GUYING MATERIAL

Rubber chafing guards, consisting of recycled material, shall be used to protect tree trunks and branches when metal guying material is applied. The material shall be the same color throughout the project. Length shall be a minimum 1.5 times the circumference of the plant trunk at its base.

2.10 FLAG

Plastic flag material shall be used on guying material. It shall be a minimum 150 mm long. Tape color shall be consistent and visually complimentary to the entire project area. The tape color shall meet pedestrian visual safety requirements for day and night.

2.12 MYCORRHIZAL FUNGI INOCULUM

Mycorrhizal fungi inoculum shall be composed of multiple-fungus inoculum as recommended by the manufacturer for the plant material specified.

2.13 WATER

Unless otherwise directed, water shall be the responsibility of the Contractor. Water shall not contain elements toxic to plant life.

2.14 PESTICIDE

Pesticide shall be insecticide, herbicide, fungicide, nematocide, rodenticide or miticide. For the purpose of this specification a soil fumigant shall have the same requirements as a pesticide. The pesticide material shall be EPA registered and approved.

2.15 CONCRETE MOW EDGE

Concrete mow edge shall be provided to separate lawn and shrub planted areas as indicated on the drawings.

2.16 PLASTIC EDGING

Plastic edging shall be black flexible polyethylene, approximately 125 mm high with a 25 mm diameter top bead for enabling connection of edging sections. Edging shall be supplied with anchor stakes and connectors for complete installation.

PART 3 EXECUTION

3.1 INSTALLING PLANT MATERIAL TIME AND CONDITIONS

3.1.1 Deciduous Plant Material Time

Deciduous plant material shall be installed from 30 April to 30 Sept.

3.1.2 Evergreen Plant Material Time

Evergreen plant material shall be installed from 30 March to 30 Oct.

3.1.3 Plant Material Conditions

Planting operations shall be performed only during periods when beneficial results can be obtained. When drought, excessive moisture, frozen ground or other unsatisfactory conditions prevail, the work shall be stopped when directed. When special conditions warrant a variance to the planting operations, proposed planting times shall be submitted for approval.

3.1.4 Tests

3.1.4.1 Percolation Test

Test for percolation shall be done to determine positive drainage of plant pits and beds. A positive percolation shall consist of a minimum 25 mm per 3 hours; when a negative percolation test occurs, a shop drawing shall be submitted indicating the corrective measures.

3.1.4.2 Soil Test

Delivered topsoil, excavated plant pit soil, and stockpiled topsoil shall be tested in accordance with ASTM D 5268 and ASTM D 4972 for determining the particle size, pH, organic matter content, textural class, chemical analysis, soluble salts analysis, and mechanical analysis. Sample collection onsite shall be random over the entire site. Sample collection for stockpiled topsoil shall be at different levels in the stockpile. The soil shall be free from debris, noxious weeds, toxic substances, or other materials harmful to plant growth. The test shall determine the quantities and type of soil amendments required to meet local growing conditions for the plant material specified.

3.2 SITE PREPARATION

3.2.1 Finished Grade, Topsoil and Underground Utilities

The Contractor shall verify that finished grades are as indicated on drawings, and that the placing of topsoil, the smooth grading, and the compaction requirements have been completed in accordance with Section 02300 EARTHWORK, prior to the commencement of the planting operation. The location of underground utilities and facilities in the area of the planting operation shall be verified. Damage to underground utilities and facilities shall be repaired at the Contractor's expense.

3.2.2 Layout

Plant material locations and bed outlines shall be staked on the project site before any excavation is made. Plant material locations may be adjusted to meet field conditions.

3.2.3 Protecting Existing Vegetation

When there are established lawns in the planting area, the turf shall be covered and/or protected during planting operations. Existing trees, shrubs, and plant beds that are to be preserved shall be barricaded along the dripline to protect them during planting operations.

3.3 EXCAVATION

3.3.1 Obstructions Below Ground

When obstructions below ground affect the work, shop drawings showing proposed adjustments to plant material location, type of plant and planting method shall be submitted for approval.

3.3.2 Turf Removal

Where the planting operation occurs in an existing lawn area, the turf shall be removed from the excavation area to a depth that will ensure the removal of the entire root system.

3.3.3 Plant Pits

Plant pits for ball and burlapped or container plant material shall be dug to a depth equal to the height of the root ball as measured from the base of the ball to the base of the plant trunk. Plant pits for bare-root plant material shall be dug to a depth equal to the height of the root system. Plant pits shall be dug a minimum 50 percent wider than the ball or root system to allow for root expansion. The pit shall be constructed with sides sloping towards the base as a cone, to encourage well aerated soil to be available to the root system for favorable root growth. Cylindrical pits with vertical sides shall not be used.

3.4 INSTALLATION

3.4.1 Setting Plant Material

Plant material shall be set plumb and held in position until sufficient soil has been firmly placed around root system or ball. In relation to the surrounding grade, the plant material shall be set even with the grade at which it was grown.

3.4.3 Backfill Soil Mixture

The backfill soil mixture shall be a mix of 2 parts topsoil and 1 part on-site excavated soil.

3.4.4 Adding Mycorrhizal Fungi Inoculum

Mycorrhizal fungi inoculum shall be added as recommended by the manufacturer for the plant material specified.

3.4.5 Backfill Procedure

Prior to backfilling, all metal, wood, synthetic products, or treated burlap devices shall be removed from the ball or root system avoiding damage to the root system. The backfill procedure shall remove air pockets from around the root system. Additional requirements are as follows.

3.4.5.1 Balled and Burlapped Plant Material

Biodegradable burlap and tying material shall be carefully opened and folded back from the top a minimum 1/3 depth from the top of the root ball. Backfill mixture shall be added to the plant pit in 150 mm layers with each layer tamped.

3.4.5.3 Container-Grown Plant Material

The plant material shall be carefully removed from containers that are not biodegradable. Prior to setting the plant in the pit, a maximum 1/4 depth of the root mass, measured from the bottom, shall be spread apart to promote new root growth. For plant material in biodegradable containers the container shall be split prior to setting the plant with container. Backfill mixture shall be added to the plant pit in 150 mm layers with each layer tamped.

3.4.5.4 Earth Watering Basin

An earth watering basin, consisting of backfill soil mixture, shall be formed with a minimum 100 mm height around the edge of the plant pit to aid in water retention and to provide soil for settling adjustments.

3.4.6 Plant Bed

Plant material shall be set in plant beds according to the drawings. Backfill soil mixture shall be placed on previously scarified subsoil to completely surround the root balls, and shall be brought to a smooth and even surface, blending to existing areas. Earth watering basins shall be provided. Polymers shall

be spread uniformly over the plant bed and in the planting pit as recommended by the manufacturer and thoroughly incorporated into the soil to a maximum 100 mm depth.

3.4.7 Watering

Plant pits and plant beds shall be watered immediately after backfilling, until completely saturated.

3.4.8 Staking and Guying

Staking will be required when trees are over 2M in height, unstable or will not remain set due to their size, shape, or exposure to high wind velocity, unless noted otherwise on the drawings.

3.4.8.1 One Bracing Stake

Trees 1.2 to 1.8 m high shall be firmly anchored in place with one bracing stake. The bracing stake shall be placed on the side of the tree facing the prevailing wind. The bracing stake shall be driven vertically into firm ground and shall not injure the ball or root system. The tree shall be held firmly to the stake with a double strand of guying material. The guying material shall be firmly anchored at a minimum 1/2 tree height and shall prevent girdling. A chafing guard shall be used when metal is the guying material.

3.4.8.2 Two Bracing Stakes

Trees from 1.8 to 2.4 m height shall be firmly anchored in place with 2 bracing stakes placed on opposite sides. Bracing stakes shall be driven vertically into firm ground and shall not injure the ball or root system. The tree shall be held firmly between the stakes with a double strand of guying material. The guying material shall be firmly anchored at a minimum 1/2 tree height and shall prevent girdling. Chafing guards shall be used when metal is the guying material.

3.4.8.3 Three Ground Stakes

Trees over a minimum 2.4 m height and less than a maximum 150 mm caliper shall be held firmly in place with 3 bracing or ground stakes spaced equidistantly around the tree. Ground stakes shall be avoided in areas to be mowed. Stakes shall be driven into firm ground outside the earth watering basin. The guying material shall be firmly anchored at a minimum 1/2 tree height and shall prevent girdling. For trees over maximum 75 mm diameter at breast height, turnbuckles shall be used on the guying material for tree straightening purposes. One turnbuckle shall be centered on each guy line. Chafing guards shall be used when metal is the guying material.

3.4.8.4 Flags

A flag shall be securely fastened to each guy line equidistant between the tree and the stake, deadmen, or earth anchor. The flag shall be visible to pedestrians.

3.4.9 Concrete Mow Edge

Concrete mow edge shall be constructed as indicated on the drawings.

3.4.10 Plastic Edging

Plastic edging shall be installed in accordance with manufacturer’s recommendations.

3.5 FINISHING

3.5.1 Plant Material

Prior to placing mulch, the installed area shall be uniformly edged to provide a clear division line between the planted area and the adjacent turf area, shaped as indicated. The installed area shall be raked and smoothed while maintaining the earth watering basins.

3.5.2 Placing Geotextile (Weed Barrier Fabric)

Prior to placing mulch, geotextile shall be placed where indicated on the drawings and in accordance with the manufacturer's recommendations.

3.5.3 Placing Mulch

The placement of mulch shall occur a maximum 48 hours after planting. Mulch, used to reduce soil water loss, regulate soil temperature and prevent weed growth, shall be spread to cover the installed area with a minimum 75 mm uniform thickness. Mulch shall be kept out of the crowns of shrubs, ground cover, and vines and shall be kept off buildings, sidewalks and other facilities.

3.5.4 Pruning

Pruning shall be accomplished by trained and experienced personnel. The pruning of trees and palms shall be in accordance with ANSI A300. Only dead or broken material shall be pruned from installed plants. The typical growth habit of individual plant material shall be retained. Clean cuts shall be made flush with the parent trunk. Improper cuts, stubs, dead and broken branches shall be removed. "Headback" cuts at right angles to the line of growth will not be permitted. Trees shall not be poled or the leader removed, nor shall the leader be pruned or "topped off".

3.6 MAINTENANCE DURING PLANTING OPERATION

Installed plant material shall be maintained in a healthy growing condition. Maintenance operations shall begin immediately after each plant is installed to prevent desiccation and shall continue until the plant establishment period commences. Installed areas shall be kept free of weeds, grass, and other undesired vegetation. The maintenance includes maintaining the mulch, watering, and adjusting settling.

3.7 APPLICATION OF PESTICIDE

When application of a pesticide becomes necessary to remove a pest or disease, a pesticide treatment plan shall be submitted and coordinated with the installation pest management program.

3.7.1 Technical Representative

The certified installation pest management coordinator shall be the technical representative, and shall be present at all meetings concerning treatment measures for pest or disease control. They may be present during treatment application.

3.7.2 Application

A state certified applicator shall apply required pesticides in accordance with EPA label restrictions and recommendations. Clothing and personal protective equipment shall be used as specified on the pesticide label. A closed system is recommended as it prevents the pesticide from coming into contact with the applicator or other persons. Water for formulating shall only come from designated locations. Filling hoses shall be fitted with a backflow preventer meeting local plumbing codes or standards. Overflow shall be prevented during the filling operation. Prior to each day of use, the equipment used for applying pesticide shall be inspected for leaks, clogging, wear, or damage. Any repairs are to be performed immediately.

3.8 RESTORATION AND CLEAN UP

3.8.1 Restoration

Turf areas, pavements and facilities that have been damaged from the planting operation shall be restored to original condition at the Contractor's expense.

3.8.2 Clean Up

Excess and waste material shall be removed from the installed area and shall be disposed offsite. Adjacent paved areas shall be cleared.

3.9 PLANT ESTABLISHMENT PERIOD

3.9.1 Commencement

Upon completion of the last day of the planting operation, the plant establishment period for maintaining installed plant material in a healthy growing condition shall commence and shall be in effect for a minimum of 12 months. Written calendar time period shall be furnished by the Contractor for the plant establishment period. When there is more than one plant establishment period, the boundaries of the planted area covered for each period shall be described. The plant establishment period shall be coordinated with Sections 02922 SODDING; and 02811 IRRIGATION SPRINKLER SYSTEMS. The plant establishment period shall be modified for inclement weather shut down periods, or for separate completion dates for areas.

3.9.2 Maintenance During Establishment Period

Maintenance of plant material shall include straightening plant material, straightening stakes; tightening guying material; correcting girdling; supplementing mulch; pruning dead or broken branch tips; maintaining plant material labels; watering; eradicating weeds, insects and disease; post-fertilization; and removing and replacing unhealthy plants.

3.9.2.1 Watering Plant Material

The plant material shall be watered as necessary to prevent desiccation and to maintain an adequate supply of moisture within the root zone. An adequate supply of moisture is estimated to be the equivalent of 25 mm absorbed water per week, delivered in the form of rain or augmented by watering. Run-off, puddling and wilting shall be prevented. Unless otherwise directed, watering trucks shall not be driven over turf areas. Watering of other adjacent areas or existing plant material shall be prevented.

3.9.2.2 Weeding

Grass and weeds in the installed areas shall not be allowed to reach a maximum 75 mm height before being completely removed, including the root system.

3.9.2.3 Pesticide Treatment

Treatment for disease or pest shall be in accordance with paragraph APPLICATION OF PESTICIDE.

3.9.2.4 Post-Fertilization

The plant material shall be topdressed at least once during the period of establishment with controlled release fertilizer, reference paragraph SOIL AMENDMENTS. Apply at the rate of 1 kilogram per 10 square meters of plant pit or bed area. Dry fertilizer adhering to plants shall be flushed off. The application shall be timed prior to the advent of winter dormancy.

3.9.2.5 Plant Pit Settling

When settling occurs to the backfill soil mixture, additional backfill soil shall be added to the plant pit or plant bed until the backfill level is equal to the surrounding grade. Serious settling that affects the setting of the plant in relation to the maximum depth at which it was grown requires replanting in accordance with paragraph INSTALLATION. The earth watering basin shall be maintained.

3.9.2.6 Maintenance Record

A record shall be furnished describing the maintenance work performed, the quantity of plant losses, diagnosis of the plant loss, and the quantity of replacements made on each site visit.

3.9.3 Unhealthy Plant Material

A tree shall be considered unhealthy or dead when the main leader has died back, or up to a maximum 25 percent of the crown has died. A shrub shall be considered unhealthy or dead when up to a maximum 25 percent of the plant has died. This condition shall be determined by scraping on a branch an area 2 mm square, maximum, to determine if there is a green cambium layer below the bark. The Contractor shall determine the cause for unhealthy plant material and shall provide recommendations for replacement. Unhealthy or dead plant material shall be removed immediately and shall be replaced as soon as seasonal conditions permit.

3.9.4 Replacement Plant Material

Unless otherwise directed, plant material shall be provided for replacement in accordance with paragraph PLANT MATERIAL. Replacement plant material shall be installed in accordance with paragraph INSTALLATION, and recommendations in paragraph PLANT ESTABLISHMENT PERIOD. Plant material shall be replaced in accordance with paragraph WARRANTY. An extended plant establishment period shall not be required for replacement plant material.

3.9.5 Maintenance Instructions

Written instructions shall be furnished containing drawings and other necessary information for year-round care of the installed plant material; including, when and where maintenance should occur, and the procedures for plant material replacement.

END OF SECTION

This page intentionally blank

SECTION 03100

STRUCTURAL CONCRETE FORMWORK

PART 1 GENERAL

1.1 REFERENCES

The publications listed below form a part of this specification to the extent referenced. The publications are referred to in the text by basic designation only.

ACI INTERNATIONAL (ACI)

ACI 347R (1994) Guide to Formwork for Concrete

AMERICAN HARDBOARD ASSOCIATION (AHA)

AHA A135.4 (1995) Basic Hardboard

AMERICAN SOCIETY FOR TESTING AND MATERIALS (ASTM)

ASTM C 578 (1995) Rigid, Cellular Polystyrene Thermal Insulation

DEPARTMENT OF COMMERCE (DOC)

DOC PS 1 (1983) Construction and Industrial Plywood

1.2 SUBMITTALS

Government approval is required for submittals with a "GA" designation; submittals having an "FIO" designation are for information only. The following shall be submitted in accordance with SECTION: SUBMITTALS:

SD-01 Data

Design; FIO.

Design analysis and calculations for form design and methodology used in the design.

Concrete Formwork; FIO.

Manufacturer's data including literature describing form materials, accessories, and form releasing agents.

SD-04 Drawings

Concrete Formwork; FIO.

Drawings showing details of formwork including, dimensions of fiber voids, joints, supports, studding and shoring, and sequence of form and shoring removal.

SD-06 Instructions

Form Releasing Agents; FIO.

Manufacturer's recommendation on method and rate of application of form releasing agents.

SD-13 Certificates

Fiber Voids; FIO.

Certificates attesting that fiber voids conform to the specified requirements.

SD-14 Samples

Fiber Voids; FIO.

One sample unit of fiber voids prior to installation of the voids.

1.3 DESIGN

Formwork shall be designed in accordance with methodology of ACI 347R for anticipated loads, lateral pressures, and stresses. Forms shall be capable of producing a surface which meets the requirements of the class of finish specified in SECTION: 03300 CAST-IN-PLACE STRUCTURAL CONCRETE. Forms shall be capable of withstanding the pressures resulting from placement and vibration of concrete.

1.4 STORAGE AND HANDLING

Fiber voids shall be stored above ground level in a dry location. Fiber voids shall be kept dry until installed and overlaid with concrete.

PART 2 PRODUCTS

2.1 FORM MATERIALS

2.1.1 Forms For Class A and Class B Finish

Forms for Class A and Class B finished surfaces shall be plywood panels conforming to DOC PS 1, Grade B-B concrete form panels, Class I or II. Other form materials or liners may be used provided the smoothness and appearance of concrete produced will be equivalent to that produced by the plywood concrete form panels. Forms for round columns shall be the prefabricated seamless type.

2.1.2 Forms For Class C Finish

Forms for Class C finished surfaces shall be shiplap lumber; plywood conforming to DOC PS 1, Grade B-B concrete form panels, Class I or II; tempered concrete form hardboard conforming to AHA A135.4; other approved concrete form material; or steel, except that steel lining on wood sheathing shall not be used. Forms for round columns may have one vertical seam.

2.1.3 Forms For Class D Finish

Forms for Class D finished surfaces, except where concrete is placed against earth, shall be wood or steel or other approved concrete form material.

2.1.4 Retain-In-Place Metal Forms

Retain-in-place metal forms for concrete slabs and roofs shall be as specified in Section 05300 STEEL DECKING.

2.1.5 Pan-Form Units

Pan-form units for one-way or two-way concrete joist and slab construction shall be factory-fabricated units of the approximate section indicated. Units shall consist of steel or molded fiberglass concrete form pans. Closure units shall be furnished as required.

2.1.6 Form Ties

Form ties shall be factory-fabricated metal ties, shall be of the removable or internal disconnecting or snap-off type, and shall be of a design that will not permit form deflection and will not spall concrete upon removal. Solid backing shall be provided for each tie. Except where removable tie rods are used, ties shall not leave holes in the concrete surface less than 6 mm nor more than 25 mm deep and not more than 25 mm in diameter. Removable tie rods shall be not more than 38 mm in diameter.

2.1.7 Form Releasing Agents

Form releasing agents shall be commercial formulations that will not bond with, stain or adversely affect concrete surfaces. Agents shall not impair subsequent treatment of concrete surfaces depending upon bond or adhesion nor impede the wetting of surfaces to be cured with water or curing compounds.

2.1.8 Fiber Voids

Fiber voids shall be the product of a reputable manufacturer regularly engaged in the commercial production of fiber voids. The voids shall be constructed of double faced, corrugated fiberboard. The corrugated fiberboard shall be fabricated of wet strength paper, impregnated with paraffin, and laminated with moisture resistant adhesive, and shall have a board strength of 20 kg per square centimeter. Voids which are impregnated with paraffin after construction, in lieu of being constructed with paraffin impregnated fiberboard, are acceptable. Voids shall be designed to support not less than 4900 kg per square meter. To prevent separation during concrete placement fiber voids shall be assembled with steel or plastic banding at 1.22 meters on center maximum, or by adequate stapling or gluing as recommended by the manufacturer. Fiber voids placed under concrete slabs and that are 200 mm in depth may be heavy duty "waffle box" type, constructed of paraffin impregnated corrugated fiberboard.

2.2 FIBER VOID RETAINERS

2.2.1 Polystyrene Rigid Insulation

Polystyrene rigid insulation shall conform to ASTM C 578, Type V, VI, or VII, square edged. Size shall be 38 mm thick by 400 mm in height by 1 meter in length, unless otherwise indicated.

2.2.2 Precast Concrete

Precast concrete units shall have a compressive strength of not less than 17 MPa, reinforced with 150 mm by 150 mm by W1.4 WWF wire mesh, and 300 mm (height) by 1 m (length) by 40 mm (thickness) in size unless indicated.

PART 3 EXECUTION

3.1 INSTALLATION

3.1.1 Formwork

Forms shall be mortar tight, properly aligned and adequately supported to produce concrete surfaces meeting the surface requirements specified in SECTION: 03300 CAST-IN-PLACE STRUCTURAL CONCRETE and conforming to construction tolerance given in TABLE 1. Where concrete surfaces are to have a Class A or Class B finish, joints in form panels shall be arranged as approved. Where forms for continuous surfaces are placed in successive units, care shall be taken to fit the forms over the completed surface so as to obtain accurate alignment of the surface and to prevent leakage of mortar. Forms shall not be reused if there is any evidence of surface wear and tear or defects which would impair the quality of the surface. Surfaces of forms to be reused shall be cleaned of mortar from previous concreting and of all other foreign material before reuse. Form ties that are to be completely withdrawn shall be coated with a nonstaining bond breaker.

3.1.2 Fiber Voids

Voids shall be placed on a smooth firm dry bed of suitable material so as not to be displaced vertically and shall be set tight, with no buckled cartons, in order that horizontal displacement cannot take place. Each section of void shall have its ends sealed by dipping in paraffin, with any additional cutting of voids at the jobsite to be field dipped in the same type of sealer, unless liners and flutes are completely impregnated with paraffin. Prior to placing reinforcement, the entire formed area for slabs shall be covered with a 1.22 m by 2.44 m minimum flat sheets of fiber void corrugated fiberboard. Joints shall be sealed with a moisture resistant tape having a minimum width of 75 mm. If voids are destroyed or damaged for any reason and are not capable of supporting the design load, they shall be replaced prior to placing of concrete.

3.1.3 Fiber Void Retainers

Fiber void retainers shall be installed, continuously, on both sides of fiber voids placed under grade beams in order to retain the cavity after the fiber voids biodegrade.

3.2 CHAMFERING

Except as otherwise shown, external corners that will be exposed shall be chamfered, beveled, or rounded by moldings placed in the forms.

3.3 COATING

Forms for Class A and Class B finished surfaces shall be coated with a form releasing agent before the form or reinforcement is placed in final position. The coating shall be used as recommended in the manufacturer's printed or written instructions. Forms for Class C and D finished surfaces may be wet with water in lieu of coating immediately before placing concrete, except that in cold weather with probable freezing temperatures coating shall be mandatory. Surplus coating on form surfaces and coating on reinforcing steel and construction joints shall be removed before placing concrete.

3.4 REMOVAL OF FORMS

Forms shall be removed in a manner that will prevent injury to the concrete and ensure the complete safety of the structure. Formwork for columns, walls, side of beams and other parts not supporting the weight of concrete may be removed when the concrete has attained sufficient strength to resist damage from the removal operation but not before at least 24 hours has elapsed since concrete placement. Supporting forms and shores shall not be removed from beams, floors and walls until the structural units are strong enough to carry their own weight and any other construction or natural loads. In no case will supporting forms or shores be removed before the concrete strength has reached 70 percent of design strengths as determined by field cured cylinders or other approved methods. This strength shall be demonstrated by job-cured test specimens, and by a structural analysis considering the proposed loads in relation to these test strengths and the strength of forming and shoring system. The job-cured test specimens for form removal purposes shall be provided in numbers as directed and shall be in addition to those required for concrete quality control. The specimens shall be removed from molds at the age of 24 hours and shall receive, insofar as possible, the same curing and protection as the structures they represent.

TABLE 1

TOLERANCES FOR FORMED SURFACES

1. Variations from the plumb:	In any 3 m of length	6 mm
a. In the lines and surfaces of columns, piers, walls and in arises	Maximum for entire length	25 mm
b. For exposed corner columns, control-joint grooves, and other conspicuous lines	In any 6 m of length	6 mm
	Maximum for entire length	13 mm
2. Variation from the level or from the grades indicated on the drawings:	In any 3 m of length	6 mm
	In any bay or in any 6 m of length	10 mm
a. In slab soffits, ceilings, beam soffits, and in arises, measured before removal of supporting shores	Maximum for entire length	20 mm
b. In exposed lintels, sills, parapets, horizontal grooves, and other conspicuous lines	In any bay or in any 6 m of length	6 mm
	Maximum for entire length	13 mm
3. Variation of the linear building lines from established position in plan	In any 6 m	13 mm
	Maximum	25 mm
4. Variation of distance between walls, columns, partitions	6 mm per 3 m of distance, but not more than 13 mm in any one bay, and not more than 25 mm total variation	
5. Variation in the sizes and locations of sleeves, floor openings, and wall opening	Minus	6 mm
	Plus	13 mm
6. Variation in cross-sectional dimensions of columns and beams and in the thickness of slabs and walls	Minus	6 mm
	Plus	13 mm

7. Footings:

a. Variation of dimensions in plan — Minus ---------- 13 mm
Plus ---------- 50 mm
when formed or plus 75 mm when placed against unformed excavation

TABLE 1 (CONTINUED)

b. Misplacement of eccentricity — 2 percent of the footing width in the direction of misplacement but not more than ---------- 50 mm

c. Reduction in thickness of specified thickness — Minus ---------- 5 percent

8. Variation in steps: — Riser ---------- 3 mm

a. In a flight of stairs — Tread ---------- 6 mm

b. In consecutive steps — Riser ---------- 2 mm
Tread ---------- 3 mm

SECTION 03150

EXPANSION JOINTS, CONTRACTION JOINTS, AND WATERSTOPS

PART 1 GENERAL

1.1 REFERENCES

The publications listed below form a part of this specification to the extent referenced. The publications are referred to in the text by basic designation only.

AMERICAN HARDBOARD ASSOCIATION (AHA)

AHA A135.4	(1995) Basic Hardboard

AMERICAN SOCIETY FOR TESTING AND MATERIALS (ASTM)

ASTM A 109	(1993) Steel, Strip, Carbon, Cold-Rolled
ASTM A 167	(1993) Stainless and Heat-Resisting Chromium-Nickel Steel Plate, Sheet, and Strip
ASTM A 480	(1996) General Requirements for Flat-Rolled Stainless and Heat-Resisting Steel Plate, Sheet, and Strip
ASTM A 570	(1995) Steel, Sheet and Strip, Carbon, Hot-Rolled, Structural Quality
ASTM B 152	(1994) Copper Sheet, Strip, Plate, and Rolled Bar
ASTM B 370	(1992) Copper Sheet and Strip for Building Construction
ASTM C 919	(1984; R 1992) Standard Practice for Use of Sealants in Acoustical Applications
ASTM C 920	(1994) Elastomeric Joint Sealants
ASTM D 412	(1992) Vulcanized Rubber and Thermoplastic Rubbers and Thermoplastic Elastomers - Tension
ASTM D 471	(1995) Rubber Property - Effect of Liquids
ASTM D 1190	(1994) Concrete Joint Sealer, Hot-Poured Elastic Type
ASTM D 1191	(1984; R 1994) Test Methods for Concrete Joint Sealers
ASTM D 1751	(1983; R 1991) Preformed Expansion Joint Filler for Concrete Paving and Structural Construction (Nonextruding and Resilient Bituminous Types)

ASTM D 1752	(1984; R 1992) Preformed Sponge Rubber and Cork Expansion Joint Fillers for Concrete Paving and Structural Construction
ASTM D 1854	(1974; R 1990) Jet-Fuel-Resistant Concrete Joint Sealer, Hot-Poured Elastic Type
ASTM D 1855	(1989) Test Method for Jet-Fuel Resistant Concrete Joint Sealer, Hot-Poured Elastic Type
ASTM D 2628	(1991) Preformed Polychloroprene Elastomeric Joint Seals for Concrete Pavements
ASTM D 2835	(1989; R 1993) Lubricant for Installation of Preformed Compression Seals in Concrete Pavements
ASTM D 5249	(1992) Backer Material for Use With Cold and Hot-Applied Joint Sealants in Portland-Cement Concrete and Asphalt Joints

CORPS OF ENGINEERS (COE)

COE CRD-C 513	(1974) Corps of Engineers Specifications for Rubber Waterstops
COE CRD-C 572	(1974) Corps of Engineers Specifications for Polyvinylchloride Waterstops

1.2 SUBMITTALS

Government approval is required for submittals with a "GA" designation; submittals having an "FIO" designation are for information only. The following shall be submitted in accordance with Section 01330 SUBMITTAL PROCEDURES:

SD-01 Data

Preformed Expansion Joint Filler; FIO. Sealant; FIO. Waterstops; FIO.

Manufacturer's literature, including safety data sheets, for preformed fillers and the lubricants used in their installation; field-molded sealants and primers (when required by sealant manufacturer); preformed compression seals; and waterstops.

SD-04 Drawings

Waterstops; FIO.

Shop drawings and fabrication drawings provided by the manufacturer or prepared by the Contractor.

SD-06 Instructions

Preformed Expansion Joint Filler; FIO. Sealant; FIO. Waterstops; FIO.

Manufacturer's recommended instructions for installing preformed fillers, field-molded sealant; preformed compression seals; and waterstops; and for splicing non-metallic waterstops.

SD-13 Certificates

Preformed Expansion Joint Filler; FIO. Sealant; FIO. Waterstops; FIO.

Certificates of compliance stating that the joint filler and sealant materials and waterstops conform to the requirements specified.

SD-14 Samples

Preformed Compression Seals and Lubricants; FIO.

Specimens identified to indicate the manufacturer, type of material, size and quantity of material, and shipment or lot represented. Each sample shall be a piece not less than 3 m of 25 mm nominal width or wider seal or a piece not less than 4 m of compression seal less than 25 mm nominal width. One liter (quart) of lubricant shall be provided.

Field-Molded Sealant and Primer; FIO.

Four liters of field-molded sealant and one liter of primer (when primer is recommended by the sealant manufacturer) identified to indicate manufacturer, type of material, quantity, and shipment or lot represented.

Non-metallic Waterstops and Splices; FIO.

Specimens identified to indicate manufacturer, type of material, size, quantity of material, and shipment or lot represented. Each sample shall be a piece not less than 300 mm long cut from each 61 m of finished waterstop furnished, but not less than a total of 1 m of each type, size, and lot furnished. One splice sample of each size and type for every 50 splices made in the factory and every 10 splices made at the job site. The splice samples shall be made using straight run pieces with the splice located at the mid-length of the sample and finished as required for the installed waterstop. The total length of each splice shall be not less than 300 mm long.

1.3 DELIVERY AND STORAGE

Material delivered and placed in storage shall be stored off the ground and protected from moisture, dirt, and other contaminants. Sealants shall be delivered in the manufacturer's original unopened containers. Sealants whose shelf life has expired shall be removed from the site.

PART 2 PRODUCTS

2.1 CONTRACTION JOINT STRIPS

Contraction joint strips shall be 3 mm thick tempered hardboard conforming to AHA A135.4, Class 1. In lieu of hardboard strips, rigid polyvinylchloride (PVC) or high impact polystyrene (HIPS) insert strips specifically designed to induce controlled cracking in slabs on grade may be used. Such insert strips shall have removable top section.

2.2 PREFORMED EXPANSION JOINT FILLER

Expansion joint filler shall be preformed material conforming to ASTM D 1751 or ASTM D 1752. Unless otherwise indicated, filler material shall be 10 mm thick and of a width applicable for the joint formed. Backer material, when required, shall conform to ASTM D 5249.

2.3 SEALANT

Joint sealant shall conform to the following:

2.3.1 Preformed Polychloroprene Elastomeric Type

ASTM D 2628.

2.3.2 Lubricant for Preformed Compression Seals

ASTM D 2835.

2.3.3 Hot-Poured Type

ASTM D 1190 tested in accordance with ASTM D 1191.

2.3.4 Field Molded Type

ASTM C 920, Type M for horizontal joints or Type NS for vertical joints, Class 25, and Use NT. Bond breaker material shall be polyethylene tape, coated paper, metal foil or similar type materials. The back-up material shall be compressible, non-shrink, nonreactive with sealant, and non-absorptive material type such as extruded butyl or polychloroprene rubber.

2.3.5 Deleted

2.4 WATERSTOPS

Intersection and change of direction waterstops shall be shop fabricated.

2.4.1 Flexible Metal

Copper waterstops shall conform to ASTM B 152 and ASTM B 370, O60 soft anneal temper and 0.686 mm sheet thickness. Stainless steel waterstops shall conform to ASTM A 167 and ASTM A 480, UNS S30453 (Type 304L), and 0.9525 mm thick strip.

2.4.2 Rigid Metal

Flat steel waterstops shall conform to ASTM A 109, No. 2 (half hard) temper, No. 2 edge, No. 1 (matte or dull) finish or ASTM A 570, Grade 40.

2.4.3 Non-Metallic

Non-metallic waterstops shall be manufactured from a prime virgin resin;
reclaimed material is not acceptable. The compound shall contain plasticizers, stabilizers, and other additives to meet specified requirements. Rubber waterstops shall conform to COE CRD-C 513. Polyvinylchloride waterstops shall conform to COE CRD-C 572. Thermoplastic elastomeric rubber waterstops shall conform to ASTM D 471.

2.4.4 Non-Metallic Hydrophilic

Swellable strip type compound of polymer modified chloroprene rubber that swells upon contact with water shall conform to ASTM D 412 as follows: Tensile strength 2.9 MPa minimum; ultimate elongation 600 percent minimum. Hardness shall be 50 minimum on the type A durometer and the volumetric expansion ratio in distilled water at 20 degrees C shall be 3 to 1 minimum.

PART 3 EXECUTION

3.1 JOINTS

Joints shall be installed at locations indicated and as authorized.

3.1.1 Contraction Joints

Contraction joints may be constructed by inserting tempered hardboard strips or rigid PVC or HIPS insert strips into the plastic concrete using a steel parting bar, when necessary, or by cutting the concrete with a saw after concrete has set. Joints shall be approximately 3 mm wide and shall extend into the slab one-fourth the slab thickness, minimum, but not less than 25 mm.

3.1.1.1 Joint Strips

Strips shall be of the required dimensions and as long as practicable. After the first floating, the concrete shall be grooved with a tool at the joint locations. The strips shall be inserted in the groove and depressed until the top edge of the vertical surface is flush with the surface of the slab. The slab shall be floated and finished as specified. Working of the concrete adjacent to the joint shall be the minimum necessary to fill voids and consolidate the concrete. Where indicated, the top portion of the strip shall be sawed out after the curing period to form a recess for sealer. The removable section of PVC or HIPS strips shall be discarded and the insert left in place. Means shall be provided to insure true alignment of the strips is maintained during insertion.

3.1.1.2 Sawed Joints

Joint sawing shall be early enough to prevent uncontrolled cracking in the slab, but late enough that this can be accomplished without appreciable spalling. Concrete sawing machines shall be adequate in number and power, and with sufficient replacement blades to complete the sawing at the required rate. Joints shall be cut to true alignment and shall be cut in sequence of concrete placement. Sludge and cutting debris shall be removed.

3.1.2 Expansion Joints

Preformed expansion joint filler shall be used in expansion and isolation
joints in slabs around columns and between slabs on grade and vertical surfaces where indicated. The filler shall extend the full slab depth, unless otherwise indicated. The edges of the joint shall be neatly finished with an edging tool of 3 mm radius, except where a resilient floor surface will be applied. Where the joint is to receive a sealant, the filler strips shall be installed at the proper level below the finished floor with a slightly tapered, dressed and oiled wood strip temporarily secured to the top thereof to form a recess to the size shown on the drawings. The wood strip shall be removed after the concrete has set. Contractor may opt to use a removable expansion filler cap designed and fabricated for this purpose in lieu of the wood strip. The groove shall be thoroughly cleaned of laitance, curing compound, foreign materials, protrusions of hardened concrete, and any dust which shall be blown out of the groove with oil-free compressed air.

3.1.3 Joint Sealant

Sawed contraction joints and expansion joints in slabs shall be filled with joint sealant, unless otherwise shown. Joint surfaces shall be clean, dry, and free of oil or other foreign material which would adversely affect the bond between sealant and concrete. Joint sealant shall be applied as recommended by the manufacturer of the sealant.

3.1.3.1 Joints With Preformed Compression Seals

Compression seals shall be installed with equipment capable of installing joint seals to the prescribed depth without cutting, nicking, twisting, or otherwise distorting or damaging the seal or concrete and with no more than 5 percent stretching of the seal. The sides of the joint and, if necessary, the sides of the compression seal shall be covered with a coating of lubricant. Butt joints shall be coated with liberal applications of lubricant.

3.1.3.2 Joints With Field-Molded Sealant

Joints shall not be sealed when the sealant material, ambient air, or concrete temperature is less than 4 degrees C. When the sealants are meant to reduce the sound transmission characteristics of interior walls, ceilings, and floors the guidance provided in ASTM C 919 shall be followed. Joints requiring a bond breaker shall be coated with curing compound or with bituminous paint. Bond breaker and back-up material shall be installed where required. Joints shall be primed and filled flush with joint sealant in accordance with the manufacturer's recommendations.

3.2 WATERSTOPS, INSTALLATION AND SPLICES

Waterstops shall be installed at the locations shown to form a continuous water-tight diaphragm. Adequate provision shall be made to support and completely protect the waterstops during the progress of the work. Any waterstop punctured or damaged shall be repaired or replaced. Exposed waterstops shall be protected during application of form release agents to avoid being coated. Suitable guards shall be provided to protect exposed projecting edges and ends of partially embedded waterstops from damage when concrete placement has been discontinued. Splices shall be made by certified trained personnel using approved equipment and procedures.

3.2.1 Copper And Stainless Steel

Splices in copper waterstops shall be lap joints made by brazing. Splices in stainless steel waterstops shall be welded using a TIG or MIG process utilizing a weld rod to match the stainless. All welds shall be annealed to maintain physical properties. No carbon flame shall be used in the annealing process. Damaged waterstops shall be repaired by removing damaged portions and patching. Patches shall overlap a minimum of 25 mm onto undamaged portion of the waterstop.

3.2.2 Flat Steel

Splices in flat steel waterstops shall be properly aligned, butt welded, and cleaned of excessive material.

3.2.3 Non-Metallic

Fittings shall be shop made using a machine specifically designed to mechanically weld the waterstop. A miter guide, proper fixturing (profile dependant), and portable power saw shall be used to miter cut the ends to be joined to ensure good alignment and contact between joined surfaces. The splicing of straight lengths shall be done by squaring the ends to be joined. Continuity of the characteristic features of the cross section of the waterstop (ribs, tabular center axis, protrusions, etc.) shall be maintained across the splice.

3.2.3.1 Rubber Waterstop

Splices shall be vulcanized or shall be made using cold bond adhesive as recommended by the manufacturer. Splices for TPE-R shall be as specified for PVC.

3.2.3.2 Polyvinyl Chloride Waterstop

Splices shall be made by heat sealing the adjacent waterstop edges together using a thermoplastic splicing iron utilizing a non-stick surface specifically designed for waterstop welding. The correct temperature shall be used to sufficiently melt without charring the plastic. The spliced area, when cooled, shall show no signs of separation, holes, or other imperfections when bent by hand in as sharp an angle as possible.

3.2.3.3 Quality Assurance

Edge welding will not be permitted. Centerbulbs shall be compressed or closed when welding to non-centerbulb type. Waterstop splicing defects which are unacceptable include, but are not limited to the

following: 1) Tensile strength less than 80 percent of parent section. 2) Free lap joints. 3) Misalignment of centerbulb, ribs, and end bulbs greater than 2 mm. 4) Misalignment which reduces waterstop cross section more than 15 percent. 5) Bond failure at joint deeper than 2 mm or 15 percent of material thickness. 6) Misalignment of waterstop splice resulting in misalignment of waterstop in excess of 13 mm in 3 m. 7) Visible porosity in the weld area, including pin holes. 8) Charred or burnt material. 9) Bubbles or inadequate bonding. 10) Visible signs of splice separation when cooled splice is bent by hand at a sharp angle.

3.2.4 Non-Metallic Hydrophilic Waterstop Installation

Ends to be joined shall be miter cut with sharp knife or shears. The ends shall be adhered with cyanacryiate (super glue) adhesive. When joining hydrophilic type waterstop to PVC waterstop, the hydrophilic waterstop shall be positioned as shown on the drawings. A liberal amount of a single component hydrophilic sealant shall be applied to the junction to complete the transition.

3.3 CONSTRUCTION JOINTS

Construction joints are specified in Section 03300 CAST IN PLACE STRUCTURAL CONCRETE except that construction joints coinciding with expansion and contraction joints shall be treated as expansion or contraction joints as applicable.

END OF SECTION

SECTION 03200

CONCRETE REINFORCEMENT

PART 1 GENERAL

1.1 REFERENCES

The publications listed below form a part of this specification to the extent referenced. The publications are referred to in the text by basic designation only.

ACI INTERNATIONAL (ACI)

ACI 318/318R	(1995) Building Code Requirements for Structural Concrete and Commentary

AMERICAN SOCIETY FOR TESTING AND MATERIALS (ASTM)

ASTM A 53	(1995) Pipe, Steel, Black and Hot-Dipped, Zinc-Coated Welded and Seamless
ASTM A 82	(1995a) Steel Wire, Plain, for Concrete Reinforcement
ASTM A 184	(1990) Fabricated Deformed Steel Bar Mats for Concrete Reinforcement
~~ASTM A 185~~	~~(1994) Steel Welded Wire Fabric, Plain, for Concrete Reinforcement~~
~~ASTM A 497~~	~~(1995) Steel Welded Wire Fabric, Deformed, for Concrete Reinforcement~~
ASTM A 499	(1989) Steel Bars and Shapes, Carbon Rolled from "T" Rails
ASTM A 615	(1995b) Deformed and Plain Billet-Steel Bars for Concrete Reinforcement
ASTM A 675	(1990a) Steel Bars, Carbon, Hot-Wrought, Special Quality, Mechanical Properties
ASTM A 706	(1995b) Low-Alloy Steel Deformed Bars for Concrete Reinforcement
ASTM C 1116	(1991) Fiber-Reinforced Concrete and Shotcrete

AMERICAN WELDING SOCIETY (AWS)

AWS D1.4	(1992) Structural Welding Code - Reinforcing Steel

CONCRETE REINFORCING STEEL INSTITUTE (CRSI)

CRSI MSP-1	(1990) Manual of Standard Practice

1.2 SUBMITTALS

Government approval is required for submittals with a "GA" designation; submittals having an "FIO" designation are for information only. The following shall be submitted in accordance with SECTION: SUBMITTALS:

SD-04 Drawings

Concrete Reinforcement System; GA.

Detail drawings showing reinforcing steel placement, schedules, sizes, grades, and splicing and bending details. Drawings shall show support details including types, sizes and spacing.

SD-08 Statements

Qualifications; FIO.

A list of names of qualified welders.

SD-13 Certificates

Reinforcing Steel; FIO.

Certified copies of mill reports attesting that the reinforcing steel furnished meets the requirements specified, prior to the installation of reinforcing steel.

1.3 QUALIFICATIONS

Welders shall be qualified in accordance with AWS D1.4. Qualification test shall be performed at the worksite and the Contractor shall notify the Contracting Officer 24 hours prior to conducting tests. Special welding procedures and welders qualified by others may be accepted as permitted by AWS D1.4.

1.4 DELIVERY AND STORAGE

Reinforcement and accessories shall be stored off the ground on platforms, skids, or other supports.

PART 2 PRODUCTS

2.1 DOWELS

Dowels shall conform to ASTM A 675, Grade 80, or ASTM A 499. Steel pipe conforming to ASTM A 53, Schedule 80, may be used as dowels provided the ends are closed with metal or plastic inserts or with mortar.

2.2 FABRICATED BAR MATS

Fabricated bar mats shall conform to ASTM A 184.

2.3 REINFORCING STEEL

Reinforcing steel shall be deformed bars conforming to ASTM A 615 or ASTM A 706, grades and sizes as indicated. Cold drawn wire used for spiral reinforcement shall conform to ASTM A 82.

2.4 NOT USED ~~WELDED WIRE FABRIC~~

~~Welded wire fabric shall conform to ASTM A 185 or ASTM A 497.~~

2.5 WIRE TIES

Wire ties shall be 16 gauge or heavier black annealed steel wire.

2.6 SUPPORTS

Bar supports for formed surfaces shall be designed and fabricated in accordance with CRSI MSP-1 and shall be steel or precast concrete blocks. Precast concrete blocks shall have wire ties and shall be not less than 100 by 100 mm when supporting reinforcement on ground. Precast concrete block shall have compressive strength equal to that of the surrounding concrete. Where concrete formed surfaces will be exposed to weather or where surfaces are to be painted, steel supports within 13 mm of concrete surface shall be galvanized, plastic protected or of stainless steel. Concrete supports used in concrete exposed to view shall have the same color and texture as the finish surface. For slabs on grade, supports shall be precast concrete blocks, plastic coated steel fabricated with bearing plates, or specifically designed wire-fabric supports fabricated of plastic.

2.7 SYNTHETIC FIBER REINFORCEMENT

Synthetic fiber shall be polypropylene with a denier less than 100 and a nominal fiber length of 50 mm.

PART 3 EXECUTION

3.1 REINFORCEMENT

Reinforcement shall be fabricated to shapes and dimensions shown and shall conform to the requirements of ACI 318/318R. Reinforcement shall be cold bent unless otherwise authorized. Bending may be accomplished in the field or at the mill. Bars shall not be bent after embedment in concrete. Safety caps shall be placed on all exposed ends of vertical concrete reinforcement bars that pose a danger to life safety. Wire tie ends shall face away from the forms.

3.1.1 Placement

Reinforcement shall be free from loose rust and scale, dirt, oil, or other deleterious coating that could reduce bond with the concrete. Reinforcement shall be placed in accordance with ACI 318/318R at locations shown plus or minus one bar diameter. Reinforcement shall not be continuous through expansion joints and shall be as indicated through construction or contraction joints. Concrete coverage shall be as indicated or as required by ACI 318/318R. If bars are moved more than one bar diameter to avoid interference with other reinforcement, conduits or embedded items, the resulting arrangement of bars, including additional bars required to meet structural requirements, shall be approved before concrete is placed.

3.1.2 Splicing

Splices of reinforcement shall conform to ACI 318/318R and shall be made only as required or indicated. Splicing shall be by lapping or by mechanical or welded butt connection; except that lap splices shall not be used for bars larger than No. 11 unless otherwise indicated. Welding shall conform to AWS D1.4. Welded butt splices shall be full penetration butt welds. Lapped bars shall be placed in contact and securely tied or spaced transversely apart to permit the embedment of the entire surface of each bar in concrete. Lapped bars shall not be spaced farther apart than one-fifth the required length of lap or 150 mm. Mechanical butt splices shall be in accordance with the recommendation of the manufacturer of the mechanical splicing device. Butt splices shall develop 125 percent of the specified minimum yield tensile strength of the spliced bars or of the smaller bar in transition splices. Bars shall be flame dried before butt splicing. Adequate jigs and clamps or other devices shall be provided to support, align, and hold the longitudinal centerline of the bars to be butt spliced in a straight line.

3.3 DOWELS

Dowels shall be installed in slabs on grade at locations indicated and at right angles to joint being doweled. Dowels shall be accurately positioned and aligned parallel to the finished concrete surface before concrete placement. Dowels shall be rigidly supported during concrete placement. One end of dowels shall be coated with a bond breaker.

3.4 SYNTHETIC FIBER REINFORCED CONCRETE

Fiber reinforcement shall be added to the concrete mix in accordance with the applicable sections of ASTM C 1116 and the recommendations of the manufacturer and in an amount of 0.1 percent by volume.

END OF SECTION

SECTION 03300

CAST-IN-PLACE STRUCTURAL CONCRETE

PART 1 GENERAL

1.1 REFERENCES

The publications listed below form a part of this specification to the extent referenced. The publications are referred to in the text by basic designation only.

AMERICAN ASSOCIATION OF STATE HIGHWAY AND TRANSPORTATION OFFICIALS (AASHTO)

AASHTO M 182	(1991I) Burlap Cloth Made From Jute or Kenaf

ACI INTERNATIONAL (ACI)

ACI 117/A117R	(1990; Errata) Standard Tolerances for Concrete Construction and Materials
ACI 211.1	(1991) Standard Practice for Selecting Proportions for Normal, Heavyweight, and Mass Concrete
ACI 214.3R	(1988) Simplified Version of the Recommended Practice for Evaluation of Strength Test Results of Concrete
ACI 301	(1996) Specifications for Structural Concrete for Buildings
ACI 305R	(1991) Hot Weather Concreting
ACI 318/318R	(1999) Building Code Requirements for Reinforced Concrete and Commentaries

AMERICAN SOCIETY FOR TESTING AND MATERIALS (ASTM)

ASTM C 31	(1991) Making and Curing Concrete Test Specimens in the Field
ASTM C 33	(1993) Concrete Aggregates
ASTM C 39	(1994) Compressive Strength of Cylindrical Concrete Specimens
ASTM C 42	(1994) Obtaining and Testing Drilled Cores and Sawed Beams of Concrete
ASTM C 78	(1994) Flexural Strength of Concrete (Using Simple Beam With Third-Point Loading)
ASTM C 94	(1995) Ready-Mixed Concrete
ASTM C 136	(1995a) Sieve Analysis of Fine and Coarse Aggregates

ASTM C 143	(1990a) Slump of Hydraulic Cement Concrete
ASTM C 150	(1995) Portland Cement
ASTM C 171	(1995) Sheet Materials for Curing Concrete
ASTM C 172	(1990) Sampling Freshly Mixed Concrete
ASTM C 173	(1994a) Air Content of Freshly Mixed Concrete by the Volumetric Method
ASTM C 192	(1990a) Making and Curing Concrete Test Specimens in the Laboratory
ASTM C 231	(1991b) Air Content of Freshly Mixed Concrete by the Pressure Method
ASTM C 260	(1995) Air-Entraining Admixtures for Concrete
ASTM C 309	(1995) Liquid Membrane-Forming Compounds for Curing Concrete
ASTM C 494	(1992) Chemical Admixtures for Concrete
ASTM C 552	(1991) Cellular Glass Thermal Insulation
ASTM C 578	(1995) Rigid, Cellular Polystyrene Thermal Insulation
ASTM C 591	(1994) Unfaced Preformed Rigid Cellular Polyurethane Thermal Insulation
ASTM C 595	(1994a) Blended Hydraulic Cements
ASTM C 618	(1995) Coal Fly Ash and Raw or Calcined Natural Pozzolan for Use as a Mineral Admixture in Portland Cement Concrete
ASTM C 685	(1995) Concrete Made by Volumetric Batching and Continuous Mixing
ASTM C 881	(1990) Epoxy-Resin-Base Bonding Systems for Concrete
ASTM C 937	(1980, R 1991) Grout Fluidifier for Preplaced-Aggregate Concrete
ASTM C 940	(1989) Expansion and Bleeding of Freshly Mixed Grouts for Preplaced-Aggregate Concrete in the Laboratory
ASTM C 989	(1994a) Ground Granulated Blast-Furnace Slag for Use in Concrete and Mortars
ASTM C 1017	(1992) Chemical Admixtures for Use in Producing Flowing Concrete
ASTM C 1059	(1991) Latex Agents for Bonding Fresh to Hardened Concrete
ASTM C 1064	(1986, R 1993) Temperature of Freshly Mixed Portland Cement Concrete

ASTM C 1077	(1995b) Standard Practice for Laboratories Testing Concrete and Concrete Aggregates for Use in Construction and Criteria for Laboratory Evaluation
ASTM C 1107	(1991a) Packaged Dry, Hydraulic-Cement Grout (Nonshrink)
ASTM C 1116	(1991) Fiber-Reinforced Concrete and Shotcrete
ASTM C 1240	(1995) Silica Fume for Use in Hydraulic Cement Concrete and Mortar
ASTM D 75	(1987; R 1992) Sampling Aggregates
ASTM D 1751	(1983; R 1991) Preformed Expansion Joint Filler for Concrete Paving and Structural Construction (Nonextruding and Resilient Bituminous Types)
ASTM E 96	(1995) Water Vapor Transmission of Materials

CORPS OF ENGINEERS (COE)

COE CRD-C 94	(1995) Surface Retarders
COE CRD-C 104	(1980) Method of Calculation of the Fineness Modulus of Aggregate
COE CRD-C 400	(1963) Requirements for Water for Use in Mixing or Curing Concrete
COE CRD-C 521	(1981) Standard Test Method for Frequency and Amplitude of Vibrators for Concrete
COE CRD-C 540	(1971; R 1981) Standard Specification for Nonbituminous Inserts for Contraction Joints in Portland Cement Concrete Airfield Pavements, Sawable Type
COE CRD-C 572	(1974) Corps of Engineers Specifications for Polyvinylchloride Waterstop

NATIONAL INSTITUTE OF STANDARDS AND TECHNOLOGY (NIST)

NIST HB 44	(1995) NIST Handbook 44: Specifications, Tolerances, and Other Technical Requirements for Weighing and Measuring Devices

NATIONAL READY-MIXED CONCRETE ASSOCIATION (NRMCA)

NRMCA TMMB-01	(1992) Truck Mixer Agitator and Front Discharge Concrete Carrier Standards of the Truck Mixer Manufacturers Bureau
NRMCA CPMB 100	(1990) Concrete Plant Standards
NRMCA QC 3	(1984) Quality Control Manual: Section 3, Plant Certifications Checklist: Certification of Ready Mixed Concrete Production Facilities

1.2 NOT USED

1.3 NOT USED

1.4 SUBMITTALS

Government approval is required for submittals with a "GA" designation; submittals having an "FIO" designation are for information only. The following shall be submitted in accordance with SECTION: SUBMITTALS:

SD-08 Statements

Mixture Proportions; GA.

The results of trial mixture design studies along with a statement giving the maximum nominal coarse aggregate size and the proportions of ingredients that will be used in the manufacture of each strength or class of concrete, at least 14 days prior to commencing concrete placing operations. Aggregate weights shall be based on the saturated surface dry condition. The statement shall be accompanied by test results from an approved independent commercial testing laboratory, showing that mixture design studies have been made with materials proposed for the project and that the proportions selected will produce concrete of the qualities indicated. No substitutions shall be made in the materials used in the mixture design studies without additional tests to show that the quality of the concrete is satisfactory.

SD-09 Reports

Testing and Inspection for Contractor Quality Control; GA.

Certified copies of laboratory test reports, including mill tests and all other test data, for portland cement, blended cement, pozzolan, ground granulated blast furnace slag, silica fume, aggregate, admixtures, and curing compound proposed for use on this project.

SD-13 Certificates

Qualifications; FIO.

Written documentation for Contractor Quality Control personnel.

SD-14 Samples

Surface Retarder; FIO.

Surface retarder material with manufacturer's instructions for application in conjunction with air-water cutting.

1.5 QUALIFICATIONS

Contractor Quality Control personnel assigned to concrete construction shall be American Concrete Institute (ACI) Certified Workmen in one of the following grades or shall have written evidence of having completed similar qualification programs:

Concrete Field Testing Technician, Grade I
Concrete Laboratory Testing Technician, Grade I or II
Concrete Construction Inspector, Level II

The foreman or lead journeyman of the flatwork finishing crew shall have similar qualification for ACI Concrete Flatwork Technician/Finisher or equal, with written documentation.

1.6 FIELD TEST PANELS

Field test panels shall be constructed prior to beginning of work using the materials and procedures proposed for use on the job, to demonstrate the results to be attained. The quality and appearance of each panel shall be subject to the approval of the Contracting Officer, and, if not judged satisfactory, additional panels shall be constructed until approval is attained. Formed or finished surfaces in the completed structure shall match the quality and appearance of the approved field example.

1.6.1 Sample Wall Panels

One sample panel at least 1220 mm by 1525 mm and 150 mm thick shall be constructed to demonstrate Class A formed finish and a similar one for Class B formed finish. Panels shall be located as directed by Contracting Officer's Representative. Each panel shall include a full length and full width joint line and shall have at least two voids each at least 300 mm by 300 mm by 75 mm deep either impressed in the concrete as placed or chipped in the hardened concrete. After the concrete is 7 days old, the voids shall be patched to demonstrate the effectiveness and the appearance of the Contractor's repair procedures.

1.7 OMITTED

1.8 GENERAL REQUIREMENTS

1.8.1 Tolerances

Except as otherwise specified herein, tolerances for concrete batching, mixture properties, and construction as well as definition of terms and application practices shall be in accordance with ACI 117/A117R. Level and grade tolerance measurements of slabs shall be made as soon as possible after finishing; when forms or shoring are used, the measurements shall be made prior to removal.

1.8.1.1 Floors

For the purpose of this Section the following terminology correlation between ACI 117/A117R and this Section shall apply:

Floor Profile Quality Classification From ACI 117/A117R	This Section
Conventional Bullfloated	Same
Conventional Straightedged	Same
Flat	Float Finish or Trowel Finish
Very Flat	Same. Use only with F-system

Levelness tolerance shall not apply where design requires floors to be sloped to drains or sloped for other reasons.

1.8.2 Strength Requirements and w/c Ratio

1.8.2.1 Strength Requirements

Specified compressive strength (f'c) shall be as follows:

COMPRESSIVE STRENGTH	STRUCTURE OR PORTION OF STRUCTURE
27.5 MPa at 28 days	all concrete

Concrete made with high-early strength cement shall have a 7-day strength equal to the specified 28-day strength for concrete made with Type II portland cement. Compressive strength shall be determined in accordance with ASTM C 39. Flexural strength shall be determined in accordance with ASTM C 78.

a. Evaluation of Concrete Compressive Strength. Compressive strength specimens (152 by 305 mm (6- by 12-inch) cylinders) shall be fabricated by the Contractor and laboratory cured in accordance with ASTM C 31 and tested in accordance with ASTM C 39. The strength of the concrete will be considered satisfactory so long as the average of all sets of three consecutive test results equals or exceeds the specified compressive strength f'c and no individual test result falls below the specified strength f'c by more than 3.5 MPa (500 psi). A "test" is defined as the average of two companion cylinders, or if only one cylinder is tested, the results of the single cylinder test. Additional analysis or testing, including taking cores and/or load tests may be required at the Contractor's expense when the strength of the concrete in the structure is considered potentially deficient.

b. Investigation of Low-Strength Compressive Test Results. When any strength test of standard-cured test cylinders falls below the specified strength requirement by more than 3.5 MPa or if tests of field-cured cylinders indicate deficiencies in protection and curing, steps shall be taken to assure that the load-carrying capacity of the structure is not jeopardized. When the strength of concrete in place is considered potentially deficient, cores shall be obtained and tested in accordance with ASTM C 42. At least three representative cores shall be taken from each member or area of concrete
in place that is considered potentially deficient. The location of cores will be determined by the Contracting Officer to least impair the strength of the structure. Concrete in the area represented by the core testing will be considered adequate if the average strength of the cores is equal to at least 85 percent of the specified strength requirement and if no single core is less than 75 percent of the specified strength requirement. Non-destructive tests (tests other than test cylinders or cores) shall not be used as a basis for acceptance or rejection. The Contractor shall perform the coring and repair the holes. Cores will be tested by the Government.

c. Load Tests. If the core tests are inconclusive or impractical to obtain or if structural analysis does not confirm the safety of the structure, load tests may be directed by the Contracting Officer in accordance with the requirements of ACI 318/318R. Concrete work evaluated by structural analysis or by results of a load test as being understrength shall be corrected in a manner satisfactory to the Contracting Officer. All investigations, testing, load tests, and correction of deficiencies shall be performed by and at the expense of the Contractor and must be approved by the Contracting Officer, except that if all concrete is found to be in compliance with the drawings and specifications, the cost of investigations, testing, and load tests will be at the expense of the Government.

d. Evaluation of Concrete Flexural Strength. Flexural strength specimens (beams) shall be fabricated by the Contractor and laboratory cured in accordance with ASTM C 31 and tested in accordance with ASTM C 78. The strength of the concrete will be considered satisfactory so long as the average of all sets of three consecutive test results equals or exceeds the specified flexural strength and no individual test result falls below the specified flexural strength by more than 350 kPa. A "test" is defined as the average of two companion beams. Additional analysis or testing, including taking cores and/or load tests may be required at the Contractor's expense when the strength of the concrete in the slab is considered potentially deficient.

1.8.3 Air Entrainment

Except as otherwise specified for lightweight concrete, all normal weight concrete shall be air entrained to contain between 4 and 7 percent total air, except that when the nominal maximum size coarse aggregate is 19 mm (3/4 inch) or smaller it shall be between 4.5 and 7.5 percent. Concrete with specified strength over 35 MPa may have 1 percent less air than specified above. Specified air content shall be attained at point of placement into the forms. Air content for normal weight concrete shall be determined in accordance with ASTM C 231.

1.8.4 Slump

Slump of the concrete, as delivered to the point of placement into the forms, shall be within the following limits. Slump shall be determined in accordance with ASTM C 143.

	Slump	
Structural Element	Minimum	Maximum
Walls, columns and beams	50 mm (2 in.)	100 mm (4 in.)
Foundation walls, substructure walls, footings, slabs	25 mm (1 in.)	75 mm (3 in.)
Any structural concrete approved for placement by pumping:		
At pump	50 mm (2 in.)	150 mm (6 in.)
At discharge of line	25 mm (1 in.)	100 mm (4 in.)

1.8.5 Concrete Temperature

The temperature of the concrete as delivered shall not exceed 32 degrees C. When the ambient temperature during placing is 5 degrees C or less, or is expected to be at any time within 6 hours after placing, the temperature of the concrete as delivered shall be between 12 and 25 degrees C.

1.8.6 Size of Coarse Aggregate

The largest feasible nominal maximum size aggregate (NMSA) specified in paragraph AGGREGATES shall be used in each placement. However, nominal maximum size of aggregate shall not exceed any of the following: three-fourths of the minimum cover for reinforcing bars, three-fourths of the minimum clear spacing between reinforcing bars, one-fifth of the narrowest dimension between sides of forms, or one-third of the thickness of slabs or toppings.

1.8.7 Special Properties and Products

Concrete may contain admixtures other than air entraining agents, such as water reducers, superplasticizers, or set retarding agents to provide special properties to the concrete, if specified or approved. Any of these materials to be used on the project shall be used in the mix design studies.

1.9 MIXTURE PROPORTIONS

Concrete shall be composed of portland cement, other cementitious and pozzolanic materials as specified, aggregates, water and admixtures as specified.

1.9.1 Proportioning Studies for Normal Weight Concrete

Trial design batches, mixture proportioning studies, and testing requirements for various classes and types of concrete specified shall be the responsibility of the Contractor. Except as specified for flexural strength concrete, mixture proportions shall be based on compressive strength as determined by test specimens fabricated in accordance with ASTM C 192 and tested in accordance with ASTM C 39. Samples of all materials used in mixture proportioning studies shall be representative of those proposed for use in the project and shall be accompanied by the manufacturer's or producer's test reports indicating compliance with these specifications. Trial mixtures having proportions, consistencies, and air content suitable for the work shall be made based on methodology described in ACI 211.1, using at least three different water-cement ratios for each type of mixture, which will produce a range of strength encompassing those required for each class and type of concrete required on the project. The maximum water-cement ratios required in the paragraph Maximum Allowable w/c Ratio will be the equivalent water-cement ratio as determined by conversion from the weight ratio of water to cement plus pozzolan, silica fume, and ground granulated blast furnace slag (GGBF slag) by the weight equivalency method as described in ACI 211.1. In the case where silica fume or GGBF slag is used, the weight of the silica fume and GGBF slag shall be included in the equations in ACI 211.1 for the term P, which is used to denote the weight of pozzolan. If pozzolan is used in the concrete mixture, the minimum pozzolan content shall be 15 percent by weight of the total cementitious material, and the maximum shall be 35 percent. Laboratory trial mixtures shall be designed for maximum permitted slump and air content. Separate sets of trial mixture studies shall be made for each combination of cementitious materials and each combination of admixtures proposed for use. No combination of either shall be used until proven by such studies, except that, if approved in writing and otherwise permitted by these specifications, an accelerator or a retarder may be used without separate trial mixture study. Separate trial mixture studies shall also be made for concrete for any conveying or placing method proposed which requires special properties and for concrete to be placed in unusually difficult placing locations. The temperature of concrete in each trial batch shall be reported. For each water-cement ratio, at least three test cylinders for each test age shall be made and cured in accordance with ASTM C 192. They shall be tested at 7 and 28 days in accordance with ASTM C 39. From these test results, a curve shall be plotted showing the relationship between water-cement ratio and strength for each set of trial mix studies. In addition, a curve shall be plotted showing the relationship between 7-day and 28-day strengths. Each mixture shall be designed to promote easy and suitable concrete placement, consolidation and finishing, and to prevent segregation and excessive bleeding.

1.9.2 Omitted

1.9.3 Omitted

1.9.4 Average Compressive Strength Required for Mixtures

The mixture proportions selected during mixture design studies shall produce a required average compressive strength (f'cr) exceeding the specified compressive strength (f'c) by the amount indicated below. This required average compressive strength, f'cr, will not be a required acceptance criteria during concrete production. However, whenever the daily average compressive strength at 28 days drops below f'cr during concrete production, or daily average 7-day strength drops below a strength correlated with the 28-day f'cr, the mixture shall be adjusted, as approved, to bring the daily average back up to f'cr. During production, the required f'cr shall be adjusted, as appropriate, based on the standard deviation being attained on the job.

1.9.4.1 Computations from Test Records

Where a concrete production facility has test records, a standard deviation shall be established in accordance with the applicable provisions of ACI 214.3R. Test records from which a standard deviation is calculated shall represent materials, quality control procedures, and conditions similar to those expected; shall represent concrete produced to meet a specified strength or strengths (f'c) within 7 MPa of that specified for proposed work; and shall consist of at least 30 consecutive tests. A strength test shall be the average of the strengths of two cylinders made from the same sample of concrete and tested at 28 days. Required average compressive strength f'cr used as the basis for selection of concrete proportions shall be the larger of the equations that follow using the standard deviation as determined above:

f'cr = f'c + 1.34S

f'cr = f'c + 2.33S - 500

Where S = standard deviation

Where a concrete production facility does not have test records meeting the requirements above but does have a record based on 15 to 29 consecutive tests, a standard deviation shall be established as the product of the calculated standard deviation and a modification factor from the following table:

NUMBER OF TESTS	MODIFICATION FACTOR FOR STANDARD DEVIATION
15	1.16
20	1.08
25	1.03
30 or more	1.00

1.9.4.2 Computations without Previous Test Records

When a concrete production facility does not have sufficient field strength test records for calculation of the standard deviation, the required average strength f'cr shall be determined as follows:

a. If the specified compressive strength f'c is less than 20 MPa, f'cr = f'c + 6.9 MPa (f'cr = f'c + 1,000 psi)

b. If the specified compressive strength f'c is 20 to 35 MPa, f'cr = f'c + 8.3 MPa (f'cr = f'c + 1,200 psi)

c. If the specified compressive strength f'c is over 35 MPa, f'cr = f'c + 9.7 MPa (f'cr = f'c + 1,400 psi)

1.10 STORAGE OF MATERIALS

Cement and other cementitious materials shall be stored in weathertight buildings, bins, or silos which will exclude moisture and contaminants and keep each material completely separated. Aggregate stockpiles shall be arranged and used in a manner to avoid excessive segregation and to prevent contamination with other materials or with other sizes of aggregates. Aggregate shall not be stored directly on ground unless a sacrificial layer is left undisturbed. Reinforcing bars and accessories shall be stored above the ground on platforms, skids or other supports. Other materials shall be stored in such a manner as to avoid contamination and deterioration. Admixtures which have been in storage at the project site for longer than 6 months or which have been subjected to freezing shall not be used unless retested and proven to meet the specified requirements. Materials shall be capable of being accurately identified after bundles or containers are opened.

1.11 GOVERNMENT ASSURANCE INSPECTION AND TESTING

Day-to day inspection and testing shall be the responsibility of the Contractor Quality Control (CQC) staff. However, representatives of the Contracting Officer can and will inspect construction as considered appropriate and will monitor operations of the Contractor's CQC staff. Government inspection or testing will not relieve the Contractor of any of his CQC responsibilities.

1.11.1 Materials

The Government will sample and test aggregates, cementitious materials, other materials, and concrete to determine compliance with the specifications as considered appropriate. The Contractor shall provide facilities and labor as may be necessary for procurement of representative test samples. Samples of aggregates will be obtained at the point of batching in accordance with ASTM D 75. Other materials will be sampled from storage at the jobsite or from other locations as considered appropriate. Samples may be placed in storage for later testing when appropriate.

1.11.2 Fresh Concrete

Fresh concrete will be sampled as delivered in accordance with ASTM C 172 and tested in accordance with these specifications, as considered necessary.

1.11.3 Hardened Concrete

Tests on hardened concrete will be performed by the Government when such tests are considered necessary.

1.11.4 Inspection

Concrete operations may be tested and inspected by the Government as the project progresses. Failure to detect defective work or material will not prevent rejection later when a defect is discovered nor will it obligate the Government for final acceptance.

PART 2 PRODUCTS

2.1 CEMENTITIOUS MATERIALS

Cementitious materials shall be portland cement, portland-pozzolan cement, or portland cement in combination with pozzolan and shall conform to appropriate specifications listed below. Use of cementitious materials in concrete which will have surfaces exposed in the completed structure shall be restricted so there is no change in color, source, or type of cementitious material.

2.1.1 Portland Cement

ASTM C 150, Type I with a maximum 15 percent amount of tricalcium aluminate, or Type II. White portland cement shall meet the above requirements except that it may be Type I, Type II or Type III. Use Type V (sulfate resisting) cement or Type II cement with a maximum of 5 percent CBA content for all concrete exposed to the subgrade days or perched ground water tables.

2.1.2 High-Early-Strength Portland Cement

ASTM C 150, Type III with tricalcium aluminate limited to 8 percent. Type III cement shall be used only in isolated instances and only when approved in writing.

2.1.3 Blended Cements

ASTM C 595, Type IP.

2.1.4 Pozzolan (Fly Ash)

ASTM C 618, Class C with the optional requirements for multiple factor, drying shrinkage, and uniformity from Table 2A of ASTM C 618. If pozzolan is used, it shall never be less than 15 percent nor more than 35 percent by weight of the total cementitious material.

2.1.5 Ground Granulated Blast-Furnace (GGBF) Slag

ASTM C 989, Grade 120.

2.1.6 Silica Fume

Silica fume shall conform to ASTM C 1240. Available alkalies shall conform to the optimal limit given in Table 2 of ASTM C 1240. Silica fume may be furnished as a dry, densified material or as a slurry. In accordance with paragraph Technical Service for Specialized Concrete, the Contractor shall provide at no cost to the Government the services of a manufacturer's technical representative experienced in mixing, proportioning, placement procedures, and curing of concrete containing silica fume.

2.2 AGGREGATES

Aggregates shall conform to the following.

2.2.1 Fine Aggregate

Fine aggregate shall conform to the quality and gradation requirements of ASTM C 33.

2.2.2 Coarse Aggregate

Coarse aggregate shall conform to ASTM C 33, Class 5S, size designation 19 mm.

2.3 CHEMICAL ADMIXTURES

Chemical admixtures, when required or permitted, shall conform to the appropriate specification listed. Admixtures shall be furnished in liquid form and of suitable concentration for easy, accurate control of dispensing.

2.3.1 Air-Entraining Admixture

ASTM C 260 and shall consistently entrain the air content in the specified ranges under field conditions.

2.3.2 Accelerating Admixture

ASTM C 494, Type C or E, except that calcium chloride or admixtures containing calcium chloride shall not be used.

2.3.3 Water-Reducing or Retarding Admixture

ASTM C 494, Type A, B, or D, except that the 6-month and 1 year compressive and flexural strength tests are waived.

2.3.4 High-Range Water Reducer

ASTM C 494, Type F or G, except that the 6-month and 1 year strength requirements are waived. The admixture shall be used only when approved in writing, such approval being contingent upon particular mixture control as described in the Contractor's Quality Control Plan and upon performance of separate mixture design studies.

2.3.5 Surface Retarder

COE CRD-C 94.

2.3.6 Expanding Admixture

Aluminum powder type expanding admixture conforming to ASTM C 937.

2.3.7 Other Chemical Admixtures

Chemical admixtures for use in producing flowing concrete shall comply with ASTM C 1017, Type I or II. These admixtures shall be used only when approved in writing, such approval being contingent upon particular mixture control as described in the Contractor's Quality Control Plan and upon performance of separate mixture design studies.

2.4 CURING MATERIALS

2.4.1 Impervious-Sheet

Impervious-sheet materials shall conform to ASTM C 171, type optional, except, that polyethylene sheet shall not be used.

2.4.2 Membrane-Forming Compound

Membrane-Forming curing compound shall conform to ASTM C 309, Type 1-D or 2, except that only a styrene acrylate or chlorinated rubber compound meeting Class B requirements shall be used for surfaces that are to be painted or are to receive bituminous roofing, or waterproofing, or floors that are to receive adhesive applications of resilient flooring. The curing compound selected shall be compatible with any subsequent paint, roofing, waterproofing, or flooring specified. Nonpigmented compound shall contain a fugitive dye, and shall have the reflective requirements in ASTM C 309 waived.

2.4.3 Burlap and Cotton Mat

Burlap and cotton mat used for curing shall conform to AASHTO M 182.

2.5 WATER

Water for mixing and curing shall be fresh, clean, potable, and free of injurious amounts of oil, acid, salt, or alkali, except that non-potable water may be used if it meets the requirements of COE CRD-C 400.

2.6 NONSHRINK GROUT

Nonshrink grout shall conform to ASTM C 1107, Grade A, and shall be a commercial formulation suitable for the proposed application.

2.7 NONSLIP SURFACING MATERIAL

Nonslip surfacing material shall consist of 55 percent, minimum, aluminum oxide or silicon-dioxide abrasive ceramically bonded together to form a homogeneous material sufficiently porous to provide a good bond with portland cement paste; or factory-graded emery aggregate consisting of not less than 45 percent aluminum oxide and 25 percent ferric oxide. The aggregate shall be well graded from particles retained on the 0.600 mm (No. 30) sieve to particles passing the 2.36 mm (No. 8) sieve.

2.8 LATEX BONDING AGENT

Latex agents for bonding fresh to hardened concrete shall conform to ASTM C 1059.

2.9 EPOXY RESIN

Epoxy resins for use in repairs shall conform to ASTM C 881, Type V, Grade 2. Class as appropriate to the existing ambient and surface temperatures.

2.10 EMBEDDED ITEMS

Embedded items shall be of the size and type indicated or as needed for the application. Dovetail slots shall be galvanized steel. Inserts for shelf angles and bolt hangers shall be of malleable iron or cast or wrought steel.

2.11 FLOOR HARDENER

Floor hardener shall be a colorless aqueous solution containing zinc silicofluoride, magnesium silicofluoride, or sodium silicofluoride. These silicofluorides can be used individually or in combination. Proprietary hardeners may be used if approved in writing by the Contracting Officer.

2.12 PERIMETER INSULATION

Perimeter insulation shall be polystyrene conforming to ASTM C 578, Type II; polyurethane conforming to ASTM C 591, Type II; or cellular glass conforming to ASTM C 552, Type I or IV.

2.13 VAPOR BARRIER

Vapor barrier shall be polyethylene sheeting with a minimum thickness of 0.15 mm (6 mils) or other equivalent material having a vapor permeance rating not exceeding 30 nanograms per Pascal per second per square meter (0.5 perms) as determined in accordance with ASTM E 96.

2.14 JOINT MATERIALS

2.14.1 Joint Fillers, Sealers, and Waterstops

Expansion joint fillers shall be preformed materials conforming to ASTM D 1751. Materials for waterstops shall be in accordance with SECTION: 03150 EXPANSION JOINTS, CONTRACTION JOINTS, AND WATERSTOPS. Materials for and sealing of joints shall conform to the requirements of SECTION: JOINT SEALING.

2.14.2 Contraction Joints in Slabs

Sawable type contraction joint inserts shall conform to COE CRD-C 540. Nonsawable joint inserts shall have sufficient stiffness to permit placement in plastic concrete without undue deviation from a straight line and shall conform to the physical requirements of COE CRD-C 540, with the exception of Section 3.4 "Resistance to Sawing." Plastic inserts shall be polyvinyl chloride conforming to the materials requirements of COE CRD-C 572.

2.15 SYNTHETIC FIBERS FOR REINFORCING

Synthetic fibers shall conform to ASTM C 1116, Type III, Synthetic Fiber, and as follows. Fibers shall be 100 percent virgin polypropylene fibrillated fibers containing no reprocessed olefin materials. Fibers shall have a specific gravity of 0.9, a minimum tensile strength of 480 MPa graded per manufacturer, and specifically manufactured to an optimum gradation for use as concrete secondary reinforcement.

PART 3 EXECUTION

3.1 PREPARATION FOR PLACING

Before commencing concrete placement, the following shall be performed. Surfaces to receive concrete shall be clean and free from frost, ice, mud, and water. Forms shall be in place, cleaned, coated, and adequately supported, in accordance with SECTION: 03100 STRUCTURAL CONCRETE FORMWORK. Reinforcing steel shall be in place, cleaned, tied, and adequately supported, in accordance with SECTION: 03200 CONCRETE REINFORCEMENT. Transporting and conveying equipment shall be in-place, ready for use, clean, and free of hardened concrete and foreign material. Equipment for consolidating concrete shall be at the placing site and in proper working order. Equipment and material for curing and for protecting concrete from weather or mechanical damage shall be at the placing site, in proper working condition and in sufficient amount for the entire placement. When hot, windy conditions during concreting appear probable, equipment and material shall be at the placing site to provide windbreaks, shading, fogging, or other action to prevent plastic shrinkage cracking or other damaging drying of the concrete.

3.1.1 Foundations

3.1.1.1 Concrete on Earth Foundations

Earth (subgrade, base, or subbase courses) surfaces upon which concrete is to be placed shall be clean, damp, and free from debris, frost, ice, and standing or running water. Prior to placement of concrete, the foundation shall be well drained and shall be satisfactorily graded and uniformly compacted.

3.1.1.2 Preparation of Rock (Not Applicable)

3.1.1.3 Excavated Surfaces in Lieu of Forms

Concrete for footings may be placed directly against the soil provided the earth has been carefully trimmed, is uniform and stable, and meets the compaction requirements of SECTION: 02315, EXCAVATION,

FILLING, AND BACKFILLING FOR BUILDINGS and requirements of SECTION: 02383, DRILLED FOUNDATION CAISSONS (PIERS). The concrete shall be placed without becoming contaminated by loose material, and the outline of the concrete shall be within the specified tolerances.

3.1.2 Previously Placed Concrete

Concrete surfaces to which additional concrete is to be bonded shall be prepared for receiving the next horizontal lift by cleaning the construction joint surface with either air-water cutting, sandblasting, high-pressure water jet, or other approved method. Concrete at the side of vertical construction joints shall be prepared as approved by the Contracting Officer. Air-water cutting shall not be used on formed surfaces or surfaces congested with reinforcing steel. Regardless of the method used, the resulting surfaces shall be free from all laitance and inferior concrete so that clean surfaces of well bonded coarse aggregate are exposed and make up at least 10-percent of the surface area, distributed uniformly throughout the surface. The edges of the coarse aggregate shall not be undercut. The surface of horizontal construction joints shall be kept continuously wet for the first 12 hours during the 24-hour period prior to placing fresh concrete. The surface shall be washed completely clean as the last operation prior to placing the next lift. For heavy duty floors and two-course floors a thin coat of neat cement grout of about the consistency of thick cream shall be thoroughly scrubbed into the existing surface immediately ahead of the topping placing. The grout shall be a 1:1 mixture of portland cement and sand passing the 2.36 mm (No. 8) sieve. The topping concrete shall be deposited before the grout coat has had time to stiffen.

3.1.2.1 Air-Water Cutting

Air-water cutting of a fresh concrete surface shall be performed at the proper time and only on horizontal construction joints. The air pressure used in the jet shall be 700 kPa plus or minus, 70 kPa, and the water pressure shall be just sufficient to bring the water into effective influence of the air pressure. When approved by the Contracting Officer, a surface retarder complying with the requirements of COE CRD-C 94 may be applied to the surface of the lift in order to prolong the period of time during which air-water cutting is effective. After cutting, the surface shall be washed and rinsed as long as there is any trace of cloudiness of the wash water. Where necessary to remove accumulated laitance, coatings, stains, debris, and other foreign material, high-pressure waterjet or sandblasting shall be used as the last operation before placing the next lift.

3.1.2.2 High-Pressure Water Jet

A stream of water under a pressure of not less than 20 MPa shall be used for cutting and cleaning. Its use shall be delayed until the concrete is sufficiently hard so that only the surface skin or mortar is removed and there is no undercutting of coarse-aggregate particles. If the waterjet is incapable of a satisfactory cleaning, the surface shall be cleaned by sandblasting.

3.1.2.3 Wet Sandblasting

Wet sandblasting shall be used after the concrete has reached sufficient strength to prevent undercutting of the coarse aggregate particles. After wet sandblasting, the surface of the concrete shall then be washed thoroughly to remove all loose materials.

3.1.2.4 Waste Disposal

The method used in disposing of waste water employed in cutting, washing, and rinsing of concrete surfaces shall be such that the waste water does not stain, discolor, or affect exposed surfaces of the structures, or damage the environment of the project area. The method of disposal shall be subject to approval.

3.1.2.5 Preparation of Previously Placed Concrete

Concrete surfaces to which other concrete is to be bonded shall be abraded in an approved manner that will expose sound aggregate uniformly without damaging the concrete. Laitance and loose particles shall be removed. Surfaces shall be thoroughly washed and shall be moist but without free water when concrete is placed.

3.1.3 Vapor Barrier

Vapor barrier shall be provided beneath the interior on-grade concrete floor slabs. The greatest widths and lengths practicable shall be used to eliminate joints wherever possible. Joints shall be lapped a minimum of 300 mm. Torn, punctured, or damaged vapor barrier material shall be removed and new vapor barrier shall be provided prior to placing concrete. For minor repairs, patches may be made using laps of at least 300 mm. Lapped joints shall be sealed and edges patched with pressure-sensitive adhesive or tape not less than 50 mm wide and compatible with the membrane. Vapor barrier shall be placed directly on underlying subgrade, base course, or capillary water barrier, unless it consists of crushed material or large granular material which could puncture the vapor barrier. In this case, the surface shall be choked with a light layer of sand, as approved, before placing the vapor barrier. Concrete placement shall be controlled so as to prevent damage to the vapor barrier.

3.1.4 Omitted

3.1.5 Embedded Items

Before placement of concrete, care shall be taken to determine that all embedded items are firmly and securely fastened in place as indicated on the drawings, or required. Conduit and other embedded items shall be clean and free of oil and other foreign matter such as loose coatings or rust, paint, and scale. The embedding of wood in concrete will be permitted only when specifically authorized or directed. Voids in sleeves, inserts, and anchor slots shall be filled temporarily with readily removable materials to prevent the entry of concrete into voids. Welding shall not be performed on embedded metals within 600 mm of the surface of the concrete. Tack welding shall not be performed on or to embedded items.

3.2 CONCRETE PRODUCTION

3.2.1 Batching, Mixing, and Transporting Concrete

Concrete shall either be batched and mixed onsite or shall be furnished from a ready-mixed concrete plant. Ready-mixed concrete shall be batched, mixed, and transported in accordance with ASTM C 94, except as otherwise specified. Truck mixers, agitators, and nonagitating transporting units shall comply with NRMCA TMMB-01. Ready-mix plant equipment and facilities shall be certified in accordance with NRMCA QC 3. Approved batch tickets shall be furnished for each load of ready-mixed concrete. Site-mixed concrete shall conform to the following subparagraphs.

3.2.1.1 General

The batching plant shall be located off site close to the project. The batching plant shall conform to the requirements of NRMCA CPMB 100 and as specified; however, rating plates attached to batch plant equipment are not required.

3.2.1.2 Batching Equipment

The batching controls shall be semiautomatic or automatic, as defined in NRMCA CPMB 100. A semiautomatic batching system shall be provided with interlocks such that the discharge device cannot be actuated until the indicated material is within the applicable tolerance. The batching system shall be equipped with accurate recorder or recorders that meet the requirements of NRMCA CPMB 100. The weight of water and admixtures shall be recorded if batched by weight. Separate bins or compartments shall be provided for each size group of aggregate and type of cementitious material, to prevent intermingling at any time. Aggregates shall be weighed either in separate weigh batchers with individual scales or, provided the smallest size is batched first, cumulatively in one weigh batcher on one scale. Aggregate shall not be weighed in the same batcher with cementitious material. If both portland cement and other cementitious material are used, they may be batched cumulatively, provided that the portland cement is batched first, except that silica fume shall always be batched separately. Water may be measured by weight or volume. Water shall not be weighed or measured cumulatively with another ingredient. Filling and discharging valves for the water metering or batching system shall be so interlocked that the discharge valve cannot be opened before the filling valve is fully closed. Piping for water and for admixtures shall be free from leaks and shall be properly valved to prevent backflow or siphoning. Admixtures shall be furnished as a liquid of suitable concentration for easy control of dispensing. An adjustable, accurate, mechanical device for measuring and dispensing each admixture shall be provided. Each admixture dispenser shall be interlocked with the batching and discharging operation of the water so that each admixture is separately batched and individually discharged automatically in a manner to obtain uniform distribution throughout the water as it is added to the batch in the specified mixing period. When use of truck mixers makes this requirement impractical, the admixture dispensers shall be interlocked with the sand batchers. Different admixtures shall not be combined prior to introduction in water and shall not be allowed to intermingle until in contact with the cement. Admixture dispensers shall have suitable devices to detect and indicate flow during dispensing or have a means for visual observation. The plant shall be arranged so as to facilitate the inspection of all operations at all times. Suitable facilities shall be provided for obtaining representative samples of aggregates from each bin or compartment, and for sampling and calibrating the dispensing of cementitious material, water, and admixtures. Filling ports for cementitious materials bins or silos shall be clearly marked with a permanent sign stating the contents.

3.2.1.3 Scales

The weighing equipment shall conform to the applicable requirements of CPMB Concrete Plant Standard, and of NIST HB 44, except that the accuracy shall be plus or minus 0.2 percent of scale capacity. The Contractor shall provide standard test weights and any other auxiliary equipment required for checking the operating performance of each scale or other measuring devices. The tests shall be made at the specified frequency in the presence of a Government inspector. The weighing equipment shall be arranged so that the plant operator can conveniently observe all dials or indicators.

3.2.1.4 Batching Tolerances

(A) Tolerances with Weighing Equipment

MATERIAL	PERCENT OF REQUIRED WEIGHT
Cementitious materials	0 to plus 2
Aggregate	plus or minus 2
Water	plus or minus 1
Chemical admixture	0 to plus 6

(B) Tolerances with Volumetric Equipment

For volumetric batching equipment used for water and admixtures, the following tolerances shall apply to the required volume of material being batched:

MATERIAL	PERCENT OF REQUIRED MATERIAL
Water:	plus or minus 1 percent
Chemical admixtures:	0 to plus 6 percent

3.2.1.5 Moisture Control

The plant shall be capable of ready adjustment to compensate for the varying moisture content of the aggregates and to change the weights of the materials being batched.

3.2.1.6 Concrete Mixers

Mixers shall be stationary mixers or truck mixers. Mixers shall be capable of combining the materials into a uniform mixture and of discharging this mixture without segregation. The mixers shall not be charged in excess of the capacity recommended by the manufacturer. The mixers shall be operated at the drum or mixing blade speed designated by the manufacturer. The mixers shall be maintained in satisfactory operating condition, and the mixer drums shall be kept free of hardened concrete. Should any mixer at any time produce unsatisfactory results, its use shall be promptly discontinued until it is repaired.

3.2.1.7 Stationary Mixers

Concrete plant mixers shall be drum-type mixers of tilting, nontilting, horizontal-shaft, or vertical-shaft type, or shall be pug mill type and shall be provided with an acceptable device to lock the discharge mechanism until the required mixing time has elapsed. The mixing time and uniformity shall conform to all the requirements in ASTM C 94 applicable to central-mixed concrete.

3.2.1.8 Truck Mixers

Truck mixers, the mixing of concrete therein, and concrete uniformity shall conform to the requirements of ASTM C 94. A truck mixer may be used either for complete mixing (transit-mixed) or to finish the partial mixing done in a stationary mixer (shrink-mixed). Each truck shall be equipped with two counters from which it is possible to determine the number of revolutions at mixing speed and the number of revolutions at agitating speed. Water shall not be added at the placing site unless specifically approved; and in no case shall it exceed the specified w/c. Any such water shall be injected at the base of the mixer, not at the discharge end.

3.3 DELETED

3.4 OMITTED

3.5 FIBER REINFORCED CONCRETE

Fiber reinforced concrete shall conform to ASTM C 1116 and as follows, using the fibers specified in PART 2. A minimum of 0.9 kg of fibers per cubic m (1.5 pounds of fibers per cubic yard) of concrete shall be used. Fibers shall be added at the batch plant. Toughness indices shall meet requirements for

performance level I of ASTM C 1116. The services of a qualified technical representative shall be provided to instruct the concrete supplier in proper batching and mixing of materials to be provided.

3.6 TRANSPORTING CONCRETE TO PROJECT SITE

Concrete shall be transported to the placing site in truck mixers or by approved pumping equipment. Nonagitating equipment, other than pumps, shall not be used for transporting lightweight aggregate concrete.

3.7 CONVEYING CONCRETE ON SITE

Concrete shall be conveyed from mixer or transporting unit to forms as rapidly as possible and within the time interval specified by methods which will prevent segregation or loss of ingredients using following equipment. Conveying equipment shall be cleaned before each placement.

3.7.1 Buckets

The interior hopper slope shall be not less than 58 degrees from the horizontal, the minimum dimension of the clear gate opening shall be at least five times the nominal maximum-size aggregate, and the area of the gate opening shall not be less than 0.2 square meters (2 square feet). The maximum dimension of the gate opening shall not be greater than twice the minimum dimension. The bucket gates shall be essentially grout tight when closed and may be manually, pneumatically, or hydraulically operated except that buckets larger than 1.5 cubic meters shall not be manually operated. The design of the bucket shall provide means for positive regulation of the amount and rate of deposit of concrete in each dumping position.

3.7.2 Transfer Hoppers

Concrete may be charged into nonagitating hoppers for transfer to other conveying devices. Transfer hoppers shall be capable of receiving concrete directly from delivery vehicles and shall have conical-shaped discharge features. The transfer hopper shall be equipped with a hydraulically operated gate and with a means of external vibration to effect complete discharge. Concrete shall not be held in nonagitating transfer hoppers more than 30 minutes.

3.7.3 Trucks

Truck mixers operating at agitating speed or truck agitators used for transporting plant-mixed concrete shall conform to the requirements of ASTM C 94. Nonagitating equipment shall be used only for transporting plant-mixed concrete over a smooth road and when the hauling time is less than 15 minutes. Bodies of nonagitating equipment shall be smooth, watertight, metal containers specifically designed to transport concrete, shaped with rounded corners to minimize segregation, and equipped with gates that will permit positive control of the discharge of the concrete.

3.7.4 Chutes

When concrete can be placed directly from a truck mixer, agitator, or nonagitating equipment, the chutes normally attached to this equipment by the manufacturer may be used. A discharge deflector shall be used when required by the Contracting Officer. Separate chutes and other similar equipment will not be permitted for conveying concrete.

3.7.5 Belt Conveyors

Belt conveyors shall be designed and operated to assure a uniform flow of concrete from mixer to final place of deposit without segregation of ingredients or loss of mortar and shall be provided with positive means, such as discharge baffle or hopper, for preventing segregation of the concrete at the transfer points and the point of placing. Belt conveyors shall be constructed such that the idler spacing shall not exceed 900 mm. The belt speed shall be a minimum of 90 meters per minute and a maximum of 225 meters per minute. If concrete is to be placed through installed horizontal or sloping reinforcing bars, the conveyor shall discharge concrete into a pipe or elephant truck that is long enough to extend through the reinforcing bars.

3.7.6 Concrete Pumps

Concrete may be conveyed by positive displacement pump when approved. The pumping equipment shall be piston or squeeze pressure type; pneumatic placing equipment shall not be used. The pipeline shall be rigid steel pipe or heavy-duty flexible hose. The inside diameter of the pipe shall be at least three times the nominal maximum-size coarse aggregate in the concrete mixture to be pumped but not less than 100 mm. Aluminum pipe shall not be used.

3.8 PLACING CONCRETE

Mixed concrete shall be discharged within 1-1/2 hours or before the mixer drum has revolved 300 revolutions, whichever comes first after the introduction of the mixing water to the cement and aggregates. When the concrete temperature exceeds 30 degrees C, the time shall be reduced to 45 minutes. Concrete shall be placed within 15 minutes after it has been discharged from the transporting unit. Concrete shall be handled from mixer or transporting unit to forms in a continuous manner until the approved unit of operation is completed. Adequate scaffolding, ramps and walkways shall be provided so that personnel and equipment are not supported by in-place reinforcement. Placing will not be permitted when the sun, heat, wind, or limitations of facilities furnished by the Contractor prevent proper consolidation, finishing and curing. Sufficient placing capacity shall be provided so that concrete can be kept free of cold joints.

3.8.1 Depositing Concrete

Concrete shall be deposited as close as possible to its final position in the forms, and there shall be no vertical drop greater than 1.5 m except where suitable equipment is provided to prevent segregation and where specifically authorized. Depositing of the concrete shall be so regulated that it will be effectively consolidated in horizontal layers not more than 300 mm thick, except that all slabs shall be placed in a single layer. Concrete to receive other construction shall be screeded to the proper level. Concrete shall be deposited continuously in one layer or in layers so that fresh concrete is deposited on in-place concrete that is still plastic. Fresh concrete shall not be deposited on concrete that has hardened sufficiently to cause formation of seams or planes of weakness within the section. Concrete that has surface dried, partially hardened, or contains foreign material shall not be used. When temporary spreaders are used in the forms, the spreaders shall be removed as their service becomes unnecessary. Concrete shall not be placed in slabs over columns and walls until concrete in columns and walls has been in-place at least two hours or until the concrete begins to lose its plasticity. Concrete for beams, girders, brackets, column capitals, haunches, and drop panels shall be placed at the same time as concrete for adjoining slabs.

3.8.2 Consolidation

Immediately after placing, each layer of concrete shall be consolidated by internal vibrators, except for slabs 100 mm thick or less. The vibrators shall at all times be adequate in effectiveness and number to properly consolidate the concrete; a spare vibrator shall be kept at the jobsite during all concrete placing operations. The vibrators shall have a frequency of not less than 10,000 vibrations per minute, an amplitude of at least

0.6 mm, and the head diameter shall be appropriate for the structural member and the concrete mixture being placed. Vibrators shall be inserted vertically at uniform spacing over the area of placement. The distance between insertions shall be approximately 1-1/2 times the radius of action of the vibrator so that the area being vibrated will overlap the adjacent just-vibrated area by a reasonable amount. The vibrator shall penetrate rapidly to the bottom of the layer and at least 150 mm into the preceding layer if there is such. Vibrator shall be held stationary until the concrete is consolidated and then vertically withdrawn slowly while operating. Form vibrators shall not be used unless specifically approved and unless forms are constructed to withstand their use. Vibrators shall not be used to move concrete within the forms. Slabs 100 mm and less in thickness shall be consolidated by properly designed vibrating screeds or other approved technique. Excessive vibration of lightweight concrete resulting in segration or flotation of coarse aggregate shall be prevented. Frequency and amplitude of vibrators shall be determined in accordance with COE CRD-C 521. Grate tampers ("jitterbugs") shall not be used.

3.8.3 Cold Weather Requirements

Special protection measures, approved by the Contracting Officer, shall be used if freezing temperatures are anticipated before the expiration of the specified curing period. The ambient temperature of the air where concrete is to be placed and the temperature of surfaces to receive concrete shall be not less than 5 degrees C. The temperature of the concrete when placed shall be not less than 10 degrees C nor more than 25 degrees C. Heating of the mixing water or aggregates will be required to regulate the concrete placing temperature. Materials entering the mixer shall be free from ice, snow, or frozen lumps. Salt, chemicals or other materials shall not be incorporated in the concrete to prevent freezing. Upon written approval, an accelerating admixture conforming to ASTM C 494, Type C or E may be used, provided it contains no calcium chloride. Calcium chloride shall not be used.

3.8.4 Hot Weather Requirements

When the ambient temperature during concrete placing is expected to exceed 30 degrees C, the concrete shall be placed and finished with procedures previously submitted and as specified herein. The concrete temperature at time of delivery to the forms shall not exceed the temperature shown in the table below when measured in accordance with ASTM C 1064. Cooling of the mixing water or aggregates or placing concrete in the cooler part of the day may be required to obtain an adequate placing temperature. A retarder may be used, as approved, to facilitate placing and finishing. Steel forms and reinforcements shall be cooled as approved prior to concrete placement when steel temperatures are greater than 49 degrees C. Conveying and placing equipment shall be cooled if necessary to maintain proper concrete-placing temperature.

Maximum Allowable Concrete Placing Temperature

Relative Humidity, Percent, During Time of Concrete Placement	Maximum Allowable Concrete Temperature Degrees
Greater than 60	33 C (90 F)
40-60	30 C (85 F)
Less than 40	27 C (80 F)

3.8.5 Prevention of Plastic Shrinkage Cracking

During hot weather with low humidity, and particularly with appreciable wind, as well as interior placements when space heaters produce low humidity, the Contractor shall be alert to the tendency for plastic shrinkage cracks to develop and shall institute measures to prevent this. Particular care shall be taken if plastic

shrinkage cracking is potentially imminent and especially if it has developed during a previous placement. Periods of high potential for plastic shrinkage cracking can be anticipated by use of Fig. 2.1.5 of ACI 305R. In addition the concrete placement shall be further protected by erecting shades and windbreaks and by applying fog sprays of water, sprinkling, ponding or wet covering. Plastic shrinkage cracks that occur shall be filled by injection of epoxy resin as directed, after the concrete hardens. Plastic shrinkage cracks shall never be troweled over or filled with slurry.

3.8.6 Omitted

3.8.7 Placing Concrete in Congested Areas

Special care shall be used to ensure complete filling of the forms, elimination of all voids, and complete consolidation of the concrete when placing concrete in areas congested with reinforcing bars, embedded items, waterstops and other tight spacing. An appropriate concrete mixture shall be used, and the nominal maximum size of aggregate (NMSA) shall meet the specified criteria when evaluated for the congested area. Vibrators with heads of a size appropriate for the clearances available shall be used, and the consolidation operation shall be closely supervised to ensure complete and thorough consolidation at all points. Where necessary, splices of reinforcing bars shall be alternated to reduce congestion. Where two mats of closely spaced reinforcing are required, the bars in each mat shall be placed in matching alignment to reduce congestion. Reinforcing bars may be temporarily crowded to one side during concrete placement provided they are returned to exact required location before concrete placement and consolidation are completed.

3.8.8 Placing Flowable Concrete

If a plasticizing admixture conforming to ASTM C 1017 is used or if a Type F or G high range water reducing admixture is permitted to increase the slump, the concrete shall meet all requirements of paragraph GENERAL REQUIREMENTS in PART 1. Extreme care shall be used in conveying and placing the concrete to avoid segregation. Consolidation and finishing shall meet all requirements of paragraphs Placing Concrete, Finishing Formed Surfaces, and Finishing Unformed Surfaces. No relaxation of requirements to accommodate flowable concrete will be permitted.

3.9 JOINTS

Joints shall be located and constructed as indicated or approved. Joints not indicated on the drawings shall be located and constructed to minimize the impact on the strength of the structure. In general, such joints shall be located near the middle of the spans of supported slabs, beams, and girders unless a beam intersects a girder at this point, in which case the joint in the girder shall be offset a distance equal to twice the width of the beam. Joints in walls and columns shall be at the underside of floors, slabs, beams, or girders and at the tops of footings or floor slabs, unless otherwise approved. Joints shall be perpendicular to the main reinforcement. All reinforcement shall be continued across joints; except that reinforcement or other fixed metal items shall not be continuous through expansion joints, or through construction or contraction joints in slabs on grade. Reinforcement shall be 50 mm clear from each joint. The perimeters of the slabs shall be free of fins, rough edges, spalling, or other unsightly appearance. Reservoir for sealant for construction and contraction joints in slabs shall be formed to the dimensions shown on the drawings by removing snap-out joint-forming inserts, by sawing sawable inserts, or by sawing to widen the top portion of sawed joints. Joints to be sealed shall be cleaned and sealed as indicated and in accordance with SECTION: 07900, JOINT SEALING.

3.9.1 Construction Joints

For concrete other than slabs on grade, construction joints shall be located so that the unit of operation does not exceed 20 meters. Concrete shall be placed continuously so that each unit is monolithic in construction. Fresh concrete shall not be placed against adjacent hardened concrete until it is at least 24 hours old. Construction joints shall be located as indicated or approved. Where concrete work is interrupted by weather, end of work shift or other similar type of delay, location and type of construction joint shall be subject to approval of the Contracting Officer. Unless otherwise indicated and except for slabs on grade, reinforcing steel shall extend through construction joints. Construction joints in slabs on grade shall be keyed or doweled as shown. Concrete columns, walls, or piers shall be in place at least 2 hours, or until the concrete begins to lose its plasticity, before placing concrete for beams, girders, or slabs thereon. In walls having door or window openings, lifts shall terminate at the top and bottom of the opening. Other lifts shall terminate at such levels as to conform to structural requirements or architectural details. Where horizontal construction joints in walls or columns are required, a strip of 25 mm square-edge lumber, bevelled and oiled to facilitate removal, shall be tacked to the inside of the forms at the construction joint. Concrete shall be placed to a point 25 mm above the underside of the strip. The strip shall be removed 1 hour after the concrete has been placed, and any irregularities in the joint line shall be leveled off with a wood float, and all laitance shall be removed. Prior to placing additional concrete, horizontal construction joints shall be prepared as specified in paragraph Previously Placed Concrete.

3.9.2 Contraction Joints in Slabs on Grade

Contraction joints shall be located and detailed as shown on the drawings. Contraction Joints shall be produced by forming a weakened plane in the concrete slab by use of rigid inserts impressed in the concrete during placing operations, use of snap-out plastic joint forming inserts or sawing a continuous slot with a concrete saw. Regardless of method used to produce the weakened plane, it shall be 1/4 the depth of the slab thickness and between 3 and 5 mm wide. For saw-cut joints, cutting shall be timed properly with the set of the concrete. Cutting shall be started as soon as the concrete has hardened sufficiently to prevent ravelling of the edges of the saw cut. Cutting shall be completed before shrinkage stresses become sufficient to produce cracking. Reservoir for joint sealant shall be formed as previously specified.

3.9.3 Expansion Joints

Installation of expansion joints and sealing of these joints shall conform to the requirements of SECTION: 03150 EXPANSION JOINTS, CONTRACTION JOINTS, AND WATERSTOPS and SECTION: 07900 JOINT SEALING.

3.9.4 Waterstops

Waterstops shall be installed in conformance with the locations and details shown on the drawings using materials and procedures specified in SECTION: 03150 EXPANSION JOINTS, CONTRACTION JOINTS, AND WATERSTOPS.

3.9.5 Dowels and Tie Bars

Dowels and tie bars shall be installed at the locations shown on the drawings and to the details shown, using materials and procedures specified in SECTION: 03200 CONCRETE REINFORCEMENT and herein. Conventional smooth "paving" dowels shall be installed in slabs using approved methods to hold the dowel in place during concreting within a maximum alignment tolerance of 1 mm in 100 mm (1/8 inch in 12 inches). "Structural" type deformed bar dowels, or tie bars, shall be installed to meet the specified tolerances. Care shall be taken during placing adjacent to and around dowels and tie bars to ensure there is no displacement of the dowel or tie bar and that the concrete completely embeds the dowel or tie bar and is thoroughly consolidated.

3.10 FINISHING FORMED SURFACES

Forms, form materials, and form construction are specified in SECTION: 03100 STRUCTURAL CONCRETE FORMWORK. Finishing of formed surfaces shall be as specified herein. Unless another type of architectural or special finish is specified, surfaces shall be left with the texture imparted by the forms except that defective surfaces shall be repaired. Unless painting of surfaces is required, uniform color of the concrete shall be maintained by use of only one mixture without changes in materials or proportions for any structure or portion of structure that requires a Class A or B finish. Except for major defects, as defined hereinafter, surface defects shall be repaired as specified herein within 24 hours after forms are removed. Repairs of the so-called "plaster-type" will not be permitted in any location. Tolerances of formed surfaces shall conform to the requirements of ACI 117/A117R. These tolerances apply to the finished concrete surface, not to the forms themselves; forms shall be set true to line and grade. Form tie holes requiring repair and other defects whose depth is at least as great as their surface diameter shall be repaired as specified in paragraph Damp-Pack Mortar Repair. Defects whose surface diameter is greater than their depth shall be repaired as specified in paragraph Repair of Major Defects. Repairs shall be finished flush with adjacent surfaces and with the same surface texture. The cement used for all repairs shall be a blend of job cement with white cement proportioned so that the final color after curing and aging will be the same as the adjacent concrete. Concrete with excessive honeycomb, or other defects which affect the strength of the member, will be rejected. Repairs shall be demonstrated to be acceptable and free from cracks or loose or drummy areas at the completion of the contract and, for Class A and B Finishes, shall be inconspicuous. Repairs not meeting these requirements will be rejected and shall be replaced.

3.10.1 Class A Finish and Class B Finish

Class A finish is required where indicated on the drawings. Class B finish is required where indicated on the drawings. Fins, ravelings, and loose material shall be removed, all surface defects over 12 mm in diameter or more than 12 mm deep, shall be repaired and, except as otherwise indicated or as specified in SECTION: 03100 STRUCTURAL CONCRETE FORMWORK, holes left by removal of form ties shall be reamed and filled. Defects more than 12 mm in diameter shall be cut back to sound concrete, but in all cases at least 25 mm deep. The Contractor shall prepare a sample panel for approval (as specified in PART 1) before commencing repair, showing that the surface texture and color match will be attained. Metal tools shall not be used to finish repairs in Class A surfaces.

3.10.2 Class C and Class D Finish

Class C finish is required where indicated on the drawings. Class D finish is required where indicated on the drawings. Fins, ravelings, and loose material shall be removed, and, except as otherwise indicated or as specified in SECTION: 03100 STRUCTURAL CONCRETE FORMWORK, holes left by removal of form ties shall be reamed and filled. Honeycomb and other defects more than 12 mm deep or more than 50 mm in diameter shall be repaired. Defects more than 50 mm in diameter shall be cut back to sound concrete, but in all cases at least 25 mm deep.

3.10.3 Architectural and Special Finishes

Architectural concrete finishes are specified in SECTION: 03413, PRECAST ARCHITECTURAL CONCRETE. Special finishes shall conform to the requirements specified herein.

3.11 REPAIRS

3.11.1 Damp-Pack Mortar Repair

Form tie holes ~~requiring repair~~ and other defects whose depth is at least as great as their surface diameter but not over 100 mm shall be repaired by the damp-pack mortar method. Form tie holes shall be reamed and other similar defects shall be cut out to sound concrete. The void shall then be thoroughly cleaned, thoroughly wetted, brush-coated with a thin coat of neat cement grout and filled with mortar. Mortar shall be a stiff mix of one part portland cement to two parts fine aggregate passing the 1.18 mm sieve, and minimum amount of water. Only sufficient water shall be used to produce a mortar which, when used, will stick together on being molded into a ball by a slight pressure of the hands and will not exude water but will leave the hands damp. Mortar shall be mixed and allowed to stand for 30 to 45 minutes before use with remixing performed immediately prior to use. Mortar shall be thoroughly tamped in place in thin layers using a hammer and hardwood block. Holes passing entirely through walls shall be completely filled from the inside face by forcing mortar through to the outside face. All holes shall be packed full. Damp-pack repairs shall be moist cured for at least 48 hours.

3.11.2 Repair of Major Defects

Major defects will be considered to be those more than 12 mm deep or, for Class A and B finishes, more than 12 mm in diameter and, for Class C and D finishes, more than 50 mm in diameter. Also included are any defects of any kind whose depth is over 100 mm or whose surface diameter is greater than their depth. Major defects shall be repaired as specified below.

3.11.2.1 Surface Application of Mortar Repair

Defective concrete shall be removed, and removal shall extend into completely sound concrete. Approved equipment and procedures which will not cause cracking or microcracking of the sound concrete shall be used. If reinforcement is encountered, concrete shall be removed so as to expose the reinforcement for at least 50 mm on all sides. All such defective areas greater than 7800 square mm shall be outlined by saw cuts at least 25 mm deep. Defective areas less than 7800 square mm shall be outlined by a 25 mm deep cut with a core drill in lieu of sawing. All saw cuts shall be straight lines in a rectangular pattern in line with the formwork panels. After concrete removal, the surface shall be thoroughly cleaned by high pressure washing to remove all loose material. Surfaces shall be kept continually saturated for the first 12 of the 24 hours immediately before placing mortar and shall be damp but not wet at the time of commencing mortar placement. The Contractor, at his option, may use either hand-placed mortar or mortar placed with a mortar gun. If hand-placed mortar is used, the edges of the cut shall be perpendicular to the surface of the concrete. The prepared area shall be brush-coated with a thin coat of neat cement grout. The repair shall then be made using a stiff mortar, preshrunk by allowing the mixed mortar to stand for 30 to 45 minutes and then remixed, thoroughly tamped into place in thin layers. If hand-placed mortar is used, the Contractor shall test each repair area for drumminess by firm tapping with a hammer and shall inspect for cracks, both in the presence of the Contracting Officer's representative, immediately before completion of the contract, and shall replace any showing drumminess or cracking. If mortar placed with a mortar gun is used, the gun shall be a small compressed air-operated gun to which the mortar is slowly hand fed and which applies the mortar to the surface as a high-pressure stream, as approved. Repairs made using shotcrete equipment will not be accepted. The mortar used shall be the same mortar as specified for damp-pack mortar repair. If gun-placed mortar is used, the edges of the cut shall be beveled toward the center at a slope of 1:1. All surface applied mortar repairs shall be continuously moist cured for at least 7 days. Moist curing shall consist of several layers of saturated burlap applied to the surface immediately after placement is complete and covered with polyethylene sheeting, all held closely in place by a sheet of plywood or similar material rigidly braced against it. Burlap shall be kept continually wet.

3.11.2.2 Repair of Deep and Large Defects

Deep and large defects will be those that are more than 150 mm deep and also have an average diameter at the surface more than 450 mm or that are otherwise so identified by the Project Office. Such defects shall be repaired as specified herein or directed, except that defects which affect the strength of the structure shall not be repaired and that portion of the structure shall be completely removed and replaced. Deep and large defects shall be repaired by procedures approved in advance including forming and placing special concrete using applied pressure during hardening. Preparation of the repair area shall be as specified for surface application of mortar. In addition, the top edge (surface) of the repair area shall be sloped at approximately 20 degrees from the horizontal, upward toward the side from which concrete will be placed. The special concrete shall be a concrete mixture with low water content and low slump, and shall be allowed to age 30 to 60 minutes before use. Concrete containing a specified expanding admixture may be used in lieu of the above mixture; the paste portion of such concrete mixture shall be designed to have an expansion between 2 and 4 percent when tested in accordance with ASTM C 940. A full width "chimney" shall be provided at the top of the form on the placing side to ensure filling to the top of the opening. A pressure cap shall be used on the concrete in the chimney with simultaneous tightening and revibrating the form during hardening to ensure a tight fit for the repair. The form shall be removed after 24 hours and immediately the chimney shall be carefully chipped away to avoid breaking concrete out of the repair; the surface of the repair concrete shall be dressed as required.

3.11.3 Resinous and Latex Material Repair

In lieu of the portland cement bonding coats specified above, an epoxy resin or a latex bonding agent may be used.

3.12 FINISHING UNFORMED SURFACES

The finish of all unformed surfaces shall meet the requirements of paragraph Tolerances in PART 1, when tested as specified herein.

3.12.1 General

The ambient temperature of spaces adjacent to unformed surfaces being finished and of the base on which concrete will be placed shall be not less than 10 degrees C. In hot weather all requirements of paragraphs Hot Weather Requirements and Prevention of Plastic Shrinkage Cracking shall be met. Unformed surfaces that are not to be covered by additional concrete or backfill shall have a float finish, with additional finishing as specified below, and shall be true to the elevation shown on the drawings. Surfaces to receive additional concrete or backfill shall be brought to the elevation shown on the drawings, properly consolidated, and left true and regular. Unless otherwise shown on the drawings, exterior surfaces shall be sloped for drainage, as directed. Where drains are provided, interior floors shall be evenly sloped to the drains. Joints shall be carefully made with a jointing or edging tool. The finished surfaces shall be protected from stains or abrasions. Grate tampers or "jitterbugs" shall not be used for any surfaces. The dusting of surfaces with dry cement or other materials or the addition of any water during finishing shall not be permitted. If bleedwater is present prior to finishing, the excess water shall be carefully dragged off or removed by absorption with porous materials such as burlap. During finishing operations, extreme care shall be taken to prevent over finishing or working water into the surface; this can cause "crazing" (surface shrinkage cracks which appear after hardening) of the surface. Any slabs with surfaces which exhibit significant crazing shall be removed and replaced. During finishing operations, surfaces shall be checked with a 10-foot straightedge, applied in both directions at regular intervals while the concrete is still plastic, to detect high or low areas.

3.12.2 Rough Slab Finish

As a first finishing operation for unformed surfaces and as final finish for slabs to receive mortar setting beds, the surface shall receive a rough slab finish prepared as follows. The concrete shall be uniformly placed across the slab area, consolidated as previously specified, and then screeded with straightedge strikeoffs immediately after consolidation to bring the surface to the required finish level with no coarse aggregate visible. Side forms and screed rails shall be provided, rigidly supported, and set to exact line and grade. Allowable tolerances for finished surfaces apply only to the hardened concrete, not to forms or screed rails. Forms and screed rails shall be set true to line and grade. "Wet screeds" shall not be used.

3.12.3 Floated Finish

Slabs to receive more than a rough slab finish shall next be given a wood float finish. Areas as indicated on the drawings. The screeding shall be followed immediately by darbying or bull floating before bleeding water is present, to bring the surface to a true, even plane. Then, after the concrete has stiffened so that it will withstand a man's weight without imprint of more than 6 mm and the water sheen has disappeared, it shall be floated to a true and even plane free of ridges. Floating shall be performed by use of suitable hand floats or power driven equipment. Sufficient pressure shall be used on the floats to bring a film of moisture to the surface. Hand floats shall be made of wood, magnesium, or aluminum. Lightweight concrete or concrete that exhibits stickiness shall be floated with a magnesium float. Care shall be taken to prevent over-finishing or incorporating water into the surface.

3.12.4 Troweled Finish

Areas as indicated on the drawings. After floating is complete and after the surface moisture has disappeared, unformed surfaces shall be steel-troweled to a smooth, even, dense finish, free from blemishes including trowel marks. In lieu of hand finishing, an approved power finishing machine may be used in accordance with the directions of the machine manufacturer. Additional trowelings shall be performed, either by hand or machine until the surface has been troweled two times, with waiting period between each. Care shall be taken to prevent blistering and if such occurs, troweling shall immediately be stopped and operations and surfaces corrected. A final hard steel troweling shall be done by hand, with the trowel tipped, and using hard pressure, when the surface is at a point that the trowel will produce a ringing sound. The finished surface shall be thoroughly consolidated and shall be essentially free of trowel marks and be uniform in texture and appearance. The concrete mixture used for troweled finished areas shall be adjusted, if necessary, in order to provide sufficient fines (cementitious material and fine sand) to finish properly.

3.12.5 Omitted

3.12.6 Non-Slip Finish

Non-slip floors shall be constructed in accordance with the following subparagraphs.

3.12.6.1 Broomed

Areas as indicated on the drawings. After floating, the surface shall be lightly steel troweled, and then carefully scored by pulling a coarse fiber push-type broom across the surface. Brooming shall be transverse to traffic or at right angles to the slope of the slab. After the end of the curing period, the surface shall be vigorously broomed with a coarse fiber broom to remove all loose or semi-detached particles.

3.12.7 Omitted

3.12.8 Heavy Duty Floors

3.12.8.1 General

Heavy duty floor shall be constructed by placing a heavy duty bonded topping on a base slab which has had a rough slab finish left 50 mm below final grade. Concrete in the base slab shall be thoroughly hardened but not more than 30 hours old. The temperature of the fresh concrete topping shall not vary more than 5 degrees C plus or minus from the temperature of the base slab. The ambient temperature of the space adjacent to the concrete placement and of the base slab shall be between 10 and 30 degrees C.

3.12.8.2 Preparation of Base Slab

The base slab shall be kept continuously damp until topping is placed. The surface of the base slab shall be thoroughly cleaned with an air-water jet immediately before placing the topping. A thin coat of neat cement grout of about the consistency of thick cream shall be thoroughly scrubbed into the existing surface immediately ahead of the overlay placing. At the time the neat cement grout is placed, the existing concrete surface shall be damp but shall have no free water present. The overlay concrete shall be deposited before the grout coat has had time to stiffen.

3.12.8.3 Placing and Finishing

Concrete shall be placed, as nearly as practicable in final position, in a uniform layer. The overlay shall be placed and screeded slightly above the required finished grade, compacted by rolling with rollers weighing not less than 4.5 kg per linear 25 mm of roller width or by approved tamping equipment and finish screeded to established grade. Grid type tampers shall not be used. The concrete, while still green but sufficiently hardened to bear a person's weight without deep imprint, shall be floated to a true even plane with no coarse aggregate visible. Floating shall be performed with an approved disc-type mechanical float which has integral impact mechanism. The surface of the overlay shall then be left undisturbed until the concrete has hardened enough to prevent excess fines from being worked to the top. Joints shall be formed to match those in the base slab.

3.12.8.4 Curing and Protection

Concrete shall be maintained in a moist condition and shall be protected against rapid temperature change, mechanical injury, and injury from rain or flowing water, for a curing period of not less than 10 days. Concrete shall be maintained in a moist condition at temperatures above 10 and below 30 degrees C throughout the specified curing period. Concrete shall be protected from a temperature change greater than 3 degrees C per hour and from rapid drying for the first 24 hours following the removal of temperature protection. Curing activities shall begin as soon as free water has disappeared from the concrete surface after placing and finishing. Curing shall be moist curing accomplished by the following method. Surfaces shall be covered with a double layer of burlap, wetted before placing, and overlapped at least 150 mm. Burlap shall be kept continually wet and in intimate contact with the surface. Burlap shall be kept covered with a polyethylene sheeting at least 0.1 mm thick. All traffic shall be kept from the floor during the curing period and heavy traffic shall be kept off till 28-day age.

3.13 FLOOR HARDENER

Areas as indicated on the drawings shall be treated with floor hardener. Floor hardener shall be applied after the concrete has been cured and then air dried for 14 days. Three coats shall be applied, each the day after the preceding coat was applied. For the first application, 0.5 kg of the silocofluoride shall be dissolved in 4 liters of water. For subsequent applications, the solution shall be 1 kg of silicofluoride to each 4 liters of

water. Floor should be mopped with clear water shortly after the preceding application has dried to remove encrusted salts. Proprietary hardeners shall be applied in accordance with the manufacturer's instructions. During application, area should be well ventilated. Precautions shall be taken when applying silicofluorides due to the toxicity of the salts. Any compound that contacts glass or aluminum should be immediately removed with clear water.

3.14 EXTERIOR SLAB AND RELATED ITEMS

3.14.1 Pavements

Pavements shall be constructed where shown on the drawings. After forms are set and underlying material prepared as specified, the concrete shall be placed uniformly throughout the area and thoroughly vibrated. As soon as placed and vibrated, the concrete shall be struck off and screeded to the crown and cross section and to such elevation above grade that when consolidated and finished, the surface of the pavement will be at the required elevation. The entire surface shall be tamped with the strike off, or consolidated with a vibrating screed, and this operation continued until the required compaction and reduction of internal and surface voids are accomplished. Care shall be taken to prevent bringing excess paste to the surface. Immediately following the final consolidation of the surface, the pavement shall be floated longitudinally from bridges resting on the side forms and spanning but not touching the concrete. If necessary, additional concrete shall be placed and screeded, and the float operated until a satisfactory surface has been produced. The floating operation shall be advanced not more than half the length of the float and then continued over the new and previously floated surfaces. After finishing is completed but while the concrete is still plastic, minor irregularities and score marks in the pavement surface shall be eliminated by means of long-handled cutting straightedges. Straightedges shall be 3.75 m in length and shall be operated from the sides of the pavement and from bridges. A straightedge operated from the side of the pavement shall be equipped with a handle 1 m longer than one-half the width of the pavement. The surface shall then be tested for trueness with a 3.75 straightedge held in successive positions parallel and at right angles to the center line of the pavement, and the whole area covered as necessary to detect variations. The straightedge shall be advanced along the pavement in successive stages of not more than one-half the length of the straightedge. Depressions shall be immediately filled with freshly mixed concrete, struck off, consolidated, and refinished. Projections above the required elevation shall also be struck off and refinished. The straightedge testing and finishing shall continue until the entire surface of the concrete is true. Before the surface sheen has disappeared and well before the concrete becomes nonplastic, the surface of the pavement shall be given a nonslip sandy surface texture by use of a burlap drag. A strip of clean, wet burlap from 1.0 to 1.5 m wide and 0.7 m longer than the pavement width shall be carefully pulled across the surface. Edges and joints shall be rounded with an edger having a radius of 3 mm. Curing shall be as specified.

3.14.2 Sidewalks

Concrete shall be 100 mm minimum thickness. Contraction joints shall be provided at 1.75 m spaces unless otherwise indicated. Contraction joints shall be cut 25 mm deep with a jointing tool after the surface has been finished. Transverse expansion joints 12 mm thick shall be provided at changes in direction and where sidewalk abuts curbs, steps, rigid pavement, or other similar structures. Sidewalks shall be given a lightly broomed finish. A transverse slope of 1 mm per 50 mm shall be provided, unless otherwise indicated. Variations in cross section shall be limited to 1 mm per 250 mm.

3.14.3 Curbs and Gutters

Concrete shall be formed, placed, and finished by hand using a properly shaped "mule" or constructed using a slipform machine specially designed for this work. Contraction joints shall be cut 75 mm deep with a

jointing tool after the surface has been finished. Expansion joints (12 mm wide) shall be provided at 35 m maximum spacing unless otherwise indicated. Exposed surfaces shall be finished using a stiff bristled brush.

3.14.4 Pits and Trenches

Pits and trenches shall be constructed as indicated on the drawings. Bottoms and walls shall be placed monolithically or waterstops and keys, shall be provided as approved.

3.15 CURING AND PROTECTION

3.15.1 General

Concrete shall be cured by an approved method for the period of time given below:

Concrete with Type III cement	3 days
All other concrete	7 days

Immediately after placement, concrete shall be protected from premature drying, extremes in temperatures, rapid temperature change, mechanical injury and damage from rain and flowing water for the duration of the curing period. Air and forms in contact with concrete shall be maintained at a temperature above 10 degrees C for the first 3 days and at a temperature above 0 degrees C for the remainder of the specified curing period. Exhaust fumes from combustion heating units shall be vented to the outside of the enclosure, and heaters and ducts shall be placed and directed so as not to cause areas of overheating and drying of concrete surfaces or to create fire hazards. Materials and equipment needed for adequate curing and protection shall be available and at the site prior to placing concrete. No fire or excessive heat, including welding, shall be permitted near or in direct contact with the concrete at any time. Except as otherwise permitted by paragraph Membrane Forming Curing Compounds, moist curing shall be provided for any areas to receive floor hardener, any paint or other applied coating, or to which other concrete is to be bonded. Concrete containing silica fume shall be initially cured by fog misting during finishing, followed immediately by continuous moist curing. Except for plastic coated burlap, impervious sheeting alone shall not be used for curing.

3.15.2 Moist Curing

Concrete to be moist-cured shall be maintained continuously wet for the entire curing period, commencing immediately after finishing. If water or curing materials used stain or discolor concrete surfaces which are to be permanently exposed, the concrete surfaces shall be cleaned as approved. When wooden forms are left in place during curing, they shall be kept wet at all times. If steel forms are used in hot weather, nonsupporting vertical forms shall be broken loose from the concrete soon after the concrete hardens and curing water continually applied in this void. If the forms are removed before the end of the curing period, curing shall be carried out as on unformed surfaces, using suitable materials. Surfaces shall be cured by ponding, by continuous sprinkling, by continuously saturated burlap or cotton mats, or by continuously saturated plastic coated burlap. Burlap and mats shall be clean and free from any contamination and shall be completely saturated before being placed on the concrete. The Contractor shall have an approved work system to ensure that moist curing is continuous 24 hours per day.

3.15.3 Membrane Forming Curing Compounds

Membrane forming curing compounds shall be used only on surfaces in the following areas. Membrane curing shall not be used on surfaces that are to receive any subsequent treatment depending on adhesion or bonding to the concrete, including surfaces to which a smooth finish is to be applied or other concrete to be

bonded. However, a styrene acrylate or chlorinated rubber compound meeting ASTM C 309, Class B requirements, may be used for surfaces which are to be painted or are to receive bituminous roofing or waterproofing, or floors that are to receive adhesive applications of resilient flooring. The curing compound selected shall be compatible with any subsequent paint, roofing, waterproofing or flooring specified. Membrane curing compound shall not be used on surfaces that are maintained at curing temperatures with free steam. Curing compound shall be applied to formed surfaces immediately after the forms are removed and prior to any patching or other surface treatment except the cleaning of loose sand, mortar, and debris from the surface. All surfaces shall be thoroughly moistened with water. Curing compound shall be applied to slab surfaces as soon as the bleeding water has disappeared, with the tops of joints being temporarily sealed to prevent entry of the compound and to prevent moisture loss during the curing period. The curing compound shall be applied in a two-coat continuous operation by approved motorized power-spraying equipment operating at a minimum pressure of 500 kPa (75 psi), at a uniform coverage of not more than 10 cubic meters per L (400 square feet per gallon) for each coat, and the second coat shall be applied perpendicular to the first coat. Concrete surfaces which have been subjected to rainfall within 3 hours after curing compound has been applied shall be resprayed by the method and at the coverage specified. Surfaces on which clear compound is used shall be shaded from direct rays of the sun for the first 3 days. Surfaces coated with curing compound shall be kept free of foot and vehicular traffic, and from other sources of abrasion and contamination during the curing period.

3.15.4 Omitted

3.15.5 Omitted

3.15.6 Cold Weather Curing and Protection

When the daily ambient low temperature is less than 0 degrees C the temperature of the concrete shall be maintained above 5 degrees C for the first seven days after placing. During the period of protection removal, the air temperature adjacent to the concrete surfaces shall be controlled so that concrete near the surface will not be subjected to a temperature differential of more than 13 degrees C as determined by suitable temperature measuring devices furnished by the Government, as required, and installed adjacent to the concrete surface and 50 mm inside the surface of the concrete. The installation of the thermometers shall be made by the Contractor as directed.

3.16 SETTING BASE PLATES AND BEARING PLATES

After being properly positioned, column base plates, bearing plates for beams and similar structural members, and machinery and equipment base plates shall be set to the proper line and elevation with damp-pack bedding mortar, except where nonshrink grout is indicated. The thickness of the mortar or grout shall be approximately 1/24 the width of the plate, but not less than 20 mm. Concrete and metal surfaces in contact with grout shall be clean and free of oil and grease, and concrete surfaces in contact with grout shall be damp and free of laitance when grout is placed.

3.16.1 Damp-Pack Bedding Mortar

Damp-pack bedding mortar shall consist of one part cement and 2-1/2 parts fine aggregate having water content such that a mass of mortar tightly squeezed in the hand will retain its shape but will crumble when disturbed. The space between the top of the concrete and bottom of the bearing plate or base shall be packed with the bedding mortar by tamping or ramming with a bar or rod until it is completely filled.

3.16.2 Nonshrink Grout

Nonshrink grout shall be a ready-mixed material requiring only the addition of water. Water content shall be the minimum that will provide a flowable mixture and completely fill the space to be grouted without segregation, bleeding, or reduction of strength.

3.16.2.1 Mixing and Placing of Nonshrink Grout

Mixing and placing shall be in conformance with the material manufacturer's instructions and as specified therein. Ingredients shall be thoroughly dry-mixed before adding water. After adding water, the batch shall be mixed for 3 minutes. Batches shall be of size to allow continuous placement of freshly mixed grout. Grout not used within 30 minutes after mixing shall be discarded. The space between the top of the concrete or machinery-bearing surface and the plate shall be filled solid with the grout. Forms shall be of wood or other equally suitable material for completely retaining the grout on all sides and on top and shall be removed after the grout has set. The placed grout shall be carefully worked by rodding or other means to eliminate voids; however, overworking and breakdown of the initial set shall be avoided. Grout shall not be retempered or subjected to vibration from any source. Where clearances are unusually small, placement shall be under pressure with a grout pump. Temperature of the grout, and of surfaces receiving the grout, shall be maintained at 18 to 30 degrees C until after setting.

3.16.2.2 Treatment of Exposed Surfaces

For metal-oxidizing nonshrink grout, exposed surfaces shall be cut back 25 mm and immediately covered with a parge coat of mortar consisting of one part portland cement and 2-1/2 parts fine aggregate by weight, with sufficient water to make a plastic mixture. The parge coat shall have a smooth finish. For other mortars or grouts, exposed surfaces shall have a smooth-dense finish and be left untreated. Curing shall comply with paragraph CURING AND PROTECTION.

3.17 TESTING AND INSPECTION FOR CONTRACTOR QUALITY CONTROL

The Contractor shall perform the inspection and tests described below and, based upon the results of these inspections and tests, shall take the action required and shall submit specified reports. When, in the opinion of the Contracting Officer, the concreting operation is out of control, concrete placement shall cease and the operation shall be corrected. The laboratory performing the tests shall be onsite and shall conform with ASTM C 1077. Materials may be subjected to check testing by the Government from samples obtained at the manufacturer, at transfer points, or at the project site. The Government will inspect the laboratory, equipment, and test procedures prior to start of concreting operations and at least once per month thereafter for conformance with ASTM C 1077.

3.17.1 Grading and Corrective Action

3.17.1.1 Fine Aggregate

At least once during each shift when the concrete plant is operating, there shall be one sieve analysis and fineness modulus determination in accordance with ASTM C 136 and COE CRD-C 104 for the fine aggregate or for each fine aggregate if it is batched in more than one size or classification. The location at which samples are taken may be selected by the Contractor as the most advantageous for control. However, the Contractor is responsible for delivering fine aggregate to the mixer within specification limits. When the amount passing on any sieve is outside the specification limits, the fine aggregate shall be immediately resampled and retested. If there is another failure on any sieve, the fact shall immediately reported to the Contracting Officer, concreting shall be stopped, and immediate steps taken to correct the grading.

3.17.1.2 Coarse Aggregate

At least once during each shift in which the concrete plant is operating, there shall be a sieve analysis in accordance with ASTM C 136 for each size of coarse aggregate. The location at which samples are taken may be selected by the Contractor as the most advantageous for production control. However, the Contractor shall be responsible for delivering the aggregate to the mixer within specification limits. A test record of samples of aggregate taken at the same locations shall show the results of the current test as well as the average results of the five most recent tests including the current test. The Contractor may adopt limits for control coarser than the specification limits for samples taken other than as delivered to the mixer to allow for degradation during handling. When the amount passing any sieve is outside the specification limits, the coarse aggregate shall be immediately resampled and retested. If the second sample fails on any sieve, that fact shall be reported to the Contracting Officer. Where two consecutive averages of five tests are outside specification limits, the operation shall be considered out of control and shall be reported to the Contracting Officer. Concreting shall be stopped and immediate steps shall be taken to correct the grading.

3.17.2 Quality of Aggregates

Thirty days prior to the start of concrete placement, the Contractor shall perform all tests for aggregate quality required by ASTM C 33. In addition, after the start of concrete placement, the Contractor shall perform tests for aggregate quality at least every three months, and when the source of aggregate or aggregate quality changes. Samples tested after the start of concrete placement shall be taken immediately prior to entering the concrete mixer.

3.17.3 Scales, Batching and Recording

The accuracy of the scales shall be checked by test weights prior to start of concrete operations and at least once every three months. Such tests shall also be made as directed whenever there are variations in properties of the fresh concrete that could result from batching errors. Once a week the accuracy of each batching and recording device shall be checked during a weighing operation by noting and recording the required weight, recorded weight, and the actual weight batched. At the same time, the Contractor shall test and ensure that the devices for dispensing admixtures are operating properly and accurately. When either the weighing accuracy or batching accuracy does not comply with specification requirements, the plant shall not be operated until necessary adjustments or repairs have been made. Discrepancies in recording accuracies shall be corrected immediately.

3.17.4 Batch-Plant Control

The measurement of concrete materials including cementitious materials, each size of aggregate, water, and admixtures shall be continuously controlled. The aggregate weights and amount of added water shall be adjusted as necessary to compensate for free moisture in the aggregates. The amount of air-entraining agent shall be adjusted to control air content within specified limits. A report shall be prepared indicating type and source of cement used, type and source of pozzolan or slag used, amount and source of admixtures used, aggregate source, the required aggregate and water weights per cubic meter (cubic yard), amount of water as free moisture in each size of aggregate, and the batch aggregate and water weights per cubic meter (cubic yard) for each class of concrete batched during each day's plant operation.

3.17.5 Concrete Mixture

a. Air Content Testing. Air content tests shall be made when test specimens are fabricated. In addition, at least two tests for air content shall be made on randomly selected batches of each separate concrete mixture produced during each 8-hour period of concrete production. Additional tests shall be made when

excessive variation in workability is reported by the placing foreman or Government inspector. Tests shall be made in accordance with ASTM C 231 for normal weight concrete and ASTM C 173 for lightweight concrete. Test results shall be plotted on control charts which shall at all times be readily available to the Government and shall be submitted weekly. Copies of the current control charts shall be kept in the field by testing crews and results plotted as tests are made. When a single test result reaches either the upper or lower action limit, a second test shall immediately be made. The results of the two tests shall be averaged and this average used as the air content of the batch to plot on both the air content and the control chart for range, and for determining need for any remedial action. The result of each test, or average as noted in the previous sentence, shall be plotted on a separate control chart for each mixture on which an "average line" is set at the midpoint of the specified air content range from paragraph Air Entrainment. An upper warning limit and a lower warning limit line shall be set 1.0 percentage point above and below the average line, respectively. An upper action limit and a lower action limit line shall be set 1.5 percentage points above and below the average line, respectively. The range between each two consecutive tests shall be plotted on a secondary control chart for range where an upper warning limit is set at 2 percentage points and an upper action limit is set at 3 percentage points. Samples for air content may be taken at the mixer, however, the Contractor is responsible for delivering the concrete to the placement site at the stipulated air content. If the Contractor's materials or transportation methods cause air content loss between the mixer and the placement, correlation samples shall be taken at the placement site as required by the Contracting Officer, and the air content at the mixer controlled as directed.

b. Air Content Corrective Action. Whenever points on the control chart for percent air reach either warning limit, an adjustment shall immediately be made in the amount of air-entraining admixture batched. As soon as practical after each adjustment, another test shall be made to verify the result of the adjustment. Whenever a point on the secondary control chart for range reaches the warning limit, the admixture dispenser shall be recalibrated to ensure that it is operating accurately and with good reproducibility. Whenever a point on either control chart reaches an action limit line, the air content shall be considered out of control and the concreting operation shall immediately be halted until the air content is under control. Additional air content tests shall be made when concreting is restarted.

c. Slump Testing. In addition to slump tests which shall be made when test specimens are fabricated, at least four slump tests shall be made on randomly selected batches in accordance with ASTM C 143 for each separate concrete mixture produced during each 8-hour or less period of concrete production each day. Also, additional tests shall be made when excessive variation in workability is reported by the placing foreman or Government inspector. Test results shall be plotted on control charts which shall at all times be readily available to the Government and shall be submitted weekly. Copies of the current control charts shall be kept in the field by testing crews and results plotted as tests are made. When a single slump test reaches or goes beyond either the upper or lower action limit, a second test shall immediately be made. The results of the two tests shall be averaged and this average used as the slump of the batch to plot on both the control charts for slump and the chart for range, and for determining need for any remedial action. Limits shall be set on separate control charts for slump for each type of mixture. The upper warning limit shall be set at 12.5 mm below the maximum allowable slump specified in paragraph Slump in PART 1 for each type of concrete and an upper action limit line and lower action limit line shall be set at the maximum and minimum allowable slumps, respectively, as specified in the same paragraph. The range between each consecutive slump test for each type of mixture shall be plotted on a single control chart for range on which an upper action limit is set at 50 mm. Samples for slump shall be taken at the mixer. However, the Contractor is responsible for delivering the concrete to the placement site at the stipulated slump. If the Contractor's materials or transportation methods cause slump loss between the mixer and the placement, correlation samples shall be taken at the placement site as required by the Contracting Officer, and the slump at the mixer controlled as directed.

d. Slump Corrective Action. Whenever points on the control charts for slump reach the upper warning limit, an adjustment shall immediately be made in the batch weights of water and fine aggregate. The adjustments are to be made so that the total water content does not exceed that amount allowed by the maximum w/c ratio specified, based on aggregates which are in a saturated surface dry condition. When a single slump reaches the upper or lower action limit, no further concrete shall be delivered to the placing site until proper adjustments have been made. Immediately after each adjustment, another test shall be made to verify the correctness of the adjustment. Whenever two consecutive individual slump tests, made during a period when there was no adjustment of batch weights, produce a point on the control chart for range at or above the upper action limit, the concreting operation shall immediately be halted, and the Contractor shall take appropriate steps to bring the slump under control. Additional slump tests shall be made as directed.

e. Temperature. The temperature of the concrete shall be measured when compressive strength specimens are fabricated. Measurement shall be in accordance with ASTM C 1064. The temperature shall be reported along with the compressive strength data.

f. Strength Specimens. At least one set of test specimens shall be made, for compressive or flexural strength as appropriate, on each different concrete mixture placed during the day for each 380 cubic meters or portion thereof of that concrete mixture placed each day. Additional sets of test specimens shall be made, as directed by the Contracting Officer, when the mixture proportions are changed or when low strengths have been detected. A truly random (not haphazard) sampling plan shall be developed by the Contractor and approved by the Contracting Officer prior to the start of construction. The plan shall assure that sampling is done in a completely random and unbiased manner. A set of test specimens for concrete with a 28-day specified strength per paragraph Strength Requirements in PART 1 shall consist of four specimens, two to be tested at 7 days and two at 28 days. Test specimens shall be molded and cured in accordance with ASTM C 31 and tested in accordance with ASTM C 39 for test cylinders and ASTM C 78 for test beams. Results of all strength tests shall be reported immediately to the Contracting Officer. Quality control charts shall be kept for individual strength "tests," ("test" as defined in paragraph Strength Requirements in PART 1) moving average of last three "tests" for strength, and moving average for range for the last three "tests" for each mixture. The charts shall be similar to those found in ACI 214.3R.

3.17.6 Inspection Before Placing

Foundations, construction joints, forms, and embedded items shall be inspected by the Contractor in sufficient time prior to each concrete placement in order to certify to the Contracting Officer that they are ready to receive concrete. The results of each inspection shall be reported in writing.

3.17.7 Placing

The placing foreman shall supervise placing operations, shall determine that the correct quality of concrete or grout is placed in each location as specified and as directed by the Contracting Officer, and shall be responsible for measuring and recording concrete temperatures and ambient temperature hourly during placing operations, weather conditions, time of placement, volume placed, and method of placement. The placing foreman shall not permit batching and placing to begin until it has been verified that an adequate number of vibrators in working order and with competent operators are available. Placing shall not be continued if any pile of concrete is inadequately consolidated. If any batch of concrete fails to meet the temperature requirements, immediate steps shall be taken to improve temperature controls.

3.17.8 Vibrators

The frequency and amplitude of each vibrator shall be determined in accordance with COE CRD-C 521 prior to initial use and at least once a month when concrete is being placed. Additional tests shall be made

as directed when a vibrator does not appear to be adequately consolidating the concrete. The frequency shall be determined while the vibrator is operating in concrete with the tachometer being held against the upper end of the vibrator head while almost submerged and just before the vibrator is withdrawn from the concrete. The amplitude shall be determined with the head vibrating in air. Two measurements shall be taken, one near the tip and another near the upper end of the vibrator head, and these results averaged. The make, model, type, and size of the vibrator and frequency and amplitude results shall be reported in writing. Any vibrator not meeting the requirements of paragraph Consolidation, shall be immediately removed from service and repaired or replaced.

3.17.9 Curing Inspection

a. Moist Curing Inspections. At least once each shift, and not less than twice per day on both work and non-work days, an inspection shall be made of all areas subject to moist curing. The surface moisture condition shall be noted and recorded.

b. Moist Curing Corrective Action. When a daily inspection report lists an area of inadequate curing, immediate corrective action shall be taken, and the required curing period for those areas shall be extended by 1 day.

c. Membrane Curing Inspection. No curing compound shall be applied until the Contractor has verified that the compound is properly mixed and ready for spraying. At the end of each operation, the Contractor shall estimate the quantity of compound used by measurement of the container and the area of concrete surface covered, shall compute the rate of coverage in square meters per liter (square feet per gallon), and shall note whether or not coverage is uniform.

d. Membrane Curing Corrective Action. When the coverage rate of the curing compound is less than that specified or when the coverage is not uniform, the entire surface shall be sprayed again.

e. Sheet Curing Inspection. At least once each shift and once per day on non-work days, an inspection shall be made of all areas being cured using impervious sheets. The condition of the covering and the tightness of the laps and tapes shall be noted and recorded.

f. Sheet Curing Corrective Action. When a daily inspection report lists any tears, holes, or laps or joints that are not completely closed, the tears and holes shall promptly be repaired or the sheets replaced, the joints closed, and the required curing period for those areas shall be extended by 1 day.

3.17.10 Cold-Weather Protection

At least once each shift and once per day on non-work days, an inspection shall be made of all areas subject to cold-weather protection. Any deficiencies shall be noted, corrected, and reported.

3.17.11 Mixer Uniformity

a. Stationary Mixers. Prior to the start of concrete placing and once every 6 months when concrete is being placed, or once for every 60,000 cubic meters of concrete placed, whichever results in the shortest time interval, uniformity of concrete mixing shall be determined in accordance with ASTM C 94.

b. Truck Mixers. Prior to the start of concrete placing and at least once every 6 months when concrete is being placed, uniformity of concrete mixing shall be determined in accordance with ASTM C 94. The truck mixers shall be selected randomly for testing. When satisfactory performance is found in one truck

mixer, the performance of mixers of substantially the same design and condition of the blades may be regarded as satisfactory.

c. Mixer Uniformity Corrective Action. When a mixer fails to meet mixer uniformity requirements, either the mixing time shall be increased, batching sequence changed, batch size reduced, or adjustments shall be made to the mixer until compliance is achieved.

3.17.12 Reports

All results of tests or inspections conducted shall be reported informally as they are completed and in writing daily. A weekly report shall be prepared for the updating of control charts covering the entire period from the start of the construction season through the current week. During periods of cold-weather protection, reports of pertinent temperatures shall be made daily. These requirements do not relieve the Contractor of the obligation to report certain failures immediately as required in preceding paragraphs. Such reports of failures and the action taken shall be confirmed in writing in the routine reports. The Contracting Officer has the right to examine all contractor quality control records.

END OF SECTION

This page intentionally blank

SECTION 03300A

CONCRETE FOR DUMPSTER PADS

PART 1 GENERAL

1.1 REFERENCES

The publications listed below form a part of this specification to the extent referenced. The publications are referred to in the text by basic designation only.

1.1.1 ACI INTERNATIONAL (ACI)

ACI 318/318R	(1989; Rev 1992; Errata) Building Code Requirements for Reinforced Concrete

1.1.2 AMERICAN SOCIETY FOR TESTING AND MATERIALS (ASTM)

ASTM A 615	(1994) Deformed and Plain Billet-Steel Bars for Concrete Reinforcement
ASTM C 94	(1994) Ready-Mixed Concrete
ASTM C 309	(1993) Liquid Membrane-Forming Compounds for Curing Concrete

1.2.2 FEDERAL SPECIFICATIONS (Fed Spec)

TT-S-230	Sealing Compound, Single component, Chemically Curing (for Caulking), Sealing, and Glazing in Buildings and Other Structures)
TT-S-227	Sealing Compound: Elastomeric Type, Multi-Component (For Caulking, Sealing, and Glazing in Building and Other Structures)

1.2 SUBMITTALS

Government approval is required for submittals with a "GA" designation; submittals having an "FIO" designation are for information only. The following shall be submitted in accordance with SECTION: SUBMITTALS:

SD-13 Certificates

Cementitious Materials; GA.

Cement, pozzolan, and ground iron blast-furnace slag will be accepted on the basis of manufacturer's certification of compliance, accompanied by mill test reports attesting that the materials meet the requirements of the specification under which it is furnished. No cement, pozzolan, or slag shall be used until notice of acceptance has been given by the Contracting Officer. Cement, pozzolan, and slag may be subjected to check testing by the Government from samples obtained at the mill, at transfer points, or at the project site.

1.3 GENERAL REQUIREMENTS

1.3.1 Strength Requirements

Concrete slabs on-grade for the dumpster areas shall have a 28-day flexural strength of 4 MPa. Concrete made with high-early strength cement shall have a 7-day strength equal to the specified 28-day strength for concrete made with Type I or II portland cement.

1.3.2 Air Entrainment

All concrete shall contain from 4 to 7 percent total air.

1.3.3 Special Properties

Concrete may contain other admixtures, such as water reducers, superplasticizers, or set retarding agents to provide special properties to the concrete, if approved.

1.3.4 Slump

Slump shall be within the following limits:

Structural Element	Slump in millimeters	
	Minimum	Maximum
Slabs-on-grade	25	75

Where use of superplasticizers is approved to produce flowing concrete these slump requirements do not apply.

PART 2 PRODUCTS

2.1 CONCRETE INGREDIENTS

Concrete shall conform to ASTM C 94.

2.2 CURING MATERIALS

Curing materials shall be burlap, impervious sheets, or membrane-forming compounds.

2.3 EMBEDDED ITEMS

Embedded items shall be of the size and type indicated or as needed for the application. Dovetail slots shall be galvanized steel.

2.4 FORM MATERIALS

Forms for concrete surfaces shall be metal, plywood, or hardboard capable of producing the required surface without adverse effect on the concrete. Form coating shall be nonstaining form oil or form release agent that will not adversely affect the concrete surfaces or impair subsequent applications to the concrete. Form ties shall be metal, factory-fabricated, removable or snap-off type that will not leave holes less than 6 mm nor more than 25 mm deep and not more than 25 mm in diameter.

2.7 REINFORCEMENT

Bar reinforcement shall be deformed, Grade 60 billet steel conforming to ASTM A 615. ~~Mesh reinforcement shall be welded steel wire fabric with wires at right angles to each other.~~

2.8 ~~2.9~~ WATER

Water shall be potable.

2.9 ~~2.10~~ Joint Sealants

Cold-applied elastomeric type shall conform to Federal Specification TT-S-230, or TT-S-227.

PART 3 EXECUTION

3.1 PREPARATION OF SURFACES

Surfaces to receive concrete shall be clean and free from frost, ice, mud, and water. Conduit and other similar items shall be in place and clean of any deleterious substance. Surfaces shall be moist but without free water when the concrete is placed.

3.2 FORMWORK

Formwork shall be mortar-tight, properly aligned, and adequately supported to produce concrete conforming accurately to the indicated shapes, lines, dimensions, and with surfaces free of offsets, waviness, or bulges. Where surfaces are to be exposed or painted, panels shall be of uniform sizes, using smaller panels only where required by openings, joints or for closure. Unless otherwise shown, exposed external corners shall be chamfered, beveled or rounded by moldings placed in the forms. Form surfaces shall be thoroughly cleaned and coated before each use. Forms shall be removed at a time and in a manner that will not injure the concrete.

3.3 INSTALLATION OF REINFORCEMENT

Reinforcement shall be fabricated to the required shapes. Reinforcement shall be interrupted 50 mm on each side of expansion joints. Reinforcement shall be accurately positioned and secured in place.

3.6 INSTALLATION OF DOWELS AND OTHER EMBEDDED ITEMS

3.6.1 Dowels

Dowels in slabs on grade shall be installed at right angles to construction and expansion joints. They shall be accurately aligned parallel to the finished surface, and shall be rigidly supported during the placing of concrete. One end of dowels shall be oiled or greased. Dowel placement tolerance is $\pm$ 7.5 mm for both horizontal and vertical alignment.

3.6.2 Other Embedded Items

Embedded items shall be free from oil, loose scale or rust, and paint. Embedded items shall be installed at the locations indicated and required to serve the intended purpose. Voids in sleeves, slots and inserts shall be filled with readily removable material to prevent the entry of concrete.

3.7 BATCHING, MIXING AND TRANSPORTING CONCRETE

The work shall conform to ACI 318/318R part Construction Requirements, except as otherwise specified.

3.8 CONCRETE PLACEMENT

Concrete shall be handled from mixer to forms in a continuous manner until the approved unit of operation is completed. Adequate scaffolding, ramps and walkways shall be provided so that personnel and equipment are not supported by in-place reinforcement. Placing will not be permitted when the sun, heat, wind, or limitations of facilities furnished by the Contractor prevent proper consolidation, finishing and curing. Concrete shall be deposited as close as possible to its final position in the forms, and there shall be no vertical drop greater than 2.4 meters except where suitable equipment is provided to prevent segregation and where specifically authorized. Depositing of the concrete shall be so regulated that it will be effectively consolidated in horizontal layers not more than 300 mm thick, except that all slabs shall be placed in a single layer. Concrete to receive other construction shall be screeded to the proper level to avoid excessive shimming or grouting.

3.8.1 Placement of Slabs On Grade

Placement of concrete shall be continuous so that each unit of operation will be monolithic. Concrete shall be consolidated, screeded to grade, and prepared for the specified finish. Jointing shall be as shown on the drawings. If not shown, crack control shall be provided by construction joints at the perimeter of each individual panel, or by longitudinal construction joints and transverse contraction joints if lane placement is used. Lanes shall be one panel wide. Joints not shown shall be located at column centerlines and intermediate intervals so that each panel shall be not more than 37 square meters in area. Panels shall be approximately square with no side longer than 8 meters. Diamond-shaped isolation joints shall be provided for the full slab depth at columns on separate footings, and shall be constructed so that corners of isolation joints will meet crack-control joints. Where columns bear on thickened slabs or thickened edges, contraction or expansion joints shall be offset from these locations. Forms shall remain in place for at least 24 hours after concrete placement.

3.8.2 Contraction Joints

Contraction joints may be constructed by inserting properly designed plastic strips into the plastic concrete, or by cutting the concrete with a saw after it has set. Unless otherwise indicated or directed, the joints shall have a width of 3 mm and a depth of approximately 1/4 the slab thickness or the maximum size of the coarse aggregate, whichever is greater.

3.8.3 Plastic Strips

Plastic strips shall be of the required dimensions and as long as practicable. After the first floating, the concrete shall be grooved with a straight edge. The tool shall be the same length of the joint and be inserted the total depth of the plastic strip at the joint locations. The strip shall be inserted in the groove, and shall maintain true alignment while the strip is depressed until the top edge is flush with the surface of the slab. The slab shall be floated and finished as specified. Working of the concrete adjacent to the joint shall be the minimum necessary to fill voids and consolidate the concrete. The top portion of the filler shall be sawed out after the curing period to form a recess for sealer.

3.8.4 Joint Sawing

Joint Sawing shall be early enough to prevent uncontrolled cracking in the slab, but late enough that this can be accomplished without appreciable spalling. Concrete-sawing machines shall be adequate in number and power, and with sufficient replacement blades to complete the sawing at the required rate. Joints shall be cut to true alignment and shall be cut in sequence of concrete placement. Sludge and cutting debris shall be removed.

3.8.5 Construction and Expansion Joints

Construction and expansion joints shall be finished with an edging tool having 3 mm radius, except where a floor covering will be applied.

3.8.6 Sealing Construction and Expansion Joints

Sealing contraction and expansion joints in slabs shall be filled with Federal Specified TT-S-230 or TT-S-227 joint sealant, except where floor covering is required. Joint surfaces shall be clean, dry, and free of oil or other foreign material. Joint sealant shall be applied to a joint reservoir cut in the concrete which will provide an effective joint sealant width of 12 mm and depth of 12 mm. The reservoir joint depth shall be over cut to allow the installation of backer rod material while maintaining the minimum reservoir dimensions specified above. Joints that receive floor covering shall be filled as recommended by the floor covering manufacturer. All joints shall be completely filled with sealer, which shall be well bonded to the concrete and free from voids.

3.9 CONSOLIDATION

Immediately after placing, each layer of concrete shall be consolidated by internal vibrators, except for slabs 100 mm or less. The vibrators shall at all times be adequate in effectiveness and number to properly consolidate the concrete; a spare vibrator shall be kept at the jobsite during all concrete placing operations. The vibrators shall have a frequency of not less than 8000 vibrations per minute, and the head diameter and amplitude shall be appropriate for the concrete mixture being placed. Vibrators shall be inserted vertically at uniform spacing over the area of placement. The distance between insertions shall be approximately 1-1/2 times the radius of action of the vibrator so that the area being vibrated will overlap the adjacent just-vibrated area by a minimum 25 mm. The vibrator shall penetrate rapidly to the bottom of the layer and at least 150 mm into the preceding layer if there is such. Vibrator shall be held stationary until the concrete is consolidated and then withdrawn slowly. The use of form vibrators must be specifically approved. Vibrators shall not be used to transport concrete within the forms. Slabs 100 mm and less in thickness shall be consolidated by properly designed vibrating screeds or other approved technique.

3.10 WEATHER LIMITATIONS

Special protection measures, approved by the Contracting Officer, shall be used if freezing temperatures are anticipated before the expiration of the specified curing period. The temperature of the concrete placed

during warm weather shall not exceed 30 degrees C except where an approved retarder is used. The mixing water and/or aggregates shall be cooled, if necessary, to maintain a satisfactory placing temperature. In no case shall the placing temperature of the concrete exceed 35 degrees C .

3.11 CONSTRUCTION JOINTS

Construction joints shall be located as indicated or approved. Where concrete work is interrupted by weather, end of work shift or other similar type of delay, location and type of construction joint shall be subject to approval of the Contracting Officer.

3.12 FINISHING CONCRETE

3.12.2 Unformed Surfaces

3.12.2.4 Broom Finish

After floating, slabs for the dumpster pad areas shall be lightly trowelled, and then broomed with a fiber-bristle brush in a direction transverse to that of the main traffic.

3.13 CURING AND PROTECTION

3.13.1 General

Immediately after placement, concrete shall be protected from premature drying extremes in temperatures, rapid temperature change, mechanical injury and injury from rain and flowing water. Air and forms in contact with concrete shall be maintained at a temperature above 10 degrees C for the first 3 days and at a temperature above 0 degrees C for the remainder of the specified curing period.

3.13.2 Moist Curing

Concrete to be moist-cured shall be maintained continuously wet for the entire curing period. If water or curing materials used stains or discolors concrete surfaces which are to be permanently exposed, the concrete surfaces shall be cleaned. When wooden forms are left in place during curing, they shall be kept wet at all times. If the forms are removed before the end of the curing period, curing shall be carried out as on unformed surfaces, using suitable materials. Horizontal surfaces shall be cured by ponding, by covering with a 50 mm minimum thickness of continuously saturated sand, or by covering with waterproof paper, polyethylene sheet, polyethylene-coated burlap or saturated burlap.

3.13.3 Membrane Curing

Membrane curing shall not be used on surfaces that are to receive any subsequent treatment depending on adhesion or bonding to the concrete; except a styrene acrylate or chlorinated rubber compound meeting ASTM C 309, Class B requirements may be used for surfaces which are to be painted or are to receive bituminous roofing or waterproofing, or floors that are to receive adhesive applications of resilient flooring. The curing compound selected shall be compatible with any subsequent paint, roofing, waterproofing or flooring specified. Membrane curing compound shall not be used on surfaces that are maintained at curing temperatures with free steam. Curing compound shall be applied to formed surfaces immediately after the forms are removed and prior to any patching or other surface treatment except the cleaning of loose sand, mortar, and debris from the surface. Surfaces shall be thoroughly moistened with water and the curing compound shall be applied to slab surfaces as soon as the bleeding water has disappeared, with the tops of joints being temporarily sealed to prevent entry of the compound and to prevent moisture loss during the

curing period. Compound shall be applied in a one-coat continuous operation by mechanical spraying equipment, at a uniform coverage in accordance with the manufacturer's printed instructions. Concrete surfaces which have been subjected to rainfall within 3 hours after curing compound has been applied shall be resprayed by the method and at the coverage specified. On surfaces permanently exposed to view, the surface shall be shaded from direct rays of the sun for the duration of the curing period. Surfaces coated with curing compound shall be kept free of foot and vehicular traffic, and from other sources of abrasion and contamination during the curing period.

END OF SECTION

This page intentionally blank

SECTION 03413

PRECAST ARCHITECTURAL CONCRETE

PART 1 GENERAL

1.1 REFERENCES

The publications listed below form a part of this specification to the extent referenced. The publications are referred to in the text by basic designation only.

ACI INTERNATIONAL (ACI)

ACI 211.1	(1991) Standard Practice for Selecting Proportions for Normal, Heavyweight, and Mass Concrete
ACI 211.2	(1991) Standard Practice for Selecting Proportions for Structural Lightweight Concrete
ACI 315 (1994)	ACI Detailing Manual: Section Details and Detailing of Concrete Reinforcement
ACI 318/318R	(1995) Building Code Requirements for Structural Concrete and Commentary
ACI 318M	(1995) Metric Building Code Requirements for Structural Concrete and Commentary

AMERICAN SOCIETY FOR TESTING AND MATERIALS (ASTM)

ASTM A 416/416 M	(1996) Steel Strand, Uncoated Seven-Wire for Prestressed Concrete
ASTM C 494	(1992) Chemical Admixtures for Concrete
ASTM C 1017	(1992) Chemical Admixtures for Use in Producing Flowing Concrete

AMERICAN WELDING SOCIETY (AWS)

AWS D1.1	(1996) Structured Welding Code - Steel

PRECAST/PRESTRESSED CONCRETE INSTITUTE (PCI)

PCI Mnl-116S	(1985) Manual for Quality Control for Plants and Production of Precast and Prestressed Concrete Products
PCI Mnl-117	(1996) Manual for Quality Control for Plants and Production of Architectural Precast Concrete Products
PCI Mnl-122	(1989) Architectural Precast Concrete

1.2 GENERAL REQUIREMENTS

Precast concrete units shall be designed and fabricated by an experienced and acceptable precast concrete manufacturer certified under the PCI Plant Certification Program. The manufacturer shall have been regularly and continuously engaged in the manufacture of precast concrete work similar to that indicated on the drawings for at least 3 years. Precast work shall be coordinated with the work of other trades.

1.3 DESIGN

1.3.1 Standards and Loads

Precast unit design shall conform to ACI 318M ACI 318/318R and PCI Mnl-122. Design loads for precast concrete shall be as indicated on the drawings. A differential temperature of 89 degrees C (160 degrees F), between interior and exterior faces of the units, shall be considered in the design. Stresses due to restrained volume change caused by shrinkage and temperature differential, handling, transportation and erection shall be accounted for in the design.

1.3.2 Connections

Connection of units to other members, or to other units shall be of the type and configuration indicated.

1.3.3 Concrete Strength

Precast concrete units shall have a 28-day compressive strength of 34 MPa (5000 psi). Concrete mix shall include 4 to 6 percent entrained air.

1.3.4 Concrete Proportion

Selection of proportions for concrete shall be based on the methodology presented in ACI 211.1 for normal weight concrete and ACI 211.2 for lightweight concrete. The concrete proportion shall be developed using the same type and brand of cement, the same type and gradation of aggregates, and the same type and brand of admixture that will be used in the manufacture of precast concrete units for the project. Calcium chloride shall not be used in precast concrete and admixtures containing chloride ions, nitrates, or other substances that are corrosive shall not be used in prestressed concrete.

1.3.5 Calculations

Calculations for design of members and connections not shown shall be made by a professional engineer experienced in the design of precast architectural concrete. Calculation shall include the analysis of member for lifting stresses and the sizing of the lifting inserts.

1.4 SUBMITTALS

Government approval is required for submittals with a "GA" designation; submittals having an "FIO" designation are for information only. The following shall be submitted in accordance with SECTION: 01330 SUBMITTAL PROCEDURES:

SD-01 Data

Calculations; FIO.

Design calculations, prior to the manufacture of any precast architectural concrete units for the project.

Mix Design; FIO.

A statement giving the maximum nominal coarse aggregate size, the proportions of all ingredients and the type and amount of any admixtures that will be used in the manufacture of each strength and type of concrete, prior to commencing operations. The statement shall be accompanied by test results from an approved testing laboratory, certifying that the proportions selected will produce concrete of the properties required. No substitutions shall be made without additional tests to verify that the concrete properties are satisfactory.

SD-04 Drawings

Architectural Concrete System; GA.

Detail drawings showing details in accordance with ACI 315 and ACI 318M ACI 318/318R, including installation details. Detail drawings shall indicate separate identification marks for each different precast unit, location of units in the work, elevations, fabrication details, welding details, reinforcement, connections, dimensions, interface with adjacent members, blocking points for units stored at the precast concrete plant or at the jobsite, lifting points and special handling instructions in sufficient detail to cover manufacture, handling, and erection.

SD-09 Reports

Materials; FIO.

Certified copies of test reports including all test data and all test results. Tests for compressive strength of concrete shall be performed by an approved independent commercial testing laboratory, except that compressive strength tests for initial prestress may be performed in the manufacturer's plant laboratory.

SD-14 Samples

Precast Concrete Units; GA.

Two 300 by 300 by 50 mm samples of each type of precast unit finish required for the project. Samples shall show matrix color, surface color, surface texture, and panel back finish. A full-size mock-up, maintained at the precast concrete manufacturer's plant until approval by the Contracting Officer for removal or incorporating in the project. The mock-up shall be used to establish quality and acceptance of precast units to be used on the project, and shall consist of three or more units, showing the exterior finish (matrix color, surface color, surface texture), panel back finish, edge treatment, joint treatment, reinforcement, anchorage insert, lifting inserts, and other accessories. Mockup shall also include doors and windows and typical joints, including exterior corner joints and joints between units.

SD-18 Records

Manufacturer's Qualifications; FIO.

A statement giving the qualifications of the precast concrete manufacturer and of the installers, prior to commencing operations.

1.5 STORAGE AND INSPECTION AT MANUFACTURER'S PLANT

Precast units temporarily stored at the manufacturer's plant shall be protected from damage in accordance with PCI Mnl-117 and PCI Mnl-122. Immediately prior to shipment to the jobsite, all precast concrete units shall be inspected for quality to insure all precast units conform to the requirements specified. Inspection for quality shall include, but shall not necessarily be limited to, the following elements: color, texture, dimensional tolerances, chipping, cracking, staining, warping and honeycombing. All defective precast concrete units shall be replaced or repaired as approved.

1.6 HANDLING AND STORAGE

Precast units shall be delivered to the site in accordance with delivery schedule to avoid excessive build-up of units in storage at the site. Upon delivery to the jobsite all precast units shall be inspected for quality as specified in paragraph STORAGE AND INSPECTION AT MANUFACTURER’S PLANT. If the precast units cannot be unloaded and placed directly into the work, they shall be stored onsite, off the ground and protected from weather, marring, or overload. Precast units shall be handled in accordance with manufacturer's instructions.

PART 2 PRODUCTS

2.1 MATERIALS

Except as otherwise specified, material shall conform to SECTION: 03300 CAST-IN-PLACE STRUCTURAL CONCRETE and SECTION: 03200 CONCRETE REINFORCEMENT.

2.1.1 Aggregates

Aggregates shall be 6 mm minus and silica sand.

2.1.2 Reinforcing Steel

Reinforcing steel shall be galvanized if clearance to an exterior face is 25 mm or less.

2.1.3 Prestressing Strands

Prestressing strands shall conform to ASTM A 416/A 416M.

2.1.4 Tie Wire

Tie wire shall be soft monel or 18-8 stainless steel.

2.1.5 Inserts

Inserts shall be manufacturer's standard, suited for the application.

2.1.6 Plates, Angles, Anchors and Embedments

Material shall be as specified in PCI Mnl-117. Steel items, other than stainless, shall be coated with a rust-inhibiting paint or shall be hot-dip galvanized. Steel items, including items embedded in concrete, shall be either stainless steel or hot dip galvanized steel.

2.1.7 Form Release Agent

Release agent shall be manufacturer's standard nonstaining type.

2.1.8 Admixtures

Admixtures shall conform to ASTM C 494. Plasticizing admixture, if used, shall conform to ASTM C 1017.

2.1.9 Color

Color shall be in accordance with the color schedule as indicated on the plans.

2.2 PRECAST CONCRETE UNITS

Precast concrete units shall be manufactured and cured in accordance with the applicable provisions of PCI Mnl-117. Units shall be manufactured within the allowable tolerances given in PCI Mnl-117 and PCI Mnl-122.

2.2.1 Formwork

Forms shall be steel of adequate thickness, braced, stiffened, anchored and aligned to produce precast architectural concrete units within required dimensional tolerances. Forms shall be sufficiently rigid to provide dimensional stability during handling and concrete placement and consolidation. Fiberglass-reinforced plastic, plastic coated wood, elastomeric or other nonabsorptive material shall be used for making tight joints and rustication pieces.

2.2.2 Reinforcement

Fabrication and placement of reinforcement shall conform to the details shown on the approved detail drawings and PCI Mnl-116S and PCI Mnl-117.

2.2.3 Embedded Accessories

Anchors, inserts, lifting devices, and other accessories which are to be embedded in the precast units shall be furnished and installed in accordance with the approved detail drawings. Embedded items shall be accurately positioned in their designed location, and shall have sufficient anchorage and embedment to satisfy design requirements.

2.2.4 Stripping

Precast concrete units shall not be removed from forms until units develop sufficient strength to safely strip the formwork and to remove the precast concrete units from the forms to prevent damage to the units from overstress or chipping.

2.2.5 Identification

Each precast concrete unit shall be marked to correspond to the identification marks for each different precast unit shown on the detail drawings.

2.2.6 Finishes

2.2.6.1 Exposed Surfaces

Surfaces of precast units exposed to view or surfaces indicated to be finished shall be finished as follows: Utilize three-step finishing process: acid etch surface, sack rub in all exposed voids with grout matching to approved concrete color, then re-etch the surface to yield a fine texture with no voids or coarse aggregate exposed.

2.2.6.2 Other Surfaces

Surfaces of precast units not exposed to view or not otherwise indicated to be finished shall be finished in accordance with SECTION: 03300 CAST-IN-PLACE STRUCTURAL CONCRETE.

PART 3 EXECUTION

3.1 ERECTION

Precast units shall be erected in accordance with the detail drawings and without damage to other units or to adjacent members. Coordinate installation/erection with SECTION: 04220, NONBEARING MASONRY VENEER/STEEL STUD WALLS. Units shall be set true to alignment and level, with joints properly spaced and aligned both vertically and horizontally. Erection tolerances shall be in accordance with the requirements of PCI Mnl-117 and PCI Mnl-122. As units are being erected, shims and wedges shall be placed as required to maintain correct alignment. After final attachment, precast units shall be grouted as shown. After erection, welds and abraded surfaces of steel shall be cleaned and touched-up with a zinc-rich paint. Welds shall be made by a certified welder in accordance with the manufacturer's erection drawings. Pickup points, boxouts, inserts, and similar items shall be finished to match adjacent areas after erection. Erection of precast units shall be supervised and performed by workmen skilled in this type of work. Welding and the qualifications of welders shall be in accordance with AWS D1.1.

3.2 JOINT SEALING

Joint sealing shall be as specified in Section 07900 JOINT SEALING.

3.3 CLEANING

Not sooner than 72 hours after joints are sealed, faces and other exposed surfaces of precast concrete discolored during erection shall be cleaned to remove dirt and stains by dry scrubbing with a stiff fiber brush, wetting the surface and vigorous scrubbing of the finish with a stiff fiber brush followed by additional washing, or by chemical cleaning compounds such as detergents or other commercial cleaners. Commercial cleaners shall be used in accordance with the manufacturer's recommendations. Cleaning procedure shall be performed on a designated test area and shall be approved prior to proceeding with cleaning work. Discolorations which cannot be removed by these procedures, will be considered defective work. Cleaning work shall be done when temperature and humidity permit surfaces to dry rapidly. Adjacent surfaces shall not be damaged during cleaning operations. Reference cleaning proceedures under SECTION: 04220, NONBEARING MASONRY VENEER /STEEL STUD WALLS.

3.4 PROTECTION OF WORK

Precast units shall be protected against damage from subsequent operations.

3.5 DEFECTIVE WORK

Precast concrete units damaged during erection shall be repaired as soon after occurrence as possible or replaced, as directed, using approved procedures. All repairs to precast concrete units shall match the adjacent surfaces in color and texture and shall be as approved. Unless otherwise approved, repair procedures shall conform to PCI Mnl-117.

END OF SECTION

SECTION 04220

NONBEARING MASONRY VENEER/STEEL STUD WALLS

PART 1 GENERAL

1.1 REFERENCES

The publications listed below form a part of this specification to the extent referenced. The publications are referred to in the text by the basic designation only.

AMERICAN INSTITUTE OF STEEL CONSTRUCTION (AISC)

AISC ASD Manual	(1989) Manual of Steel Construction Allowable Stress Design

AMERICAN IRON AND STEEL INSTITUTE (AISI)

AISI-01	(1996) Cold-Formed Steel Design Manual

AMERICAN SOCIETY FOR TESTING AND MATERIALS (ASTM)

ASTM A 36/A 36M	(1997a) Carbon Structural Steel
ASTM A 82	(1997) Steel Wire, Plain, for Concrete Reinforcement
ASTM A 123/A 123M	(1997a) Zinc (Hot-Dip Galvanized) Coatings on Iron and Steel Products
ASTM A 153/A 153M	(1995) Zinc Coating (Hot-Dip) on Iron and Steel Hardware
ASTM A 653/A 653M	(1997) Steel Sheet, Zinc-Coated (Galvanized) or Zinc-Iron Alloy-Coated (Galvannealed) by the Hot-Dip Process
ASTM C 67	(1996) Sampling and Testing Brick and Structural Clay Tile
ASTM C 79/C 79M	(1997) Treated Core and Nontreated Core Gypsum Sheathing Board
ASTM C 90	(1997) Load-Bearing Concrete Masonry Units
ASTM C 91	(1997) Masonry Cement
ASTM C 216	(1997) Facing Brick (Solid Masonry Units Made from Clay or Shale)
ASTM C 270	(1997a) Mortar for Unit Masonry

ASTM C 494	(1992) Chemical Admixtures for Concrete
ASTM C 578	(1995) Rigid, Cellular Polystyrene Thermal Insulation
ASTM C 591	(1994) Unfaced Preformed Rigid Cellular Polyisocyanurate Thermal Insulation
ASTM C 665	(1995) Mineral-Fiber Blanket Thermal Insulation for Light Frame Construction and Manufactured Housing
ASTM C 744	(1997) Prefaced Concrete and Calcium Silicate Masonry Units
ASTM C 780	(1996) Preconstruction and Construction Evaluation of Mortars for Plain and Reinforced Unit Masonry
ASTM C 954	(1996a) Steel Drill Screws for the Application of Gypsum Panel Products or Metal Plaster Bases to Steel Studs from 0.033 in. (0.84 mm) to 0.112 in. (2.84 mm) in Thickness
ASTM C 955	(1996a) Load-Bearing (Transverse and Axial) Steel Studs, Runners (Tracks), and Bracing or Bridging for Screw Application of Gypsum Panel Products and Metal Plaster Bases
ASTM C 1002	(1996a) Steel Drill Screws for the Application of Gypsum Panel Products or Metal Plaster Bases
ASTM C 1072	(1997) Measurement of Masonry Flexural Bond Strength
ASTM D 226	(1997) Asphalt-Saturated Organic Felt Used in Roofing and Waterproofing
ASTM D 1056	(1991) Flexible Cellular Materials - Sponge or Expanded Rubber
ASTM D 1330	(1985; R 1995) Rubber Sheet Gaskets
ASTM D 1667	(1997) Flexible Cellular Materials - Vinyl Chlorine Polymers and Copolymers (Closed-Cell Foam)
ASTM D 2103	(1997) Polyethylene Film and Sheeting

AMERICAN SOCIETY OF HEATING, REFRIGERATING AND AIR-CONDITIONING (ASHRAE)

ASHRAE Fundament Hdbk-IP	(1993) Handbook, Fundamentals I-P Edition

AMERICAN WELDING SOCIETY (AWS)

AWS D1.3	(1989) Structural Welding Code - Sheet Steel

DEPARTMENT OF COMMERCE (DOC)

DOC PS 1	(1996) Voluntary Product Standard - Construction and Industrial Plywood

1.2 SUBMITTALS

Government approval is required for submittals with a "GA" designation; submittals having an "FIO" designation are for information only. The following shall be submitted in accordance with Section 01330 SUBMITTAL PROCEDURES:

SD-01 Data

Masonry Veneer/Steel Stud Wall System; GA.

Calculations demonstrating the structural adequacy of steel lintels and shelf angles for the calculated gravity loads being supported; this analysis shall be in accordance with AISC ASD Manual. Test results demonstrating that the veneer anchors are structurally adequate to resist the specified loadings shall be submitted for approval. Calculations demonstrating the insulation shown on the drawings provides the specified U-value for heat transmission of the completed exterior wall construction; this analysis shall be in accordance with ASHRAE Fundament Hdbk-IP. Manufacturer's descriptive data and installation instructions for the insulation, the vapor barrier and the moisture barrier.

SD-04 Drawings

Masonry Veneer/Steel Stud Wall System; GA.

Details of cold-formed steel framing and support around openings, including framing connections, steel lintels, steel shelf angles, attachment to other building elements and bridging. Drawings shall indicate thickness, material, dimensions, protective coatings, and section properties of all steel lintels and shelf angles used in exterior wall framing. Drawings shall also indicate size and type of all fasteners including size and type of all welds. If the Contractor opts to furnish inch-pound (IP) CMU products, drawings showing elevation of walls exposed to view and indicating the location of all cut CMU products shall be submitted for approval.

SD-13 Certificates

Concrete Masonry Units; FIO. Joint Reinforcement; FIO. Expansion Joint Materials; FIO. Insulation; FIO. Gypsum Sheathing; FIO. Moisture Barrier; FIO. Vapor Barrier; FIO. Veneer Anchors; FIO. Welders Qualification; FIO.

Certificates stating that the materials and welders meet the requirements specified. Each certificate shall be signed by an authorized certification official and shall include their organization and position and shall identify the products covered under their certifying signature.

SD-14 Samples

Expansion Joint Materials; FIO. Concrete Masonry Units; FIO. Sample Panel; FIO.

A portable panel, approximately 600 by 600 mm, containing approximately 24 concrete masonry units to establish the range of color and texture. One of each type of masonry veneer anchor used.

1.3 SAMPLE PANEL

After the material samples are approved and prior to starting masonry work, a sample masonry panel shall be built on the project site where directed. The sample panel shall be not less than 1.8 m long by 1.2 m high. The panel shall be of typical wall thickness for the construction represented. The panel shall show color range, texture, bond pattern, expansion joints, and cleaning of the masonry as required in the work. The panel shall also show cold-formed steel framing, insulation, gypsum wallboard, gypsum sheathing, moisture barrier, vapor barrier, veneer anchors, joint reinforcement, steel shelf angles, flashing and weep holes. The approved sample panel shall be used as a standard of workmanship required in the actual installation. The sample panel shall be protected from weather and construction operations and shall not be removed until the masonry veneer/steel stud wall work has been completed and accepted.

1.4 DELIVERY, HANDLING AND STORAGE

Materials shall be delivered and handled avoiding chipping, breakage, bending or other damage, and contact with soil or other contaminating materials. The masonry products shall be stored off the ground and protected from inclement weather. Cementitious materials shall be delivered in unopened containers plainly marked and labeled with manufacturer's names and brands. Cementitious materials shall be stored in dry, weather-tight enclosures or covers. Sand and other aggregates shall be stored preventing contamination or segregation and under a weather-tight covering permitting good air circulation. Finish of the framing members shall be maintained at all times, using an approved high zinc dust content galvanizing repair paint whenever necessary to prevent the formation of rust. Insulation, moisture barrier, and gypsum sheathing shall be stored in dry, well ventilated, weather-tight areas protected from sunlight and excessive heat. Air infiltration type vapor barrier shall be stored in accordance with the manufacturer's recommendations.

1.5 EFFLORESCENCE TESTS

Efflorescence tests shall be performed by an approved commercial testing laboratory. Sampling for the tests shall be the responsibility of the Contractor. Brick shall be sampled and tested for efflorescence in accordance with ASTM C 67 and the rating shall be: "not effloresced".

PART 2 PRODUCTS

2.1 VENEER WYTHE

The source of masonry materials which will affect the appearance of the finished work shall not be changed after the work has started except with the Contracting Officer's approval.

2.1.1 Concrete Masonry Unit

Concrete masonry unit veneer shall be solid and conform to ASTM C 90, Type I. Architectural type, color range and texture shall be as indicated and shall conform to the approved sample. Masonry unit sizes shall be modular, color and texture shall be as shown on drawings. When Antique Linen is specified use 100 percent all white cement to obtain integral color.

2.2 MORTAR

Mortar shall conform to ASTM C 270, Type S . Mortar mix shall be based on proportion specifications. Laboratory testing of mortar shall be in accordance with the preconstruction evaluation of mortar section of ASTM C 780. Cement shall have a low alkali content and be of one brand. Aggregates shall be from one source.

2.2.1 Masonry Cement

Masonry cement in conformance with ASTM C 91 may be used in the mortar. When using a masonry cement a comparative test shall be performed between a Portland cement-lime mortar and the masonry cement mortar proposed for the project to evaluate the ASTM C 1072 bond and the ASTM C 780 compressive strength of the two mixes. The test shall be conducted with the proposed masonry units for the project. The masonry cement mortar will be acceptable if the bond and compressive strength values are equal to or higher than the portland cement-lime mix. The air-content of the masonry cement shall be limited to 12 percent maximum.

2.2.2 Admixtures

In cold weather, a non-chloride based accelerating admixture may be used subject to approval. Accelerating admixtures shall be non-corrosive, contain less than 0.2 percent chlorides, and conform to ASTM C 494, Type C.

2.3 JOINT REINFORCEMENT

Joint reinforcement shall be of steel wire conforming to ASTM A 82. Fabrication shall be by welding. Tack welding will not be permitted. Reinforcement shall be zinc-coated after fabrication in accordance with ASTM A 153/A 153M, Class B-2. Joint reinforcement shall consist of at least 1 continuous longitudinal wire in the veneer wythe. Minimum wire cross section shall be 11 square mm.

2.4 COLD-FORMED STEEL FRAMING

Cold-formed framing shall consist of steel studs, top and bottom tracks, runners, horizontal bridging, and other cold-formed members and other accessories. All members and components made of sheet steel shall be hot-dip galvanized in accordance with ASTM A 653/A 653M with a minimum coating thickness of G 60. Framing covered herein shall be used only in framing the exterior masonry veneer steel stud wall system as indicated on the drawings. Metal framing for interior partitions are specified in Section 09250 GYPSUM WALLBOARD.

2.4.1 Steel Studs

The minimum depth of the steel stud will be 150 mm, the minimum flange width will be 41 mm on the flange of 6 mm. Studs shall be furnished as shown in the contract drawings.

2.4.2 Runners, Tracks, Bridging and Accessories

Cold-formed steel sheet framing members, components, and accessories, other than the steel studs, shall conform to ASTM C 955 and be of steel conforming to ASTM A 653/A 653M, Grade 33, having a minimum yield strength of 230 MPa.

2.5 INSULATION

2.5.1 Blanket Insulation

Insulation placed between the steel studs shall be batt or blanket type mineral wool conforming to ASTM C 665, Type II.

2.5.2 Rigid Board-Type Insulation

Insulation for wall cavities shall be rigid board-type insulation. Rigid board-type insulation shall be either polystyrene conforming to ASTM C 578, Type I or II, Grade 2 or polyurethane conforming to ASTM C 591.

2.6 GYPSUM WALLBOARD

Gypsum wallboard that is installed on the interior side of the cold-formed steel framing system shall be as specified in Section 09250 GYPSUM WALLBOARD.

2.7 EXTERIOR SHEATHING

Gypsum sheathing that is installed on the exterior side of the cold-formed steel framing system shall have a minimum thickness of 13 mm and shall be 1.2 m wide. Gypsum sheathing shall conform to ASTM C 79/C 79M. Gypsum sheathing shall have a water-resistant gypsum core with a water-repellent paper firmly bonded to the core.

2.8 MOISTURE PROTECTION

2.8.1 Moisture Barrier

The moisture barrier shall be 6.7 kg asphalt-saturated felt conforming to ASTM D 226 Type I (No. 15).

2.8.2 Vapor Retarder

The vapor retarder shall be polyethylene film conforming to ASTM D 2103, .2 mm minimum thickness.

2.8.3 Staples

Staples for attaching the moisture barrier to the exterior sheathing shall be the type and size best suited to provide a secure connection. Staples shall be made from either galvanized steel or stainless steel wire.

2.8.4 Joint Tape

Tape for sealing the joints in the vapor retarder shall be laminated tape with pressure sensitive adhesive as recommended by the manufacturer of the polyethylene film.

2.9 VENEER ANCHORS

Anchor assemblies for the attachment of the masonry veneer to the cold-formed steel framing, structural steel and/or concrete beam and column members, and concrete floor slabs shall be designed for the design loadings shown. Anchors shall transfer the design loadings from the masonry veneer to the cold-formed steel framing system or other support without exceeding the allowable stresses and deflections in the anchors. Length of anchor wires shall be such that the outermost wires lie between 32 mm from each face of the masonry veneer. Anchors wires shall not have drips. Wires for veneer anchors shall be rectangular or triangular hoops formed from 5 mm diameter steel wire conforming to ASTM A 82. Anchor assemblies including wires and anchor plates shall be hot-dip galvanized conforming to ASTM A 153/A 153M, Class B-2. The veneer anchor shall have a minimum capacity of 900 newtons. The load-displacement capacity of each veneer anchor, both in direct pull-out for tension and compression, shall be not less than 350 kilo newtons per meter or a deflection of 2.85 mm per kilo newton of load in tension or compression). In the direction perpendicular to the masonry veneer, the anchor assembly shall have a maximum play of 1.6 mm.

2.9.1 Adjustable Pintle-Eye Type Wire Anchors

Adjustable pintle-eye type wall anchors shall be two pieces rectangular type double pintle anchors.

2.9.2 Dovetail Anchors

Dovetail slots are specified in Section 03300 CAST-IN-PLACE STRUCTURAL CONCRETE.

2.10 CONNECTIONS

Screws, bolts and anchors shall be hot-dip galvanized in accordance with ASTM A 123/A 123M or ASTM A 153/A 153M as appropriate.

2.10.1 Framing Screws, Bolts and Anchors

Screws, bolts and anchors used in the assembly of the cold-formed steel framing system shall be [as shown.] [as required by design of the framing system for the specified loading.] Screw, bolt and anchor sizes shall be shown on the detail drawings.

2.10.2 Welding

Welded connections shall be designed and all welding shall be performed in accordance with AWS D1.3, as modified by AISI-01. Welders shall be qualified in accordance with AWS D1.3. All welds shall be cleaned and touched-up with zinc-rich paint.

2.10.3 Veneer Anchor Screws

Screws for attachment of the veneer anchors to the cold-formed steel framing members shall be as required by design to provide the needed pullout load capacity but not less than No. 12. Screws shall be shown on the detail drawings. The length of screws shall be such that the screws penetrate the holding member by not less than 16 mm.

2.10.4 Gypsum Sheathing Screws

Screws for attachment of gypsum sheathing to cold-formed steel framing shall conform to ASTM C 954.

2.11 SYNTHETIC RUBBER WASHERS

Synthetic rubber washers for placement between veneer anchors and the moisture barrier on the outside face of the exterior sheathing shall conform to ASTM D 1330, Grade I.

2.12 EXPANSION JOINT MATERIAL

Expansion joint materials shall be bellows or U-shaped type conforming to Section 07600 SHEET METALWORK, GENERAL. Premolded type shall be closed-cell cellular rubber conforming to ASTM D 1056 or closed-cell vinyl or polyvinyl chloride conforming to ASTM D 1667.

2.13 FLASHING

Copper or stainless steel flashing shall conform to the requirements in Section 07600 SHEET METALWORK, GENERAL. Flashing shall be supplied in a continuous sheet extending from the exterior sheathing across the cavity and through the masonry veneer as shown.

2.14 STEEL LINTELS AND SHELF ANGLES

Steel shapes used for lintels and shelf angles shall conform to ASTM A 36/A 36M. Lintels and shelf angles shall be provided as shown. These steel members shall be hot-dip galvanized in accordance with ASTM A 123/A 123M.

2.15 CAULKING AND SEALANTS

Caulking and sealants shall be as specified in Section 07900 JOINT SEALING.

2.16 PRECAST CONCRETE ITEMS

Window headers and sills shall be factory-made units from a plant regularly engaged in producing precast concrete units. Unless otherwise indicated, concrete shall be 28 Mpa minimum conforming to Section 03300 CAST-IN-PLACE STRUCTURAL CONCRETE using 13 mm to No. 4 nominal size

coarse aggregate, and minimum reinforcement shall be the reinforcement required for handling of the units. Clearance of 20 mm shall be maintained between reinforcement and faces of units. Unless precast-concrete items have been subjected during manufacture to saturated-steam pressure o9f at least 827 kPa for at least 5 hours, the items, after casting, shall be either damp-cured for 24 hours or steam-cured and shall then be aged under cover for 28 days or longer.

Cast-concrete members weighing over 35 kg shall have built-in loops of galvanized wire or other approved provisions for lifting and anchoring. Units shall have beds and joints at right angles to the face, with sharp true arises and shall be cast with drip grooves on the underside where units overhang walls. Exposed-to-view surfaces shall be free of surface voids, spalls, cracks, and chipped or broken edges. Precast units exposed-to-view shall be of uniform appearance and color. Unless otherwise specified, units shall have a smooth dense finish. Prior to use, each item shall be wetted and inspected for crazing, or having surfaces treated with a protective coating will be rejected.

2.16.1 Headers

Precast headers, unless otherwise shown, shall be of a thickness equal to the wall and reinforced with two No. 4 bars for the full length. Top of lintels shall be labeled "TOP" or otherwise identified and each lintel shall be clearly marked to show location in the structure.

2.16.2 Sills

Sills shall be cast with washes. Sills for windows having mullions shall be cast in sections with head joints at mullions and a 6 mm allowance for mortar joints. The ends of sills, except a 20 mm wide margin at exposed surfaces, shall be roughened for bond.

PART 3 EXECUTION

3.1 GENERAL INSTALLATION REQUIREMENTS

Wall sections, types of construction and dimensions shall be as shown. Metal door and window frames and other special framing shall be built and anchored into the wall system as indicated.

3.2 STEEL STUD WALL FRAMING

The top track of the stud wall system shall be slip jointed to accommodate vertical deflections of the supporting members as shown on the drawings. Top and bottom tracks shall be anchored by one anchor at each stud location as shown on the drawings. Both flanges of all steel studs shall be securely fastened with screws to the flanges of the top and bottom tracks as shown on the drawings. All details for affixing steel studs to runners and all other sheet steel framing members along with all details necessary for anchorage of the steel stud wall system to the building structural systems shall be as shown on the drawings. Horizontal bridging shall be provided as necessary. Studs shall be spaced 400 mm on center. Coordinate stud spacing with sheathing and anchor requirements. At wall openings for doors, windows and other similar features, the framing system shall provide for the installation and anchorage of the required subframes or finish frames. Steel frames shall be securely attached through built-in anchors to the nearest stud on each side of the opening with self-drilling screws. Double studs shall be provided at both jambs of all door openings. Door frames and other built-in items shall be grouted solid.

3.3 STEEL SHELF ANGLES

Unless otherwise shown, steel shelf angles shall be provided in segments that do not exceed 3.0 m in length. At building corners, shelf angle segments shall be mitered and securely attached together by welding with legs no less than 1.2 m where possible. Shelf angle segments shall not be connected together but instead shall be installed with 6 mm wide gaps between the segments. Fabrication and erection tolerances shall be in accordance with the AISC Code of Standard Practice, as indicated in AISC ASD Manual.

3.4 INSULATION

The actual installed thickness of insulation shall provide a minimum thermal resistance of 3.35 m^2 K/W for the completed exterior wall construction as determined in accordance with ASHRAE Fundament Hdbk-IP. Insulation thickness shall be as shown on the approved drawings. Installation, except as otherwise specified or shown, shall be in accordance with the manufacturer's instructions which shall be approved by the Contracting Officer. Insulation shall be installed between wall framing members. Rigid insulation shall be installed in accordance with the manufacturer's instructions with proper connections through the insulation to prevent the insulation from carrying loads directly. Insulation with facings shall be secured to the sides of the framing members to provide a continuous seal so that the entire weight of the insulation is carried by the framing members. Where electrical outlets, ducts, pipes, vents or other utility items occur, insulation shall be placed on the dry side of the item away from excessive humidity.

3.5 GYPSUM WALLBOARD

Gypsum wallboard shall be installed on the interior face of the cold-formed steel framing system. Installation shall be as specified in Section 09250 GYPSUM WALLBOARD except at vertical slip joints, the gypsum wallboard shall be connected to the vertical studs to prevent movement at the slip joint.

3.6 EXTERIOR SHEATHING

Sheathing shall be installed on the exterior face of the cold-formed steel framing system with self-drilling screws. Screws shall be located a minimum of 10 mm from the ends and edges of sheathing panels and shall be spaced not more than 200 mm on each supporting member except at vertical slip joints, the sheathing shall be connected to the vertical studs to prevent movement of the slip joint. Edges and ends of gypsum sheathing panels shall be butted snugly with vertical joints staggered to provide full and even support for the moisture barrier. Holes and gaps resulting from abandoned screw installations, from damage to panels, and from cutting and fitting of panels at junctures with doors, windows, foundation walls, floor slabs and other similar locations shall be filled with exterior rubber-base caulk.

3.7 MOISTURE PROTECTION

3.7.1 Moisture Barrier

The asphalt-saturated felt or other approved moisture barrier shall be installed on the outer face of the exterior sheathing. The moisture barrier shall be installed horizontally and shingled with each sheet

lapped not less than 150 mm over the sheet below. Vertical end joints shall be lapped not less than 150 mm and shall be staggered. Attachment of the moisture barrier shall be with staples spaced not greater than 400 mm on center or as required by the manufacturer.

3.7.2 Vapor Retarder

A vapor retarder shall be installed between the steel studs and the exterior sheathing. The vapor retarder shall be installed in accordance with the manufacturer's recommendations to form a complete retarder to vapor infiltration. The joints shall be lapped and sealed with tape.

3.8 VENEER ANCHORS

Veneer anchors shall be attached with screws through the sheathing and rigid insulation to the steel studs or other support members at the locations shown. When rigid insulation is used, the method of connecting the veneer anchor through the insulation shall be approved by the Contracting Officer. Veneer anchors shall be installed with the outermost wires lying between 16 mm from each face of the masonry veneer. Synthetic rubber washers shall be used between the anchor connector plates and the moisture barrier. A clutch torque slip screw gun shall be used on screws attaching veneer anchors to cold-formed steel members. Veneer anchors with corrugated sheet metal or wire mesh members extending across the wall cavity shall not be used. There shall be one veneer anchor for each 0.2 square meters of wall and shall be attached to steel studs and other supports with a maximum spacing of 600 mm on center. For pintle-eye anchors the vertical distance between the pintle section horizontal wires and the eye section horizontal wires shall not exceed 13 mm. Dovetail slots shall be installed as specified in the Section 03300 CAST-IN-PLACE STRUCTURAL CONCRETE.

3.9 FLASHING

Continuous flashing shall be provided at the bottom of the wall cavity just above grade. Flashing shall also be provided above and below openings at lintels and sills, at shelf angles, and as indicated on the drawings. Flashing shall be as detailed and as specified in Section 07600 SHEET METALWORK, GENERAL. Flashing shall be lapped a minimum of 150 mm at joints and shall be sealed with a mastic as recommended by the flashing manufacturer. Ends over doors, windows and openings shall be turned up and secured. Flashing shall be lapped under the moisture barrier a minimum of 150 mm and securely attached to the gypsum sheathing. Flashing shall extend through the exterior face of the masonry veneer and shall be turned down to form a drip.

3.10 MASONRY VENEER

Exterior masonry wythes shall be constructed to the thickness indicated on the drawings. A cavity consisting of a 50 mm minimum width air space will be provided between the moisture barrier and the masonry veneer. Masonry veneer shall not be installed until the exterior sheathing, moisture barrier, veneer anchors and flashing have been installed on the cold-formed steel framing system. Extreme care shall be taken to avoid damage to the moisture barrier and flashing during construction of the masonry veneer. Any portion of the moisture barrier and flashing that is damaged shall be repaired or replaced prior to completion of the veneer. Masonry shall be placed in running bond pattern. Longitudinal reinforcement consisting of at least one continuous galvanized steel wire shall be placed in the veneer wythe. The minimum wire size shall be 9 gauge. Vertical joints on alternating courses shall be aligned and kept vertically plumb. Solid masonry units shall be laid in a non-furrowed full bed of

mortar, beveled and sloped toward the center of the wythe on which the mortar is placed. Units shall be shoved into place so that the vertical mortar joints are completely full and tight. Units that have been disturbed after the mortar has stiffened shall be removed, cleaned and relaid. Mortar which protrudes more than 13 mm into the cavity space shall be removed. Means shall be provided to ensure that the cavity space is kept clean of mortar droppings and other loose debris. Chases and raked-out joints shall be kept free from mortar and debris. Faces of units used in finished exposed areas shall be free from chipped edges, material texture or color defects or other imperfections distracting from the appearance of the finished work.

3.10.1 Surface Preparation

Surfaces on which masonry is to be laid shall be cleaned of laitance or other foreign material. No units having a film of water shall be laid.

3.10.2 Hot Weather Construction

Temperatures of masonry units and mortar shall not be greater than 50 degrees C when laid. Masonry erected when the ambient air temperature is more than 37 degrees C in the shade and when the relative humidity is less than 50 percent shall be given protection from the direct exposure to wind and sun for 48 hours after the installation.

3.10.3 Cold Weather Construction

Temperatures of masonry units and mortar shall not be less than 4 degrees C when laid. When the ambient air temperature is 0 degrees C or less, masonry veneer under construction shall be protected and maintained at a temperature greater than 0 degrees C for a period of 48 hours after installation. The proposed method of maintaining the temperature within the specified range shall be submitted for approval prior to implementation. No units shall be laid on a surface having a film of frost or water.

3.10.4 Tolerances

Masonry shall be laid plumb, level and true to line within the tolerances specified in TABLE 1. All masonry corners shall be square unless otherwise indicated on the drawings.

TABLE 1	
Variation From Plumb	
In adjacent units	3 mm
In 3 m	6 mm
In 6 m	10 mm
In 12 m or more	13 mm
Variation From Level Or Grades	
In 3 m	3 mm
In 6 m	6 mm

In 12 m or more	13 mm
Variation From Linear Building Lines	
In 6 m	13 mm
In 12 m or more	19 mm
Variation From Cross Sectional Dimensions Of Walls	
Plus	13 mm
Minus	6 mm

3.10.5 Mixing of Mortar

Mortar shall be mixed in a mechanically operated mortar mixer for at least 3 minutes but not more than 5 minutes. Measurement of ingredients for mortar shall be by volume. Measurement of sand shall be accomplished by the use of a container of known capacity or shovel count based on a container of known capacity. Water shall be mixed with the dry ingredients in sufficient amount to provide a workable mixture which will adhere to the vertical surfaces of the masonry units. Mortar that has stiffened because of loss of water through evaporation shall be retempered by adding water to restore the proper consistency and workability. Mortar that has reached its initial set or that has not been used within 2-1/2 hours shall be discarded.

3.10.6 Cutting and Fitting

Wherever possible, full units shall be used in lieu of cut units. Where cut units are required to accommodate the design, cutting shall be done by masonry mechanics using power masonry saws. Wet-cut units shall be dried to the same surface-dry appearances of uncut units before being placed in the work. Cut edges shall be clean, true and sharp. Openings to accommodate pipes, conduits, and other accessories shall be neatly formed so that framing or escutcheons required will completely conceal the cut edges. Insofar as practicable, all cutting and fitting shall be accomplished while masonry work is being erected.

3.10.7 Masonry Units

When being laid, masonry units shall have suction sufficient to hold the mortar and to absorb water from the mortar, but shall be damp enough to allow the mortar to remain in a plastic state to permit the unit to be leveled and plumbed immediately after being laid without destroying bond. Masonry units with frogging shall be laid with the frog side down and better or face side exposed to view. Masonry units that are cored, recessed or otherwise deformed may be used in sills or in other areas except where deformations will be exposed to view.

3.10.8 Mortar Joints

Mortar joint widths shall be uniform and such that the specified widths are maintained throughout. Joints shall be of thickness equal to the difference between the actual and nominal dimensions of the masonry units in either height or length but in no case shall the joints be less than 6 mm nor more than

13 mm wide. Joints shall be tooled slightly concave. Tooling shall be accomplished when mortar is thumbprint hard and in a manner that will compress and seal the mortar joint and produce joints of straight and true lines free of tool marks.

3.10.9 Joint Reinforcement

Unless otherwise shown, joint reinforcement shall be spaced at 400 mm on center vertically. Joint reinforcement shall not be placed in the same masonry course as veneer anchors unless the anchors are designed to accommodate the wire. Joint reinforcement shall be placed so that longitudinal wires are centered in the veneer wythe for solid units. Longitudinal wires shall be fully embedded in mortar for their entire length. Splices in joint reinforcement shall be lapped a minimum of 150 mm. Joint reinforcement must be discontinuous at all veneer joints. The minimum cover for joint reinforcement is 16 mm.

3.10.10 Veneer Joints

Concrete masonry veneer joints shall be provided at the locations shown on the drawings. Details of joints shall be as indicated on the drawings. Joints shall be clean and free of mortar and shall contain only backer rod and sealant, installed in accordance with Section 07900 JOINT SEALING. Horizontal reinforcement shall not extend through the joints.

3.10.11 Weep Holes

Weep holes shall be provided at all flashing locations at intervals of 400 mm. Weep holes shall be placed in head joints just above the flashing. Weep holes shall be formed by leaving head joints open or head joint vents may be used. Weep holes shall be kept free of mortar and other obstructions.

3.10.12 Head Joint Vents

Head joint vents shall be provided near the top of the veneer wythe at the same spacing as the weep holes.

3.10.13 Discontinuous Work

When necessary to temporarily discontinue the work, masonry shall be stepped back for joining when work resumes. Toothing may be used only when specifically approved. Before resuming work, loose mortar shall be removed and the exposed joint shall be thoroughly cleaned. Top of walls subjected to rain or snow shall be covered with nonstaining waterproof covering or membrane when work is not in process. Covering shall extend a minimum of 600 mm down on each side of the wall and shall be held securely in place.

3.10.14 Cleaning

Mortar daubs or splashings shall be completely removed from finished exposed masonry surfaces before they harden or set up. Before completion of the work, defects in mortar joints shall be raked out as necessary, filled with mortar, and tooled to match the adjacent existing mortar in the joints. The proposed cleaning method shall be done on the sample wall panel and the sample panel shall be examined for discoloration or stain. If the sample panel is discolored or stained, the method of cleaning

shall be changed to ensure that the masonry surfaces in the structure will not be adversely affected. Masonry surfaces shall not be cleaned, other than removing excess surface mortar, until mortar in joints has hardened. Cleaning shall be accomplished with the use of stiff bristle fiber brushes, wooden paddles, wooden scrapers, or other suitable nonmetallic tools. Concrete masonry unit surfaces shall be dry-brushed at the end of each day's work after any required pointing has been done. Efflorescence or other stains shall be removed in conformance with the recommendations of the masonry unit manufacturer. After construction and cleaning, masonry surfaces shall be left clean, free of mortar daubs, stain, and discolorations, including scum from cleaning operations, and will have tight mortar joints throughout. Metallic tools and brushes shall not be used for cleaning.

3.11 BUILDING EXPANSION JOINTS

Expansion joints shall be located where indicated and shall be of the size and details shown.

END OF SECTION

This page intentionally blank

SECTION 05055

WELDING, STRUCTURAL

PART 1 GENERAL

1.1 REFERENCES

The publications listed below form a part of this specification to the extent referenced. The publications are referred to in the text by basic designation only.

AMERICAN INSTITUTE OF STEEL CONSTRUCTION (AISC)

AISC-04	(1989) Specification for Structural Steel Buildings - Allowable Stress Design and Plastic Design

AMERICAN SOCIETY FOR NONDESTRUCTIVE TESTING (ASNT)

ASNT-01	(1992; Supple) Recommended Practice SNT-TC-1A

AMERICAN WELDING SOCIETY (AWS)

AWS A2.4	(1993) Standard Symbols for Welding, Brazing and Nondestructive Examination
AWS A3.0	(1994) Standard Welding Terms and Definitions
AWS D1.1	(1994) Structural Welding Code - Steel
AWS Z49.1	(1988) Safety in Welding and Cutting

1.2 DEFINITIONS

Definitions of welding terms shall be in accordance with AWS A3.0.

1.3 GENERAL REQUIREMENTS

The design of welded connections shall conform to AISC-04 unless otherwise indicated or specified. Material with welds will not be accepted unless the welding is specified or indicated on the drawings or otherwise approved. Welding shall be as specified in this section, except where additional requirements are shown on the drawings or are specified in other sections. Welding shall not be started until welding procedures, welders, welding operators, and tackers have been qualified and the submittals approved by the Contracting Officer. Qualification testing shall be performed at or near the work site. Each Contractor performing welding shall maintain records of the test results obtained in welding procedure, welder, welding operator, and tacker performance qualifications.

1.4 SUBMITTALS

Government approval is required for submittals with a "GA" designation; submittals having an "FIO" designation are for information only. The following shall be submitted in accordance with Section 01330 SUBMITTAL PROCEDURES:

SD-08 Statements

Welding Procedure Qualifications; FIO.

Welder, Welding Operator, and Tacker Qualification; FIO.

Inspector Qualification; FIO.

Copies of the welding procedure specifications; the procedure qualification test records; and the welder, welding operator, or tacker qualification test records.

SD-18 Records

Quality Control; GA.

A quality assurance plan and records of tests and inspections.

1.5 WELDING PROCEDURE QUALIFICATIONS

Except for prequalified (per AWS D1.1) and previously qualified procedures, each Contractor performing welding shall record in detail and shall qualify the welding procedure specification for any welding procedure followed in the fabrication of weldments. Qualification of welding procedures shall conform to AWS D1.1 and to the specifications in this section. Copies of the welding procedure specification and the results of the procedure qualification test for each type of welding which requires procedure qualification shall be submitted for approval. Approval of any procedure, however, will not relieve the Contractor of the sole responsibility for producing a finished structure meeting all the requirements of these specifications. This information shall be submitted on the forms in Appendix E of AWS D1.1. Welding procedure specifications shall be individually identified and shall be referenced on the detail drawings and erection drawings, or shall be suitably keyed to the contract drawings. In case of conflict between this specification and AWS D1.1, this specification governs.

1.5.1 Previous Qualifications

Welding procedures previously qualified by test may be accepted for this contract without requalification if the following conditions are met:

a. Testing was performed by an approved testing laboratory, technical consultant, or the Contractor's approved quality control organization.

b. The qualified welding procedure conforms to the requirements of this specification and is applicable to welding conditions encountered under this contract.

c. The welder, welding operator, and tacker qualification tests conform to the requirements of this specification and are applicable to welding conditions encountered under this contract.

1.5.2 Prequalified Procedures

Welding procedures which are considered prequalified as specified in AWS D1.1 will be accepted without further qualification. The Contractor shall submit for approval a listing or an annotated drawing to indicate the joints not prequalified. Procedure qualification shall be required for these joints.

1.5.3 Retests

If welding procedure fails to meet the requirements of AWS D1.1, the procedure specification shall be revised and requalified, or at the Contractor's option, welding procedure may be retested in accordance with AWS D1.1. If the welding procedure is qualified through retesting, all test results, including those of test welds that failed to meet the requirements, shall be submitted with the welding procedure.

1.6 WELDER, WELDING OPERATOR, AND TACKER QUALIFICATION

Each welder, welding operator, and tacker assigned to work on this contract shall be qualified in accordance with the applicable requirements of AWS D1.1 and as specified in this section. Welders, welding operators, and tackers who make acceptable procedure qualification test welds will be considered qualified for the welding procedure used.

1.6.1 Previous Qualifications

At the discretion of the Contracting Officer, welders, welding operators, and tackers qualified by test within the previous 6 months may be accepted for this contract without requalification if all the following conditions are met:

a. Copies of the welding procedure specifications, the procedure qualification test records, and the welder, welding operator, and tacker qualification test records are submitted and approved in accordance with the specified requirements for detail drawings.

b. Testing was performed by an approved testing laboratory, technical consultant, or the Contractor's approved quality control organization.

c. The previously qualified welding procedure conforms to the requirements of this specification and is applicable to welding conditions encountered under this contract.

d. The welder, welding operator, and tacker qualification tests conform to the requirements of this specification and are applicable to welding conditions encountered under this contract.

1.6.2 Certificates

Before assigning any welder, welding operator, or tacker to work under this contract, the Contractor shall submit the names of the welders, welding operators, and tackers to be employed, and certification that each individual is qualified as specified. The certification shall state the type of welding and positions for which the welder, welding operator, or tacker is qualified, the code and procedure under which the individual is qualified, the date qualified, and the name of the firm and person certifying the qualification tests. The certification shall be kept on file, and three copies shall be furnished. The certification shall be kept current for the duration of the contract.

1.6.3 Renewal of Qualification

Requalification of a welder or welding operator shall be required under any of the following conditions:

a. It has been more than 6 months since the welder or welding operator has used the specific welding process for which he is qualified.

b. There is specific reason to question the welder or welding operator's ability to make welds that meet the requirements of these specifications.

c. The welder or welding operator was qualified by an employer other than those firms performing work under this contract, and a qualification test has not been taken within the past 12 months. Records showing periods of employment, name of employer where welder, or welding operator, was last employed, and the process for which qualified shall be submitted as evidence of conformance.

d. A tacker who passes the qualification test shall be considered eligible to perform tack welding indefinitely in the positions and with the processes for which he is qualified, unless there is some specific reason to question the tacker's ability. In such a case, the tacker shall be required to pass the prescribed tack welding test.

1.7 INSPECTOR QUALIFICATION

Inspection and nondestructive testing personnel shall be qualified in accordance with the requirements of ASNT-01 for Levels I or II in the applicable nondestructive testing method. The inspector may be supported by assistant welding inspectors who are not qualified to ASNT-01, and assistant inspectors may perform specific inspection functions under the supervision of the qualified inspector.

1.8 SYMBOLS

Symbols shall be in accordance with AWS A2.4, unless otherwise indicated.

1.9 SAFETY

Safety precautions during welding shall conform to AWS Z49.1.

PART 2 PRODUCTS

2.1 WELDING EQUIPMENT AND MATERIALS

All welding equipment, electrodes, welding wire, and fluxes shall be capable of producing satisfactory welds when used by a qualified welder or welding operator performing qualified welding procedures. All welding equipment and materials shall comply with the applicable requirements of AWS D1.1.

PART 3 EXECUTION

3.1 WELDING OPERATIONS

3.1.1 Requirements

Workmanship and techniques for welded construction shall conform to the requirements of AWS D1.1 and AISC-04 When AWS D1.1 and the AISC-04 specification conflict, the requirements of AWS D1.1 shall govern. All welds exposed in finish work shall be ground smooth.

3.1.2 Identification

Welds shall be identified in one of the following ways:

a. Written records shall be submitted to indicate the location of welds made by each welder, welding operator, or tacker.

b. Each welder, welding operator, or tacker shall be assigned a number, letter, or symbol to identify welds made by that individual. The Contracting Officer may require welders, welding operators, and tackers to apply their symbol next to the weld by means of rubber stamp, felt-tipped marker with waterproof ink, or other methods that do not cause an indentation in the metal. For seam welds, the identification mark shall be adjacent to the weld at 1 meter (3-foot) intervals. Identification with die stamps or electric etchers shall not be allowed.

3.2 QUALITY CONTROL

Testing shall be done by an approved inspection or testing laboratory or technical consultant, or if approved, the Contractor's inspection and testing personnel may be used instead of the commercial inspection or testing laboratory or technical consultant. The Contractor shall perform visual and radiographic inspection to determine conformance with paragraph STANDARDS OF ACCEPTANCE. Procedures and techniques for inspection shall be in accordance with applicable requirements of AWS D1.1, except that in radiographic inspection only film types designated as "fine grain," or "extra fine," shall be employed.

3.3 STANDARDS OF ACCEPTANCE

Dimensional tolerances for welded construction, details of welds, and quality of welds shall be in accordance with the applicable requirements of AWS D1.1 and the contract drawings. Nondestructive testing shall be by visual inspection and radiographic methods. The minimum extent of nondestructive testing shall be random 50 percent of welds or joints, as indicated on the drawings.

3.3.1 Nondestructive Examination

The welding shall be subject to inspection and tests in the mill, shop, and field. Inspection and tests in the mill or shop will not relieve the Contractor of the responsibility to furnish weldments of satisfactory quality. When materials or workmanship do not conform to the specification requirements, the Government reserves the right to reject material or workmanship or both at any time before final acceptance of the structure containing the weldment.

3.3.2 DESTRUCTIVE TESTS

When metallographic specimens are removed from any part of a structure, the Contractor shall make repairs. The Contractor shall employ qualified welders or welding operators, and shall use the proper joints and welding procedures, including peening or heat treatment if required, to develop the full strength of the members and joints cut and to relieve residual stress.

3.4 GOVERNMENT INSPECTION AND TESTING

In addition to the inspection and tests performed by the Contractor for quality control, the Government will perform inspection and testing for acceptance to the extent determined by the Contracting Officer. The costs of such inspection and testing will be borne by the Contractor if unsatisfactory welds are discovered, or by the Government if the welds are satisfactory. The work may be performed by the Government's own forces or under a separate contract for inspection and testing. The Government reserves the right to perform supplemental nondestructive and destructive tests to determine compliance with paragraph STANDARDS OF ACCEPTANCE.

3.5 CORRECTIONS AND REPAIRS

When inspection or testing indicates defects in the weld joints, the welds shall be repaired using a qualified welder or welding operator as applicable. Corrections shall be in accordance with the requirements of AWS D1.1 and the specifications. Defects shall be repaired in accordance with the approved procedures. Defects discovered between passes shall be repaired before additional weld material is deposited. Wherever a defect is removed and repair by welding is not required, the affected area shall be blended into the surrounding surface to eliminate sharp notches, crevices, or corners. After a defect is thought to have been removed, and before rewelding, the area shall be examined by suitable methods to insure that the defect has been eliminated. Repair welds shall meet the inspection requirements for the original welds. Any indication of a defect shall be regarded as a defect, unless reevaluation by nondestructive methods or by surface conditioning shows that no unacceptable defect is present.

END OF SECTION

This page intentionally blank

SECTION 05120

STRUCTURAL STEEL

PART 1 GENERAL

1.1 REFERENCES

The publications listed below form a part of this specification to the extent referenced. The publications are referred to in the text by basic designation only.

AMERICAN INSTITUTE OF STEEL CONSTRUCTION (AISC)

AISC-01	(1993) Load & Resistance Factor Design Manual Vol. 1 - Structural Members, Specifications, and Codes
AISC-02	(1993) Load & Resistance Factor Design Manual Vol. II - Connections
AISC-04	(1989) Specification for Structural Steel Buildings - Allowable Stress Design and Plastic Design
AISC S303	(1992) Code of Standard Practice for Steel Buildings and Bridges
AISC S329	(1986) Allowable Stress Design Specification for Structural Joints Using ASTM A325 or ASTM A490 Bolts

AMERICAN SOCIETY FOR TESTING AND MATERIALS (ASTM)

ASTM A 6	(1993b) General Requirements for Rolled Steel Plates, Shapes, Sheet Piling, and Bars for Structural Use
ASTM A 36	(1993a) Structural Steel
ASTM A 307	(1993a) Carbon Steel Bolts and Studs, 60,000 PSI Tensile Strength
ASTM A 325	(1993) Structural Bolts, Steel, Heat Treated, 120/105 ksi Minimum Tensile Strength
ASTM A 490	(1993) Heat-Treated Steel Structural Bolts, 150 ksi Minimum Tensile Strength
ASTM A 500	(1993) Cold-Formed Welded and Seamless Carbon Steel Structural Tubing in Rounds and Shapes
ASTM A 563	(1993) Carbon and Alloy Steel Nuts

ASTM A 572 (1993) High-Strength Low-Alloy Columbium-Vanadium Steels of Structural Quality

ASTM F 844 (1990) Washers, Steel, Plain (Flat), Unhardened for General Use

AMERICAN SOCIETY OF MECHANICAL ENGINEERS (ASME)

ASME B18.21.1 (1990) Lock Washers (Inch Series)

ASME B46.1 (1985) Surface Texture (Surface Roughness, Waviness and Lay)

AMERICAN WELDING SOCIETY (AWS)

AWS A2.4 (1993) Standard Symbols for Welding, Brazing and Nondestructive Examination

AWS D1.1 (1994) Structural Welding Code - Steel

STEEL STRUCTURES PAINTING COUNCIL (SSPC)

SSPC Paint 25 (1991) Red Iron Oxide, Zinc Oxide, Raw Linseed Oil and Alkyd Primer (without Lead and Chromate Pigments)

1.2 GENERAL REQUIREMENTS

Structural steel fabrication and erection shall be performed by an organization experienced in structural steel work of equivalent magnitude. The Contractor shall be responsible for correctness of detailing, fabrication, and for the correct fitting of structural members. Connections, for any part of the structure not shown on the contract drawings, shall be considered simple shear connections and shall be designed and detailed in accordance with pertinent provisions of AISC-01 and AISC-02. Substitution of sections or modification of connection details will not be accepted unless approved by the Contracting Officer. Welding shall be in accordance with AWS D1.1. High-strength bolting shall be in accordance with AISC S329.

1.3 SUBMITTALS

Government approval is required for submittals with a "GA" designation; submittals having an "FIO" designation are for information only. The following shall be submitted in accordance with Section 01330 SUBMITTAL PROCEDURES:

SD-04 Drawings

Structural Steel System; GA. Structural Connections; GA.

Shop and erection details including members (with their connections) not shown on the contract drawings. Under each shop detailed piece mark a reference as to where located on grid lines or from where it

appears on the design drawings shall be called out on the shop detail. Welds shall be indicated by standard welding symbols in accordance with AWS A2.4.

SD-08 Statements

Erection; GA.

Erection plan of the structural steel framing required. Erection plan shall conform to the requirements of AISC S303, shall be submitted prior to erection, and shall describe all necessary temporary supports, including the sequence of installation and removal.

SD-13 Certificates

Mill Test Reports; GA.

Certified copies of mill test reports for structural steel, structural bolts, nuts, washers and other related structural steel items.

Welder Qualifications; GA.

Certified copies of welder qualifications test records showing qualification in accordance with AWS D1.1.

Fabrication; GA.

A copy of the AISC certificate indicating that the fabrication plant meets the specified structural steelwork category.

SD-14 Samples

High Strength Bolts and Nuts; FIO. Carbon Steel Bolts and Nuts; FIO. Nuts Dimensional Style; FIO. Washers; FIO.

Random samples of bolts, nuts, and washers as delivered to the job site if requested, taken in the presence of the Contracting Officer and provided to the Contracting Officer for testing to establish compliance with specified requirements.

1.4 STORAGE

Material shall be stored out of contact with the ground in such manner and location as will minimize deterioration.

PART 2 PRODUCTS

2.1 STRUCTURAL STEEL

2.1.1 Carbon Grade Steel

Carbon grade steel shall conform to ASTM A 36.

2.1.2 High-Strength Low-Alloy Steel

High-strength low-alloy steel shall conform to ASTM A 572, Grade 50.

2.2 STRUCTURAL TUBING

Structural tubing shall conform to ASTM A 500, Grade B.

2.3 OMITTED

2.4 OMITTED

2.5 HIGH STRENGTH BOLTS AND NUTS

High strength bolts shall conform to ASTM A 325, Type 1 with carbon steel nuts conforming to ASTM A 563, Grade C.

2.6 CARBON STEEL BOLTS

Carbon steel bolts shall conform to ASTM A 307, Grade A with carbon steel nuts conforming to ASTM A 563, Grade A.

2.7 NUTS DIMENSIONAL STYLE

Carbon steel nuts shall be square hex style when used with ASTM A 307 bolts or heavy hex style when used with ASTM A 325 or ASTM A 490 bolts.

2.8 WASHERS

Plain washers shall conform to ASTM F 844. Other types, when required, shall conform to ASME B18.21.1.

2.9 PAINT

Paint shall conform to SSPC Paint 25.

PART 3 EXECUTION

3.1 FABRICATION

Fabrication shall be in accordance with the applicable provisions of AISC-04. Fabrication and assembly shall be done in the shop to the greatest extent possible. The fabricating plant shall be certified under the AISC quality certification program for Category I structural steelwork. Compression joints depending on contact bearing shall have a surface roughness not in excess of 12.7 micrometer (500 micro inches) as determined by ASME B46.1, and ends shall be square within the tolerances for milled ends specified in ASTM A 6. Structural steelwork, except surfaces of steel to be encased in concrete, surfaces to be field welded, surfaces to be fireproofed, and contact surfaces of friction-type high-strength bolted connections shall be prepared for painting in accordance with the AISC-04 and primed with the specified paint.

3.2 ERECTION

Erection of structural steel shall be in accordance with the applicable provisions of AISC-04. For steel joists and joist girders, provide all accessories, extended and special ends and ceiling extensions as required. Do not apply construction loads until bridging and anchorage are completed.

3.2.1 Connections

Anchor bolts and other connections between the structural steel and foundations shall be provided and shall be properly located and built into connecting work.

3.2.2 Base Plates and Bearing Plates

Column base plates for columns and bearing plates for beams, girders, and similar members shall be provided. Base plates and bearing plates shall be provided with full bearing after the supported members have been plumbed and properly positioned, but prior to placing superimposed loads. Separate setting plates under column base plates will not be permitted. The area under the plate shall be damp-packed solidly with bedding mortar, except where nonshrink grout is indicated on the drawings. Bedding mortar and grout shall be as specified in Section 03300 CAST-IN-PLACE STRUCTURAL CONTRETE.

3.2.3 Field Welded Connections

Field welded structural connections shall be completed before load is applied.

3.2.4 Field Priming

After erection, the field bolt heads and nuts, field welds, and any abrasions in the shop coat shall be cleaned and primed with paint of the same quality as that used for the shop coat.

3.3 SPECIAL INSPECTION AND TESTING FOR SEISMIC-RESISTING SYSTEMS

****

NOTE: Include this paragraph only when special inspection and testing for seismic-resisting systems is required by paragraph 3.2 of FEMA 302, NEHRP RECOMMENDED PROVISIONS FOR SEISMIC REGULATIONS FOR NEW BUILDINGS AND OTHER STRUCTURES.

This paragraph will be applicable to both new buildings designed according to TI 809-04, SEISMIC DESIGN FOR BUILDINGS, and the existing building seismic rehabilitation designs done according to TI 8-9-05, SEISMIC EVALUATION AND REHABILITATION FOR BUILDINGS.

The designer must indicate on the drawings all locations and all features for which special inspection and testing is required in accordance with Chapter 3 of FEMA 302. This includes indicating the locations of all structural components and connections requiring inspections.

Add any additional requirements as necessary.

****

Special inspections and testing for seismic-resisting systems and components shall be done in accordance with Section 01452 SPECIAL INSPECTION FOR SEISMIC-RESISTING SYSTEMS.

END OF SECTION

SECTION 05300

STEEL DECKING

PART 1 GENERAL

1.1 REFERENCES

The publications listed below form a part of this specification to the extent referenced. The publications are referred to in the text by basic designation only.

AMERICAN INSTITUTE OF STEEL CONSTRUCTION (AISC)

AISC-04	(1989) Specification for Structural Steel Buildings - Allowable Stress Design and Plastic Design

AMERICAN IRON AND STEEL INSTITUTE (AISI)

AISI SG-673	(1987) Cold-Formed Steel Design Manual

AMERICAN SOCIETY FOR TESTING AND MATERIALS (ASTM)

ASTM A 108	(1993) Steel Bars, Carbon, Cold Finished, Standard Quality
ASTM A 446	(1993) Steel Sheet, Zinc-Coated (Galvanized) by the Hot-Dip Process, Structural (Physical) Quality
ASTM A 525	(1993) General Requirements for Steel Sheet, Zinc-Coated (Galvanized) by the Hot-Dip Process
ASTM A 611	(1994) Steel, Sheet, Carbon, Cold-Rolled, Structural Quality
ASTM A 780	(1993a) Repair of Damaged and Uncoated Areas of Hot-Dipped Galvanized Coatings
ASTM A 792	(1993a) Steel Sheet, 55% Aluminum-Zinc Alloy-Coated by the Hot-Dip Process, General Requirements

AMERICAN WELDING SOCIETY (AWS)

AWS D1.1	(1994) Structural Welding Code - Steel
AWS D1.3	(1989) Structural Welding Code - Sheet Steel

STEEL DECK INSTITUTE (SDI)

SDI-02 (1987; Amended 1991) Diaphragm Design Manual

SDI Pub No 28 (1992) Design Manual for Composite Decks, Form Decks, Roof Decks, and Cellular Metal Floor Deck with Electrical Distribution

STEEL STRUCTURES PAINTING COUNCIL (SSPC)

SSPC Paint 20 (1991) Zinc-Rich Primers (Type I - Inorganic and Type II - Organic)

1.2 SUBMITTALS

Government approval is required for submittals with a "GA" designation; submittals having an "FIO" designation are for information only. The following shall be submitted in accordance with Section 01330 SUBMITTAL PROCEDURES:

SD-01 Data

Deck Units; GA.

Design computations for the structural properties of the deck units or SDI certification that the units are designed in accordance with SDI specifications.

SD-04 Drawings

Deck Units; GA. Accessories; GA. Attachments; GA. Holes and Openings; GA.

Drawings shall include type, configuration, structural properties, location and necessary details of deck units, accessories, and supporting members; size and location of holes to be cut and reinforcement to be provided; location and sequence of welded or fastener connections; and the manufacturer's erection instructions.

SD-13 Certificates

Deck Units; FIO. Attachments; FIO.

Manufacturer's certificates attesting that the decking material meets the specified requirements. Manufacturer's certificate attesting that the operators are authorized to use the low-velocity piston tool.

SD-14 Samples

Deck Units; FIO. Accessories; FIO.

A 2 square foot sample of the decking material to be used, along with a sample of each of the accessories used. A sample of acoustical material to be used shall be included.

SD-18 Statements

Attachments; FIO.

Prior to welding operations, copies of qualified procedures and lists of names and identification symbols of qualified welders and welding operators.

1.3 DELIVERY, STORAGE, AND HANDLING

Deck units shall be delivered to the site in a dry and undamaged condition, stored off the ground with one end elevated and stored under a weathertight covering permitting good air circulation. Finish of deck units shall be maintained at all times by using touch-up paint whenever necessary to prevent the formation of rust.

PART 2 PRODUCTS

2.1 DECK UNITS

Deck units shall conform to SDI Pub No 28. Panels of maximum possible lengths shall be used to minimize end laps. Fabricate deck units in lengths to span three or more supports with flush, telescoped, or nested 50.8 mm (2-inch) laps at ends, and interlocking or nested side laps, unless otherwise indicated. Deck with cross-sectional configuration differing from the units indicated may be used, provided that the properties of the proposed units, determined in accordance with AISI SG-673, are equal to or greater than the properties of the units indicated and that the material will fit the space provided without requiring revisions to adjacent materials or systems. Provide fire resistance label as required.

2.1.1 Roof Deck

Steel deck used in conjunction with insulation ~~and built-up roofing~~ shall conform to ASTM A 446, ASTM A 611 or ASTM A 792. Roof deck units shall be fabricated of the steel design thickness required by the design drawings and shall be zinc-coated in conformance with ASTM A 525, G90 coating class or aluminum-zinc coated in accordance with ASTM A 792 Coating Designation AZ55.

2.1.2 Omitted

2.1.3 Composite Deck

Deck used as part of a composite deck assembly shall conform to ASTM A 446 or ASTM A 611. Deck used as the tension reinforcing in composite deck shall be fabricated of the steel design thickness required by the design drawings, minimum of 22 gage, and shall be zinc-coated in conformance with ASTM A 525, G90 coating class. Deck units used in composite deck shall have adequate embossment to develop mechanical shear bond to provide composite action between the deck and the concrete.

2.1.4 Form Deck

Deck used as a permanent form for concrete shall conform to ASTM A 446 or ASTM A 611. Deck used as a form for concrete shall be fabricated of the steel design thickness required by the design drawings and shall be zinc-coated in conformance with ASTM A 525, G90 coating class.

2.1.5 Sump Pans

Sump pans shall be provided for roof drains and shall be minimum 1.897 mm (0.0747 inch) thick steel, recessed type. Sump pans shall be shaped to meet roof slope by the supplier or by a sheet metal specialist.

Bearing flanges of sump pans shall overlap steel deck a minimum of 75 mm (3 inches). Opening in bottom of pan shall be shaped, sized and reinforced to receive roof drain.

2.1.6 Shear Connectors

Shear connectors shall be headed stud type, ASTM A 108, Grade 1015 or 1020, cold finished carbon steel with dimensions complying with AISC-04.

2.2 TOUCH-UP PAINT

Touch-up paint for shop-painted units shall be of the same type used for the shop painting, and touch-up paint for zinc-coated units shall be an approved galvanizing repair paint with a high-zinc dust content. Welds shall be touched up with paint conforming to SSPC Paint 20 in accordance with ASTM A 780. Finish of deck units and accessories shall be maintained by using touchup paint whenever necessary to prevent the formation of rust.

2.3 ADJUSTING PLATES

Adjusting plates or segments of deck units shall be provided in locations too narrow to accommodate full-size units. As far as practical, the plates shall be the same thickness and configuration as the deck units.

2.4 CLOSURE PLATES

2.4.1 Closure Plates for Roof Deck

Voids above interior walls shall be closed with sheet metal where shown. Open deck cells at parapets, end walls, eaves and openings through roofs shall be closed with sheet metal. Sheet metal shall be same thickness as deck units.

2.4.2 Closure Plates for Composite Deck

The concrete shall be supported and retained at each floor level. Provide edge closures at all edges of the slab of sufficient strength and stiffness to support the wet concrete. Metal closures shall be provided for all openings in composite steel deck 6 mm (1/4 inch) and over, including but not limited to:

2.4.2.1 Cover Plates to Close Panels

Cover plates to close panel edge and end conditions and where panels change direction or abut. Butt joints in composite steel deck may receive a tape joint cover.

2.4.2.2 Column Closures to Close Openings

Column closures to close openings between steel deck and structural steel columns.

2.4.2.3 Sheet Metal

Where deck is cut for passage of pipes, ducts, columns, etc., and deck is to remain exposed, provide a neatly cut sheet metal collar to cover edges of deck. Do not cut deck until after installation of supplemental

supports.

2.5 ACCESSORIES

The manufacturer's standard accessories shall be furnished as necessary to complete the deck installation. Metal accessories shall be of the same material as the deck and have minimum design thickness as follows: saddles, 1.204 mm (0.0474 inch); welding washers, 1.519 mm (0.0598 inch); cant strip, 0.749 mm (0.0295 inch); other metal accessories, 0.909 mm (0.0358 inch); unless otherwise indicated. Accessories shall include but not be limited to saddles, welding washers, cant strips, butt cover plates, underlapping sleeves and ridge and valley plates.

PART 3 EXECUTION

3.1 ERECTION

Erection of deck and accessories shall be in accordance with FIO and the approved detail drawings. Damaged deck and accessories including material which is permanently stained or contaminated, with burned holes or deformed shall not be installed. The deck units shall be placed on secure supports, properly adjusted and aligned at right angles to supports before being permanently secured in place. The deck shall not be FIO used for storage or as a working platform until the units have been secured in position. Shoring shall be in position before concrete placement begins in composite or form deck. Loads shall be distributed by appropriate means to prevent damage during construction and to the completed assembly. The maximum uniform distributed storage load shall not exceed the design live load. There shall be no loads suspended directly from the steel deck.

3.2 SHORING

Shoring requirements for placing and curing of concrete in the composite floor deck assemblies shall be as shown.

3.3 ATTACHMENTS

All fasteners shall be installed in accordance with the manufacturer's recommended procedure, except as otherwise specified. The deck units shall be welded with nominal 16 mm (5/8 inch) diameter puddle welds or fastened with screws, powder-actuated fasteners or pneumatically driven fasteners to supports as indicated on the design drawings and in accordance with requirements of SDI Pub No 28. All welding of steel deck shall be in accordance with AWS D1.3 using methods and electrodes as recommended by the manufacturer of the steel deck being used. Welds shall be made only by operators previously qualified by tests prescribed in AWS D1.3 to perform the type of work required. Welding washers shall not be used at the connections of the deck to supports. Welding washers shall not be used at sidelaps. Holes and similar defects will not be acceptable. Deck ends shall be lapped 50 mm (2 inches). All partial or segments of deck units shall be attached to structural supports in accordance with Section 2.5 of SDI-02. Powder-actuated fasteners shall be driven with a low-velocity piston tool by an operator authorized by the manufacturer of the piston tool. Pneumatically driven fasteners shall be driven with a low-velocity fastening tool and shall comply with the manufacturer's recommendations. Shear connectors shall be attached as shown and shall be welded as per AWS D1.1 through the steel deck to the steel member.

3.4 HOLES AND OPENINGS

All holes and openings required shall be coordinated with the drawings, specifications and other trades. Holes and openings shall be drilled or cut, reinforced and framed as indicated on the drawings or described in the specifications and as required for rigidity and load capacity. Holes and openings less than 150 mm (6 inches) across require no reinforcement. Holes and openings 150 to 300 mm (6 to 12 inches) across shall be reinforced by 1.204 mm (0.0474 inch) thick steel sheet at least 300 mm (12 inches) wider and longer than the opening and be fastened to the steel deck at each corner of the sheet and at a maximum of 150 mm (6 inches) on center. Holes and openings larger than 300 mm (12 inches) shall be reinforced by steel angles installed perpendicular to the steel joists and supported by the adjacent steel joists. Steel angles shall be installed perpendicular to the deck ribs and shall be fastened to the angles perpendicular to the steel joists. Openings must not interfere with seismic members such as chords and drag struts.

3.5 PREPARATION OF FIRE-PROOFED SURFACES

Deck surfaces, both composite and noncomposite, which are to receive sprayed-on fireproofing, shall be galvanized and shall be free of all grease, mill oil, paraffin, dirt, salt and other contaminants which impair adhesion of the fireproofing. Any required cleaning shall be done prior to steel deck installation using a cleaning method that is compatible with the sprayed-on fireproofing.

END OF SECTION

SECTION 05450

PRE-ENGINEERED LIGHT GAUGE STEEL TRUSSED FRAMES

PART 1 GENERAL

1.1 SCOPE

The work under this section consists of furnishing and installing all pre-engineered light gauge trusses as shown on drawings and as specified herein including headers, outriggers, supplemental rafters and incidental framing for a complete assembly within the extent shown on the drawings.

Pre-engineered light gauge steel trusses include planar structural units consisting of welded, screwed or bolted connected members which are fabricated, cut and assembled prior to delivery or at the job site.

Types of prefabricated trusses include:

Gable-shaped trusses.
Monopitch trusses.
Irregular shaped trusses.
Supplemental headers, studs and other incidental framed assemblies.

1.2 REFERENCE STANDARDS

The following documents of the issue in effect on date of material procurement, referred to thereafter by basic designation only form a part of this specification to the extent indicated by reference thereto.

AMERICAN IRON AND STEEL INSTITUTE (AISI)

AISI SG-673	(1987) Specification for the Design of Cold-Formed Steel Structural Members

AMERICAN SOCIETY OF TESTING MATERIALS (ASTM)

ASTM A 446	(1989) Specification for Steel sheet, Zinc Coated (Galvanized) by the Hot-Dip Process, Physical (Structural) Quality Grade A, Fy = 230 MPa (33 ksi): 18 gauge and lighter Grade D, Fy = 345 MPa (50 ksi): 16 gauge and heavier Galvanizing: G60 coating class

1.3 FABRICATOR'S QUALIFICATIONS

Trusses shall be designed, fabricated, and erected by a firm which has a record including a minimum of five years of successfully fabricating trussed assemblies similar to scope required and which practices a quality control program which includes inspection by an independent inspection and testing agency.

1.4 SUBMITTALS

Government approval is required for submittals with a "GA" designation; submittals having an "FIO" designation are for information only. The following shall be submitted in accordance with Section 01330 SUBMITTAL PROCEDURES:

1.4.1 Product Data; FIO.

Submit fabricator's technical data covering materials, shapes, hardware, fabrication process, handling and erection.

1.4.2 Certificate of Compliance; FIO.

Submit certificate, signed by an officer of fabricating firm, indicating trusses and related assemblies to be supplied for this project comply with all indicated requirements.

1.4.3 Shop Drawings; GA.

Submit shop drawings showing shapes and dimensions of members to be used including pitch, span, camber configuration and spacing for each type or configuration of truss required. Show all bearing and anchorage details. Specify and detail all supplemental strapping, bracing clips and other accessories required for proper installation. Shop drawings shall include erection drawings and all placement sequences and instructions.

1.4.4 Design Analysis; GA.

To the extent engineering design considerations are indicated as fabricator's responsibility, submit design analysis and test reports indicating loading, section properties, allowable stress, stress diagrams and calculations, and similar information needed for analysis and to ensure trusses comply with requirements. All designs shall bear the name and seal of a structural engineer licensed to practice in the state where trusses are to be erected.

1.4.5 Basis of Design

Basis of design is indicated on drawings.

1.5 DELIVERY, STORAGE, HANDLING

Handle and store truss materials and accessories, and in accordance with manufacturer's instructions to avoid damage from bending, overturning or other cause for which truss is not designed to resist or endure. Storage shall be off-ground in a dry ventilated space or protect with waterproof coverings.

Time fabrication and erection of trusses to avoid extended on-site storage and to avoid delaying work of other trades whose work must follow erection of trusses.

PART 2 PRODUCTS

2.1 FRAMING COMPONENTS

2.1.1 Available Manufacturer

Subject to compliance with requirements, framing shapes and components for pre-engineered light gauge prefabricated steel trusses shall be as manufactured or recommended by approved manufacturer.

2.1.2 Design, Analysis and Computation

Design, analysis, and computation of section properties shall be in conformance with the specification for the Design of Cold-Formed Steel Structural Members of the American Iron and Steel Institute.

2.1.3 Galvanized Structural Members

All galvanized structural members shall be formed from steel that corresponds to the requirements of ASTM A-446, Grade A (minimum yield of 33 ksi) for 18 gauge steel or lighter and ASTM A-446, Grade D (minimum yield of 50 ksi) for 16 gauge or heavier.

2.1.4 Steel Members

All steel members shall be galvanized with a G60 coating minimum. All truss top and bottom chord members and rafters shall be 16 gauge minimum.

2.2 FASTENERS

Framing components shall be fastened to each other by screws or welding as recommended by approved manufacturer.

PART 3 EXECUTION

3.1 FABRICATION

Light gauge steel prefabricated trusses shall be fabricated either on or off site prior to erection.

All metal framing shall be erected in accordance with the current printed instructions of the approved subcontractor or his fabricator.

All framing components shall be straight and true prior to fabrication. Flattening or straightening of components shall be done by a process not injurious to materials.

All framing components shall be cut neatly to fit squarely against abutting members.

No splices will be allowed in trusses except at joints.

Provide all angles, clips, and other miscellaneous pieces necessary to attach light gauge framing panels to building structure or to attach other materials to light gauge framing panels.

All components shall be set square in line and shall be held firmly in position until properly fastened.

All panel components shall be joined by screws or welding.

Finished assemblies shall be free from twists, bends, kinks, or open joints with all members straight, square, and true to line.

3.2 ERECTION

Prefabricated trusses shall be braced against racking. Lifting of trusses shall be done so as to not cause local distortion in any member.

All light gauge steel framing shall be erected by approved methods using equipment of adequate capacity to safely perform the work.

The Contractor is responsible for checking dimensions and assuring fit of all members and panels before erection begins.

All work shall be erected plumb and level and to dimensions, spacings and elevations indicated on drawings.

Members shall be of size and spacing shown on the approved shop drawings.

Provide web stiffeners and reinforcement at reaction points where required by analysis or to suit details.

Hoist units in place by means of lifting equipment suited to sizes and types of trusses required, applied at designated lift points as recommended by fabricator, exercising care not to damage truss members or joists by out-of- plane end or other causes.

Provide temporary bracing as required to maintain trusses plumb, parallel and in location indicated, until permanent bracing is installed.

Anchor trusses securely at all bearing points to comply with methods and details indicated.

Install permanent bracing and related components to enable trusses to maintain design spacing, withstand live and dead loads including lateral loads, and to comply with other indicated requirements.

Do not cut or remove truss members.

END OF SECTION

This page intentionally blank

SECTION 05500

MISCELLANEOUS METAL

PART 1 GENERAL

1.1 REFERENCES

The publications listed below form a part of this specification to the extent referenced. The publications are referred to in the text by basic designation only.

ALUMINUM ASSOCIATION (AA)

AA DAF-45	(1980) Designation System for Aluminum Finishes
AA SAA-46	(1978) Standards for Anodized Architectural Aluminum

AMERICAN SOCIETY FOR TESTING AND MATERIALS (ASTM)

ASTM A 36	(1994a) Carbon Structural Steel
ASTM A 53	(1993a) Pipe, Steel, Black and Hot-Dipped, Zinc-Coated Welded and Seamless
ASTM A 123	(1989a) Zinc (Hot-Dip Galvanized) Coatings on Iron and Steel Products
ASTM A 500	(1993) Cold-Formed Welded and Seamless Carbon Steel Structural Tubing in Rounds and Shapes
ASTM A 653	(1994) Steel Sheet, Zinc-Coated (Galvanized) or Zinc-Iron Alloy-Coated (Galvannealed) by the Hot-Dip Process
ASTM A 924	(1994) General Requirements for Steel Sheet, Metallic-Coated by the Hot-Dip Process

AMERICAN WELDING SOCIETY (AWS)

AWS D1.1	(1994) Structural Welding Code - Steel

1.2 SUBMITTALS

Government approval is required for submittals with a "GA" designation; submittals having an "FIO" designation are for information only. The following shall be submitted in accordance with Section 01330 SUBMITTAL PROCEDURES:

SD-04 Drawings

Miscellaneous Metal Items; GA.

Detail drawings indicating material thickness, type, grade, and class; dimensions; and construction details. A reference as to where located on grid lines or from where it appears on the design drawings shall be called out on the shop detail. Drawings shall include catalog cuts, erection details, manufacturer's descriptive data and installation instructions, and templates. Detail drawings for the following items: access doors and panels, expansion joint covers, floor mats, steel stairs.

SD-14 Samples

Miscellaneous Metal Items; FIO.

Samples of the following items: expansion joint covers. Samples shall be full size, taken from manufacturer's stock, and shall be complete as required for installation in the structure. Samples may be installed in the work, provided each sample is clearly identified and its location recorded.

1.3 GENERAL REQUIREMENTS

The Contractor shall verify all measurements and shall take all field measurements necessary before fabrication. Welding to or on structural steel shall be in accordance with AWS D1.1. Items specified to be galvanized, when practicable and not indicated otherwise, shall be hot-dip galvanized after fabrication. Galvanizing shall be in accordance with ASTM A 123, ASTM A 653, or ASTM A 924, as applicable. Exposed fastenings shall be compatible materials, shall generally match in color and finish, and shall harmonize with the material to which fastenings are applied. Materials and parts necessary to complete each item, even though such work is not definitely shown or specified, shall be included. Poor matching of holes for fasteners shall be cause for rejection. Fastenings shall be concealed where practicable. Thickness of metal and details of assembly and supports shall provide strength and stiffness. Joints exposed to the weather shall be formed to exclude water.

1.4 DISSIMILAR MATERIALS

Where dissimilar metals are in contact, or where aluminum is in contact with concrete, mortar, masonry, wet or pressure-treated wood, or absorptive materials subject to wetting, the surfaces shall be protected with a coat of bituminous paint or asphalt varnish.

1.5 WORKMANSHIP

Miscellaneous metalwork shall be well formed to shape and size, with sharp lines and angles and true curves. Drilling and punching shall produce clean true lines and surfaces. Welding shall be continuous along the entire area of contact except where tack welding is permitted. Exposed connections of work in place shall not be tack welded. Exposed welds shall be ground smooth. Exposed surfaces of work in place shall have a smooth finish, and unless otherwise approved, exposed riveting shall be flush. Where

tight fits are required, joints shall be milled. Corner joints shall be coped or mitered, well formed, and in true alignment. Work shall be accurately set to established lines and elevations and securely fastened in place. Installation shall be in accordance with manufacturer's installation instructions and approved drawings, cuts, and details.

1.6 ANCHORAGE

Anchorage shall be provided where necessary for fastening miscellaneous metal items securely in place. Anchorage not otherwise specified or indicated shall include slotted inserts made to engage with the anchors, expansion shields, and power-driven fasteners when approved for concrete; toggle bolts and through bolts for masonry; machine and carriage bolts for steel; and lag bolts and screws for wood.

PART 2 PRODUCTS

2.1 ALUMINUM FINISHES

Unless otherwise specified, aluminum items shall have standard mill finish or anodized finish conforming to AA SAA-46. The thickness of the coating shall be not less than that specified for protective and decorative type finishes for items used in interior locations or architectural Class I type finish for items used in exterior locations in AA DAF-45. Items to be anodized shall receive a polished satin finish pretreatment and a clear lacquer overcoating.

2.2 SHOP PAINTING

Surfaces of ferrous metal except galvanized surfaces, shall be cleaned and shop coated with the manufacturer's standard protective coating unless otherwise specified. Surfaces of items to be embedded in concrete shall not be painted. Items to be finish painted shall be prepared according to manufacturer's recommendations or as specified.

2.3 ACCESS DOORS AND PANELS

Doors and panels shall be flush type unless otherwise indicated. Frames for access doors shall be fabricated of not lighter than 1.519 mm steel with welded joints and finished with anchorage for securing into construction. Access doors shall be a minimum of 350 by 500 mm and of not lighter than 1.897 mm steel, with stiffened edges, complete with attachments. Access doors shall be hinged to frame and provided with a flush face, screw driver operated latch. Exposed metal surfaces shall have a shop applied prime coat.

2.4 OMITTED

2.5 OMITTED

2.6 OMITTED

2.7 OMITTED

2.8 OMITTED

2.9 OMITTED

2.10 DOWNSPOUT BOOTS

Downspout boots shall be cast iron with receiving bells sized to fit downspouts.

2.11 EXPANSION JOINT COVERS

Expansion joint covers shall be constructed of extruded aluminum with anodized satin finish for walls and ceilings and with standard mill finish for floor covers and exterior covers. Plates, backup angles, expansion filler strip and anchors shall be designed as indicated. Expansion joint system shall provide a 1 hour fire rating.

2.12 OMITTED

2.13 OMITTED

2.14 OMITTED

2.15 BLOCK VENTS

Block vents shall be the same size as the masonry units or sized as indicated, and shall be of extruded aluminum with integral water stop and sliding interior closer or damper operable from the outside. Insect screen shall be provided at the back of the vent. Louvered opening shall have top and bottom drip lips, and the net ventilating area with closer or damper open shall be at least 35 percent of the gross wall opening. The frames shall have a structural strength adequate to permit use in masonry walls without a lintel. Vents shall have a factory color finish.

2.16 HANDRAILS

Handrails shall be designed to resist a concentrated load of 890 N in any direction at any point of the top of the rail or 292 Newtons per meter applied horizontally to top of the rail, whichever is more severe.

2.16.1 Steel Handrails, Including Carbon Steel Inserts

Steel handrails, including inserts in concrete, shall be steel pipe conforming to ASTM A 53 or structural tubing conforming to ASTM A 500, Grade A or B of equivalent strength. Steel railings shall be 40 mm nominal size. Railings shall be shop painted. Pipe collars shall be steel.

Fabrication: Joint posts, rail, and corners shall be fabricated by one of the following methods:

(1) Flush type rail fittings of commercial standard, welded and ground smooth with railing splice locks secured with 10 mm hexagonal recessed-head setscrews.

(2) Mitered and welded joints by fitting post to top rail and intermediate rail to post, mitering corners, groove welding joints, and grinding smooth. Railing splices shall be butted and reinforced by a tight fitting interior sleeve not less than 150 mm long.

(3) Railings may be bent at corners in lieu of jointing, provided bends are made in suitable jigs and the pipe is not crushed.

2.17 OMITTED

2.18 OMITTED

2.19 OMITTED

2.20 MIRROR FRAMES

Frames for plate glass mirrors larger than 450 by 750 mm shall be fabricated from corrosion-resisting steel with satin finish. Frames shall be provided with concealed fittings and tamperproof mountings.

2.21 MISCELLANEOUS

Miscellaneous plates and shapes for items that do not form a part of the structural steel framework, such as lintels, sill angles, miscellaneous mountings, and frames, screens, gratings, shelf angles, ladders, pipe sleeves, pipe post guards, corner guards, jambs, backing for curtain rods shall be provided to complete the work.

2.22 OMITTED

2.23 ROLL-UP FLOOR MATS

Roll-up mats shall be of aluminum construction abrasive surface. Roll-up mats shall be for use in recessed area. Construction details of recessed areas shall be shown on the drawings.

2.24 OMITTED

2.25 OMITTED

2.26 OMITTED

2.27 OMITTED

2.28 STEEL STAIRS

Steel stairs shall be complete with structural or formed channel stringers, metal pan non-slip cement-filled treads landings, columns, handrails, and necessary bolts and other fastenings as indicated. Structural steel shall conform to ASTM A 36. Stairs and accessories shall be shop primed. Risers on stairs with metal pan treads shall be deformed to form a sanitary cove to retain the tread concrete. Treads and platforms of steel stairs shall support a uniform load of 5 kPa (100 psf) or a concentrated load of 136 kg (300 pounds), placed in position to cause maximum stress. Integral nosings shall have braces extended into the concrete fill.

2.29 BICYCLE RACKS

For bicycle racks see specification Section 13125, paragraph BIKE RACKS.

PART 3 EXECUTION

3.1 GENERAL REQUIREMENTS

All items shall be installed at the locations shown and according to the manufacturer's recommendations. Items listed below require additional procedures as specified.

3.2 REMOVABLE ACCESS PANELS

A removable access panel not less than 300 by 300 mm shall be installed directly below each valve, flow indicator, damper, or air splitter that is located above the ceiling, other than an acoustical ceiling, and that would otherwise not be accessible.

3.3 OMITTED

3.4 OMITTED

3.5 OMITTED

3.6 INSTALLATION OF DOWNSPOUT BOOTS

Downspouts shall be secured to building through integral lips with appropriate fasteners.

3.7 ATTACHMENT OF HANDRAILS

3.7.1 Installation of Steel Handrails

Installation shall be base plates bolted to stringers or structural steel framework. Rail ends shall be secured by steel pipe flanges through-bolted to a back plate or by 6 mm lag bolts to studs or solid backing.

3.8 OMITTED

3.9 OMITTED

3.10 OMITTED

3.11 RECESSED FLOOR MATS

Contractor shall verify field measurements prior to releasing materials for fabrication by the manufacturer. A mat frame shall be used to ensure recess accuracy in size, shape and depth. Drain pit shall be formed by blocking out concrete when frames are installed. Pit shall be dampproofed after concrete has set. Frames shall be assembled onsite and installed so that upper edge will be level with finished floor surface. A cement base shall be screeded inside the mat recess frame area using the edge provided by the frame as a guide. The frame shall be anchored into the cement with anchor pins a minimum of 610 mm on centers.

END OF SECTION

This page intentionally blank

SECTION 06100

ROUGH CARPENTRY

PART 1 GENERAL

1.1 REFERENCES

The publications listed below form a part of this specification to the extent referenced. The publications are referred to in the text by basic designation only.

AMERICAN SOCIETY FOR TESTING AND MATERIALS (ASTM)

ASTM A 307	(1994) Carbon Steel Bolts and Studs, 60,000 PSI Tensile Strength
ASTM C 518	(1991) Steady-State Heat Flux Measurements and Thermal Transmission Properties By Means of the Heat Flow Meter Apparatus
ASTM C 553	(1992) Mineral Fiber Blanket Thermal Insulation for Commercial and Industrial Applications
ASTM C 665	(1994) Mineral-Fiber Blanket Thermal Insulation for Light Frame Construction and Manufactured Housing
ASTM C 1136	(1992) Flexible, Low Permeance Vapor Retarders for Thermal Insulation
ASTM E 84	(1995a) Surface Burning Characteristics of Building Materials

AMERICAN WOOD PRESERVERS' ASSOCIATION (AWPA)

AWPA C2	(1995) Lumber, Timber, Bridge Ties and Mine Ties - Preservative Treatment by Pressure Processes
AWPA M4	(1995) Standard for the Care of Preservative-Treated Wood Products
AWPA P5	(1995) Standards for Waterborne Preservatives

1.2 SUBMITTALS

Government approval is required for submittals with a "GA" designation; submittals having an "FIO" designation are for information only. The following shall be submitted in accordance with Section 01330 SUBMITTAL PROCEDURES:

SD-13 Certificates

Grading and Marking; FIO.

Manufacturer's certificates (audited by an American Lumber Standards approved agency) attesting that lumber and material not normally grade marked or exempt from being grade marked meet the specified requirements. Certificate of Inspection issued for grade marked material by an American Lumber Standards Committee (ALSC) recognized lumber inspection agency prior to shipment.

1.3 DELIVERY AND STORAGE

Materials shall be delivered to the site in undamaged condition, stored off ground in fully covered, well ventilated areas, and protected from extreme changes in temperature and humidity.

PART 2 PRODUCTS

2.1 LUMBER AND SHEATHING

2.1.1 Grading and Marking

2.1.1.1 Lumber Products

Solid sawn lumber shall bear an authorized gradestamp or grademark recongnized by ALSC, or an ALSC recognized certification stamp, mark, or hammerbrand.

2.1.2 Sizes

Lumber and material sizes shall conform to requirements of the rules or standards under which produced. Unless otherwise specified, lumber shall be surfaced on four sides. Size references, unless otherwise specified, are nominal sizes, and actual sizes shall be within manufacturing tolerances allowed by the standard under which the product is produced.

2.1.3 Treatment

Exposed areas of treated wood that are cut or drilled after treatment shall receive a field treatment in accordance with AWPA M4. Items of all-heart material of cedar, cypress, or redwood will not require preservative treatment.

2.1.3.1 Lumber and Timbers

Lumber and timbers shall be treated in accordance with AWPA C2 with waterborne preservatives listed in AWPA P5 to a retention level as follows:

a. 4 kg per cubic meter intended for above ground use.

b. 6.4 kg per cubic meter intended for ground contact and fresh water use.

2.1.4 Moisture Content

At the time lumber and other materials are delivered and when installed in the work their moisture content shall be as follows:

Treated and Untreated Lumber: One hundred mm or less, nominal thickness, 19 percent maximum. One hundred twenty-five mm (or more, nominal thickness, 23 percent maximum in a 75 mm perimeter of the timber cross-section.

2.2 ACCESSORIES AND NAILS

Markings shall identify both the strength grade and the manufacturer. Accessories and nails shall conform to the following:

2.2.1 Anchor Bolts

ASTM A 307, size as indicated, complete with nuts and washers.

2.2.2 Bolts

Lag, Toggle, and Miscellaneous Bolts and Screws:

Type, size, and finish best suited for intended use. Finish options include zinc compounds, cadmium, and aluminum paint impregnated finishes.

2.2.3 Omitted

2.2.4 Expansion Shields

Type and size best suited for intended use.

2.3 INSULATION

Thermal resistance of insulation shall be not less than the R-19 exterior wall and R-38 roof. ~~R-values shown.~~ R-values shall be determined at 24 degrees C in accordance with ASTM C 518. Insulation shall contain the highest practicable percentage of recovered material which has been recovered or diverted from solid waste, but not including material reused in a manufacturing process. Where two materials have the same price and performance, the one containing the higher recovered material content shall be provided. Insulation shall be the standard product of a manufacturer and factory marked or identified with manufacturer's name or trademark and R-value. Identification shall be on individual pieces or individual packages. Materials containing more than one percent asbestos will not be allowed.

2.3.1 Batt or Blanket

2.3.1.1 Glass Fiber Batts and Rolls

Glass fiber batts and rolls shall conform to ASTM C 665, Type I unfaced insulation for acoustical use and Type III foil faced insulation for exposed use in mechanical room, Class A having a UL rating of 25 and a

smoke developed rating of 150 or less when tested in accordance with ASTM E 84. Width and length shall suit construction conditions.

2.3.1.2 Mineral Fiber Batt

Mineral fiber batt shall conform to ASTM C 665, Type I unfaced insulation for acoustical use and Type III foil faced insulation Class C for exposed use in mechanical room.

2.3.1.3 Mineral Fiber Blanket

Mineral fiber blanket shall conform to ASTM C 553, Type I, Class 6. Blankets shall be sized to suit construction conditions, resilient type for use below and above ambient temperature to 195 degrees C. Blankets shall have a factory applied vapor-barrier facing on one side. Vapor barriers shall be fire retardant, high vapor transmission, and aluminum foil laminated to crepe paper type conforming to ASTM C 1136, Type II for exposed use in mechanical room. Nominal density shall be 12 kg per cubic meter.

PART 3 EXECUTION

3.1 OMITTED

3.2 OMITTED

3.3 OMITTED

3.4 OMITTED

3.5 OMITTED

3.6 INSTALLATION OF MISCELLANEOUS WOOD MEMBERS

3.6.1 Omitted

3.6.2 Omitted

3.6.3 Blocking

Blocking shall be provided as necessary for application of building items. Blocking shall be cut to fit between framing members and rigidly bolted thereto.

3.7 OMITTED

3.8 INSTALLATION OF INSULATION

Insulation shall be installed after construction has advanced to a point that the installed insulation will not be damaged by remaining work. For thermal insulation the actual installed thickness shall provide the thermal resistance (R-values) shown. For acoustical insulation the installed thickness shall be as shown. Unless otherwise specified, installation shall be in accordance with the manufacturer's recommendation.

END OF SECTION

This page intentionally blank

SECTION 06200

FINISH CARPENTRY

PART 1 GENERAL

1.1 REFERENCES

The publications listed below form a part of this specification to the extent referenced. The publications are referred to in the text by basic designation only.

AMERICAN SOCIETY FOR TESTING AND MATERIALS (ASTM)

ASTM F 547	(1977; R 1990) Definitions of Terms Relating to Nails for Use with Wood and Wood-Base Materials

WESTERN WOOD PRODUCTS ASSOCIATION (WWPA)

WWPA-01	(1991; Supple No. 3) Western Lumber Grading Rules 91

1.2 SUBMITTALS

Government approval is required for submittals with a "GA" designation; submittals having an "FIO" designation are for information only. The following shall be submitted in accordance with Section 01330 SUBMITTAL PROCEDURES:

SD-04 Drawings

Finish Carpentry; FIO.

Drawings showing fabricated items and special mill and woodwork items. Drawings shall indicate materials and details of construction, methods of fastening, erection, and installation.

SD-14 Samples

Moldings; FIO.

Samples shall be of sufficient size to show patterns, color ranges, and types, as applicable, of the material proposed to be used.

1.3 DELIVERY AND STORAGE

Materials shall be delivered to the site in undamaged condition, stored off ground in fully covered, well-ventilated areas, and protected from extreme changes in temperature and humidity.

PART 2 PRODUCTS

2.1 WOOD ITEMS

2.1.1 Grading and Marking

Materials shall bear the grademark, stamp or other identifying marks indicating grades of material and rules or standards under which produced. Such identifying marks on a material shall be in accordance with the rule or standard under which the material is produced, including requirements for qualifications and authority of the inspection organization, usage of authorized identification, and information included in the identification. The inspection agency for lumber shall be certified by the Board of Review, American Lumber Standards Committee, to grade the species used. Except for plywood and lumber, bundle marking will be permitted in lieu of marking each individual piece. Surfaces that are to be architecturally exposed to view shall not bear grademarks, stamps, or other types of identifying marks.

2.1.2 Sizes and Patterns

Lumber sizes and patterns shall conform to rules or standards under which produced. Unless otherwise specified, lumber shall be surfaced on four sides. Sizes and patterns for materials other than lumber shall conform to requirements of the rules or standards under which produced. Size references, unless otherwise specified, are nominal sizes, and actual sizes shall be within manufacturing tolerances allowed by the standard under which the product is produced.

2.1.3 Moisture Content

The maximum moisture content of untreated trim and wood siding shall be 15 percent at the time of delivery to the jobsite and when installed. Moisture content of all other material shall be in accordance with the standard under which the product is produced.

2.1.4 Omitted

2.1.5 Omitted

2.1.6 Omitted

2.1.7 Omitted

2.1.8 Omitted

2.1.9 Omitted

2.1.10 Moldings

Moldings shall be of the pattern indicated and shall be of a grade compatible with the finish specified.

2.1.11 Omitted

2.1.12 Woodwork Items

2.1.12.1 Omitted

2.1.12.2 Omitted

2.1.12.3 Utility Shelving

Utility shelving shall be a suitable species equal to or exceeding requirements of No. 3 Common white fir under WWPA-01, 25 mm thick; or plywood, interior type, Grade A-B, 12.7 mm thick, any species group.

2.2 NAILS

Nails shall be the size and type best suited for the purpose and shall conform to ASTM F 547. Nails shall be hot-dip galvanized or aluminum when used on exterior work. For siding, length of nails shall be sufficient to extend 40 mm into supports, including wood sheathing over framing. Screws for use where nailing is impractical shall be size best suited for purpose.

PART 3 EXECUTION

3.1 OMITTED

3.2 OMITTED

3.3 OMITTED

3.4 MOLDING AND INTERIOR TRIM

Molding and interior trim shall be installed straight, plumb, level and with closely fitted joints. Exposed surfaces shall be machine sanded at the mill. Molded work shall be coped at returns and interior angles and mitered at external corners. Intersections of flatwork shall be shouldered to ease any inherent changes in plane. Window and door trim shall be provided in single lengths. Blind nailing shall be used to the extent practicable, and face nailing shall be set and stopped with a nonstaining putty to match the finish applied. Screws shall be used for attachment to metal; setting and stopping of screws shall be of the same quality as required where nails are used.

3.5 OMITTED

3.6 OMITTED

3.7 WOODWORK ITEMS

3.7.1 Omitted

3.7.2 Shelving

Shelving shall be anchored to supporting construction. Unless otherwise indicated, shelves shall be supported by wall-supported brackets not more than 600 mm on center or as required to limit deflection to 6 mm between supports with a load of 525 N per meter. Adjustable shelf hardware shall be steel standards, channel shaped, with 25 mm adjustment slots and brackets designed for attachment to standards.

3.7.3 Clothes Hanger Rods

Rods shall be provided where indicated and in all closets having hook strips. Rods shall be zinc-coated steel pipe 25.4 mm in diameter. Rods shall be set parallel with the front edges of the shelving, and shall be supported at each end by suitable sockets, and by intermediate brackets spaced at not more than 1200 mm centers.

TABLE I. SPECIES AND GRADE TABLES

Grading Rules	Species	Choice	Clear	C Select	C & Better
WWPA-01	Douglas Fir			X	
	Larch				X
	Hemlock Fir		X		
	Mountain Hemlock				X
	Western Larch		X		
	Idaho White Pine	X			
	Lodgepole Pine		X		
	Ponderosa Pine		X		
	Sugar Pine		X		
	Englemann Spruce		X		
	Douglas Fir South		X		
	Subalpine Fir		X		

NOTE 1: Under WWPA-01, Western Cedar shall be Grade A for trim.

NOTE 2: Interior trim shall be any one of the species listed above and the highest grade of the species for stain or natural finish and one grade below highest grade of species for paint finish.

END OF SECTION

SECTION 07240

EXTERIOR INSULATION AND FINISH SYSTEM

PART 1 GENERAL

1.1 REFERENCES

The publications listed below form a part of this specification to the extent referenced. The publications are referred to in the text by basic designation only.

AMERICAN SOCIETY FOR TESTING AND MATERIALS (ASTM)

ASTM B 117	(1994) Operating Salt Spray (Fog) Testing Apparatus
ASTM C 67	(1994) Sampling and Testing Brick and Structural Clay Tile
ASTM C 473	(1995) Physical Testing of Gypsum Board Products and Gypsum Lath
ASTM C 578	(1992) Rigid, Cellular Polystyrene Thermal Insulation
ASTM C 920	(1987) Elastomeric Joint Sealants
ASTM C 947	(1989) Flexural Properties of Thin-Section Glass-Fiber-Reinforced Concrete (Using Simple Beam With Third-Point Loading)
ASTM C 948	(1994) Dry and Wet Bulk Density, Water Absorption and Apparent Porosity of Thin Sections of Glass-Fiber-Reinforced Concrete
ASTM C 1149	(1990) Self-Supported Spray-Applied Cellulosic Thermal or Acoustical Insulation, or Both
ASTM D 968	(1993) Abrasion Resistance of Organic Coatings by Falling Abrasive
ASTM D 2394	(1983; R 1993) Simulated Service Testing of Wood and Wood-Base Finish Flooring
ASTM E 72	(1980) Conducting Strength Tests of Panels for Building Construction
ASTM E 84	(1995) Surface Burning Characteristics of Building Materials
ASTM E 96	(1994) Water Vapor Transmission of Materials
ASTM E 136	(1994) Behavior of Materials in a Vertical Tube Furnace at 750 Degrees C

ASTM E 330	(1990) Structural Performance of Exterior Windows, Curtain Walls, and Doors by Uniform Static Air Pressure Difference
ASTM G 23	(1995) Operating Light-Exposure Apparatus (Carbon-Arc Type) With and Without Water for Exposure of Nonmetallic Materials
ASTM G 53	(1993) Operating Light- and Water-Exposure Apparatus (Fluorescent UV-Condensation Type) For Exposure of Nonmetallic Materials

INTERNATIONAL CONFERENCE OF BUILDING OFFICIALS (ICBO)

ICBO-102S94	(1994) Uniform Building Code Standards Uniform Building Code, Vol. III

1.2 DESCRIPTION

The exterior insulation and finish system (EIFS) shall be a job-fabricated exterior wall covering consisting of insulation, reinforcing fabric, base coat, finish coat, and accessories. The system shall be the standard product of a manufacturer regularly engaged in furnishing exterior insulation and finish systems and shall be installed by an applicator approved by the system manufacturer. EIFS shall be polymer base, Class PB or cementitious, Class PM and shall be color as indicated and medium texture finish.

1.3 PERFORMANCE REQUIREMENTS

1.3.1 Test Specimens

Unless otherwise noted, the test specimens shall consist of reinforcement, base coat and finish coat applied in accordance with the manufacturer's printed recommendations to an insulation board common to the system. These test specimens shall be suitably sized for the apparatus used and be allowed to cure for a minimum of 28 days prior to testing.

1.3.2 Flame Spread

Flame spread test samples consist of base coat, fabric and finish coat, mounted on a non-combustible substrate. When tested in accordance with ASTM E 84, the samples shall have a flame spread rating of 25 or less.

1.3.2.1 Full Scale Wall Fire Test

Full scale wall fire test specimens shall include the complete system with no less than 100 mm of insulation. Test shall be performed in accordance with ICBO-102S94, Section 17-6. The specimen shall not contribute to significant or horizontal flame spread.

1.3.3 Omitted

1.3.4 Structural Performance Test

The system shall have been tested in accordance with ASTM E 330 to minimum positive and negative pressures of 2.2 KPa. Test panels shall be 1.2 m by 1.2 m minimum, consisting of the typical system assembly.

1.4 SUBMITTALS

Government approval is required for submittals with a "GA" designation; submittals having an "FIO" designation are for information only. The following shall be submitted in accordance with Section 01330 SUBMITTAL PROCEDURES:

SD-06 Instructions

Exterior Insulation and Finish System; FIO.

Two copies of manufacturer's standard printed instructions for installation of the system. Instructions shall include manufacturer's recommended details for corner treatment, jambs, sills, openings, joints and other special applications.

SD-08 Statements

Manufacturer's Approval and License; FIO.

Statement from manufacturer attesting that the applicator is approved and licensed to install the system.

SD-09 Reports

Exterior Insulation and Finish System; FIO.

Test reports indicating that the system complies with the specified performance tests. Tests shall be by an approved, independent testing laboratory.

SD-14 Samples

Exterior Insulation and Finish System; FIO.

Two samples of each exterior insulation and finish system. Each sample shall be 300 mm square, minimum, and shall be identical to the proposed installation in thickness, color, texture, insulation and workmanship.

1.5 DELIVERY AND STORAGE

Materials shall be delivered to the jobsite in their original unopened packages, clearly marked with the manufacturer's name, brand name, and description of contents. Storage shall be in accordance with the

manufacturer's recommendations in a clean, dry, well-ventilated area. Stored materials shall be protected from sunlight, and kept away from excessive heat. Coating materials which would be damaged by freezing shall be kept at a temperature not less than 4 degrees C. Insulation board shall not be exposed to flame or other ignition sources.

PART 2 PRODUCTS

2.1 EXTERIOR CEMENT BOARD

Exterior cement board shall be a non-combustible exterior grade portland cement product. Board shall be 1220 by 2440 mm with a minimum 13 mm thickness. Boards shall consist of an aggregated portland cement core faced on both surfaces and wrapped on long edges with an embedded polymer-coated glass fiber mesh. Bonding surface shall have rough texture. Exterior cement board shall comply with the following requirements:

Property	Test Method	Requirement
Flexural Strength	ASTM C 947	5 MPa, Min.
Compressive Strength	ASTM D 2394	8.6 MPa, Min.
Crack Resistance	ASTM E 72	No cracking
Non-combustibility	ASTM E 136	Pass
Flame Spread/Smoke	ASTM E 84	5/0 max.
Water Absorption	ASTM C 948	15 percent max.
Fastener Pull Resistance	ASTM C 473 (wet or dry)	534 N

2.2 ADHESIVE

Adhesive shall be the manufacturer's standard product, including primer as required, and shall be compatible with the substrate to which the system is applied.

2.3 INSULATION

Insulation shall conform to ASTM C 578, type as recommended by the system manufacturer and shall be compatible with other system components. Insulation shall be aged a minimum of 6 weeks by air drying, or equivalent prior to installation. Insulation shall be a standard product of the manufacturer and shall be factory marked with the manufacturer's name or trade mark, the material specification number, the R-value at 24 degrees C, and thickness. Thickness of insulation shall be based on specified R-value, but no single layer shall be less than 19 mm thick. Boards shall be marked individually. The thermal resistance of insulation in the system shall be not less than the R-value shown on the drawings. Insulation

for Class PM shall be restricted to a low water vapor permeability grade of extruded polystyrene (type IV or X).

2.4 BASE COAT

Base coat shall be the manufacturer's standard product and shall be compatible with the finish coat.

2.5 REINFORCING FABRIC

Reinforcing fabric shall be balanced, open weave, glass fiber fabric made from twisted multi-end strands specifically treated for compatibility with the other materials of the system.

2.6 MECHANICAL ANCHORS

Mechanical anchors shall be as recommended by the system manufacturer.

2.7 FINISH COATING

Finish coating shall be manufacturer's standard product, uniform in color and conforming to the following requirements. Specimens for tests shall have been cured for a minimum of 28 days.

TEST	METHOD	RESULTS
Abrasion Resistance	ASTM D 968	500 liters of sand-slight - smoothing - no loss of film integrity.
Accelerated weathering Light and water exposure	ASTM G 23 or ASTM G 53	2,000 hours. No deterioration
Mildew-fungus resistance	ASTM C 1149	Expose for 28 days at 95 percent RH, 32 degrees C temperature. No growth of mildew or fungus.
Salt spray resistance	ASTM B 117	Withstand 300 hours - No deleterious effects.
Water vapor	ASTM E 96	Not more than 13 grams per square meter an hour.
Absorption-freeze (Pre-weighed 100 mm by 200 mm specimens; 25 mm insulation, faced with finish coat cured and stored in air; tested with edges and back	ASTM C 67 50 Cycles: 20 hrs. at -9 degrees C; 4-hr. thaw in water	After 50 cycles - Total weight gain of not more an 6.2 grams. No checking, splitting, or cracking

open.)

2.8 SEALANT

Sealant shall meet requirements of ASTM C 920, Class 25, and shall be compatible with the finish system. Type, Grade, and Use shall be as recommended by both the sealant manufacturer and the system manufacturer. When required, primer, bond breaker and backstop shall be non-staining, and as recommended by the sealant manufacturer and the system manufacturer.

2.9 ACCESSORIES

Accessories shall conform to the recommendations of the system manufacturer and shall include trim, edging, anchors, sealant and filler rod required for proper installation of the system.

PART 3 EXECUTION

3.1 SURFACE PREPARATION

Surface shall be free of oil, loose materials or protrusions which will interfere with the system installation.

3.2 ENVIRONMENTAL CONDITION

Unless a higher temperature is required by the system manufacturer, the ambient air temperature shall be 4 degrees C or greater and rising at the time of installation of the system and shall be predicted to remain at 4 degrees C or greater for at least 24 hours after installation.

3.3 EXTERIOR CEMENT BOARD

Exterior cement board shall be attached to metal studs with self-tapping wafer-head, corrosion resistant screws, nailed to wood studs, or secured to concrete or masonry with approved fasteners. Screws and nails for application of the board shall be spaced not more than 200 mm on each supporting member, and fasteners into concrete or masonry shall be spaced not more than 300 mm apart horizontally and vertically. Fasteners shall be more closely spaced when required for negative wind load resistance. Edges and ends of boards shall be butted snugly with vertical joints staggered to provide full and even support for the insulation.

3.4 INSULATION BOARD AND REINFORCING FABRIC

Unless otherwise specified by the system manufacturer, insulation boards shall be placed horizontally from a level base line. Vertical joints shall be staggered and insulation boards interlocked at corners. Joints of insulation shall be butted tightly. Surfaces of adjacent insulation boards shall be flush at joints. Joints of insulation shall be offset from substrate joints. Reinforcing glass fabric shall be installed in accordance with the manufacturer's instructions.

3.5 ADHESIVE SYSTEM

Primer (if required by the manufacturer) and adhesive shall be prepared and applied with a stainless steel trowel to substrate in accordance with the manufacturer's instructions. The pattern of the reinforcing fabric shall not be visible. Adhesive used with Class PM must be supplemented with mechanical fasteners. Adhesive shall be used without fasteners only with Class PB system and when recommended by the manufacturer.

3.6 BASE COAT

Base coat shall be mixed in accordance with the manufacturer's instructions and applied to insulated wall surfaces, trowelling the material into the reinforcing fabric in a tight coat and doubling back to provide complete coverage of the reinforcing fabric, panel joints and fasteners. Base coat may be used to level out surface areas when permitted by the manufacturer.

3.7 FINISH COATING

Finish coating shall be applied and leveled in one operation. Final texture shall be obtained by trowels, floats, or by spray application as necessary to achieve the required finish. Finish surfaces shall be plane, with no deviation greater than 6 mm when tested with a 3 m straightedge.

3.8 SEALANT

Edges of the exterior insulation and finish system shall be sealed at openings as recommended by the system manufacturer.

END OF SECTION

This page intentionally blank

SECTION 07250

SPRAY-APPLIED FIREPROOFING

PART 1 GENERAL

1.1 REFERENCES

The publications listed below form a part of this specification to the extent referenced. The publications are referred to in the text by basic designation only.

AMERICAN SOCIETY FOR TESTING AND MATERIALS (ASTM)

ASTM E 119	(1988) Fire Tests of Building Construction Materials
ASTM E 605	(1993) Thickness and Density of Sprayed Fire-Resistive Material (SFRM) Applied to Structural Members
ASTM E 736	(1992) Cohesion/Adhesion of Sprayed Fire-Resistive Materials Applied to Structural Members
ASTM E 759	(1992) Effect of Deflection on Sprayed Fire-Resistive Material Applied to Structural Members
ASTM E 760	(1992) Effect of Impact on Bonding of Sprayed Fire-Resistive Material Applied to Structural Members
ASTM E 937	(1993) Corrosion of Steel by Sprayed Fire-Resistive Material (SFRM) Applied to Structural Members
ASTM E 1042	(1992) Acoustically Absorptive Materials Applied by Trowel or Spray
ASTM G 21	(1990) Determining Resistance of Synthetic Polymeric Materials to Fungi

UNDERWRITERS LABORATORIES (UL)

UL-05	(1993; Supple) Fire Resistance Directory
UL 263	(1992) Fire Tests of Building Construction and Materials

1.2 SUBMITTALS

Government approval is required for submittals with a "GA" designation; submittals having an "FIO" designation are for information only. The following shall be submitted in accordance with Section 01330 SUBMITTAL PROCEDURES:

SD-01 Data

Fireproofing Material; GA.

Data identifying performance characteristics of fireproofing material. Data shall include recommended application requirements and indicate thickness of fireproofing that must be applied to achieve each required fire rating.

SD-09 Reports

UL Test Assembly; FIO.

Reports and test records, attesting that the fireproofing material conforms to the specified requirements. Each test report shall conform to the report requirements specified by the test method.

Field Tests; FIO.

Test reports documenting results of tests on the applied material in the project. Report shall include defects identified, repair procedures, and results of the retests when required.

SD-13 Certificates

Installer Qualifications; FIO.

Manufacturer's certification that each listed installer is qualified and trained to install the specified fireproofing. Evidence that each fireproofing installer has had a minimum of 3 years experience in installing the specified type of fireproofing.

Surface Acceptability; FIO.

Manufacturer's certification that surfaces to be protected have been inspected and are acceptable to receive spray-applied fireproofing. The statement shall list the structural members and the areas that have been inspected and certified.

Manufacturer's Inspection; FIO.

Manufacturer's certification that the spray-applied fireproofing in the entire project complies with the manufacturer's criteria and recommendations.

SD-14 Samples

Spray-Applied Fireproofing; FIO.

One sample panel, 450 mm square, for each specified type of fireproofing. Also, a designated sample area of not less than 9 square meters shall be prepared. Sample area shall be representative of typical installation of fireproofing including metal decks, beams, columns and attachments. Equipment, materials and procedures used in the sample area shall be the same as, or representative of that to be used in the work. The sample area shall be approved prior to proceeding with fireproofing work in any other area. The approved sample area shall be used as a reference standard for applied fireproofing material. Sample area shall remain in place and open to observation until all spray-applied fireproofing is completed and accepted, at which time it may become part of the work.

1.3 DELIVERY AND STORAGE

Packaged material shall be delivered in the original unopened containers, marked to show the names of the brand and the manufacturer. Fireproofing material shall be kept dry until ready to be used, and shall be stored off the ground, under cover and away from damp surfaces. Damaged or opened containers will be rejected. Material with shelf-life shall be applied prior to expiration of the shelf-life.

1.4 ENVIRONMENTAL CONDITIONS

1.4.1 Temperature

Substrate and ambient air temperatures shall be maintained above 4 degrees C during application and for 24 hours before and after application. Relative humidity shall be maintained within the limits recommended by the fireproofing manufacturer.

1.4.2 Ventilation

Adequate ventilation shall be provided to properly dry the fireproofing after application. In enclosed areas, a minimum of four air exchanges per hour shall be provided by forced air circulation.

1.5 INSTALLER QUALIFICATIONS

Each installer of fireproofing material shall be trained and have a minimum of 3 years experience in the installation of fireproofing of the type specified.

1.6 MANUFACTURER'S SERVICES

The manufacturer or his representative shall be onsite prior to, periodically during, and at completion of the application, to provide the specified inspections and certifications; and to ensure that preparations are adequate and that the material is applied according to manufacturer's recommendations and the contract requirements.

1.7 FIRE RESISTANCE RATING

Fire resistance ratings shall be in accordance with the fire rated assemblies listed in UL-05. Proposed materials not listed in UL-05 shall have fire resistance ratings at least equal to the UL-05 ratings as determined by an approved independent testing laboratory based on tests specified in UL 263 or ASTM E 119.

1.8 EXTENT OF FIREPROOFING

All structural steel, and the underside of steel floor and steel roof decks shall be protected with spray-applied fireproofing to a fire resistance hour-rating as indicated.

PART 2 PRODUCTS

2.1 SPRAY-APPLIED FIREPROOFING

Spray-applied fireproofing material, including sealer, shall conform to ASTM E 1042, Class (a), Category A, either Type I or Type II, except that the dust removed shall not exceed 0.027 gram per square meter of fireproofing material applied as specified in the project. Material shall be asbestos free, and shall resist fungus for a period of 28 days when tested in accordance with ASTM G 21.

2.1.1 Dry Density and Cohesion/Adhesion

Fireproofing shall have a minimum ASTM E 605 dry density and ASTM E 736 cohesion/adhesion properties as follows:

2.1.1.1 Concealed Structural Components

Fireproofing for structural components concealed above the ceiling, or within a wall, chase, or furred space, shall have a minimum average applied dry density of 240 kg per cubic meter and a cohesion/adhesion strength of 9.57 kPa (200 pounds per square foot).

2.1.1.2 Exposed Structural Components

Fireproofing for exposed structural components, except where otherwise specified or indicated, shall have a minimum applied dry density of 350 kg per cubic meter and a cohesion/adhesion strength of 14.36 kPa.

2.1.1.3 Mechanical Rooms and Storage Areas

Fireproofing for structural components located in mechanical rooms and storage areas shall have a minimum applied dry density of 640 kg per cubic meter and a cohesion/adhesion strength of 19.15 kPa.

2.1.2 Deflection

Spray-applied fireproofing shall not crack, spall, or delaminate when tested in accordance with ASTM E 759.

2.1.3 Bond-Impact

Spray-applied fireproofing material shall not crack, spall or delaminate when tested in accordance with ASTM E 760.

2.1.4 Compressive Strength

The minimum compressive strength shall be 48 kPa when tested in accordance with ASTM E 759.

2.1.5 Corrosion

Spray-applied fireproofing material shall not contribute to corrosion of test panels when tested as specified in ASTM E 937.

2.2 SEALER

Sealer shall be the type approved by the manufacturer of the fireproofing material and shall be white or green color.

2.3 WATER

Water used for material mixing and surface preparation shall be potable.

PART 3 EXECUTION

3.1 SURFACE PREPARATION

Surfaces to be fireproofed shall be thoroughly cleaned of dirt, grease, oil, paint, loose rust, rolling lubricant, mill scale or other contaminants that will interfere with the proper bonding of the sprayed fireproofing to the substrate. Overhead areas to be fireproofed shall be cleared of all obstructions interfering with the uniform application of the spray-applied fireproofing. Hardware such as support sleeves, inserts, clips, hanger attachment devices and the like shall be installed prior to the application of the fireproofing. Condition of the surfaces shall be acceptable to the manufacturer prior to application of spray-applied fireproofing. Applications listed for use on primed surfaces shall be coordinated with the manufacturer and detailed in submittal item SD-01 Data.

3.2 PROTECTION

Surfaces not to receive spray-applied fireproofing shall be covered to prevent contamination by splatter, rebound and overspray. Exterior openings in areas to receive spray-applied fireproofing shall be covered prior to and during application of fireproofing with tarpaulins or other approved material. Surfaces not to receive fireproofing shall be cleaned of fireproofing and sealer.

3.3 MIXING

Fireproofing material shall be mixed in accordance with the manufacturer's recommendations.

3.4 APPLICATION

3.4.1 Sequence

Prior to application of fireproofing on each floor, the manufacturer shall inspect and approve application equipment, water supply and pressure, and the application procedures. Fireproofing shall be applied to underside of steel roof deck or steel floor assemblies only after respective roof or floor construction is complete. Fireproofing material shall be applied prior to the installation of ductwork, piping and conduits which would interfere with uniform application of the fireproofing. No roof traffic shall be allowed during application and curing period.

3.4.2 Application Technique

Water pressure and volume shall be maintained to manufacturer's recommendations throughout the fireproofing application. Fireproofing material shall be applied to the thickness established for the specified fire resistance rating, in accordance with the procedure recommended by the manufacturer, and to a uniform density and texture. Fireproofing material shall not be tamped to achieve the desired density. Sealer shall be applied to all fireproofing.

3.5 FIELD TESTS

The applied fireproofing shall be tested in approved locations for density, and cohesion/adhesion force as specified, and for thickness in accordance with ASTM E 605, by an approved independent testing laboratory. Two sets of tests shall be conducted on each floor or 930 square meter area, whichever is less, at the approved locations. Any area showing less than minimum requirements shall be rejected and corrected. Proposed corrective measures, in writing, shall be approved before starting the corrective action. Corrected work shall be retested.

3.5.1 Thickness, Density, Cohesion/Adhesion

Each structural component type shall be tested at floor decks, beams, and columns. Minimum average thickness shall be as required by UL-05. Density and cohesion/adhesion shall be as specified.

3.5.2 Repair

Additional fireproofing material may be added to provide proper thickness. Rejected areas of fireproofing shall be corrected to meet specified requirements by adding fireproofing material to provide the proper thickness, or by removing defects and respraying with new fireproofing material. Repairs shall use same type of fireproofing material as originally applied. Repaired areas shall be retested and reinspected. Fireproofing material shall be applied to voids or damaged areas by hand-trowel, or by respraying.

3.5.3 Manufacturer's Inspection

The manufacturer shall inspect the fireproofing work after the work is completed on each floor or area, including testing, repair and cleanup, and shall certify that the work complies with the manufacturer's criteria and recommendations. Before the sprayed material is covered, and after all of the fireproofing work is completed, including repair, testing, and cleanup; and after mechanical, electrical and other work in contact with fireproofing material has been completed, the manufacturer shall reinspect the work and certify that the entire project complies with the manufacturer's criteria and recommendations.

END OF SECTION

This page intentionally blank

SECTION 07411

STANDING SEAM METAL ROOFING (SSMR)

PART 1 - GENERAL

1.1 DESCRIPTION OF WORK

1.1.1. Furnish the administration, facilities, materials, labor, equipment, and quality control (QC) necessary to integrate the work into the total building system so that leakage of the standing seam metal roofing (SSMR) system or the building does not occur. The SSMR system is an assembly of components that include the metal roof panels, supporting structure, metal flashings, shaped metal trim, metal ridge caps, fascia panels, fascia support structure, soffits, soffit support structure, and all related parts necessary to complete the assembly. The SSMR manufacturer is the metal roof panel manufacturer, and shall also manufacture and market the other components of the roofing system. The manufacturer, or his licensed/approved installer, shall complete the work and provide a material and labor warranty for a twenty-year period from the date of final acceptance of the building. The 20-year warranty submitted to the Government (Submittal #4) shall be signed by the SSMR manufacturer and provided to the Contracting Officer prior to final acceptance.

1.1.2. QC procedures, tolerances, testing, and requirements are specified in these contract documents. Nonconforming work will be rejected as a violation of these specifications.

1.1.3. The work to be performed under this section shall include, but is not limited to, the following:

1.1.3.1. Furnish all labor, material, and equipment necessary to selectively remove the aggregate surfaced built-up roof system including the membrane, insulation, flashing systems, underlayment, vapor barrier, wood nailers and blocking, and equipment curbs as necessary to install the supporting structure for the standing seam metal roofing system.

1.1.3.2. Furnish all qualified supervision, experienced labor, materials, tools, and equipment required or necessary to complete in an acceptable manner the specified SSMR system in accordance with this specification with the application in strict accordance with the latest written “Contractor Application Instructions” as supplied by the manufacturer.

1.1.3.3. Furnish materials and labor as specified in other sections of these specifications which directly relate to this section.

1.2. QUALITY CONTROL (QC)

1.2.1. As specified herein, the Contractor will provide the evidence needed to establish confidence that quality control (QC) is being performed adequately.

1.2.2. Except as modified and supplemented herein, follow the published requirements and written recommendations of the SSMR manufacturer and other material manufacturers. Concerning methods of installation, industry practices apply only when this contract does not address the matter.

1.2.3. The specified QC requirements are minimums. The Contractor shall provide additional QC if, in the opinion of the Contracting Officer, the QC is not effective enough to provide conforming work. This additional QC does not constitute a change to the contract.

1.2.4. The QC is subject to audit by a Government inspector and the Contractor shall provide all information necessary for the audit.

1.2.4.1. The Government is not obligated to inspect a Contractor's work nor to protect a Contractor from the consequences of malperformance of his work force. Government inspection is a general examination of the Contractor's conduct and work, and is solely for the purposes of the Government. Government inspectors do not have the authority to accept any work, whether it be conforming or not. Government inspection is not to be construed as conclusive. Information that may be offered to the Contractor does not change the contract.

1.2.4.2. Government agents, including inspectors, engineers, and quality assurance evaluators, are not authorized to change the contract without the written authorization of the Contracting Officer. This lack of authority extends to all situations in which the actions of these agents could be construed as constituting a change.

1.2.5. Provide Quality Control (QC) as follows:

1.2.5.1. Quality Control is the regulatory process by which the Contractor measures actual quality performance, compares it with standards, and acts on the differences. The QC function is the entire collection of activities through which fitness for use is achieved.

1.2.5.2. Contractor inspection is a careful and critical investigation of all work to verify that it conforms to the contract, and to detect variances and act to correct them in time to prevent reworking and delay. On discovery of variance, the Contractor will immediately institute corrective action and ensure all future work conforms to the requirements of the contract.

1.2.5.3. The Contractor shall hire or appoint a representative to act as Quality Controller. The quality controller is to have at least five (5) years experience in the supervision and installation of standing seam metal roofing systems, and his/her only function shall be QC.

1.2.5.4. Before the start of roofing work, the Contracting Officer will schedule a preconstruction conference at Malstrom Air Force Base to review the contract. The Quality Controller and foreman or superintendent must attend the conference. Technical representative from the SSMR manufacturer and manufacturers of other roofing products shall also attend the preconstruction conference. These representatives shall be knowledgeable in the installation peculiarities and compatibility of their products. Contractor and technical representatives will present oral and documented installation procedures to be used. This conference may include a visit to the work site.

1.2.5.5. Basic QC requirements appear in Part 4 of these specifications. As a minimum, the Quality Controller shall perform each of the actions listed on a daily basis. Failure to perform these actions constitutes failure to perform and entitles the Government to terminate the Contractor for default.

1.3 SUBMITTALS

1.3.1. Submit requests for all changes in writing. Do not proceed with any changes without written authorization from the Contracting Officer. In addition, all proposed deviations from the contract shall be

noted on the transmittal, AF Form 3000. If these conditions are not met, the submittal shall be returned to the Contractor for corrective action. The adequacy and accuracy of submittals and their compliance with contract documents are the responsibility of the Contractor.

1.3.2. Approvals of submittals which do not conform to the contract shall not be construed as a change unless such nonconformance is a change that is specifically so indicated on the submittal and approved by the Contracting Officer.

1.3.3 Approvals of alternate type SSMR components shall not relieve the Contractor from providing the added requirements specified herein unless those requirements are specifically exempted on the submittal approval form and the exempted requirements are approved or recommended in writing by the manufacturer.

1.3.4. Submittals 1 through 6 are included at the end of this specification and additional submittal forms shall be obtained from the Contracting Officer.

1.3.4.1. Submittal #1: The SSMR System Manufacturer's Certification. This submittal must be submitted and be accepted by the Contracting Officer prior to execution of any roofing work.

1.3.4.2. Submittal #2: System Summary Sheet. This must be signed by both the Contractor and the SSMR manufacturer, and submitted to the Contracting Officer no later than 30 calendar days after contract award. This document is tailored to present project requirements to the system manufacturer who can then ascertain the technical aspects of the project and the acceptability of the design to their 20-year warranty.

1.3.4.3. Submittal #3: Designation of Roofing Quality Control Controller. The most effective means to evaluate quality installation is by thorough, continuous visual examination at the time of installation, conducted by a person who is knowledgeable in roofing technology and good workmanship practices. The Contractor shall designate a person to be in charge of roofing quality control. The quality controller shall have at least five (5) years experience in the supervision and inspection of SSMR systems and shall not be a principal or officer of the roofing contractor's company. The Government inspector will audit the quality control process on a daily basis. The Contractor must furnish Submittal #3 as required herein, modified as necessary, to identify the person in charge of roofing quality control. This submittal must be approved by the Contracting Officer prior to execution of any roofing work.

1.3.4.4. Submittal #4: The Air Force Standing Steam Metal Roofing System 20-Year Labor and Material Warranty. The manufacturer shall provide an executed copy of the 20-year warranty (Attachment #4) upon satisfactory completion of the roofing system. The warranty is to be provided to the Contracting Officer prior to final acceptance of the project.

1.3.4.5. Submittal #5: Sample Identification. Use Attachment #4 for this submittal.

1.3.4.6. Submittal #6: As-Built Roof Summary. The Contractor shall submit this summary upon completion of the project.

1.3.5. Materials Approval: Within thirty (30) days after award of contract, the Contractor shall submit, to the Contracting Officer, certifications from the systems manufacturers/suppliers that the materials to be used conform to specified standards as applicable to produce the SSMR manufacturer's 20-year warranted system.

1.3.6. Before start of work, the Contractor shall submit:

1.3.6.1. Evidence that the approved materials have been ordered.

1.3.6.2. Four copies of:

1.3.6.2.1. Latest editions of the SSMR manufacturer's published general requirements, technical literature, repair instructions, and material safety data sheets (MSDS) for each system to be used in this contract.

1.3.6.2.2. Shop drawings for approval prior to starting construction. Shop drawings shall also be approved by the manufacturer and include the following:

1.3.6.2.2.1. Outline of each roof area and roof area size.

1.3.6.2.2.2. Locations and types of all penetrations, vents, and curbs.

1.3.6.2.2.3. Recommended layout of metal panel sheets.

1.3.6.2.2.4. Recommended flashing system details.

1.3.6.2.2.5. Recommended support structure layout and details.

1.3.6.2.2.6. Recommended support structure-to-roof deck connection details.

1.3.6.2.3. Shop drawings which address any and all changes in roof details shown on the contract drawings.

1.3.6.2.4. Latest editions of all other material manufacturer's product and installation literature.

1.3.7. Panel Lots and Samples:

Factory certified test certificates for each lot of metal roofing panels installed shall be furnished along with two samples, 300 mm long, on receipt at the job site. For this purpose, a "lot" shall be considered one shift (6 or 8 hours) of production. Production harts will be retained for 2 years for each lot produced and shall be made available for inspection in the event of panel failure. Internal laboratory test records for specific gravity, tensile strength, elongation, and rheology shall be retained for each lot for a 2-year period and shall be made available for inspection in the event of panel failure.

1.3.8. Submit a daily QC Record, AF Form 1063. Obtain blank forms from 341st Civil Engineer Squadron, Engineering Flight.

1.3.9. Before final acceptance, submit:

1.3.9.1. A plan view drawing of each roof showing the location and dates of installation for each lot of metal roof panels, as identified by the manufacturer's lot number.

1.3.9.2. 20-Year Warranty Certification (Submittal #4). The Contractor shall be responsible for notifying the manufacturer of the roofing schedule and arranging for a representative to be on site as required by the warranty.

1.3.9.3. As-Built Roof Summary (Submittal #6).

1.3.10. Before start of work, the Contractor shall submit, for approval, samples of all other roof system components to be used in the construction. These components include, but are not limited to: flashing,

trim, closures, ridge caps, fasteners, two-piece concealed panel clips, gaskets, sealants, roof vent extensions, and weatherheads.

1.4. ACCEPTANCE OF COMPLETED WORK

1.4.1. Acceptance of completed work will be based on its conformance to this contract. Nonconforming work may be rejected; the Government is not obligated to accept nonconforming work at a reduced price. The Government will assign the roof areas to the Contractor as they are specifically cleared for Contractor access by the Contracting Officer. The Contractor will be prohibited from starting work in a new area until previous work conforms to specification requirements. Unacceptable work shall be reaccomplished within tolerances prior to the Contractor continuing work in the assigned area. The Contractor shall start replacement or correction of rejected work within ten (10) calendar days after receipt of the rejection notice; otherwise, the Government may have this work done by others and charge the cost to the Contractor. An inadequate QC program is considered nonconforming work.

1.4.2. A signed final acceptance certificate by the Contracting Officer issued to the Contractor is the only and final acceptance under the Inspection of Construction clause of this contract.

1.5. DELIVERY, STORAGE AND HANDLING

1.5.1. Deliver panels and other components so that they will not be damaged or deformed. Package roof panels for protection against transportation damage.

1.5.2. Exercise care in unloading, storing, and erecting roof panels to prevent bending, warping, twisting, and surface damage.

1.5.3. Stack materials on platforms or pallets, covered with tarpaulins or other suitable weathertight ventilated covering. Store metal roof panels so that they will not accumulate water. Do not store panels in contact with other materials that might cause staining, denting, or other surface damage.

1.6. SYSTEM PERFORMANCE REQUIREMENTS

1.6.1. Metal Roofing Panels:

1.6.1.1. 300 mm minimum and 610 mm maximum panel width from seam to seam.

1.6.1.2. .58 mm minimum bare metal thickness.

1.6.1.3. 50 mm minimum rib height; the rib height shall be determined by measuring the vertical distance between the base of the flat portion (the pan) of the panel and the top of the rib (or seam) in the installed panel configuration.

1.6.2. Fasteners: The fasteners listed below shall be the required minimum strength for the connecting condition described. If fastener types other than those listed below are used, they shall be shown by tests to be equal in holding strength (both pull-out and shear strengths) to the listed fasteners. If fasteners do not achieve a minimum holding strength of 340 when connected to steel, the fastener size or the connecting material thickness or strength shall be increased until the minimum holding strengths are achieved.

1.6.2.1. Screws shall not be less than No. 14 diameter if self-tapping type and not less than No. 12 diameter if self-drilling and self-tapping type.

1.6.2.2. If screws strip during installation, they shall be replaced with the next larger size screw of the same type or with a bolt equal in size to the stripped fastener.

1.6.2.3. 6 mm diameter bolts with appropriate washers and nuts may be used in lieu of the screw fasteners given above.

1.6.3. Hold-Down Clips:

1.6.3.1. Two fasteners shall be used to connect hold-down clips to the structural members below.

1.6.3.2. Hold-down clips shall be capable of allowing for full anticipated thermal movement. The clips shall be positioned at the time of installation with due consideration of the ambient temperature in relation to the temperature range expected during the lift of the roofing system.

1.6.4. Gravity design loads for the roofing panels and for the subpurlins, or panel support system, shall be the sum of the actual dead load and a vertical live load of 146 kgs/sq meter.

1.6.5. Maximum deflections under the applied gravity vertical live load shall not exceed those listed below. Deflections shall be based on the member being continuous across two or more supports, unfastened, and free to rotate.

Roofing Panels: 1/180 of the span

Subpurlins, or Panel Support Beams: 1/180 of the span

1.6.6. Resistance to Wind Uplift: The standing seam metal roof system components shall be from a single, tested roof deck construction system listed in the Underwriters' Laboratories, Inc., "Building Materials Directory for Class 90 Wind Uplift." The standing seam metal roof system as installed shall be essentially the same as the UL tested system except as modified by requirements of the roofing system manufacturer to accommodate the specifics of this project. The roof system installed shall be structurally equivalent to the UL Class 90 tested system with regard to its capacity to resist wind uplift. The Contractor shall design the primary structural supporting members of the building (as indicated on the contract drawings) adequate to withstand the metal roof system and need consider those primary supporting members only as required for connection of the standing seam metal roof system to the supporting structural members.

1.6.7. Other Components: Connection devices which are used by the manufacturer as "standard" edge connections at gables, ridges, eaves, etc., must resist wind upload forces. Edge connection devices shall have wind uplift resistance equal to the hold-down clips proposed for use in the roof area adjacent to the edge connector. For devices with movable components, tension pull tests shall be performed in the installed condition of the edge connector that is least resistant to wind uplift. The tests shall be performed only if certified manufacturer test results for prior installed standing seam metal roof systems cannot be obtained.

PART 2 - PRODUCTS

2.1. MANUFACTURERS

2.1.1 Refer to U.S. Army Corps of Engineers list below

CEMP-ET 8 June 1995

U.S. ARMY CORPS OF ENGINEERS LIST OF APPROVED STANDING SEAM METAL ROOF SYSTEMS (IAW CEGS-07416)

SYSTEM NAME	PANEL SPAN (mm)	WIDTH (mm)	THICKNESS(mm)	DESIGN LOAD BASED ON DEFORMATION (kgs/sq meter)	DESIGN LOAD BASED ON FAILURE (kgs/sq meter)	MANUFACTURER	DATE OF APPROVAL
MR-24	1549 774	610	.61-.76 .61-.76	168.9-341.2 262.7-261.5	165-313 288.1-537.6	Butler Co.	02-13-92
VSR	1549 774	406	.61 .61	177.7 321.8	191.4 323.2	Butler Co.	07-22-92
CRP-16	1549 774	406	.61 .61	205.1 375.0	189.4 326.2	CECO	10-01-92
SEAM-LOC 24	1524 762	610	.61 .61	156.7 228.5	157.2 232.4	Metal Sales Manuf. Co.	11-23-92
BattenLok	1524762	406	.61 .61	187.5 214.3-287.1	156.3 211.4-342.3	MBCI	12-14-92
StarShield	1524	610	610	234.4	251.3 276.8	Star Bldg Systems	02-05-93

	762		610	351.5			

Shur-Lok	1524 1219 762 508	610 610 610 610	.61.61.61.61	-- -- -- --	209 245.6 390.6414.5	Gulf States Manuf. Co.	06-16-93
VP SSR	1524 762 508	610610610	.61-.76 .61-.76 .61-.76	214.8-332 351.5-468.7 781.2	200.2-263.7 317.4-415 615.2	Varco-Pruden Buildings	06-28-93
264FL	1524 762	406406	.61.61	250 429.7	196.8 388.4	Steelox Roofing Sys	07-01-93
Remarks				*see test results			

Notes: 1. Test load with safety factor of 1.3 applied.

2. Test load with safety factor of 1.65 applied.

U.S. ARMY CORPS OF ENGINEERS

LIST OF APPROVED STANDING SEAM METAL ROOF SYSTEMS

(IAW CEGS-07416)

SYSTEM NAME	PANEL SPAN (mm)	WIDTH (mm)	THICKNESS (mm)	DESIGN LOAD BASED ON DEFORMATION (kgs/sq meter)	DESIGN LOAD BASED ON FAILURE (kgs/sq meter)	MANUFACTURER	DATE OF APPROVAL
U/R/S-16	1524762	406	.61	271.1 503.6	213.4 396.8	Ultra Roof Inc.	08-04-93
Double-Lok	1524 762 1524 762 1524 762	61061045 74573053 05	.61 .61 .61 .61 .61 .61	212.4 314 269 376.4 338.1 474.8	167.3 247.3 212 296.6 318.7 427.9	MBCI	08-12-93

Span-Lok	1524 762 1524 762	40640645 7457	.61 .61 .61 .61	287.6 450.2 172.8 366.2	219.2 354.7 136.2 288.5	AEP-SPAN	10-01-93
Loc-Seam	1524 762	406406	.61 .61	201.2-210.9 308.6-585.9	166-180.2 273.9-146.4	Amer Bldg Co.	10-22-93
KPI RoofLok	1524 762	406406	.61 .61	178.7 490.8	140.8 386.7	KOVACH	10-26-93
Stand'n Seam	1524 762	406406	.61 .61	431.9 593.4	340.3 467.5	FABRAL/Alcan Bldg Product	01-12-94
Remarks				*see test results			

Notes: 1. Test load with safety factor of 1.3 applied.

2. Test load with safety factor of 1.65 applied.

U.S. ARMY CORPS OF ENGINEERS

LIST OF APPROVED STANDING SEAM METAL ROOF SYSTEMS

(IAW CEGS-07416)

SYSTEM NAME	PANEL SPAN (mm)	WIDTH (mm)	THICKNESS (mm)	DESIGN LOAD BASED ON DEFORMATION (kgs/sq meter)	DESIGN LOAD BASED ON FAILURE (kgs/sq meter)	MANUFACTURER	DATE OF APPROVAL
SA 16 x 2	1524 762 1524 762 1524 762 1524 762 1524 762 1524 762	4064064064063053053053053061061061061061091491414	.61 .61 .61 .61 .61 .61 .76 .76 .61 .61 .76 .76 .61/.45 .61/.45	-- -- -- -- --	151.8 308.6 228 343.7 302.2 422.8 375 565.9 148.4 194.3 216.8 287.6 290.5 410.6	Carlisle Engineered Metals, Inc.	03-10-94
AP 12x 1.75				-- -- --			03-10-94

VERSALOK SSP 200				-- -- -- -- -- -- --			03-10-94 03-10-94
ZIP RIB (Aluminum)	1524 762	305305	1.02 1.02	-- --	325.7 562.5	Merchant & Evans, Inc.	03-31-94
SRS-1.5	1524 762	457457	.76 .76	336.9 507.8	268.5 449.2	Smith Stellite	04-25-94
VicLoc 324	1549 774 774	610610610	.61 .61 .76	214.8-307.2 273.4-488.2 480.4-539	169.4-238.8 215.3-384.7 384.4-424.8	VicWest Steel	07-21-94
Remarks				*see test reslts			

Notes: 1. Test load with safety factor of 1.3 applied.

2. Test load with safety factor of 1.65 applied.

U.S. ARMY CORPS OF ENGINEERS

LIST OF APPROVED STANDING SEAM METAL ROOF SYSTEMS

(IAW CEGS-07416)

SYSTEM NAME	PANEL SPAN (mm)	WIDTH (mm)	THICKNESS (mm)	DESIGN LOAD BASED ON DEFORMATION (kgs/sq meter)	DESIGN LOAD BASED ON FAILURE (kgs/sq meter)	MANUFACTURER	DATE OF APPROVAL
Ultra Seam US-200S	1524 762 1524 762	30530540 6406	1.02 Alum 1.02 Alum .61 .61	214.8 390.6 211.4 336.9	169.3 307.7 166.6 274.3	Architectural Metal Products, Inc.	08-03-94
Design Span 12”	1524 762	305305	.61 .61	230.9 275.9	182 217.4	BHP Steel Products U.S.A., Inc.	11-28-94
BR - 24	1219 774	406406	.61 .61	224.1 312.5	192.4 246.1	Berics Corp.	01-05-95

Span-Lok	15247621524762	406406457457	.76 .76 .76 .76	300.4 600.9 208.3 532.5	238.3 473.1 164.1 419.6	AEP-SPAN	02-06-95
Double-Lok	152476215247621524762	6106104574573053 05	.76 .76 .76 .76 .76 .76	221 396.7 340.1 459.2 397.4 553.7	224.9 312.6 268 496.5 377.7 574.7	MBCI	02-08-95
Zee Lock	1219610	406406	.61 .61	341.8 429.7	269.5 340.3	Berridge Manuf. Co.	02-14-95
Remarks				*see test results			

Notes: 1. Test load with safety factor of 1.3 applied.

2. Test load with safety factor of 1.65 applied.

U.S. ARMY CORPS OF ENGINEERS

LIST OF APPROVED STANDING SEAM METAL ROOF SYSTEMS

(IAW CEGS-07416)

SYSTEM NAME	PANEL SPAN (mm)	WIDTH (mm)	THICKNESS (mm)	DESIGN LOAD BASED ON DEFORMATION (kgs/sq meter)	DESIGN LOAD BASED ON FAILURE (kgs/sq meter)	MANUFACTURER	DATE OF APPROVAL
Lock-Seam	1524 762	406406	.61 .61	175.8 410.1	153.8 429.7	American Bldg Co.	03-07-95
Stand'n Seam (Aluminum)	1524 762	406406	.81 .81	300.5 413.2	236.7 325.5	FABRAL	06-05-95
MRD110 (Aluminum)	1219 762	279279	1.02 1.02	273.4 390.6	215.4 307.7	ATAS Alum. Corp.	06-08-95
Remarks				*see test results			

Notes: 1. Test load with safety factor of 1.3 applied.

2. Test load with safety factor of 1.65 applied.

2.2 MATERIALS

2.2.1. Metal Roof Panels:

2.2.1.1. Panels shall be coil-coated and color-finished as specified herein, and shall have configurations designed for mechanically formed seams for securing adjacent sheets. The system for securing the roof covering to structural framing members shall be concealed clip fastening system with nonpenetrating fasteners. The ridge shall not have exposed fasteners. Sealant for the standing seams shall be factory applied. Length of sheets shall be sufficient to cover the entire length of any unbroken roof slope. Sheets shall be square-cut, except gable wall sheets or hip sheets may be cut in the shop to correspond to the roof slope. Panels shall be fabricated of zinc-coated steel conforming to ASTM A 446-91, G90 coating designation; aluminum-zinc alloy-coated steel conforming to ASTM A 792-89 with AZ-50 coating designation, Grade 40 or to suit the manufacturer's standards; or aluminum-coated steel conforming to ASTM A 463-88 with T1-40 and Mil Spec MIL-S-4174, Type II. The nominal thickness of the steel sheets prior to forming and coating shall be .61 mm or thicker.

2.2.1.2. Factory Color Finish: Roof panels shall have a factory color finish on the exposed side. The exterior finish shall consist of either a synthetic resin base coating applied to a cleaned, pretreated, and primed surface, or a dry-film coating bonded by adhesive to a cleaned metal substrate. Color shall be Federal No. 37056. The dry film thickness of the exterior coating shall be not less than .02 mm , exclusive of the primer. The interior color finish shall consist of the same coating and dry film thickness as the exterior or backer coat with a dry film thickness of .01 mm . The exterior color finish shall meet the test requirements specified below. The manufacturer shall have conducted tests on previously manufactured sheets of the same type and finish as proposed for this project. The term "appearance of base metal" refers to the metal coating on steel base metal.

2.2.1.2.1. Salt Spray Test: A sample of the sheets shall withstand a salt spray test for a minimum of 1,000 hours in accordance with ASTM B 117-90, including a scribe requirement in the test. Immediately upon removal of the panel from the test, the coating shall receive a rating of 10, no blistering, as determined by ASTM D 714-87; and a rating of 7, 4.2 mm failure at scribe, as determined by ASTM D 1654-92.

2.2.1.2.2. Formability Test: When subjected to a 180-degree bend over a 9.5 mm diameter mandrel, exterior coating film shall show no evidence of fracturing to the naked eye.

2.2.1.2.3. Accelerated Weathering, Chalking Resistance, and Color Change: A sample of the sheets shall withstand a weathering test a minimum of 2,000 hours in accordance with ASTM G 23-92, using a Type D apparatus, without cracking, peeling, blistering, loss of adhesion of the protective coating, or corrosion of the base metal. Protective coating that can be readily removed from the base metal with a pen-knife blade or similar instrument shall be considered as an area indicating loss of adhesion. After the 2,000 hour weatherometer test, exterior coating shall not chalk greater than No. 8 rating in accordance with ASTM D 659 test procedures. After the 2,000 hour weatherometer test, exterior coating color change shall not exceed 2 NBS units in accordance with ASTM D 2244-89,

2.2.1.2.4. Humidity Test. When subjected to a humidity cabinet test in accordance with ASTM D 2247-92 for 1,000 hours, a scored panel shall show no signs of blistering, cracking, creepage, or corrosion.

2.2.1.2.5. Impact Resistance. Factory-painted sheet shall withstand direct and reverse impact in accordance with ASTM D 2794-92 equal to 1.5 times metal thickness in mils, expressed in inch-pounds, with no loss of adhesion.

2.2.1.2.6. Abrasion Resistant Test. When subjected to the falling sand test in accordance with ASTM D 968 E1-81, the coating systems hall withstand a minimum of 30 liters of sand before the appearance of base metal.

2.2.1.2.7. Specular Gloss: Finished surfaces shall have a specular gloss value of 30 to 70 at angle of 60 deg in accordance with ASTM D 523-89.

2.2.2. Accessories. Flashing, trim, molded closure strips, ridge caps, and similar metal accessories shall not be less than the minimum thickness specified for metal roofing panels. Accessories shall be compatible with the roofing panels furnished. Exposed metal accessories shall have a factory color finish to match the panels furnished. Molded closure strips shall be closed-cell or solid-cell synthetic rubber or neoprene, or polyvinyl chloride premolded to match configuration of the roofing and shall not absorb or retain water. Provide continuous lightning protection.

2.2.3. Fascia Panels: Fascia panels shall be of same material and finish as the metal roof panels. Fascia panels shall also be subject to the same tests and performance requirements as the metal roof panels. The only exception to the above is vertical loading requirements as the fascia panels are installed in a vertical configuration rather than a sloped configuration.

2.2.4. Metal Roof Panel Support Structure: Secondary framing members, purlins, struts, bracing, angles, and secondary structural members shall conform to specifications as provided by Butler Manufacturing Company for the MR-24 Roof System or approved equal, and as specified below:

2.2.4.1. Roof Purlins: “C” or “Z”-shaped sections fabricated from 1.5 mm shop-painted, roll-formed steel. Purlin spacers shall be fabricated from 1.9 mm cold-formed galvanized steel sections.

2.2.4.2. Eave Struts: Unequal flange “C”-shaped sections formed to provide adequate backup for roof panels. Fabricate from 1.5 mm shop-painted roll-formed steel.

2.2.4.3. Flange and Sag Bracing: 41.3 x 41.3 mm angles fabricated from 1.5 mm shop-painted, roll-formed steel.

2.2.4.4. Secondary structural members, except columns and beams, shall be the manufacturer’s standard sections fabricated from 1.9 mm cold-formed galvanized steel.

2.2.4.5. Unless otherwise shown, subpurlins shall be located above and anchored to the purlins with bolts or screws. When additional subpurlins, which cannot be attached to purlins are needed, they shall be anchored to structural deck with blind screw-type expandable fasteners. Anchor plates for subpurlin supports shall sit directly on the structural deck surface.

2.2.5. Fascia Support Structure:

2.2.5.1. Metal Studs: 89 mm wide .9 mm thick galvanized steel studs @ 400 mm o.c.

2.2.5.2. Furring: 22 mm galvanized steel furring channels or manufacturer’s approved equal.

2.2.5.3. Expansion Bolts: 13 mm diameter x 150 mm long galvanized A36 steel expansion bolts w/washers and nuts.

2.2.6. Miscellaneous Materials: Color to match polyurethane sealing. No silicone sealants shall be used on any part of the SSMR system.

2.2.6.1. Hold-Down Clips: Two-piece high-strength 304 stainless steel concealed hold-down clips capable of allowing ± 32 mm movement in each direction for thermal expansion and contraction. Each concealed hold-down clip shall be secured by two (2) fasteners to supporting structure.

2.2.6.2. Insulation: Thermal resistance of insulation shall not be less than 6.69 m^2 K/W (R-38). ~~the R-values shown on the contract drawings.~~ R-values shall be determined at a mean temperature of 24 degrees C (75 degrees F) in accordance with ASTM C 518. Insulation shall be a standard product with the insulation manufacturer, factory marked or identified with insulation manufacturer's name or trademark and R-value. Identification shall be on individual pieces or individual packages.

2.2.6.3. Polyisocyanurate Rigid Board Insulation for Use Above a Roof Deck

Polyisocyanurate insulation Shall conform to ASTM C 1289, Type II, Class 1 (having a minimum recovered material content of 9 percent by weight of core material in the polyisocyanuate portion). ~~For polyisocanurate, the maximum design R-value per 25mm (1 inch) of insulation used shall be 1.27.~~ Facing shall be non-asphaltic, glass fiber reinforced.

2.2.6.4. Insulation Retainers

Insulation retainers shall be type, size, and design necessary to adequately hold the insulation and to provide a neat appearance. Metallic retaining members, shall be nonferrous or have a nonferrous coating. Nonmetallic retaining members, including adhesives used in conjunction with mechanical retains or at insulation seams, shall have a fire resistance classification not less than that permitted for the insulation.

2.2.6.5. Snow Guards: Snow guards as recommended by the SSMR manufacturer for installation in areas and patterns as noted on the drawings. Snow guards as manufactured by Real Tool Inc., S-5 by LM Curbs, Sno Gem or approved equal. Snow guards shall be continuous type. Contractor to ensure that installation of the snow guards does not interfere with the warranty certification required for the SSMR system.

STANDARD TEST METHOD FOR STRUCTURAL PERFORMANCE OF SSMRS BY UNIFORM STATIC AIR PRESSURE DIFFERENCE

1. Scope

1.1 This test method covers the determination of the structural performance of standing seam metal roof systems under uniform static air pressure differences, using a test chamber.

1.2. The proper use of this test method requires a knowledge of principles of pressure and deflection measurement.

1.3. This test method describes the apparatus to be used for applying specific test loads uniformly distributed to a specimen.

1.4. The values states in inch-pound units are to be regarded as the standard. The metric equivalents of inch-pound units may be approximate.

1.5. This standard may involve hazardous materials, operations, and equipment. This standard does not purport to address all of the safety problems associated with its use. It is the responsibility of whoever uses this standard to consult and establish appropriate safety and health practices and determine the applicability of regulatory limitations prior to use.

2. Descriptions of terms specific to this standard.

2.1. Specimen - The entire assembled unit submitted for test as described in Section 6.

2.2. Test Load - The specified difference in static air pressure (positive or negative) for which the specimen is to be tested, expressed in pascals.

2.3. Ultimate Load - The difference in static air pressure (positive or negative) at which failure of the specimen occurs, expressed in pascals.

2.4. Permanent Deformation - The permanent displacement from an original position that remains after an applied load has been removed.

2.5. Failure - The inability to carry additional load, permanent separation of the panels or of any of the component parts or connections, or when permanent deformation is sufficient to compromise the weatherability of the roof system.

3. Summary of Method

This test method consists of sealing the test specimen onto the face of a test chamber, supplying air to or exhausting air from the chamber at the rate required to maintain the test-pressure difference across the specimen, and observing, measuring, and recording the deflections, deformations, and nature of any failures of principal or critical members.

4. Significance and Use

4.1. This test method is a standard procedure for determining structural performance under uniform static air pressure difference. This typically is intended to represent the effects of wind loads on building roof systems.

4.2. The test loads shall be the roof uplift pressures multiplied by the factor of safety. The factor of safety against yielding of the panels shall be 1.3. The factor of safety against all other failure modes shall be 1.65 or 683.54 kgs/sq meter , whichever is less. The pressure multiplied by 1.65 or 683.54 kgs/sq meter shall be the maximum pressure required in the test.

5. Apparatus

5.1. The description of the apparatus is general in nature; any equipment capable of performing the test procedure within the allowable tolerances is permitted.

5.2. Major Components

5.2.1. Test Chamber - A test chamber or box with an open top upon which the specimen is installed. At least one static pressure tap shall be provided to measure the chamber pressure and shall be so located that the reading is unaffected by the velocity of the air supply to or from the chamber or any other air movement. The air supply opening into the chamber shall be arranged so the air does not impinge directly onto the test specimen with any significant velocity. A means of access into the chamber may be provided to facilitate adjustments and observations after the specimen has been installed.

5.2.2. The test chamber or the specimen mounting frame, or both, must not deflect under the test load in such a manner that the performance of the specimen will be affected.

5.2.3. Air System - A controllable blower, compressed air supply, an exhaust system, or reversible controllable blower designed to provide the required maximum air pressure difference across the specimen. The system shall provide an essentially constant air pressure difference for the required test period.

5.2.4. Pressure-Measuring Apparatus - A device to measure the test pressure difference within a tolerance of plus or minus 2 percent.

5.2.5. Deflection-Measuring Apparatus - A means of measuring deflections within a tolerance of plus or minus 0.25mm.

5.2.5.1. Deflections shall be measured at the midpoint between supporting roof members. These measurements shall be taken along the standing seam and at the midpoint of the panels between standing seams. Deflection of edge members that are part of the roof systems hall also be measured at similar locations. Additional measurements may be required by the specified.

5.2.5.2. When deflections are to be measured, the deflection gauges shall be installed so that the deflections of the components can be measured without being influenced by possible movements of, or movements within, the specimen or member supports.

6. Test Specimens

6.1. Specimens shall be of sufficient size to determine the performance of all parts of the system (approximately 3000 mm x 6000 mm). All parts of the test specimen shall be full size, using the same

materials, details, and methods of construction and anchorage as in the manufacturer's established system. Two specimens shall be required to perform the test. There shall be one specimen representing the corner condition and a second specimen representing the construction in the middle portion of the roof.

6.2. Width: Edge seals shall not contain structural attachments that restrict deflection of the test panels other than through the normal gable conditions.

6.3. Length: Spacing of the supports shall be the actual spacing of the panel s pans being evaluated with appropriate panel overhangs, if any, at end supports. The minimum number of spans to be tested is three and the minimum length is 4500 mm .

7. Calibration

Calibration of manometers and deflection-measuring devices is required prior to start of the test.

8. Required Information

8.1. In specifying this method the following information shall be supplied by the specifying authority:

8.1.1. The number of incremental loads and the positive and negative test loads at these increments at which deflection measurements are required, if different from paragraphs 9.2 and 9.3.

8.1.2. The duration of incremental and maximum loads, if different for paragraph 9.3.

8.1.3. The number and location of required deflection measurements. See paragraph 5.2.5.1.

9. Procedure

9.1. Fit the specimen upon the chamber opening. Support and secure the specimen b the same number and type of anchors used in installing the manufacturer's established system.

9.1.1. If air leakage through the test specimen is excessive, tape may be used to cover any cracks and joints through which the leakage is occurring. Tape shall not be used when there is a probability that it may significantly restrict differential movement between adjoining members. It is also permissible to cover the entire specimen and mounting panel with a single thickness of polyethylene film no thicker than 0.152 mm. Panels should be tested in such a manner that 100 percent of the exposed panel surface has a uniform static air pressure difference applied giving particular attention to ensuring that this load is applied between or behind all framing support members. The technique of application is important in order that full load is permitted to be transferred to the specimen and that the membrane does not prevent movement or failure of the specimen. Apply the film loosely with extra folds of material at each corner and at all offsets and recesses. When the load is applied, there will be no fillet caused by tightness of plastic film that will have a significant effect on the results.

9.2. Install any required deflection-measuring devices at their specified locations. A minimum of 6 points on the load-deflection curve shall be obtained.

9.3. Apply a nominal pressure equal to at least four times the dead weight of the specimen. Use this nominal pressure as the "reference zero load" and record initial readings after the applied load has been applied for 60 seconds and until dial gauges indicate no further increase in deflection. The next load, unless otherwise specified, shall be a load equal to one-quarter the design wind uplift load and shall be applied for not less than 60 seconds. Thereafter, reduce the pressure difference to no load and then back to "reference

zero load." Take readings to determine the permanent deformation or failure. Continue to apply loading in 5 increments reducing loading after each increment back down to no load and then back to "reference zero load" until the design wind uplift load is achieved. After completion of the above portion of the test, reduce the pressure difference to no load and then back to "reference zero load." Multiply the design wind uplift load by the factor of safety. Using one-third increments of this value, increase the load in three steps until this factored load is reached. Follow the same procedure as used to test to design load. Hold the test at final load for a minimum of 60 seconds then reduce the load to zero. If failure occurs prior to the full load, record the load at the time of failure.

10. Report

10.1 The report shall include the following information:

10.1.1. Date of the test and the report.

10.1.2. Identification of the specimen (manufacturer, source of supply, dimensions, model types, materials, and other pertinent information).

10.1.3. Detailed drawings of the specimen, showing dimensioned section profiles, framing location, panel arrangement, installation and spacing of anchorage, and any other pertinent construction details. Any modifications made on the specimen to obtain the reported values shall be noted on the drawings.

10.1.4. A tabulation of the number of the test load increments, the pressure differences exerted across the specimen at these increments, the pertinent deflections at these pressure difference, and permanent deformations at locations specified for each specimen tested.

10.1.5. The duration of test loads, including incremental loads.

10.1.6. A record of visual observations of performance.

10.1.7. When the tests are made to check conformity of the specimen to a particular specification, an identification or description of that specification.

10.1.8. A statement that the tests were conducted in accordance with this test method, or a full description of any deviations from this test method.

10.1.9. A statement as to whether or not tape or film, or both, were used to seal against air leakage, and whether in the judgment of the test engineer, the tape or film influenced the results of the test.

10.1.10. If several essentially identical specimens of a component are tested, results for all specimens shall be reported, each specimen being properly identified particularly with respect to distinguishing features or differing adjustments. A separate drawing for each specimen will not be required if all differences between them are noted on the drawing provide.

10.1.11. The test shall be performed by an independent testing laboratory or at the manufacturer's laboratory if an independent Registered Professional Engineer witnesses the test. In either case, the test report shall be signed and sealed by the engineer who witnessed the test.

PART 3 - EXECUTION

3.1. GENERAL

3.1.1. Installation shall be performed by the manufacturer's authorized installers, in accordance with the approved erection instructions and drawings and requirements specified herein, or in accordance with submitted shop drawings as approved by the Contracting Officer. The roof system supplier shall furnish a representative, at the job site, who is experienced in the erection of the roof system being installed, for the entire installation of the roof system. The representative shall be either an employee of the manufacturer with at least 3 years experience in installing the proposed roofing system or an employee of an independent installer that is certified by the roofing system manufacturer to have 3 years experience installing the roofing system being proposed. Qualifications of the job site representative shall be submitted for review and approval by the Contracting Officer.

3.1.2. Dissimilar materials which are not compatible shall be insulated from each other by means of gaskets and insulating compounds. Premolded closure strips shall be installed wherever covering sheets terminate in an open-end configuration, exclusive of flashings. The closure strip installation shall provide a watertight and weathertight closure. Exposed surfaces and edges shall be kept clean and free from sealant, metal cuttings, hazardous burrs, and other foreign materials. Stained, discolored, improperly drilled or damaged sheets shall be removed from the project site.

3.1.3. Comply with the manufacturer's instructions and recommendations for installation, as applicable to projection conditions and supporting substrates. Anchor panels and other components of the work securely in place, with provisions for thermal and structural movement.

3.1.3.1. Field cutting of roof panels by torch is not permitted.

3.1.3.2. Install panels with concealed fasteners and clips.

3.1.3.3. Install components required for a complete roofing system including trim, copings, fascia panels, corner units, ridge closures, clips, thermal block, seam covers, flashings, exterior gutters, sealants, gaskets, fillers, closure strips, soffit panels and vents, vent extensions, and similar items.

3.2. INSTALLATION

3.2.1. Metal Roof Panels: Fasten roof panels to supports with concealed hold-down clips in accordance with the manufacturer's instructions.

3.2.1.1. Install clips at each support with self-tapping fasteners.

3.2.1.2. Roofing panels shall be applied with the longitudinal configurations in the direction of the roof slope. Side laps shall have factory applied sealant. Joints at accessories shall be sealed as recommended by the manufacturer.

3.2.1.3. Complete seaming of panel joints by operation of a potable power-driven seaming machine of the type recommended by the panel manufacturer to provide a weathertight joint.

3.2.2. Metal Fascia Panels: Install in same manner as roofing panels. Factory fabricated internal and external corner units with mitered joints shall be provided where fascia changes direction of run. Provide

and install closure strips, shaped trim pieces, and flashings where fascia panels meet roofing panels, as recommended by the manufacturer.

3.2.3. Soffits: Install as shown on the contract drawings or as recommended by the manufacturer.

3.2.4. Roof/Fasica Panel Support Structure: Install as shown on the contract drawings or as recommended by the manufacturer.

3.3 INSTALLATION TOLERANCES

Shim and align panel units within installed tolerances of 6.4 mm in 6000 mm on level/plumb/slope and location/line as indicated on the contract drawings or as approved on submitted shop drawings, and within 3.2 mm offset of adjoining faces and of alignment of matching profiles.

3.4. CLEANING AND PROTECTION

3.4.1. Damaged Units: Replace panels and other components of the work that have been damaged or have deteriorated beyond successful repair by means of finish touch-up or similar minor repair procedures.

3.4.2. Cleaning: Remove temporary protective coverings and strippable films (if any) as soon as each panel is installed. Upon completion of panel installation, clean finished surfaces as recommended by the panel manufacturer, and maintain in a clean condition during the construction period.

3.5 WARRANTY SIGN

Provide 10 inch X 12 inch minimum size painted signs (see attachment #1) made of aluminum with a dark color background and letters of contrasting color. Use paint compatible with the aluminum. Sign shall read as indicated. Permanently post signs on attic access panels as directed by the Contracting Officer's Representative.

PART 4 - QUALITY CONTROL PROCEDURES

4.1. QUALITY CONTROL RECORD: Complete AF Form 1063 daily as follows:

4.1.1. Top Section:

Insert date and record number

Insert weather description and temperature

Indicate crew start/stop times

Indicate your start/stop times

Indicate total roof area

Indicate roof area completed previous to date

4.1.2. Products Section: This section is divided into major categories. Each category may include several materials:

4.1.2.1. Examine each material within the category and check proper box.

4.1.2.2. Check the “not applicable” box for work materials not included.

4.1.2.3. Assure that all materials in a category comply with the contract to result in a check in the “complies” box. To determine compliance, compare the material with the project specifications, drawings, and also with the approved manufacturer’s literature submitted. Since materials other than those covered by the components listed may be used, enter their compliance in the “all other materials” category.

4.1.3. Execution Section:

4.1.3.1. The work item numbers in this section of the record correspond to the work items in these basic QC requirements. The work items are for specification items considered to be a major concern. These items are in the basic QC requirements for convenience and tabulation.

4.1.3.2. Performance of the “actions” below the work item will result in an entry in the proper box on the QC record. Specification items not in the basic QC requirements must also be considered, and their acceptability grouped and documented in the “other” box.

4.1.4. Variance Section:

4.1.4.1. An entry in any “varies” box under the “products” or “execution” sections requires an explanation of the variance in this section. The explanation should be limited to a description of the variance only; reasons for variances are not necessary.

4.1.4.2. Indicate action taken to resolve each variance to result in complying work. If a variance is not resolved on the same day it occurs, the number of that day’s record must be entered in the space provided on records for all succeeding days, until the variance is resolved.

4.1.5. Closing Section: Sign the record at the end of the workday and submit it to the Government inspector.

4.2 WORK ITEMS

4.2.1. Work Item 1: Do not expose materials to moisture in any form before, during, or after delivery to the site.

Action: Inspect materials upon delivery for intact manufacturer’s shipping containers. Verify the vehicle delivering materials provided adequate cover for protection of materials. Inspect materials for evidence of contact with moisture before acceptance. Inspect job site storage; ascertain enclosed storage to protect materials from moisture from any source. Observe material handling from storage areas to roof. Delivery to job site requires the same attention as delivery to the storage area. Mark conspicuously all materials exposed to any form of moisture and have them permanently removed from the project site.

4.2.2. Work Item 2: Execute the work so that each area of the installation is completed on the same work day it is begun. Included are all flashings, metal trim shapes, closure strips, and all other related parts to complete assembly.

Action: Determine the area of work planned and ascertain that enough materials are at hand to complete it. Inspect work at day’s end and verify completion to “tie-in” point.

4.2.3. Work Item 3: Install temporary water cutoffs and tie-ins at the end of each work day. Remove cutoffs and tie-ins on resuming work day so that all vertical faces of insulation are exposed.

Action: None.

4.2.4. Work Item 4: Except for expedient temporary work, do not proceed with roofing work during inclement weather or when the ambient temperature is below 7.22 deg C or projected to fall below 7.22 deg C at any time during each work day.

Action: During bad weather, ascertain that work being done is only temporary and protects the facility and previously completed roofing system. Assure that all temporary work is removed before installation of permanent components when work is resumed.

4.2.5. Work Item 5: Do not apply roofing system components if moisture in any form can be seen or felt on the substrate to which the components will be secured. Substrate shall be free of debris, sharp objects, films, or other contaminants.

Action: Ascertain no moisture is on deck, vapor barrier, or any other existing surfaces before applying subsequent materials. If there are objects present which present a physical danger to the new roof system, they are to be swept off or smoothed out. Water shall be broomed or pumped off and the surface allowed to dry before commencement of work. Other contaminants which may be present and not addressed here shall be prevented from coming into physical contact with new roof system.

4.2.6. Work Item 6: N/A

4.2.7. Work Item 7: N/A

4.2.8. Work Item 8: N/A

4.2.9. Work Item 9: If traffic of any kind over the partially or fully completed roofing is unavoidable, provide and use adequate plank or plywood protection for the roofing.

Action: Inspect activities and methods used to transport materials over the completed or partially completed roofing system. Check adequacy of planks of plywood to protect system.

4.2.10. Work Item 10: Do not load or permit any part of a structure to be loaded with a weight that will adversely affect its safety.

Action: Assure that runways (such as wood planks or plywood) are used to distribute the load of materials and equipment hauling over the deck so as not to cause deflection of the deck. Check for broken welds on bends in metal decking because of materials or equipment handling.

4.2.11. Work Item 11: Removal of existing materials must result in clean, dry substrate, except for residual stains, providing a surface suitable to apply and secure new materials.

Action: Inspect substrate for excessive roughness, cracks, holes, deleterious coatings, or deteriorated condition. Assure that decking or other substrate determined to be defective is repaired, replaced, or brought to the attention of the Contracting officer. Assure that deck joints are sealed to prevent the passage of moisture.

4.2.12. Work Item 12: N/A

4.2.13. Work Item 13: N/A

4.2.14. Work Item 14: Clean seaming area using techniques required by the roofing manufacturer's specification.

Action: This is the most critical factor and should be monitored very carefully. Accurate seaming depends on proper cleaning on both mating surfaces. If incorrectly cleaned, flanges are to be taken apart and reinstalled.

4.2.15. Work Item 15: Probe seams for defects.

Action: Check all outside edges of the seam along its entire length. The completed seams hall be visually free of any voids, fishmouths, wrinkles, and shall be configured perfectly vertical.

4.2.16. Work Item 16: N/A

4.2.17: Work Item 17: N/A

END OF SECTION

STANDING SEAM METAL ROOF (SSMR) MANUFACTURER

PRE-AWARD CERTIFICATION SUBMITTAL

Submittal #1

The following statement is required from the SSMR manufacturer. The SSMR manufacturer is defined as the metal roof panel manufacturer, who also manufactures the other system components such as metal or other flashings, fascia panels, fasteners, and support structures.

THIS is to advise that _____ (roofing contractor/subcontractor) is an approved applicator of our roofing system and is capable of obtaining our 20-year labor and materials warranty. We will execute the Air Force 20-year warranty certification upon the successful completion of all work in accordance with the project plans and specifications or as modified to comply with our roofing system requirements, whichever is most stringent.

WE have reviewed the System Summary Sheet for Project No. _____

at _____ (location). We certify that the roofing systems listed below and described in the attached product literature are suitable for use with the roof system construction specified for this project as it relates to normal wear and exposure to the weather.

WE certify that the specified components are compatible with the roofing panels and would qualify for our 20-year materials and labor warranty. We accept responsibility for defects or failure of, or improper application of, and components used as a base over which the roofing is applied.

WE understand that proposed changes relating to the roofing system will be submitted for our review and acceptance. A signed copy approving the concept of the change will be returned to the Contracting Officer.

Building Number(s)	Roofing System Designation	Support Structure
_____	_____	_____
_____	_____	_____

A technical representative can be made available to attend the pre-construction conference to discuss proper installation procedures for our SSMR system. The same representative will also be available to make at least one in-progress inspection and one final acceptance inspection of the installation.

Roofing Manufacturer

Firm Name: _____

Address: _____

Authorized Representative:

Signature: _____

Printed or Typed Name: _____

Signed this _____ day of _____ 19__.

SYSTEM SUMMARY SHEET

Submittal #2

This is to notify you that we shall apply for your full 20-year labor and materials warranty for the following project:

Solicitation No. _____ Name of Building: _____

Address of Building: _____

Type and Use of Building: _____

( ) New Building ( ) Recover ( ) Tear Off

No. of Squares _____ Mfg Spec #_____ Feet of Flashing _____ Mfg Spec #_____

Description of Project: _____

Roof Slope _____ Does roof have adequate drainage? ( ) Yes ( ) No

Deck: ( ) Steel Gauge_____ Joist Spacing _____ Width of Rib _____

( ) Wood Type_____ Thickness _____ Joist Spacing _____

( ) Lightweight Concrete Type _____ Min. Thickness _____

( ) Concrete Type _____ ( ) Structural Wood Fiber Trade Name _____

( ) Gypsum Type _____ ( ) Other (Specify) _____

Vapor Retarder: ( ) No ( ) Yes ( ) Old ( ) New Type_____

New Insulation: ( ) Fiberboard ( ) Perlite

( ) Isocyanurate ( ) Other _____

( ) EPS ( ) Urethane

( ) Cellular Glass ( ) Fiberglass

Attachment: ( ) Mechanical Fastener

( ) Type _____

Insulation Mfg _____ No. of Layers _____ Thickness _____

Recover Info: Number of Existing Roofs? _____ Existing Surface? _____

Loose Gravel to be removed? Y/N Wet Insulation? Y/N

Waterlogged areas to be removed? ( ) Yes ( ) No

Roof vents to be used? ( ) Yes ( ) No Spacing _____

This job will be completed in accordance with the contract specifications or the latest issue of the SSMR manufacturer's "commercial roofing specifications" manual, whichever is most stringent, and we will use only approved products.

We plan to start this job on _____. We plan to complete this job on _____.

Name of Roofing Contractor/Subcontractor _____

Phone No. _____ Address _____

Signature of Company Official _____ Title _____

We acknowledge your notification that the U.S. Government 20-Year SSMR Warranty will be required on the roof described above and will sign and issue this warranty/guarantee to the Government upon your successful completion of this project. There will be a charge to you of $_____.

Manufacturer_____

Authorized Representative_____

APPOINTMENT OF QUALITY CONTROLLER

Submittal #3

_____ (name) is appointed as quality controller on Project No. _____ with the authority to regulate the quality of the work so that it conforms to the contract. The quality controller is authorized to order discontinuance of any operation causing nonconforming work.

The quality controller is experienced in the supervision and inspection of SSMR construction similar to that required in this contract. The quality controller understands all requirements of these specifications.

Name of Firm _____

Address _____

Telephone _____

Authorized Representative's Signature _____

Printed or Typed Name _____

Date _____

I acknowledge receipt of this letter.

Quality Controller's Signature _____

Printed or Typed Name _____

Date _____

STANDING SEAM METAL ROOF (SSMR)

20-YEAR LABOR AND MATERIAL WARRANTY

Submittal #4

WARRANTY COVERAGE

This Standing Seam Metal Roof (SSMR) System is delivered to the United States Government subject to a full material and workmanship warranty for 20 years that guarantees that the manufacturer will pay all costs necessary to maintain the SSMR roofing system in a watertight condition during the life of the warranty.

The specified roof system is equal to and comparable to our _____ 20-year system design and the components specified are compatible with our material. As the manufacturer of this system, we also accept responsibility for making repairs to the roofing system at no additional cost to the Government, to correct defective materials and workmanship down to the structural deck.

If the manufacturer fails to make required emergency and permanent repairs during the warranty period, as stated after notice by telephone from the Contracting Officer, the Government may have the work done by other authorized applicators and charge the cost to the manufacturer. The warranty provisions of this contract apply notwithstanding government inspection and acceptance. A separate warranty is required for each building. Failure to perform the work, resulting in the Government having the work performed, will not void this warranty.

TERMS, CONDITIONS, LIMITATIONS

Emergency repairs shall be made by the manufacturer or his licensed applicator within 48 hours of receipt of notice by telephone from the Contracting Officer and weather permitting, the manufacturer agrees to permanently repair the affected areas within 30 days by restoring them to a watertight condition, without cost to the government. If it is determined that leaks were caused by either an exclusion from coverage or a specific condition listed below, the manufacturer will repair the defects and payment will be made by the Government based on invoices supplied by the manufacturer.

The monetary liability to the manufacturer for replacement of a defective system is limited to the cost of the original installation of the total roof system.

EXCLUSIONS FROM COVERAGE

1. Natural disasters, acts of God (lightning, hurricanes, tornadoes, sustained winds exceeding

   116 km/hr as recorded at the nearest meteorological center, earthquakes, hail).

2. Acts of negligence or abuse and misuse of Government personnel, accidents, vandalism, civil disobedience, war, or damage caused by falling objects.

3. Damage by structural failure, settlement, movement, distortion, warpage, or displacement of structure.

4. Failure of material or flashing caused by movement of metal work not supplied by manufacturer issuing the warranty.

5. Leaks caused by repairs or alterations of roof system or installation of structures, fixtures or utilities on or through roof without prior written approval of manufacturer.

6. Storage of material on roof.

7. Moisture entering roof system through walls, coping, or any part of building structure except the roof, including from adjacent building.

8. Fire.

9. Faulty construction or design of building, including parapet wall, copies, chimneys, skylights, vents, or of structural roof deck.

10. Infiltration or condensation of moisture in or through underlying area; vapor condensation beneath the roof greater than the acceptable ambient moisture content for the given material as established by the appropriate American Society for Testing and Materials (ASTM) standard in effect at the time of installation.

11. Under no circumstances is the manufacturer responsible for damages to the building, its contents, or structural roof deck.

12. Membrane deterioration due to chemical attack from: HVAC oil, lubricating oil, solvents or other petroleum products.

SPECIFIC CONDITIONS THAT VOID THE WARRANTY

1. Failure by the owner to use, reasonable care in maintenance; failure to follow manufacturer's written maintenance instructions.

2. Failure of owner to make repairs to leaks not covered by manufacturer's warranty.

3. Repair work by any Contractor other than SSMR manufacturer's licensed applicator or use of unapproved material.

4. Changes in building usage which may affect roof performance unless approved in writing by the manufacturer prior to such change.

DETERMINATION OF RESPONSIBILITY

A government representative will call the manufacturer immediately when a leak is discovered. Receipt of notice by telephone or in writing from the Contracting Officer is evidence that the Contracting Officer has had the roof examined by a technically qualified representative of the government and has determined, based on this examination, that none of the above exclusions or specific conditions apply and the manufacturer is obligated to make the repairs.

After completion of the 48-hour emergency repair, the manufacturer, to avoid application of the warranty, must notify the Contracting Officer in writing of the existence of an exclusion stated herein. Failure to provide such notice will preclude the manufacturer from later disputing the coverage of the warranty. The burden to establish the existence of an exclusion or specific condition affecting the warranty is on the manufacturer.

After the occurrence of an exclusion from coverage or a specific condition which renders the warranty ineffective, the warranty shall be allowed to continue as long as the government returns the roofing system to its original condition and the manufacturer is allowed to make an oversee the repair. The manufacturer and his authorized installer will be paid for time and transportation to make or supervise the non-warranty repair.

BENEFICIARY

The warranty period starts on the date the roofing system (work) is accepted by the government from the roofing manufacturer's technical representative an the roofing contractor.

It is understood by the manufacturer and his licensed/approved applicator (contractor) that the warranty provided herein shall be for the benefit of the United States Government.

BURDEN OF PROOF

The manufacturers shall have the burden of proving the existence of a condition which established an exclusion from coverage, or which would render the warranty ineffective or null and void.

OTHER WARRANTIES

SIGNATURE The warranty contained herein shall be in addition to and not in lieu of any warranty otherwise applicable to the work or materials used in the contract.

Manufacturer Firm Name _____

Address _____

Authorized Representative's Signature _____

Date _____

Authorized Representative's Name _____

Title _____

Manufacturer's Warranty/Serial

Number of Building Number _____

Located at _____

Warranty/Guaranty Expiration Date _____

ROOF PANEL SAMPLE IDENTIFICATION TAGS

Submittal #5

Roof Panel Sample Identification Tags:

Include this attachment in the envelope with sample. Use indelible ink or typing.

Sample No. _____

Project No. _____

Air Base _____

Bldg No. _____

Roof Panel Membrane Mfg. _____

Roof Panel Type _____

Roof Panel Thickness _____

Roof Panel Lot Number _____

AS-BUILT ROOF SYSTEM SUMMARY

Submittal #6

As-Built Roof System Summary: After completion of construction, accurately fill in the information required on this sheet. If more than one system applies to the same building, complete one sheet for each system. Submit in quadruplicate before final acceptance.

Bldg No. _____ Project _____ _____AFB

Total Project Area in Square Feet _____

Building Area Where This System is Installed _____

_____

Deck Type _____ Deck Slope _____

Underlayment Components (type and number) _____

Underlayment Attachment Method _____

Support Structure:

Type _____

Manufacturer _____

Primary: Thickness _____ Attachment _____

Secondary: Thickness _____ Attachment _____

Metal Roof Panel:

Manufacturer _____

System Designation _____

Type of Metal _____

Type of Finish _____

Type of Seam _____

Type of Fastening _____

Was this a new system installed over existing roof? _____

Roof Completion Date _____

Roofing Contractor (NAME)_____

(ADDRESS)_____

(Day _____ 24 Hour _____

(TELEPHONE)

U.S. ARMY CORPS OF ENGINEERS

MISSOURI RIVER DIVISION

TESTING FOR WIND UPLIFT LOADING ON CONCEALED

ANCHOR CLIPS CONNECTION TO ROOFING PANEL

STANDING SEAM METAL ROOF SYSTEM (SSMRS)

ATTACHMENT 1

TABLE OF CONTENTS

PURPOSE

INTRODUCTION

TEST REQUIREMENTS

GENERAL

1. Scope

2. Test Facilities

3. Definitions

PERFORMANCE

4. Test Apparatus

5. Test Assembly

6. Test Procedure

7. Test Results

MARKING

8. Details and Submittals

PURPOSE

The purpose of this test method is to obtain data from a short-term static load test to use in assessing the wind uplift resistance performance of the concealed anchor clip connection to the roofing panel seams. The

capacity and/or the acceptability of this connection, based on the prescribed wind uplift test loadings, are to be determined by this test.

INTRODUCTION

The requirements contained herein will be used, as referenced in SECTION: STANDING SEAM METAL ROOFING SYSTEMS (SSMRS) for wind uplift testing for this SSMRS connection.

This test method determines the wind uplift pressure resistance for the roof panel to concealed anchor clip connection SSMRS by means of static loading applied as shown in FIGURE 1.

The uplift pressures determined by this test are compared to the design uplift pressures for the building roof given on the Contract Drawings. The required uplift pressures obtained from the results of the tests done in accordance with this document must exceed the design uplift pressure shown on the Contract Drawings multiplied by the appropriate factors of safety. The method used to calculate the design uplift pressures for the building were taken from Corps of Engineers criteria, TM5-809-1, Load Assumptions for Buildings, which, in turn, is based upon Section 6 of ANSI A58.1-1982, Minimum Design Loads for Buildings and Other Structures. The design pressures shown are dependent upon many factors such as wind gusts, roof height, the shape and configuration of the roof, roof slope, roof edge conditions, and the landscape surrounding the building. Design uplift pressures and thus the required uplift pressures for the tests will be greater around the perimeter of the roof, and for certain roof configurations along the ridges as well, than the uplift pressures in the center of roof areas.

This testing method may also be used to determine the ultimate uplift pressure for this SSMRS connection. Using the ultimate uplift pressure, the rated uplift pressure as defined hereinafter may be determined. This rated uplift pressure for this SSMRS connection may then be used on other Missouri River Division building projects whenever the required uplift pressures do not exceed the rated uplift pressures.

TEST REQUIREMENTS

GENERAL

1. Scope

1.1. The test method specified in this document is intended to provide test loading data that can be used to determine the uplift resistance for SSMRS concealed anchor clips connection to the roofing panel seams by using statically applied loads as shown on FIGURE 1. It is applicable to any type of SSMRS.

1.2. This test determines the ability of the SSMRS components at this connection including the panels, panel seams and concealed anchor clips to resist the prescribed test loading. The supporting structural members and fasteners shown on FIGURE 1 are not part of the test assembly for this test. This test may also be used to determine the ultimate uplift pressure of the connection by determining the pressure load level at failure. The rated uplift pressure of the roof test assembly may then be determined for the purpose of using the SSMRS on other Missouri River Division projects. See paragraphs 7.2, 7.5, 8.2, and 8.3.

2. Test Facilities

2.1. Location: This test may be done at a location owned and operated by the manufacturer of the SSMRS or at an established commercial testing laboratory. In either case, certification of the test reports will be as required in paragraph 8.2.

2.2. Environment: Testing shall be performed in an area of sufficient size to allow easy access, for the purpose of observation of all exposed components of the test assembly, at all times during the testing process. The test assembly is to be at room temperature when testing is performed.

3. Definitions:

3.1. Standing Seam Metal Roof System (SSMRS): As used in this testing document, the term “SSMRS” refers to concealed fastener type roof systems, which are sold as complete “standard products” by a single manufacturer.

3.2. Concealed anchor clip connection to roof panel: As used in this testing document, the connection controlled by this test consists of three items. They are:

a. The integrity of the standing seam rib - the ability of the rib seam to resist the concentrated loading applied by the clip and remain intact.

b. The restraint of the roof panels by the clips - the ability of the clip to stay within the rib seam under the concentrated loading applied to the clip.

c. The integrity of the concealed anchor clip - the ability of the clip to resist excessive deformations and distortions, and for multi-piece clips, to remain intact.

The conditions of the components of this connection, after testing, and the definitions of failure of the connection are given in paragraphs 7.3 and 7.5.

3.3 Uplift pressures: As used in this document, uplift pressures are the concentrated loads applied to the concealed anchor clip as contained or referenced hereinafter divided by the tributary load area of the concealed anchor clip being tested. The uplift pressures used herein are:

3.3.1. Design uplift pressures: The design uplift pressures are the wind uplift pressures that were calculated from Corps of Engineers design criteria and are given on the contract drawings.

3.3.2. Required uplift pressures: the required uplift pressure is the design uplift pressure, defined above, multiplied by the appropriate factor of safety.

3.3.3. Ultimate uplift pressure: The ultimate uplift pressure is the highest incremental uplift test pressure level sustained by the roof system test assembly before failure as defined in paragraphs 7.3 and 7.5 first occurs. The ultimate uplift pressure will be the highest load level that can be sustained by the test assembly for 1 minute without failure divided by the tributary load area of the concealed anchor clip. This will normally be the uplift pressure at the load cycle just prior to the cycle where failure occurred.

3.3.4. Rated uplift pressure: The rated uplift load will be either the required uplift pressure multiplied by the tributary load area of the concealed anchor clip, when testing for a particular building application; or the load where failure first occurs, when testing for the ultimate uplift pressure to rate a SSMRS.

PERFORMANCE

4. Test Apparatus

4.1. The test apparatus will consist of support framing, steel channels, steel angles, steel straps, fasteners, and other components and equipment needed to maintain a uniform steady static loading on the test

assembly described in paragraph 5 below as shown on FIGURE 1. The apparatus shall allow the performance of the test procedures prescribed herein within the allowable tolerances. The apparatus will be of sufficient dimensions to uniformly load and support the test assembly.

4.2. The load application apparatus will load the test assembly at a uniform rate that is slow enough to easily establish the point when failure as defined in paragraphs 7.3 and 7.5 first occurs. The load application apparatus will be capable of providing both: (1) A continuous reading of the loading as it is being applied during the test, and (2) At the conclusion of the test, the highest loading that was applied.

5. Test Assembly

5.1. The roof system components used in the test assembly shall be representative of the actual SSMRS components proposed for use in the roof installation as to materials, workmanship, and details. The clip attachment and seaming of the rib shall be done under conditions that are representative of the normal field conditions in the building construction industry. Properties of the materials and components used in the test assembly shall be recorded.

5.2. The test assembly shall be of sufficient size to construct as shown in FIGURE 1 and to test using the testing procedures contained herein.

6. Test Procedure

6.1. The test load conditions are regulated by changing the pull tension in the steel strap (see FIGURE 1). Testing will be done by loading in cycles. Testing will begin by applying 100 pounds on the strap in the first load cycle and increasing the loading by 25 pounds on each subsequent load cycle. Each test load will be applied for 1 minute. The applied load shall be reduced to zero after each load cycle. The test assembly shall be loaded in this cyclic manner until the prescribed uplift load is reached. Tolerances for the cyclic load values contained herein shall be:

a. Plus or minus 5 pounds for loads up to 200 pounds.

b. Plus or minus 10 pounds for loads greater than 200 pounds.

c. The time limits given for loads shall be the absolute minimum values.

6.2. Repairs or modifications, except to the load application apparatus, are not to be made during the test.

7. Test Results

7.1. The factors or safety used to determine the required uplift pressures shall be those given in the specification to which this testing criteria is attached.

7.2. The roof system manufacturer may choose to determine the rated uplift pressure for the SSMRS being tested. If so, the test loads applied to the test assembly are increased in the cyclic manner described in paragraph 6.1 until the failure load of the test assembly is determined. The rated uplift pressure is then calculated by taking 90% of the ultimate uplift pressure determined from the test. If the roof system manufacturer does not wish to reduce the uplift test pressure for the single test by this 90% factor, the uplift capacity pressures from 3 tests performed on 3 separate identical test assemblies may be averaged to establish the rated uplift pressure of the system. See paragraphs 7.5, 8.2, and 8.3.

7.3. A test assembly loaded to the required uplift pressure level shall comply with the following items during and at the conclusion of the test procedure described in paragraph 6.1:

7.3.1. Deformation of all components shall be elastic throughout the entire range of testing. Roofing panel ribs and concealed anchor clips shall show no sign of buckling or other permanent deformation or distortion.

7.3.2. The test assembly shall show no evidence of unseaming or rupture of the standing seam rib. Multi-piece concealed anchor clips shall maintain the securement and integrity of the connected components and show no sign of loosening.

7.3.3. The test assembly shall show no evidence of excessive opening of twisting of the roofing panel seam rib that would be uncharacteristic of an installed SSMRS.

7.4. Tests done on test assemblies which are loaded to the required uplift pressure level in accordance with paragraph 6 will be terminated in one of the following ways:

7.4.1. The test assembly passes if the required uplift pressure, based on the prescribed uplift load applied as designated in paragraph 6.1, is sustained for 1 minute and all the requirements of paragraph 7.3 are met.

7.4.2. The test assembly fails when it does not comply with paragraphs 6.1 and 7.3, or when the prescribed uplift load cannot be sustained by the test equipment for 1 minute.

7.5. Tests done to determine the ultimate uplift pressure of the roof system will be terminated at the failure load level. When testing to determine the ultimate uplift pressure level, failure will occur when any of the conditions given in paragraphs 7.3.1, 7.3.2, or 7.3.3 are not met or when the static load cannot be sustained by the equipment for 1 minute. The recorded value for the ultimate uplift pressure will be based upon the highest load level that can be sustained by the test assembly for 1 minute without failure. This will normally be the uplift pressure based upon the load at the cycle just prior to where failure occurred. The ultimate uplift pressure will be recorded in pounds per square foot (psf). The rated uplift pressure will then be determined in the manner described in paragraphs 7.2 and recorded in psf.

MARKING

8. Details and Submittals

8.1. Before testing begins, the following shall be submitted for approval:

8.1.1. Test Apparatus: A description of the testing apparatus along with sketches that completely identify and dimension the test equipment members. Details of the load application apparatus, including the load indicating devices.

8.1.2. Test Assembly: A description of the test assembly along with sketches that completely identify, dimension, and locate all components. Connection details of multi-piece concealed anchor clips and clip attachments to the panels.

8.1.3. Testing Procedure: A complete description of the testing procedure.

8.2. Certified Test Reports: After the testing has been completed the results shall be submitted in a certified test report as follows:

8.2.1. General: Regardless of the test location (see paragraph 2.1), the certification of the test will be done by a representative of a recognized independent commercial testing laboratory that is not associated in any way with the manufacturer of the SSMRS, with the contractor, or with any subcontractors that have or will perform work of the project.

8.2.2. Content: The test report shall be organized in an orderly manner. It shall contain the following:

8.2.2.1. All of the information required in paragraph 8.1 concerning the test apparatus, test assembly and testing procedures.

8.2.2.2. A narrative statement certifying compliance with all of the testing criteria and requirements contained herein.

8.2.2.3. For tests done to determine the rated uplift pressure, a statement containing the rated pressure level of the roof system along with the failure mode of the test assembly or assemblies on which the rating is based. The failure of the test assembly should be referenced to the requirements listed in paragraph 7.3. A short narrative explaining what component failed and how failure occurred should accompany the certification.

8.2.3. When testing for the required uplift pressures for a particular building project, the report shall be submitted with the shop drawings that detail the SSMRS installation.

8.2.4. When testing for the rated uplift pressure, a certified test report may be submitted for approval prior to use of the SSMRS on a Missouri River Division project.

8.3. Use of Rated Standing Seam Roofing Systems: Once the rated uplift pressure for a roofing system has been determined, that system may then be used on Missouri River Division building projects under the following conditions. Whenever the required uplift pressures do not exceed the rated uplift pressure of the roof system, the system may be used on that project without further testing. The certified test report that contains the rated uplift pressure, along with a complete description of pertinent information regarding the components and assembly details for the SSMRS (see paragraph 8.2), will be included with the project shop drawings.

** End of Test **

U.S. ARMY CORPS OF ENGINEERS

MISSOURI RIVER DIVISION

AIR BAG TESTING FOR WIND UPLIFT LOADING ON

STANDING SEAM METAL ROOF SYSTEMS (SSMRS)

ATTACHMENT 2

TABLE OF CONTENTS

PURPOSE

INTRODUCTION

SSMRS TEST REQUIREMENTS

GENERAL

1. Scope

2. Test Facilities

3. Definitions

PERFORMANCE

4. Test Apparatus

5. Test Assembly

6. Test Procedure

7. Test Results

MARKING

8. Details and Submittals

PURPOSE

The purpose of this test method is to obtain data from a short-term static load test to use in assessing the wind uplift resistance performance of SSMRS. The acceptability and the capacity of SSMRS; including the roof panels and the panel attachment to concealed anchor clips and other members; concerning resistance to prescribed wind uplift loading pressures are to be determined by this test.

INTRODUCTION

The requirements contained herein will be used, as referenced in SECTION: STANDING SEAM METAL ROOFING SYSTEMS (SSMRS) (AND FASCIAS), for wind uplift testing for SSMRS.

This test method determines the wind uplift pressure resistance for SSMRS by means of static air pressure applied to the underside of a SSMRS test assembly by inflated air bags.

The uplift pressures determined by this test is compared to the design uplift pressures for the building roof given on the contract drawings. The required uplift pressures obtained from the tests done in accordance with this document must exceed the design uplift pressure, shown on the contract drawings multiplied by the appropriate factors of safety. The method used to calculate the design uplift pressures for the building were

taken from Corps of Engineers criteria, TM5-809-1, Load Assumptions for Buildings, which, in turn, is based upon Section 6 of ANSI A58-1-1982, Minimum Design Loads for Buildings and Other Structures. The design pressures shown are dependent upon many factors such as wind gusts, roof height, the shape and configuration of the roof, roof slope, roof edge conditions, and the landscape surrounding the building. Design uplift pressures and thus the required uplift pressures will be greater around the perimeter of the roof, and for certain roof configurations along the ridges as well, than the uplift pressures in the center of roof areas. Multiple tests may be necessary to model the uplift loading conditions for the various areas of building roof to produce the most efficient overall SSMRS installation.

This testing method may also be used to determine the ultimate uplift pressure for the SSMRS. Using the ultimate uplift pressure, the rated uplift pressure as defined hereinafter may be determined. The rated SSMRS may then be used on other Missouri River Division building projects whenever the required uplift pressures do not exceed the rated uplift pressures.

SSMRS TEST REQUIREMENTS

GENERAL

1. Scope

1.1. The test method specified in this document is intended to provide uplift resistance data for SSMRS by using statically applied pressures from confined air bags on the underside of the roof panels. It is applicable to any type of SSMRS.

1.2. This test determines the ability to the system of SSMRS components including roof panels, concealed anchor clips, fasteners, accessories, etc., and insulation, if applicable, to resist the prescribed uplift pressure. Supporting structural roof system members and the connections thereto, including structural roof deck of the type controlled be the Steel Deck Institute, are not part of this test. This test may also be used to determine the ultimate uplift pressure of the SSMRS by determining the pressure level at failure. The rated uplift pressure of the roof test assembly may then be determined for the purpose of using the SSMRS on other Missouri River Division projects. See paragraph 7.2, 7.5, 8.2, and 8.3.

2. Test Facilities:

2.1. Location: This test may be done at a location owned and operated by the manufacturer of the SSMRS or at an established commercial testing laboratory. In either case, certification of the test reports will be as required in paragraph 8.2.

2.2 Environment: Testing shall be performed in an area of sufficient size to allow easy access, for the purpose of observation of all exposed components of the test assembly, at all times during the testing process. The test assembly is to be at room temperature when testing is performed.

3. Definitions:

3.1. Standing Seam Metal Roof (SSMR): As used in this testing document, the term “SSMRS” refers to concealed fastener type roof systems, which are sold as complete “standard products” by a single manufacturer.

3.2. Air Bag Test: The air bag test utilizes a test apparatus that consists of inflatable pleated air bags and a controllable blower to create and maintain a static air pressure that simulates a uniform steady negative (outward) static pressure on the test assembly of a roofing system.

3.3. Design Uplift Pressures: The design uplift pressures are wind uplift pressures that were calculated from Corps of Engineers design criteria and are given on the contract drawings.

3.4. Required Uplift Pressure: The required uplift pressure is the design uplift pressures, defined above, multiplied by the appropriate factor of safety.

3.5. Ultimate Uplift Pressure: The ultimate uplift pressure is the highest incremental uplift pressure level sustained by the SSMRS test assembly before failure as defined in paragraphs 7.3 and 7.5 first occurs. The ultimate uplift pressure will be the highest loading level that can be sustained by the test assembly for 1 minute without failure. This will normally be the uplift pressure at the load cycle just prior to the cycle where failure occurred.

3.6. Rated Uplift Pressure: The rated uplift pressure of a tested roof system shall be either 90% of the tested ultimate uplift pressure from one roof test or the average tested ultimate uplift pressures from 3 tests on 3 separate identical test assemblies of the roof system under consideration. See paragraphs 7.2, 7.5, 8.2, and 8.3.

3.7. Prescribed Uplift Pressure: The prescribed uplift pressure may be either the required uplift pressure, when testing for a particular building application; or the pressure where failure first occurs, when testing for the ultimate uplift pressure to rate a SSMRS.

PERFORMANCE

4. Test Apparatus

4.1. The test apparatus will consist of inflatable pleated air bags, located on the underside of the test assembly, and all other equipment needed to maintain a uniform steady negative (outward on the roof) static pressure on the test assembly. The apparatus will allow performance of the test procedures prescribed herein within the allowable tolerances. The apparatus will be of sufficient dimensions to uniformly load all of the roofing system test assembly described in paragraph 5 below. The apparatus will include a sufficient number of pleated air bags with enough extra bag material and excess volume to uniformly load the entire test assembly during all conditions of deflections of the roofing system. At least two static pressure taps, one at each end of the test assembly, shall be provided to measure the air bags pressures and shall be located so that the pressure readings are unaffected by the velocity of the air supply to the bags or by any other air movement. The test pressure will be the average of the pressure readings from the taps. A single manifold that is connected to all air bags and is of sufficient size to equalize the pressure under the entire test assembly will be used.

4.2. The air system is to consist of a controllable blower, or a constant volume blower, or both, with an adjustable pressure relief damper capable of providing constant static air pressure differential across the roofing system test assembly for the duration of the test. A manometer(s) shall be used to determine air pressure differences.

5. Test Assembly

5.1. The roof system test assembly shall be representative of the actual SSMRS installation proposed for use as to materials, workmanship, and details. It shall be assembled under conditions that are representative of the normal field conditions in the building construction industry. Properties of the materials and components used in the test assembly shall be recorded.

5.2. The dimensions of the test assembly are to be a minimum of 5 panels wide and 5 spans long but not less than 6 feet wide by 12 feet long. The test assembly shall contain one intermediate panel splice joint if panel splices will occur in the actual field installation. Only one panel within a test assembly will have an intermediate splice joint. The intermediate splice shall be located near the center roof panel and near the center most standing seam panel-span that is used for deflection readings. See paragraph 6.3. The assembly components, are to be sized, located, and have materials strengths to best simulate the field conditions of the installed SSMRS.

5.3. The periphery of the roofing system test assembly shall be the manufacturers actual components at eaves, ridges, and edges. Concealed anchor clips shall be spaced no closer in the test than will be used in the actual roof installation. Test assemblies shall model end and edge attachment conditions and panel splice conditions (as stated in paragraph 5.2) in such a way that items which do not occur in close proximity on the roof are not placed in close proximity in the test assembly. All fasteners used in the test assembly shall be the same as those used in the actual roof system installation.

6. Test Procedure

6.1. The test pressure conditions are regulated by changing the static pressure in the air bags to, in turn, change the uplift pressure on the test assembly. Testing will start by raising the air pressure to 5 pounds per square foot (psf) and holding for 1 minute while initial position deflection readings are taken. After the initial readings have been recorded, the roof system shall be loaded in a cyclic manner until the prescribed uplift pressure is reached. The air pressure for successive load cycles shall be increased in increments not greater than 15 psf up to 50 psf, in increments not greater than 10 psf between 50 and 90 psf, in increments not greater than 5 psf above 90 psf. The test pressure shall be held at each increment for 1 minute. The air pressure shall be returned to

6.2. Repairs or modifications, except to the load application apparatus, are not to be made during the test.

7. Test Results

7.1. The factors of safety used to determine the required uplift pressures shall be those given in the specification to which this testing criteria is attached.

7.2. The roof system manufacturer may choose to determine the rated uplift pressure for the SSMRS being tested. If so, the test loads applied to the test assembly are increased in the cyclic manner described in paragraph 6.1 until the failure load of the test assembly is determined. The rated uplift pressure is then calculated by taking 90% of the ultimate uplift pressure determined from the test. If the roof system manufacturer does not wish to reduce the uplift test pressure for the single test by this 90% factor, the uplift capacity pressures from 3 tests performed on 3 separate identical test assemblies may be averaged to establish the rated uplift pressure of the system. See paragraphs 7.5, 8.2, and 8.3.

7.3. A test assembly loaded to the required uplift pressure level shall comply with the following items during and at the conclusion of the test procedure described in paragraph 6.1:

7.3.1. Deformation of all components shall be elastic throughout the entire range of testing. Roofing panel ribs and concealed anchor clips shall show no sign of buckling or other permanent deformation or distortion.

7.3.2. The test assembly shall show no evidence of unseaming or rupture of the standing seam rib. Multi-piece concealed anchor clips shall maintain the securement and integrity of the connected components and show no sign of loosening.

7.3.3. The test assembly shall show no evidence of excessive opening or twisting of the roofing panel seam rib that would be uncharacteristic of an installed SSMRS.

7.4. Tests done on test assemblies which are loaded to the required uplift pressure level in accordance with paragraph 6 will be terminated in one of the following ways:

7.4.1. The test assembly passes if the required uplift pressure, based on the prescribed uplift load applied as designated in paragraph 6.1, is sustained for 1 minute and all the requirements of paragraph 7.3 are met.

7.4.2. The test assembly fails when it does not comply with paragraphs 6.1 and 7.3, or when the prescribed uplift load cannot be sustained by the test equipment for 1 minute.

7.5. Tests done to determine the ultimate uplift pressure of the roof system will be terminated at the failure pressure level. When testing for the ultimate uplift pressure level, failure will occur when any of the conditions given in paragraphs 7.3.1, 7.3.2 or 7.3.3. are not met or when the static pressure cannot be sustained by the equipment for 1 minute. The recorded value for ultimate uplift pressure will be the highest loading level that can be sustained by the test assembly for 1 minute without failure. This will normally be the uplift pressure at the load cycle just prior to the cycle where failure occurred. The ultimate uplift pressure will be recorded in psf. The rated uplift pressure will then be determined in the manner described in paragraph 7.2 and recorded in psf.

MARKING

8. Details and Submittals

8.1. Before testing begins, the following shall be submitted for approval:

8.1.1. Test Apparatus: A description of the testing apparatus along with sketches that completely identify and dimension the test equipment members. Details of the air circulation system including manifold, piping and pressure reading devices. Details of the air supply system.

8.1.2. Test Assembly: A description of each roof panel test assembly along with sketches that completely identify locations and spacings of all components of the system. Connection details of all roof panel anchorages including hold-down clips, ridge attachments, eave attachments, splice connections and attachments at roof edges. Fastener types, numbers and sizes for all attachments and connections.

8.1.3. Testing Procedure: A complete description of the testing procedure. When testing for a particular building project, a listing of the maximum static test pressures along with all cyclic pressure increments. When testing for the ultimate uplift pressure, a listing of the cyclic load increments up to a load level well above the anticipated failure load. A diagram showing the locations of all required deflection readings. A description of the deflection reading devices.

8.2. Certified Test Reports: After the testing has been completed the results shall be submitted in a certified test report as follows:

8.2.1. General: Regardless of the test location (see paragraph 2.1), the certification of the test will be done by a representative of a recognized independent commercial testing laboratory that is not associated in any way with the manufacturer of the SSMRS, wit the contractor, or with any subcontractors that have or will perform work on the project.

8.2.2. Content: The test report shall be organized in an orderly manner. It shall contain the following:

8.2.2.1. All of the information required in paragraph 8.1 concerning the test apparatus, test assembly and testing procedures.

8.2.2.2. The deflection readings taken during the test along with a narrative description of any significant observations concerning deflections.

8.2.2.3. A narrative statement certifying compliance with all of the testing criteria and requirements contained herein.

8.2.2.4. For tests done to determine the rated uplift pressure, a statement containing the rated pressure level of the roof system along with the failure mode on which the rating is based. The failure of the system should be referenced to the requirements listed in paragraph 7.3. A short narrative explaining what roof system component failed and the how failure occurred should accompany the certification.

8.2.3. When testing for the required uplift pressures for a particular building project, the report shall be submitted with the shop drawings that detail the SSMRS installation.

8.2.4. When testing for the rated uplift pressure, a certified test report may be submitted for approval prior to use of the SSMRS on a Missouri River Division project.

8.3. Use of Rated Standing Seam Roofing Systems: Once the rated uplift pressure for a roofing system has been determined, that system may then be used on Missouri River Division building projects under the following conditions: Whenever the required uplift pressures do not exceed the rated uplift pressure of the roof system, the system may be used on that project without further testing. The certified test report that contains the rated uplift pressure, along with a complete description of pertinent information regarding the components and assembly details for the SSMRS (see paragraph 8.2), will be included with the project shop drawings.

** End of Test **

ATTACHMENT #1

DO NOT
MAKE REPAIRS
OR ALTERATIONS
To this Roof!

WITHOUT APPROVAL

FROM THE
BASE CIVIL ENGINEER

THIS ROOF IS UNDER WARRANTY UNTIL (1) BY

MANUFACTURER (2)
ADDRESS
CITY, STATE, ZIP CODE
PHONE: AREA CODE/NUMBER

SIGNS - TO BE POSTED AS SPECIFIED

INSERT WARRANTY EXPIRATION DATE YEARS FROM FINAL ACCEPTANCE.
INSERT THE MANUFACTURER'S NAME, ADDRESS, AND PHONE NUMBER

This page intentionally blank

SECTION 07600

SHEET METALWORK, GENERAL

PART 1 GENERAL

1.1 REFERENCES

The publications listed below form a part of this specification to the extent referenced. The publications are referred to in the text by basic designation only.

AMERICAN SOCIETY FOR TESTING AND MATERIALS (ASTM)

ASTM A 167	(1993) Stainless and Heat-Resisting Chromium-Nickel Steel Plate, Sheet, and Strip
ASTM B 32	(1993) Solder Metal
ASTM B 209	(1993) Aluminum and Aluminum-Alloy Sheet and Plate
ASTM B 221	(1993) Aluminum and Aluminum-Alloy Extruded Bars, Rods, Wire, Shapes, and Tubes
ASTM B 370	(1992) Copper Sheet and Strip for Building Construction
ASTM D 226	(1994) Asphalt-Saturated Organic Felt Used in Roofing and Waterproofing

INSECT SCREENING WEAVERS ASSOCIATION (ISWA)

ISWA IWS 089	(1990) Recommended Standards and Specifications for Insect Wire Screening

SHEET METAL AND AIR CONDITIONING CONTRACTORS NATIONAL ASSOCIATION (SMACNA)

SMACNA-02	(1993) Architectural Sheet Metal Manual

1.2 GENERAL REQUIREMENTS

Sheet metalwork shall be accomplished to form weathertight construction without waves, warps, buckles, fastening stresses or distortion and shall allow for expansion and contraction.

1.2.1 Coordination

Cutting, fitting, drilling, and other operations in connection with sheet metal required to accommodate the work of other trades shall be performed by sheet metal mechanics. Installation of sheet metal items used in conjunction with roofing shall be coordinated with roofing work to permit continuous roofing operations. Sheet metalwork pertaining to heating, ventilating and air conditioning is specified in Section 15895 AIR SUPPLY, DISTRIBUTION, VENTILATION, AND EXHAUST SYSTEM.

1.3 SUBMITTALS

Government approval is required for submittals with a "GA" designation; submittals having an "FIO" designation are for information only. The following shall be submitted in accordance with Section 01330 SUBMITTAL PROCEDURES:

SD-04 Drawings

Materials; FIO.

Drawings of sheet metal items showing weights, gauges or thicknesses; types of materials; expansion joint spacing; fabrication details and installation procedures.

1.4 DELIVERY, STORAGE, AND HANDLING

Materials shall be adequately packaged and protected during shipment and shall be inspected for damage, dampness and wet-storage stains upon delivery to the jobsite. Materials shall be clearly labeled as to type and manufacturer. Sheet metal items shall be carefully handled to avoid damage. Materials shall be stored in dry, ventilated areas until immediately before installation.

PART 2 PRODUCTS

2.1 MATERIALS

Lead, lead-coated metal, and galvanized steel shall not be used. Any metal listed by SMACNA 02 for a particular item may be used, unless otherwise specified or indicated. Materials shall conform to the requirements specified below and to the thicknesses and configurations established in SMACNA-02. Different items need not be of the same metal, except that if copper is selected for any exposed item, all exposed items shall be copper.

2.1.1 Accessories

Accessories and other items essential to complete the sheet metal installation, though not specifically indicated or specified, shall be provided.

2.1.2 Aluminum Extrusions

ASTM B 221, Alloy 6063, Temper T5.

2.1.3 Omitted

2.1.4 Sealant

Unless otherwise specified, sealant shall be an elastomeric weather resistant sealant as specified in Section 07900 JOINT SEALING.

2.1.5 Fasteners

Fasteners shall be compatible with the fastened material and shall be the type best suited for the application.

2.1.6 Felt

ASTM D 226, Type I.

2.1.7 Omitted

2.1.8 Aluminum Alloy Sheet and Plate

ASTM B 209, anodized clear, form, alloy and temper appropriate for use.

2.1.9 Copper

ASTM B 370, Temper H 00.

2.1.10 Stainless Steel

ASTM A 167, Type 302 or 304; fully annealed, dead soft temper.

2.1.11 Solder

ASTM B 32, 95-5 tin-antimony.

2.1.12 Through Wall Flashing

Flashing shall be copper, copper-clad stainless steel or stainless steel having factory-formed deformations providing mechanical bond in mortar joints. Minimum metal thickness shall be as listed below:

a. Copper: Below the roof line - 283.5 g per 0.093 square meters

b. Cooper-clad stainless steel: Below the roof line - 0.5 mm thick

c. Stainless steel: Below the roof line - 0.5 mm thick

2.1.13 Louver Screen

Type III aluminum alloy insect screening conforming to ISWA IWS 089.

PART 3 EXECUTION

3.1 GENERAL

Items such as gutters, downspouts and louvers shall be fabricated in conformance with SMACNA-02 and as indicated. Unless otherwise specified or indicated, exposed edges shall be folded back to form a 13 mm hem on the concealed side and bottom edges of exposed vertical surfaces shall be angled to form drips.

3.2 EXPANSION JOINTS

Expansion joints shall be provided as specified in SMACNA-02. Expansion joints in continuous sheet metal shall be provided at 12 m intervals for copper and stainless steel and at 9.6 meter intervals for aluminum, except extruded aluminum fascias which shall have expansion joints at not more than 3.6 meter spacing. Joints shall be evenly spaced. An additional joint shall be provided where the distance between the last expansion joint and the end of the continuous run is more than half the required interval spacing.

3.3 PROTECTION OF ALUMINUM

Aluminum shall not be used where it will be in contact with copper or where it will contact water which flows over copper surfaces. Aluminum that will be in contact with wet or pressure-treated wood, mortar, concrete, masonry or ferrous metals shall be protected against galvanic or corrosive action by one of the following methods:

3.3.1 Paint

Aluminum surfaces shall be solvent cleaned and given one coat of zinc-molybdate primer and one coat of aluminum paint as specified in Section 09900 PAINTING, GENERAL.

3.3.2 Nonabsorptive Tape or Gasket

Nonabsorptive tape or gasket shall be placed between the adjoining surfaces and cemented to the aluminum surface using a cement compatible with aluminum.

3.4 CONNECTIONS AND JOINTING

3.4.1 Soldering

Soldering shall apply to copper, and stainless steel items. Edges of sheet metal shall be pretinned before soldering is begun. Soldering shall be done slowly with well heated soldering irons so as to thoroughly heat the seams and completely sweat the solder through the full width of the seam. Edges of stainless steel to be pretinned shall be treated with soldering acid flux. Soldering shall follow immediately after application of the flux. Upon completion of soldering, the acid flux residue shall be thoroughly cleaned from the sheet metal with a water solution of washing soda and rinsed with clean water.

3.4.2 Riveting

Joints in aluminum sheets 1 mm or less in thickness shall be mechanically made.

3.4.3 Seaming

Flat-lock and soldered-lap seams shall finish not less than 25 mm wide. Unsoldered plain lap seams shall lap not less than 75 mm unless otherwise specified. Flat seams shall be made in the direction of the flow.

3.5 CLEATS

A continuous cleat shall be provided where indicated or specified to secure loose edges of the sheet metalwork. Butt joints of cleats shall be spaced approximately 3 mm apart. The cleat shall be fastened to supporting wood construction with nails evenly spaced not over 300 mm on centers. Where the fastening is to be made to concrete or masonry, screws shall be used and shall be driven in expansion shields set in concrete or masonry.

3.6 GUTTERS AND DOWNSPOUTS

Gutters and downspouts shall be installed as indicated. Gutters shall be supported by continuous cleats or by cleats spaced not less than 915 mm apart. Downspouts shall be rigidly attached to the building. Supports for downspouts shall be spaced according to manufacturer's recommendations.

3.7 FLASHINGS

Flashings shall be installed at locations indicated and as specified below. Sealing shall be according to the flashing manufacturer's recommendations. Flashings for heating and plumbing, including piping, roof and floor drains and for electrical conduit projections through roof or walls are specified in other sections. Perforations in flashings made by masonry anchors shall be covered up by an application of bituminous plastic cement at the perforation. Flashing shall be installed on top of joint reinforcement. Flashing shall be formed to direct water to the outside of the system.

3.7.1 Omitted

3.7.2 Omitted

3.7.3 Omitted

3.7.4 Through Wall Flashing

Through wall flashing includes sill and lintel flashing. The flashing shall be laid with a layer of mortar above and below the flashing so that the total thickness of the two layers of the mortar and flashing are the same thickness as the regular mortar joints. Joints in flashing shall be lapped and sealed. Flashing shall be one piece for lintels and sills.

3.7.4.1 Lintel Flashing

Lintel flashing shall extend the full length of lintel. Bedjoints of lintels at control joints shall be underlaid with sheet metal bond breaker.

3.7.4.2 Sill Flashing

Sill flashing shall extend the full width of the sill and not less than 100 mm beyond ends of sill except at control joint where the flashing shall be terminated at the end of the sill.

3.8 FASCIAS

Fascias shall be fabricated and installed as indicated and in accordance with SMACNA 02.

3.9 INSTALLATION OF LOUVERS

Louvers shall be rigidly attached to the supporting construction. The installation shall be rain tight. Louver screen shall be installed as indicated.

END OF SECTION

SECTION 07840

FIRESTOPPING

PART 1 GENERAL

1.1 REFERENCES

The publications listed below form a part of this specification to the extent referenced. The publications are referred to in the text by basic designation only.

AMERICAN SOCIETY FOR TESTING AND MATERIALS (ASTM)

ASTM E 84	(1995a) Surface Burning Characteristics of Building Materials
ASTM E 814	(1994b) Fire Tests of Through-Penetration Fire Stops

UNDERWRITERS LABORATORIES (UL)

UL-05	(1995; Supple) Fire Resistance Directory
UL 723	(1993; Rev Apr 1994) Test for Surface Burning Characteristics of Building Materials
	(1994) Fire Tests of Through-Penetration
UL 1479	Firestops

1.2 SUBMITTALS

Government approval is required for submittals with a "GA" designation; submittals having an "FIO" designation are for information only. The following shall be submitted in accordance with Section 01330 SUBMITTAL PROCEDURES:

SD-04 Drawings

Firestopping Materials; FIO.

Detail drawings including manufacturer's descriptive data, typical details, installation instructions and the fire-test data and/or report as appropriate for the fire resistance rated construction and location. Submittal shall indicate the firestopping material to be provided for each type of application. When more than five penetrations are to receive firestopping, drawings shall indicate location and type of application.

SD-13 Certificates

Firestopping Materials; FIO.

Certificates attesting that firestopping material complies with the specified requirements. The label or listing of the Underwriters Laboratories will be acceptable evidence. In lieu of the label or listing, a written certificate may be submitted from an approved, nationally recognized testing agency equipped to perform such services, stating that the items have been tested and conform to the specified requirements and testing methods.

Installer Qualifications; FIO.

Certification stating that installer is qualified and trained to install the specified firestopping material.

1.3 GENERAL REQUIREMENTS

Firestopping shall consist of furnishing and installing a material or a combination of materials to form an effective barrier against the spread of flame, smoke and gases, and maintain the integrity of fire resistance rated partitions, floors, including through-penetrations and construction joints. Through-penetrations include the annular space around pipes, tubes, conduit, wires, cables and vents. Construction joints include those used to accommodate expansion, contraction, wind, or seismic movement; firestopping material shall not interfere with the required movement of the joint. All penetrations thru fire rated walls shall be firestopped.

1.4 STORAGE AND DELIVERY

Materials shall be delivered in the original unopened packages or containers showing name of the manufacturer and the brand name. Materials shall be stored off the ground and shall be protected from damage and exposure to elements. Damaged or deteriorated materials shall be removed from the site.

1.5 INSTALLER QUALIFICATIONS

Installer of firestopping material shall be trained by the manufacturer or the manufacturer's representative, and shall have a minimum of 3 years experience in the installation of firestopping of the type specified.

PART 2 PRODUCTS

2.1 FIRESTOPPING MATERIALS

Firestopping materials shall consist of commercially manufactured products complying with the following minimum requirements:

2.1.1 Fire Hazard Classification

Material shall have a flame spread of 25 or less, and a smoke developed rating of 50 or less, when tested in accordance with ASTM E 84 or UL 723. Material shall be an approved firestopping material as listed in UL-05.

2.1.2 Toxicity

Material shall be nontoxic to humans at all stages of application.

2.1.3 Fire Resistance Rating

Firestopping will not be required to have a greater fire resistance rating than that of the assembly in which it is being placed.

2.1.3.1 Through-Penetrations

Firestopping materials for through-penetrations, as described in paragraph GENERAL REQUIREMENTS, shall provide "F" and "T" fire resistance ratings in accordance with ASTM E 814 or UL 1479, except that T Ratings are not required for penetrations smaller than or equal to a 100 mm nominal pipe or 0.01 square meter in overall cross sectional area. Fire resistance ratings shall be the following:

a. Penetrations of Fire Resistance Rated Partitions: F Rating = 1 hour, T Rating = 1 hour.

b. Penetrations of Fire Resistance Rated Floors: F Rating = 1 hour, T Rating = 1 hour.

2.1.3.2 Construction Joints and Gaps

Fire resistance ratings of construction joints, as described in paragraph GENERAL REQUIREMENTS, and gaps such as those between floor slabs shall be as follows: construction joints in walls, 1 hour; gaps between top of the walls and the bottom of decks, 1 hour.

PART 3 EXECUTION

3.1 PREPARATION

Areas to receive firestopping shall be free of dirt, grease, oil, or loose materials which may affect the fitting or fire resistance of the firestopping system.

3.2 INSTALLATION

Firestopping material shall completely fill void spaces regardless of geometric configuration, subject to tolerance established by the manufacturer. Firestopping for filling floor voids 100 mm or more in any direction shall be capable of supporting the same load as the floor is designed to support or shall be protected by a permanent barrier to prevent loading or traffic in the firestopped area. Firestopping shall be installed in accordance with manufacturer's written instructions. Firestopping shall be provided in the following locations, except in floor slabs on grade:

a. Penetrations of duct, conduit, tubing, cable and pipe through floors and through fire-resistance rated partitions.

b. Penetrations of vertical shafts such as pipe chases, and utility chutes.

c. Omitted

d. Gaps at perimeter of fire-resistance rated partitions, such as between the top of the walls and the bottom of decks.

e. Construction joints in floors and fire rated partitions.

f. Other locations where required to maintain fire resistance rating of the construction.

END OF SECTION

SECTION 07900

JOINT SEALING

PART 1 GENERAL

1.1 REFERENCES

The publications listed below form a part of this specification to the extent referenced. The publications are referred to in the text by basic designation only.

AMERICAN SOCIETY FOR TESTING AND MATERIALS (ASTM)

ASTM C 509	(1994) Elastomeric Cellular Preformed Gasket and Sealing Material
ASTM C 570	(1994) Oil- and Resin-Base Caulking Compound for Building Construction
ASTM C 734	(1993) Low-Temperature Flexibility of Latex Sealants After Artificial Weathering
ASTM C 920	(1987) Elastomeric Joint Sealants
ASTM D 217	(1994) Cone Penetration of Lubricating Grease
ASTM D 1056	(1991) Flexible Cellular Materials - Sponge or Expanded Rubber
ASTM E 84	(1995) Surface Burning Characteristics of Building Materials

1.2 SUBMITTALS

Government approval is required for submittals with a "GA" designation; submittals having an "FIO" designation are for information only. The following shall be submitted in accordance with Section 01330 SUBMITTAL PROCEDURES:

SD-01 Data

Backing; FIO. Bond-Breaker; FIO. Sealant; FIO.

Manufacturer's descriptive data including storage requirements, shelf life, curing time, instructions for mixing and application, and primer data (if required). A copy of the Material Safety Data Sheet shall be provided for each solvent, primer or sealant material.

SD-13 Certificates

Sealant; FIO.

Certificates of compliance stating that the materials conform to the specified requirements.

1.3 ENVIRONMENTAL REQUIREMENTS

The ambient temperature shall be within the limits of 4 to 32 degrees C when the sealants are applied.

1.4 DELIVERY AND STORAGE

Materials shall be delivered to the job in the manufacturer's original unopened containers. The container label or accompanying data sheet shall include the following information as applicable: manufacturer, name of material, formula or specification number, lot number, color, date of manufacture, mixing instructions, shelf life, and curing time at the standard conditions for laboratory tests. Materials shall be handled and stored to prevent inclusion of foreign materials. Materials shall be stored at temperatures between 4 and 32 degrees C unless otherwise specified by the manufacturer.

PART 2 PRODUCTS

2.1 BACKING

Backing shall be 25 to 33 percent oversize for closed cell and 40 to 50 percent oversize for open cell material, unless otherwise indicated.

2.1.1 Rubber Backing

Cellular rubber sponge backing shall be ASTM D 1056, Type 2, closed cell, Class A, round cross section.

2.1.2 Omitted

2.1.3 Synthetic Rubber Backing

Synthetic rubber backing shall be ASTM C 509, Option I, Type I preformed rods.

2.2 BOND-BREAKER

Bond-breaker shall be as recommended by the sealant manufacturer to prevent adhesion of the sealant to backing or to bottom of the joint.

2.3 PRIMER

Primer shall be non-staining type as recommended by sealant manufacturer for the application.

2.4 CAULKING

Oil- and resin-based caulking, shall be ASTM C 570, Type 1, Use G.

2.5 OMITTED

2.6 ELASTOMERIC SEALANTS

Elastomeric sealants shall conform to ASTM C 920 and the following:
Polysulfide Sealant: Polysulfide sealant, Type S or M, Grade NS, Class 25, Use NT, M, G, A or O as required.

2.7 ACOUSTICAL SEALANT

Rubber or polymer-based acoustical sealant shall have a flame spread of 25 or less and a smoke developed rating of 50 or less when tested in accordance with ASTM E 84. Acoustical sealant shall have a consistency of 250 to 310 when tested in accordance with ASTM D 217, and shall remain flexible and adhesive after 500 hours of accelerated weathering as specified in ASTM C 734, and shall be non-staining.

2.8 OMITTED

2.9 OMITTED

2.10 SOLVENTS AND CLEANING AGENTS

Solvents, cleaning agents, and accessory materials shall be provided as recommended by the manufacturer.

PART 3 EXECUTION

3.1 GENERAL

3.1.1 Surface Preparation

The surfaces of joints to be sealed shall be dry. Oil, grease, dirt, chalk, particles of mortar, dust, loose rust, loose mill scale, and other foreign substances shall be removed from surfaces of joints to be in contact with the sealant. Oil and grease shall be removed with solvent and surfaces shall be wiped dry with clean cloths.

3.1.2 Concrete and Masonry Surfaces

Where surfaces have been treated with curing compounds, oil, or other such materials, the materials shall be removed by sandblasting or wire brushing. Laitance, efflorescence and loose mortar shall be removed from the joint cavity.

3.1.3 Steel Surfaces

Steel surfaces to be in contact with sealant shall be sandblasted or, if sandblasting would not be practical or would damage adjacent finish work, the metal shall be scraped and wire brushed to remove loose mill

scale. Protective coatings on steel surfaces shall be removed by sandblasting or by a solvent that leaves no residue.

3.1.4 Aluminum Surfaces

Aluminum surfaces to be in contact with sealants shall be cleaned of temporary protective coatings. When masking tape is used for a protective cover, the tape and any residual adhesive shall be removed just prior to applying the sealant. Solvents used to remove protective coating shall be as recommended by the manufacturer of the aluminum work and shall be non-staining.

3.2 APPLICATION

3.2.1 Masking Tape

Masking tape may be placed on the finish surface on one or both sides of a joint cavity to protect adjacent finish surfaces from primer or sealant smears. Masking tape shall be removed within 10 minutes after joint has been filled and tooled.

3.2.2 Backing

Backing shall be installed to provide the indicated sealant depth. The installation tool shall be shaped to avoid puncturing the backing.

3.2.3 Bond-Breaker

Bond-breaker shall be applied to fully cover the bottom of the joint without contaminating the sides where sealant adhesion is required.

3.2.4 Primer

Primer shall be used on concrete masonry units or other porous surfaces in accordance with instructions furnished with the sealant. Primer shall be applied to the joint surfaces to be sealed. Surfaces adjacent to joints shall not be primed.

3.2.5 Sealant

Sealant shall be used before expiration of shelf life. Multi-component sealants shall be mixed according to manufacturer's printed instructions. Sealant in guns shall be applied with a nozzle of proper size to fit the width of joint. Joints shall be sealed as detailed in the drawings. Sealant shall be forced into joints with sufficient pressure to expel air and fill the groove solidly. Sealant shall be installed to the indicated depth without displacing the backing. Unless otherwise indicated, specified, or recommended by the manufacturer, the installed sealant shall be tooled so that the surface is uniformly smooth and free of wrinkles and to assure full adhesion to the sides of the joint. Sealants shall be installed free of air pockets, foreign embedded matter, ridges and sags. Sealer shall be applied over the sealant when and as specified by the sealant manufacturer.

3.3 CLEANING

The surfaces adjoining the sealed joints shall be cleaned of smears and other soiling resulting from the sealant application as work progresses.

END OF SECTION

This page intentionally blank

SECTION 08110

STEEL DOORS AND FRAMES

PART 1 GENERAL

1.1 REFERENCES

The publications listed below form a part of this specification to the extent referenced. The publications are referred to in the text by basic designation only.

AMERICAN SOCIETY FOR TESTING AND MATERIALS (ASTM)

ASTM C 236	(1989; R 1993) Steady-State Thermal Performance of Building Assemblies by Means of a Guarded Hot Box
ASTM C 976	(1990) Thermal Performance of Building Assemblies by Means of a Calibrated Hot Box
ASTM D 2863	(1991) Measuring the Minimum Oxygen Concentration to Support Candle-Like Combustion of Plastics (Oxygen Index)
ASTM E 152	(1981a) Fire Tests of Door Assemblies
ASTM E 283	(1991) Determining the Rate of Air Leakage Through Exterior Windows, Curtain Walls, and Doors Under Specified Pressure Differences Across the Specimen

DOOR AND HARDWARE INSTITUTE (DHI)

DHI-A115.IG	(1994) Installation Guide for Doors and Hardware

NATIONAL FIRE PROTECTION ASSOCIATION (NFPA)

NFPA 80	(1992) Fire Doors and Windows
NFPA 80A	(1993) Protection of Buildings from Exterior Fire Exposures
NFPA 101	(1994) Safety to Life from Fire in Buildings and Structures

STEEL DOOR INSTITUTE (SDOI)

SDOI SDI-100	(1991) Standard Steel Doors and Frames
SDOI SDI-106	(1991) Standard Door Type Nomenclature
SDOI SDI-107	(1984) Hardware on Steel Doors (Reinforcement Application)

1.2 SUBMITTALS

Government approval is required for submittals with a "GA" designation; submittals having an "FIO" designation are for information only. The following shall be submitted in accordance with Section 01330 SUBMITTAL PROCEDURES:

SD-04 Drawings

Steel Doors and Frames; FIO.

Drawings using standard door type nomenclature in accordance with SDOI SDI-106 indicating the location of each door and frame, elevation of each model of door and frame, details of construction, method of assembling sections, location and extent of hardware reinforcement, hardware locations, type and location of anchors for frames, and thicknesses of metal. Drawings shall include catalog cuts or descriptive data for the doors, frames, and weatherstripping including air infiltration data and manufacturers printed instructions.

SD-09 Reports

Fire Rated Doors; FIO.

A letter by a nationally recognized testing laboratory which identifies the product manufacturer, type, and model; certifying that the laboratory has tested a sample assembly in accordance with ASTM E 152 and issued a current listing for same.

SD-13 Certificates

Thermal Insulated Doors; FIO.

Certification of Thermal Insulating Rating: Certification or test report for thermal insulated doors shall show compliance with the specified requirements. The certification, or test report, shall list the parameters and the type of hardware and perimeter seals used to achieve the rating.

SD-14 Samples

Steel Doors and Frames; FIO.

Manufacturer's standard color samples of factory applied finishes.

1.3 DELIVERY AND STORAGE

During shipment, welded unit type frames shall be strapped together in pairs with heads at opposite ends or shall be provided with temporary steel spreaders at the bottom of each frame; and knockdown type frames shall be securely strapped in bundles. Materials shall be delivered to the site in undamaged condition, and stored out of contact with the ground and under a weathertight covering permitting air circulation. Doors and assembled frames shall be stored in an upright position in accordance with DHI-A115.IG. Abraded, scarred, or rusty areas shall be cleaned and touched up with matching finishes.

1.4 WARRANTY

Manufacturer's standard performance guarantees or warranties that extend beyond a 1 year period shall be provided.

PART 2 PRODUCTS

2.1 DOORS AND FRAMES

Doors and frames shall be factory fabricated in accordance with SDOI SDI 100 and the additional requirements specified herein. Door grade shall be heavy duty Grade II unless otherwise indicated on the door and door frame schedules. Exterior doors and frames shall be designation A40 galvanized. Doors and frames shall be prepared to receive hardware conforming to the templates and information provided under Section 08700 BUILDERS' HARDWARE. Doors and frames shall be reinforced, drilled, and tapped to receive mortised hinges, locks, latches, and flush bolts as required. Doors and frames shall be reinforced for surface applied hardware. Frames shall be welded type. Door frames shall be furnished with a minimum of three jamb anchors and one floor anchor per jamb. Anchors shall be not less than 1.2 mm steel or 4.5 mm diameter wire. For wall conditions that do not allow the use of a floor anchor, an additional jamb anchor shall be provided. Rubber silencers shall be furnished for installation into factory predrilled holes in door frames; adhesively applied silencers are not acceptable. Full glass doors shall conform to SDOI SDI 100, Model 3, and shall include provisions for glazing. Reinforcing of door assemblies for closers and other required hardware shall be in accordance with SDOI SDI-100 and the conditions of the fire door assembly listing when applicable. Exterior doors shall have top edges closed flush and sealed against water penetration.

2.2 FIRE RATED DOORS

Fire rated door assemblies shall bear the listing identification label of a nationally recognized testing laboratory qualified to perform tests of fire door assemblies in accordance with ASTM E 152 and having a listing for the tested assemblies. The fire resistance rating shall be as shown. Listing identification labels shall be constructed and permanently applied by a method which results in their destruction should they be removed.

2.3 THERMAL INSULATED DOORS

The interior of thermal insulated doors shall be completely filled with rigid plastic foam permanently bonded to each face panel. The thermal conductance (U value) through the door shall not exceed 2.33 W/sq m times K when tested as an operational assembly in accordance with ASTM C 236 or ASTM C 976. Doors with cellular plastic cores shall have a minimum oxygen index rating of 22 percent when tested in accordance with ASTM D 2863.

2.4 OMITTED

2.5 OMITTED

2.6 WEATHERSTRIPPING

Unless otherwise specified in Section 08700 BUILDERS' HARDWARE, weatherstripping shall be as follows: Weatherstripping for head and jamb shall be manufacturer's standard elastomeric type of synthetic rubber, vinyl, or neoprene and shall be installed at the factory or on the jobsite in accordance with the door frame manufacturer's recommendations. Weatherstripping for bottom of doors shall be as shown. Air leakage rate of weatherstripping shall not exceed 0.31 l/s per linear meter of crack when tested in accordance with ASTM E 283 at standard test conditions.

2.7 OMITTED

2.8 OMITTED

2.9 GLAZING

Glazing shall be as specified in Section 08810 GLASS AND GLAZING. Removable glazing beads shall be screw on or snap on type. All glass and glazing in fire rated doors shall meet NFPA 80 sections 2-7.1.2, 2-72.3 and 8-2.3.

2.10 FACTORY FINISH

Doors and frames shall be phosphatized and primed with standard factory primer system.

PART 3 EXECUTION

3.1 INSTALLATION

Installation shall be in accordance with DHI A115.IG. Preparation for surface applied hardware shall be in accordance with SDOI SDI-107. Rubber silencers shall be installed in door frames after finish painting has been completed; adhesively applied silencers are not acceptable. Weatherstripping shall be installed at exterior door openings to provide a weathertight installation. Installation and operational characteristics of fire doors shall be in accordance with NFPA 80, NFPA 80A and NFPA 101. Hollow metal door frames shall be solid grouted in masonry walls.

3.1.1 Thermal Insulated Doors

Hardware and perimeter seals shall be adjusted for proper operation. Doors shall be sealed weathertight after installation of hardware and shall be in accordance with Section 07900 JOINT SEALING.

3.2 FIELD PAINTED FINISH

Steel doors and frames shall be field painted in accordance with Section 09900 PAINTING, GENERAL. Weatherstrips shall be protected from paint. Finish shall be free of scratches or other blemishes. Color shall be in accordance with Section ~~09915 COLOR SCHEDULE~~ 00860, Part II.

END OF SECTION

SECTION 08210

WOOD DOORS

PART 1 GENERAL

1.1 REFERENCES

The publications listed below form a part of this specification to the extent referenced. The publications are referred to in the text by basic designation only.

ARCHITECTURAL WOODWORK INSTITUTE (AWI)

AWI-02	(1994) Architectural Woodwork Quality Standards, Guide Specifications and Quality Certification Program

NATIONAL FIRE PROTECTION ASSOCIATION (NFPA)

NFPA 80	(1999) Fire Doors and Windows
NFPA 101	(1997) Safety to Life from Fire in Buildings and Structures
NFPA 251	Fire Test, Building Construction and Materials
NFPA 252	Fire Test of Door Assemblies
NFPA 257	Window Assemblies

NATIONAL WOOD WINDOW & DOOR ASSOCIATION (NWWDA)

NWWDA I.S. 1-A	(1993) Architectural Wood Flush Doors

1.2 GENERAL REQUIREMENTS

1.2.1 Standard Products

Doors shall be of the type, size, and design indicated on the drawings, and shall be the standard products of manufacturers regularly engaged in the manufacture of wood doors.

1.2.2 Marking

Each door shall bear a stamp, brand, or other identifying mark indicating quality and construction of the door. The identifying mark or a separate certification shall include identification of the standard on which construction of the door is based, identity of the manufacturing plant, identification of the standard under which preservative treatment, if used, was made, and identification of the doors having a Type I glue bond.

1.3 SUBMITTALS

Government approval is required for submittals with a "GA" designation; submittals having an "FIO" designation are for information only. The following shall be submitted in accordance with Section 01330 SUBMITTAL PROCEDURES:

SD-04 Drawings

Wood Doors; FIO.

Drawings indicating the location of each door, elevation of each type of door, details of construction, marks to be used to identify the doors, and location and extent of hardware blocking. Drawings shall include catalog cuts or descriptive data for doors, weatherstripping, and thresholds to be used.

SD-06 Instructions

Fire Doors; FIO.

Manufacturers preprinted installation and touch-up instructions.

SD-14 Samples

Factory Coated Natural Finish; FIO.

Samples of factory applied natural finish.

1.4 STORAGE

Doors shall be stored in fully covered areas and protected from damage and from extremes in temperature and humidity. Doors shall be stored on supports to prevent warping or twisting, and to provide ventilation. Factory cartons or wrappers shall be kept intact until installation.

1.5 HARDWARE

Hardware, including weatherstripping and thresholds, is specified in Section 08700 BUILDERS' HARDWARE.

1.6 GLAZING

Glazing is specified in Section 08810 GLASS AND GLAZING.

1.7 WARRANTY

Manufacturer's standard performance guarantees or warranties that extend beyond a 1 year period shall be provided.

PART 2 PRODUCTS

2.1 GENERAL FABRICATION REQUIREMENTS

2.1.1 Edge Sealing

Wood end-grain exposed at edges of doors shall be sealed prior to shipment.

2.1.2 Omitted

2.1.3 Adhesives

Adhesives shall be in accordance with NWWDA I.S. 1-A, requirements for Type II Bond Doors (water-repellent) for interior doors. Adhesive for doors to receive a transparent finish shall be nonstaining.

2.1.4 Prefitting

Doors shall be furnished prefitted or unfitted at the option of the Contractor.

2.2 FLUSH DOORS

Flush doors shall be solid core and shall conform to NWWDA I.S. 1-A, except for the 1 year acclimazation requirement in paragraph T-2, which shall not apply. Wood doors shall be 5-ply construction with faces, stiles, and rails bonded to the cores.

2.2.1 Core Construction

2.2.1.1 Solid Cores

Door construction shall be glued wood block core or particle board core with vertical and horizontal edges bonded to the core. Blocking and hardware reinforcements for particle board core doors shall be blocking option HB-1-5, HB-2-5 and HB-4 in accordance with NWWDA I.S. 1-A.

2.2.2 Face Panels

2.2.2.1 Natural Finished Wood Veneer Doors

Veneer doors to receive natural finish shall be Premium Grade, book matched red oak or white oak veneer in accordance with NWWDA I.S. 1-A. Vertical stile strips shall be selected to provide edges of the same species and/or color as the face veneer. Door finish shall be in accordance with paragraph FINISHING.

2.3 OMITTED

2.4 FIRE RATED DOORS

Fire rated door assemblies shall bear the listing identification label of a nationally recognized testing laboratory qualified to perform tests of fire door assemblies and shall meet the requirements of NFPA 251, 252 and 257 IAW public law 104.113, National Technology Transfer Act of 1996, Section 12(D). The specific time interval rating on the labels shall be as shown. Door assemblies shall be in accordance with NFPA 80. Listing identification on labels shall be constructed and permanently applied by a method which

results in their destruction should they be removed. Fire rated doors shall be mineral core for 45- and 60-minute rating and particleboard core or staved lumber core for 20- and 30-minute rating.

2.4.1 Reinforcement Blocking

Fire rated doors shall be provided, as required, with hardware reinforcement blocking, and top, bottom, and intermediate rail blocking. Lock blocks shall be manufacturer's standard. Reinforcement blocking shall be in compliance with the manufacturer's labeling requirements. Reinforcement blocking shall not be of mineral material.

2.4.2 Stile Edges

Composite fire rated doors shall be provided with vertical stile edges that do not contain fire retardant salts. Vertical stiles shall be of the same species and/or color as the face veneer.

2.5 OMITTED

2.6 INSERT LOUVERS

Where indicated, doors shall be provided with sightproof insert louvers. Louvers shall be stationary or adjustable as shown. Blades shall be welded or tenoned to the frame and the entire assembly fastened to the door with metal or wood moldings on both sides as shown. The frame shall be nonremovable from the outside of the door.

2.7 OMITTED

2.8 FINISHING

2.8.1 Factory Coated Natural Finish

Doors indicated to receive factory coated natural finish shall be given a transparent finish conforming to AWI-02, Section 1500, Premium Grade, medium stain, medium rubbed sheen, open grain effect. Finish shall be AWI factory finish system Number TR3 or TR4. Color of the natural finish shall be in accordance with Section ~~09915 COLOR SCHEDULE~~ 00860, Part II. Edges of unfitted doors shall be field finished after fitting to the frames.

PART 3 EXECUTION

3.1 INSTALLATION OF DOORS

3.1.1 General Use Doors

Doors shall be fit, hung, and trimmed as required. Door shall have a clearance of 3 mm at the sides and top and shall have a bottom clearance of 6 mm over thresholds and 13 mm at other locations unless otherwise shown. The lock edge or both edges of doors shall be beveled at the rate of 3 mm in 50 mm. Cuts made on the job shall be sealed immediately after cutting, using a clear varnish or sealer compatible with the factory finish. Bottom of doors shall be undercut to allow clear door swing over carpeted areas. Vertical

edges of doors which have not been rounded or beveled at the factory shall be eased when the doors are installed.

3.1.2 Fire Doors

Installation, hardware, and operational characteristics shall conform to NFPA 80 and NFPA 101 and shall be in strict conformance with the manufacturer's printed instructions. Properly sized pilot holes shall be drilled for screws in door edges. Factory applied labels shall remain intact where installed. Labeled hinge stile edge and top edge of door shall not be trimmed. Lockstile edge and bottom edge may be trimmed only to the extent recommended by the door manufacturer.

END OF SECTION

This page intentionally blank

SECTION 08520

ALUMINUM WINDOWS

PART 1 GENERAL

1.1 REFERENCES

The publications listed below form a part of this specification to the extent referenced. The publications are referred to in the text by basic designation only.

AMERICAN ARCHITECTURAL MANUFACTURERS ASSOCIATION (AAMA)

AAMA 101	(1993) Voluntary Specifications for Aluminum and Poly(Vinyl Chloride) (PVC) Prime Windows and Glass Doors
AAMA 603.8	(1992) Voluntary Performance Requirements and Test Procedures for Pigmented Organic Coatings on Extruded Aluminum
AAMA 1503.1	(1988) Voluntary Test Method for Thermal Transmittance and Condensation Resistance of Windows, Doors and Glazed Wall Sections

AMERICAN SOCIETY FOR TESTING AND MATERIALS (ASTM)

ASTM E 283	(1991) Determining the Rate of Air Leakage Through Exterior Windows, Curtain Walls, and Doors Under Specified Pressure Differences Across the Specimen
ASTM E 330	(1990) Structural Performance of Exterior Windows, Curtain Walls, and Doors by Uniform Static Air Pressure Difference
ASTM E 547	(1993) Water Penetration of Exterior Windows, Curtain Walls, and Doors by Cyclic Static Air Pressure Differential

INSECT SCREENING WEAVERS ASSOCIATION (ISWA)

ISWA IWS 089	(1990) Recommended Standards and Specifications for Insect Wire Screening (Wire Fabric)

SCREEN MANUFACTURERS ASSOCIATION (SMA)

SMA 1004	(1987) Aluminum Tubular Frame Screens for Windows

1.2 WINDOW PERFORMANCE

Aluminum windows shall be designed to meet the following performance requirements. Testing requirements shall be performed by an independent testing laboratory or agency.

1.2.1 Structural Performance

Structural test pressures on window units shall be for positive load (inward) and negative load (outward) in accordance with ASTM E 330. After testing, there shall be no glass breakage, permanent damage to fasteners, hardware parts, support arms or actuating mechanisms or any other damage which could cause window to be inoperable. There shall be no permanent deformation of any main frame, sash or ventilator member in excess of the requirements established by AAMA 101 for the window types and classification specified in this section.

1.2.2 Air Infiltration

Air infiltration shall not exceed the amount established by AAMA 101 for each window type when tested in accordance with ASTM E 283.

1.2.3 Water Penetration

Water penetration shall not exceed the amount established by AAMA 101 for each window type when tested in accordance with ASTM E 547.

1.2.4 Thermal Performance

Thermal transmittance for thermally broken aluminum windows with insulating glass shall not exceed R-Value Class 0.59 m/W (R3.33 0.44 m k/Q (R2.5) when tested in accordance with AAMA 1503.1.

1.3 SUBMITTALS

Government approval is required for submittals with a "GA" designation; submittals having an "FIO" designation are for information only. The following shall be submitted in accordance with Section 01330 SUBMITTAL PROCEDURES:

SD-01 Data

Aluminum Windows; FIO.

Manufacturer's descriptive data and catalog cut sheets.

SD-04 Drawings

Aluminum Windows; FIO. Insect Screens; FIO.

Drawings indicating elevations of window, rough-opening dimensions for each type and size of window, full size sections, thicknesses of metal, fastenings, methods of installation and anchorage, connections with other work, type of wall construction, size and spacing of anchors, method of glazing, types and locations of operating hardware, mullion details, weatherstripping details, screen details including method of attachment, and window schedules showing locations of each window type.

SD-06 Instructions

Aluminum Windows; FIO.

Manufacturer's preprinted installation instructions and cleaning instructions.

SD-09 Reports

Aluminum Windows; FIO.

Reports for each type of aluminum window attesting that identical windows have been tested and meet all performance requirements established under paragraph WINDOW PERFORMANCE.

SD-13 Certificates

Aluminum Windows; FIO.

Certificates stating that the aluminum windows are AAMA certified conforming to requirements of this section. Labels or markings permanently affixed to the window will be accepted in lieu of certificates.

SD-14 Samples

Aluminum Windows; FIO.

Manufacturer's standard color samples of the specified finishes.

1.4 QUALIFICATION

Window manufacturer shall specialize in designing and manufacturing the type of aluminum windows specified in this section, and shall have a minimum of 5 years of documented successful experience. Manufacturer shall have the facilities capable of meeting contract requirements, single-source responsibility and warranty.

1.5 OMITTED

1.6 DELIVERY AND STORAGE

Aluminum windows shall be delivered to project site and stored in accordance with manufacturer's recommendations. Damaged windows shall be replaced with new windows.

1.7 WARRANTY

Manufacturer's standard performance guarantees or warranties that extend beyond a 1 year period shall be provided.

PART 2 PRODUCTS

2.1 ALUMINUM WINDOW TYPES

Aluminum windows shall consist of complete units including sash, glass, frame, weatherstripping, insect screen, and hardware. Windows shall conform to AAMA 101. Windows shall be double-glazed and shall have a minimum condensation resistance factor of 51 when tested in accordance with AAMA 1503.1. Operable windows shall permit cleaning the outside glass from inside the building.

2.1.1 Omitted

2.1.2 Omitted

2.1.3 Single-Hung Windows

Aluminum single-hung windows shall conform to AAMA 101 DH-HC40 type which operate vertically with the weight of sash offset by a counterbalancing mechanism mounted in window to hold the sash stationary at any open position. Windows shall be provided with a tilt-in sash. Single-hung windows shall be provided with sweep locking devices to secure the sash in the closed position. Counterbalancing mechanisms shall be easily replaced after installation.

2.2 WEATHERSTRIPPING

Weatherstripping for ventilating sections shall be of type designed to meet water penetration and air infiltration requirements specified in this section in accordance with AAMA 101, and shall be manufactured of material compatible with aluminum and resistant to weather. Weatherstrips shall be factory-applied and easily replaced in the field. Neoprene or polyvinylchloride weatherstripping are not acceptable where exposed to direct sunlight.

2.3 INSECT SCREENS

Insect screens shall be aluminum window manufacturer's standard design, and shall be provided where scheduled on drawings. Insect screens shall be fabricated of roll-formed tubular-shaped aluminum frames

conforming to SMA 1004 and (18 by 16) aluminum mesh screening conforming with ISWA IWS 089, Type III.

2.4 ACCESSORIES

2.4.1 Fasteners

Fastening devices shall be window manufacturer's standard design made from aluminum, non magnetic stainless steel, cadmium plated steel, nickel/chrome plated steel or magnetic stainless steel in compliance with AAMA 101. Self-tapping sheet metal screws will not be acceptable for material thicker than 2 mm.

2.4.2 Hardware

Hardware shall be as specified for each window type and shall be fabricated of aluminum, stainless steel, cadmium plated steel, zinc plated steel or nickel/chrome-plated steel of quality established by AAMA 101.

2.4.3 Window Anchors

Anchoring devices for installing windows shall be made of aluminum, cadmium plated steel, stainless steel, or zinc-plated steel conforming to AAMA 101.

2.5 GLASS AND GLAZING

Aluminum windows shall be designed for inside glazing, field glazing, and for glass types scheduled on drawings and specified in Section 08810 GLASS AND GLAZING. Units shall be complete with glass and glazing provisions to meet AAMA 101. Glazing material shall be compatible with aluminum, and shall not require painting.

2.6 FINISH

2.6.1 Omitted

2.6.2 Baked-Acrylic Resin-Based Coating

Exposed surfaces of aluminum windows shall be finished with acrylic resin-based coating conforming to AAMA 603.8, total dry thickness of 0.025 mm (1.0 mil). Finish shall be free of scratches and other blemishes.

2.6.3 Omitted

2.6.4 Color

Color shall be in accordance with COLOR SCHEDULE shown on the drawings.

PART 3 EXECUTION

3.1 INSTALLATION

Aluminum windows shall be installed in accordance with approved shop drawings and manufacturer's published instructions. Aluminum surfaces in contact with masonry, concrete, wood and dissimilar metals other than stainless steel, zinc, cadmium or small areas of white bronze, shall be protected from direct contact using protective materials recommended by AAMA 101. The completed window installation shall be watertight in accordance with Section 07900 JOINT SEALING. Glass and glazing shall be installed in accordance with requirements of this section and Section 08810 GLASS AND GLAZING.

3.2 ADJUSTMENTS AND CLEANING

3.2.1 Hardware Adjustments

Final operating adjustments shall be made after glazing work is complete. Operating sash or ventilators shall operate smoothly and shall be weathertight when in locked position.

3.2.2 Cleaning

Aluminum window finish and glass shall be cleaned on exterior and interior sides in accordance with window manufacturer's recommendations. Alkaline or abrasive agents shall not be used. Precautions shall be taken to avoid scratching or marring window finish and glass surfaces.

END OF SECTION

SECTION 08700

BUILDERS' HARDWARE

PART 1 GENERAL

1.1 REFERENCES

The publications listed below form a part of this specification to the extent referenced. The publications are referred to in the text by basic designation only.

AMERICAN SOCIETY FOR TESTING AND MATERIALS (ASTM)

ASTM E 283	(1991) Determining the Rate of Air Leakage Through Exterior Windows, Curtain Walls and Doors Under Specified Pressure Differences Across the Specimen

BUILDERS HARDWARE MANUFACTURERS ASSOCIATION (BHMA)

BHMA-01	(Effective thru Jun 1995) Directory of Certified Locks & Latches
BHMA-02	(Effective thru Jul 1995) Directory of Certified Door Closers
BHMA-03	(Effective thru Jul 1996) Directory of Certified Exit Devices
BHMA A156.1	(1988) Butts and Hinges
BHMA A156.2	(1989) Bored and Preassembled Locks and Latches
BHMA A156.3	(1994) Exit Devices
BHMA A156.4	(1992) Door Controls - Closers
BHMA A156.5	(1992) Auxiliary Locks & Associated Products
BHMA A156.6	(1994) Architectural Door Trim
BHMA A156.7	(1988) Template Hinge Dimensions
BHMA A156.8	(1994) Door Controls - Overhead Holders
BHMA A156.13	(1994) Mortise Locks & Latches
BHMA A156.15	(1995) Closer Holder Release Devices
BHMA A156.16	(1989) Auxiliary Hardware

BHMA A156.17 (1993) Self Closing Hinges & Pivots

BHMA A156.18 (1993) Materials and Finishes

BHMA A156.21 (1989) Thresholds

DOOR AND HARDWARE INSTITUTE (DHI)

DHI-03 (1989) Keying Systems and Nomenclature

DHI-04 (1976) Recommended Locations for Builders' Hardware for Custom Steel Doors and Frames

DHI-05 (1990) Recommended Locations for Architectural Hardware for Standard Steel Doors and Frames

DHI-A115.IG (1994) Installation Guide for Doors and Hardware

DHI A115-W (Varies) Wood Door Hardware Standards (Incl All5-W1 thru A115-W9)

NATIONAL FIRE PROTECTION ASSOCIATION (NFPA)

NFPA 80 (1999) Fire Doors and Windows

NFPA 101 (1997) Safety to Life from Fire in Buildings and Structures

NFPA 105 (1999) Smoke Control Door Assemblies

1.2 SUBMITTALS

Government approval is required for submittals with a "GA" designation; submittals having an "FIO" designation are for information only. The following shall be submitted in accordance with Section 01330 SUBMITTAL PROCEDURES:

SD-01 Data

Hardware and Accessories; FIO.

Manufacturer's descriptive data, technical literature, catalog cuts, and installation instructions. Spare parts data for locksets, exit devices, closers, electric locking system, and electro magnetic closer holder release devices, after approval of the detail drawings, and not later than 1 month prior to the date of beneficial occupancy. The data shall include a complete list of parts and supplies, with current unit prices and source of supply.

SD-04 Drawings

Hardware Devices; GA.

Detail drawings for hardware devices for computerized keying systems, magnetic cards and other electrical hardware devices showing complete wiring and schematic diagrams and other details required to demonstrate proper function of units.

SD-07 Schedules

Hardware Schedule; FIO.

Hardware schedule listing all items to be furnished. The schedule shall include for each item: the quantities; manufacturer's name and catalog numbers; the ANSI number specified, sizes; detail information or catalog cuts; finishes; door and frame size and materials; location and hardware set identification cross-references to drawings; corresponding reference standard type number or function number from manufacturer's catalog if not covered by ANSI or BHMA; and list of abbreviations and template numbers.

Keying Schedule; GA.

Keying schedule developed in accordance with DHI 03, after the keying meeting with the user.

SD-13 Certificates

Hardware and Accessories; FIO.

The hardware manufacturer's certificates of compliance stating that the supplied material or hardware item meets specified requirements. Each certificate shall be signed by an official authorized to certify in behalf of the product manufacturer and shall identify quantity and date or dates of shipment or delivery to which the certificates apply. A statement that the proposed hardware items appear in BHMA-01, BHMA-02 and BHMA-03 directories of certified products may be submitted in lieu of certificates.

1.3 PREDELIVERY CONFERENCE

Upon approval of the Hardware Schedule, the construction Contractor shall arrange a conference with the hardware supplier, Contracting Officer and the using agency to determine keying system requirements. Location of the key control storage system, set-up and key identification labeling will also be determined.

1.4 DELIVERY, STORAGE, AND HANDLING

Hardware shall be delivered to the project site in the manufacturer's original packages. Each article of hardware shall be individually packaged in the manufacturer's standard commercial carton or container, and shall be properly marked or labeled to be readily identifiable with the approved hardware schedule. Each change key shall be tagged or otherwise identified with the door for which its cylinder is intended. Where double cylinder functions are used or where it is not obvious which is the key side of a door, appropriate instructions shall be included with the lock and on the hardware schedule. Manufacturer's printed installation instructions, fasteners, and special tools shall be included in each package.

1.5 SPECIAL TOOLS

Special tools, such as those supplied by the manufacturer, unique wrenches, and dogging keys, shall be provided as required to adjust hardware items.

1.6 WARRANTY

Manufacturer's standard performance guarantees or warranties that extend beyond a 1 year period shall be provided.

1.7 OPERATION AND MAINTENANCE MANUALS

Six complete copies of maintenance instructions listing routine maintenance procedures, possible breakdowns and repairs, and troubleshooting guides shall be provided. The instructions for electric and electro-magnetic closer holder release devices shall include simplified diagrams as installed.

PART 2 PRODUCTS

2.1 GENERAL HARDWARE REQUIREMENTS

Hardware shall conform to the requirements specified herein and the HARDWARE SETS listing at the end of this section. Hardware set numbers correspond to the set numbers shown on the drawings.

2.2 TEMPLATES

Requirements for hardware to be mounted on metal doors or metal frames shall be coordinated between hardware manufacturer and door or frame manufacturer by use of templates and other information to establish location, reinforcement required, size of holes, and similar details. Templates of hinges shall conform to BHMA A156.7.

2.3 HINGES

Hinges shall conform to BHMA A156.1. Hinges used on metal doors and frames shall also conform to BHMA A156.7. Except as otherwise specified, hinge sizes shall conform to the hinge manufacturer's printed recommendations.

2.3.1 Hinges for Reverse Bevel Doors with Locks

Hinges for reverse bevel doors with locks shall have pins that are made nonremovable by means such as a set screw in the barrel, or safety stud, when the door is in the closed position.

2.3.2 Contractor's Option

Hinges with antifriction bearings may be furnished in lieu of ball bearing hinges, except where prohibited for fire doors by the requirements of NFPA 80.

2.3.3 Omitted

2.3.4 Spring Hinges

Spring hinges shall conform to BHMA A156.17.

2.4 LOCKS AND LATCHES

To the maximum extent possible, locksets, latchsets and deadlocks shall be the products of a single manufacturer.

2.4.1 Mortise Lock and Latchsets

Mortise lock, latchsets, and strikes shall be series 1,000 and shall conform to BHMA A156.13, operational Grade 1. Mortise type locks and latches for
doors 44 mm thick and over shall have adjustable bevel fronts or otherwise conform to the shape of the door. Mortise locks shall have armored fronts.

2.4.2 Bored Lock and Latchsets

Bored lock, latchsets, and strikes shall be series 4,000 and shall conform to BHMA A156.2, Grade 1. Bored type locks and latches for doors 35 mm (1-3/8 inches) thick and over shall have adjustable bevel fronts or otherwise conform to the shape of the door.

2.4.3 Omitted

2.4.4 Auxiliary Locks and Associated Products

Bored and mortise dead locks and dead latches, narrow style dead locks and dead latches, rim latches, dead latches, and dead bolts shall conform to BHMA A156.5. Strike boxes shall be furnished with dead bolt and latch strikes for Grade 1.

2.4.5 Lock Cylinders (Mortise, Rim and Bored)

Lock cylinders shall comply with BHMA A156.5 and shall comply with Base keying requirements. Lock cylinder shall have not less than seven pins, shall have an “A” type keyway. Cylinders shall have key removable type cores. Contractor shall provide all door locking hardware to match the current bse locking system (Best, Falcon or equal). A master keying system shall be provided. Construction interchangeable cores shall be provided. Disassembly of knob or lockset shall not be required to remove core from lockset. All locksets and exit devices shall accept same interchangeable cores. Key control storage system shall be provided to the Contracting Officer.

2.4.6 Omitted

2.4.7 Omitted

2.4.8 Omitted

2.4.9 Lock Trim

Lock trim shall be cast, forged, or heavy wrought construction of commercial plain design. In addition to meeting the test requirement of BHMA A156.2 or BHMA A156.13, knobs, lever handles, roses, and escutcheons shall be 1.27 mm thick, if unreinforced. If reinforced, the outer shell shall be 0.89 mm thick and the combined thickness shall be 1.78 mm except that knob shanks shall be 1.52 mm. Knob diameter shall be 54 to 57 mm. Lever handles shall be of plain design with ends returned to no more than 10 mm from the door face.

2.4.10 Omitted

2.4.11 Electronic Locking System

The electronic locking system shall consist of a level handle battery powered magnetic striped card reader electro-mechanical mortised lockset conforming to BHMA A156.13, grade 1 for unlocking of doors, 386 minimum personal computer with monitor and standard printer, a full featured automatic encoder and software. The electronic locking system shall be fully compatible with the existing electronic locking system in use at the base which is the HT-24 series by TESA/Entry Systems, Inc.

2.5 EXIT DEVICES AND EXIT DEVICE ACCESSORIES

Exit devices and exit device accessories shall conform to BHMA A156.3, Grade 1.

2.5.1 Exit Devices and Auxiliary Items

Trim shall be of wrought construction and commercial plain design with straight, beveled, or smoothly rounded sides, corners, and edges. Adjustable strikes shall be provided for rim type and vertical rod devices. Open back strikes shall be provided for pairs of doors with mortise and vertical rod devices; except open back strikes shall be used on labeled doors only where specifically provided for in the published listings. Escutcheons shall be provided not less than 175 by 55 mm. Escutcheons shall be cut to suit cylinders and operating trim.

2.6 OMITTED

2.7 KEYING

Locks shall be keyed in sets or subsets as scheduled. Locks shall be furnished with the manufacturer's standard construction key system. Change keys for locks shall be stamped with change number and the inscription "U.S. Property - Do Not Duplicate." Keys shall be supplied as follows:

Locks:	3 change keys each lock.
Master keyed sets:	2 keys each set.
Construction keys:	10 total.
Blank keys:	150 total.

The keys shall be furnished to the Contracting Officer for key control system storage in sets or subsets as scheduled.

2.8 DOOR CLOSING DEVICES

Door closing devices shall conform to BHMA A156.4, Grade 1. Closing devices shall be products of one manufacturer for each type specified. The opening resistance of closing devices shall not exceed 67 N applied at the latch stile or exceed 22 N where low opening resistance is scheduled.

2.8.1 Surface Type Closers

Surface type closers shall be Grade 1, C02000 Full Cover with options PT-4H, Size 1 or 2 through Size 6, and PT-4D with back check position valve. Except as otherwise specified, sizes shall conform to the manufacturer's published recommendations. Closers for outswinging exterior doors shall have parallel arms or shall be top jamb mounted. Closers for doors close to a wall shall be of narrow projection so as not to strike the wall at the 90-degree open position. Finish shall be 690.

2.9 DOOR CONTROLS - OVERHEAD HOLDERS

Door controls - overhead holders shall conform to BHMA A156.8.

2.10 ELECTRO-MAGNETIC HOLDERS

Electro-magnetic door holders shall conform to BHMA A156.15 and shall release the door upon activation of the building fire alarm system or interruption of electric power.

2.11 OMITTED

2.12 ARCHITECTURAL DOOR TRIM

Architectural door trim shall conform to BHMA A156.6.

2.12.1 Door Protection Plates

2.12.1.1 Armor Plates

Armor plates shall be type stainless steel, 900 mm in height, and 50 mm less in width than the width of the door for single doors. Edges of metal plates shall be beveled.

2.12.1.2 Kick Plates

Kick plates shall be type stainless steel. Width of plates shall be 50 mm less than door width for single doors and 25 mm less for pairs of doors. Height shall be 400 mm, except where the bottom rail is less than 400 mm the plate shall extend to within 13 mm of the panel mold or glass bead. Edges of metal plates shall be beveled.

2.12.2 Omitted

2.12.3 Omitted

2.12.4 Omitted

2.12.5 Push and Pull Bars

Push and pull bars shall be Category J500, stainless steel. Edges of mounting plates shall be beveled.

2.13 AUXILIARY HARDWARE

Auxiliary hardware, consisting of surface mounted spring activated chain bolts, foot bolts, viewer, door holders, viewers and door stops shall conform to BHMA A156.16. Dust-proof strikes shall be Type L04011 for doors that are not fire rated.

2.14 MISCELLANEOUS

2.14.1 Omitted

2.14.2 Metal Thresholds

Thresholds shall conform to BHMA A156.21. Thresholds for exterior doors shall be extruded aluminum of the type indicated and shall provide proper clearance and an effective seal with specified weather stripping. Where required, thresholds shall be modified to receive projecting bolts of exit devices. Thresholds for doors accessible to the handicapped shall be beveled with slopes not exceeding 1:2 and with heights not exceeding 13 mm. Air leakage rate of weatherstripping shall not exceed 0.775 liters per second per lineal meter of crack when tested in accordance with ASTM E 283 at standard test conditions.

2.14.3 Rain Drips

Extruded aluminum, not less than 1.78 mm thick painted. Door sill rain drips shall be 38 mm to 44 mm high by 16 mm projection. Overhead rain drips shall be approximately 38 mm high by 63 mm projection and shall extend 50 mm on either side of the door opening width.

2.14.4 Aluminum Housed Type Weatherseals

Weatherseals of the type indicated shall consist of extruded aluminum retainers not less than 1.78 mm wall thickness with vinyl, neoprene, silicone rubber, polyurethane or vinyl brush inserts. Aluminum shall be clear (natural) anodized. Weatherseal material shall be of an industrial/commercial grade. Seals shall remain functional through all weather and temperature conditions. Air leakage rate of weatherstripping shall not exceed 0.775 liters per second per lineal meter of crack when tested in accordance with ASTM E 283 at standard test conditions.

2.14.5 Gasketing

Gasketing shall be a compression type seal, silicon based, self-adhesive product for use on steel door frames with steel. Color shall be bronze. Air leakage rate of weatherstripping shall not exceed 0.775 liters per second per lineal of crack when tested in accordance with ASTM E 283 at standard test conditions.

2.14.5.1 Smoke seals shall be installed on all fire rated doors, per NFPA 101.

2.14.6 Key Control Storage System

Key control storage system shall conform to BHMA A156.5, Type E8352, capacity as required, and shall be properly labeled for key identification. Set up, identification labeling and location of the key control storage shall be as directed at the Predelivery Conference.

2.15 FASTENINGS

Fastenings of proper type, size, quantity, and finish shall be supplied with each article of hardware. Machine screws and expansion shields shall be used for attaching hardware to concrete or masonry. Fastenings exposed to the weather in the finished work shall be of brass, bronze, or stainless steel. Sex bolts, through bolts, or machine screws and grommet nuts, where used on reverse-bevel exterior doors equipped with half-surface or full-surface hinges, shall employ one-way screws or other approved tamperproof screws. Screws for the jamb leaf of half-mortise and full-surface hinges attached to structural steel frames shall be one-way or other approved tamperproof type.

2.16 FINISHES

Unless otherwise specified, finishes shall conform to those identified in BHMA A156.18 and be 626 or 630 unless otherwise indicated. Where painting of primed surfaces is required, painting is specified in Section 09900 PAINTING, GENERAL.

2.17 HARDWARE FOR FIRE DOORS

Hardware for fire doors shall conform to the requirements of NFPA 80 and NFPA 101.

PART 3 EXECUTION

3.1 APPLICATION

Hardware shall be located in accordance with DHI-04 and DHI-05. When approved, slight variations in locations or dimensions will be permitted. Application shall be in accordance with DHI-A115.IG or DHI A115-W. Door control devices for exterior doors such as closers and holders, shall be attached to doors with thru bolts and nuts or sex bolts. Alternate fastening methods may be approved by the Contracting Officer when manufacturers' documentation is submitted to verify that the fastening devices and door reinforcements are adequate to resist wind induced stresses. Electric hardware items and access control devices shall be installed in accordance with manufacturer's printed installation procedures.

3.1.1 Hardware for Fire Doors

Hardware for fire doors shall be installed in accordance with the requirements of NFPA 80. Exit devices installed on fire doors shall have a visible label bearing the marking "Fire Exit Hardware". Other hardware installed on fire doors, such as locksets, closers, and hinges shall have a visible label or stamp indicating that the hardware items have been approved by an approved testing agency for installation on fire-rated doors. Hardware for smoke-control door assemblies shall be installed in accordance with NFPA 105.

3.1.2 Door-Closing Devices

Door-closing devices shall be installed and adjusted in accordance with the templates and printed instructions supplied by the manufacturer of the devices. Insofar as practicable, doors opening to or from halls and corridors shall have the closer mounted on the room side of the door.

3.1.3 Key Control Storage Systems

Key control storage system shall be furnished to the Contracting Officer.

3.1.4 Kick Plates

Kick plates shall be installed on the push side of single acting doors.

3.1.5 Auxiliary Hardware

Chain bolts shall be installed at the top and foot bolts shall be installed at the bottom of the inactive leaf of pairs of doors. The bottom bolt shall operate into a dust-proof floor strike or threshold.

3.1.6 Thresholds

Thresholds shall be secured with a minimum of three fasteners per single door width and six fasteners per double door width with a maximum spacing of 300 mm. Exterior thresholds shall be installed in a bed of sealant with expansion anchors and stainless steel screws, except that bronze or anodized bronze thresholds shall be installed with expansion anchors with brass screws. Minimum screw size shall be No. 10 length, dependent on job conditions, with a minimum of 19 mm thread engagement into the floor or anchoring device used.

3.1.7 Rain Drips

Door sill rain drips shall align with the bottom edge of the door. Overhead rain drips shall align with bottom edge of door frame rabbet. Drips shall be set in sealant and fastened with stainless steel screws.

3.1.8 Weatherseals

Weatherseals shall be located as indicated, snug to door face and fastened in place with color matched metal screws after door and frames have been finish painted. Screw spacing shall be as recommended by manufacturer.

3.1.9 Gasketing

Gasketing shall be installed at the inside edge of the hinge and head and latch sides of door frame. Frames shall be toleranced for a 3 mm clearance between door and frame. Frames shall be treated with tape primer prior to installation.

3.1.9.1 Install smoke seals to all fire rated doors.

3.2 OPERATIONAL TESTS

Prior to acceptance of any electrical hardware system, an operational test shall be performed to determine if devices are operating as intended by the specifications. Wiring shall be tested for correct voltage, current carrying capacity, and proper grounding. Stray voltages in lock wiring shall be eliminated to prevent locking devices from releasing in critical situations.

3.3 HARDWARE SETS

Building Entry Doors

HW-1	3	pr.	Hinges, A5111
	2	ea.	Exit Devices, Type 8, Function 04
	2	ea.	Closers, C02011
	2	ea.	Kick Plates, J102
	2	ea.	Stops, L02131
	1	ea.	Threshold, J32130
	1	ea.	Weatherstripping

Building Vestibule Doors

HW-2	3	pr.	Hinges, A5111
	2	ea.	Push/Pull Bar Set J504
	2	ea.	Closers, C02011
	2	ea.	Kick Plates, J102
	2	ea.	Stops, L02131

Stairway Exterior Doors

HW-3	1 1/2	pr.	Hinges, A5111
	1	ea.	Exit Devices, Type 3, Function 05
	1	ea.	Closers, C02011
	1	ea.	Kick Plates, J102
	1	ea.	Stops, L02131
	1	ea.	Threshold, J32130
	1	ea.	Weatherstripping

Mechanical Room Door

HW-4	3	pr.	Hinges, A5133
	1	ea.	Lockset F41
	1	ea.	Surface Mounted Chain Bolt
	1	ea.	Surface Mounted Foot Bolt
	1	ea.	Dustproof Strike L04021
	2	ea.	Overhead Holder, C08511
	1	ea.	Threshold, J32130
	1	ea.	Weatherstripping

Electrical Room Door

HW-5	1 1/2	pr.	Hinges, A5133
	1	ea.	Lockset F41
	1	ea.	Overhead Holder, C08511
	1	ea.	Threshold, J32130
	1	ea.	Weatherstripping

Stairway Interior Doors

HW-6	1 1/2	pr.	Hinges, A5111
	1	ea.	Lockset w/ Lever Handle F01
	1	ea.	Closers, C02011
	1	ea.	Kick Plates, J102
	1	ea.	Stops, L02141

Tel/Com Room Doors

HW-7	1 1/2	pr.	Hinges, A5133
	1	ea.	Lockset F41
	1	ea.	Stops, L02141

Laundry Room Doors

HW-8	1 1/2	pr.	Hinges, A5111
	1	ea.	Lockset w/ Lever Handle F01
	1	ea.	Closers, C02011
	1	ea.	Electro-Magnetic Holder C00011
	1	ea.	Kick Plates, J102
	1	ea.	Stops, L02141

Corridor Exit Door

HW-9	1 1/2	pr.	Hinges, A5111
	1	ea.	Lockset w/ Lever Handle F01
	1	ea.	Closers, C02011
	1	ea.	Kick Plates, J102
	1	ea.	Stops, L02141

Electrical Closet Doors

HW-10	3	pr.	Hinges, A5133
	1	ea.	Lockset F41
	1	ea.	Surface Mounted Chain Bolt
	1	ea.	Surface Mounted Foot Bolt
	1	ea.	Dustproof Strike L04021
	2	ea.	Stops, L02141

Module Closet/Miscellaneous Doors

HW-11	1 1/2	pr.	Hinges, A5133
	1	ea.	Lockset w/ Lever Handle F01
	1	ea.	Deadlock, E2151
	1	ea.	Stops, L02141

Public Toilet Door

HW-12	1 1/2	pr.	Hinges, A5133
	1	ea.	Lockset w/ Lever Handle F19
	1	ea.	Stops, L02141

Bulk/Storage Room Doors

HW-13	1 1/2	pr.	Hinges, A5111
	1	ea.	~~Lockset w/ Lever Handle F19~~ Electro-Mechanical Lockset w/Lever Handle
	1	ea.	Closers, C02011
	1	ea.	Stops, L02141

Module Entry Doors

HW-14	1 1/2	pr.	Spring Hinges, K801011
	1	ea.	Electro-Mechanical Lockset w/ Lever Handle
	1	ea.	Viewer, L03171
	1	ea.	Stops, L02141
	1	ea.	Door Viewer, L03071

Module Bathroom Doors

HW-15	1 1/2	pr.	Hinges, A5133
	1	ea.	Lockset F91, except key operated from sleeping room side only
	1	ea.	Deadlocking Latch Bolt E0181, except operated by turn from both sides
	1	ea.	Stops, L02141

END OF SECTION

This page intentionally blank

SECTION 08810

GLASS AND GLAZING

PART 1 GENERAL

1.1 REFERENCES

The publications listed below form a part of this specification to the extent referenced. The publications are referred to in the text by basic designation only.

AMERICAN SOCIETY FOR TESTING AND MATERIALS (ASTM)

ASTM C 509	(1994) Elastomeric Cellular Preformed Gasket and Sealing Material
ASTM C 864	(1993) Dense Elastomeric Seal Gaskets, Setting Blocks, and Spacers
ASTM C 920	(1987) Elastomeric Joint Sealants
ASTM C 1036	(1991) Flat Glass
ASTM C 1172	Laminated Architectural Flat Glass
ASTM D 395	(1989; R 1994) Rubber Property Compression Set
ASTM E 152	(1981a) Fire Tests of Door Assemblies
ASTM E 163	(1984) Fire Tests of Window Assemblies
ASTM E 773	(1988) Seal Durability of Sealed Insulating Glass Units
ASTM E 774	(1992) Sealed Insulating Glass Units

CODE OF FEDERAL REGULATIONS

16 CFR	Safety Standard for Architectural Glazing Materials

GLASS ASSOCIATION OF NORTH AMERICA (GANA)

GANA-01	(1990) Glazing Manual

NATIONAL FIRE PROTECTION ASSOCIATION (NFPA)

NFPA 80	(1992) Fire Doors and Windows

1.2 SUBMITTALS

Government approval is required for submittals with a "GA" designation; submittals having an "FIO" designation are for information only. The following shall be submitted in accordance with Section 01330 SUBMITTAL PROCEDURES:

SD-01 Data

Glass; FIO. Glazing Accessories; FIO.

Manufacturer's descriptive product data, handling and storage recommendations, installation instructions, and cleaning instructions.

SD-04 Drawings

Glazing Materials and Accessories; FIO.

Drawings showing complete details of the proposed setting methods, mullion details, edge blocking, size of openings, frame details, materials, and types and thickness of glass.

SD-13 Certificates

Glass; FIO.

Certificates stating that the glass meets the specified requirements. Labels or marking affixed to the glass will be accepted in lieu of certificates.

SD-14 Samples

Glass; FIO.

Two 203 by 254 mm samples of each of the following: insulating glass units.

1.3 SYSTEM DESCRIPTION

Glazing systems shall be fabricated and installed watertight and airtight to withstand thermal movement and wind loading without glass breakage, gasket failure, deterioration of glazing accessories, and defects in the work.

1.4 DELIVERY, STORAGE AND HANDLING

Glazing compounds shall be delivered to the site in the manufacturer's unopened containers. Glass shall be stored indoors in a safe, well ventilated dry location in accordance with manufacturer's instructions, and shall not be unpacked until needed for installation. Glass shall not be stored on site over 1 month.

1.5 PROJECT/SITE CONDITIONS

Glazing work shall not be started until outdoor temperature is above 5 degrees C and rising, unless procedures recommended by glass manufacturer and approved by Contracting Officer are made to warm the glass and rabbet surfaces. Ventilation shall be provided to prevent condensation of moisture on glazing work during installation. Glazing work shall not be performed during damp or raining weather.

1.6 WARRANTY

1.6.1 Insulating Glass

Manufacturer shall warrant the insulating glass to be free of fogging or film formation on the internal glass surfaces caused by failure of the hermetic seal for a period of 10 years from Date of Substantial Completion. Warranty shall be signed by manufacturer.

PART 2 PRODUCTS

2.1 FLOAT GLASS

2.1.1 Clear Annealed Glass

Annealed glass shall be Type I transparent flat type, Class 1 - clear, Quality q3 - glazing select conforming to ASTM C 1036.

2.2 ROLLED GLASS

2.2.1 Omitted

2.2.2 Wired Glass

Wired glass shall be Type II flat type, Class 1, Quality q8 - glazing, Form 1 - wired and polished both sides, conforming to ASTM C 1036. Wire mesh shall be polished stainless steel Mesh 1 - diamond. Wired glass for fire-rated windows shall bear an identifying UL label or the label of a nationally recognized testing agency, and shall be rated for 20 or 45 minutes when tested in accordance with ASTM E 163. Wired glass for fire-rated doors shall be tested as part of a door assembly in accordance with ASTM E 152.

2.3 INSULATING GLASS

Insulating glass shall be Class A preassembled units of dual-seal construction consisting of lites of glass separated by an aluminum spacer and dehydrated space conforming to ASTM E 773 and ASTM E 774. Aluminum spacer shall be roll-formed, with bent or tightly soldered joints to completely seal the spacer periphery and eliminate moisture and hydrocarbon vapor transmission into airspace through the corners. Primary seal shall be compressed polyisobutylene and the secondary seal shall be a specially formulated silicone. Glass types shall be as follows:

~~2.3.1 Omitted~~

~~2.3.2 Omitted~~

~~2.3.3 Omitted~~

~~2.3.4~~2.3.1 Low-E Insulating Glass

Interior and exterior glass panes for Low-E insulating units shall be Type I annealed flat glass, Class 1-clear with anti-reflective low-emissivity coating on No. 2 surface (inside surface of exterior pane), Quality q3 - glazing select, conforming to ASTM C 1036. Glass performance shall be U-Value/Winter Nighttime 0.32.

2.3.2 Laminated Glass

Laminated glass shall consist of two layers of Type I transparent float glass. Quality q3 - glazing select, conforming to ASTM C 1036. Glass shall be bonded together with 0.060 inch thick PVB interlayer under pressure, or alternatives such as resin laminates, conforming to requirements of 16 CFR 1201 and ASTM C 1172.

2.4 OMITTED

2.5 OMITTED

2.6 OMITTED

2.7 OMITTED

2.8 MIRRORS

2.8.1 Glass Mirrors

Glass for mirrors shall be Type I transparent flat type, Class 1, Glazing Quality q1 6 mm thick conforming to ASTM C 1036. Glass color shall be clear. Glass shall be coated on one surface with silver coating, copper protective coating, and mirror backing paint. Silver coating shall be highly adhesive pure silver coating of a thickness which shall provide reflectivity of 83 percent or more of incident light when viewed through 6 mm thick glass, and shall be free of pinholes or other defects. Copper protective coating shall be pure bright reflective copper, homogeneous without sludge, pinholes or other defects, and shall be of proper thickness to prevent "adhesion pull" by mirror backing paint. Mirror backing paint shall consist of two coats of special scratch and abrasion-resistant paint, and shall be baked in uniform thickness to provide a protection for silver and copper coatings which will permit normal cutting and edge fabrication.

2.8.2 Omitted

2.8.3 Mirror Accessories

2.8.3.1 Mastic

Mastic for setting mirrors shall be a polymer type mirror mastic resistant to water, shock, cracking, vibration and thermal expansion. Mastic shall be compatible with mirror backing paint, and shall be approved by mirror manufacturer.

2.8.3.2 Mirror Frames

Mirrors shall be provided with mirror frames (J-mold channels) fabricated of one-piece roll-formed Type 304 stainless steel with No. 4 brushed satin finish and concealed fasteners which will keep mirrors snug to wall. Frames shall be 32 by 6 by 6 mm continuous at top and bottom of mirrors. Concealed fasteners of type to suit wall construction material shall be provided with mirror frames.

2.9 OMITTED

2.10 GLAZING ACCESSORIES

2.10.1 Preformed Tape

Preformed tape shall be elastomeric rubber extruded into a ribbon of a width and thickness suitable for specific application. Tape shall be of type which will remain resilient, have excellent adhesion, and be chemically compatible to glass, metal, or wood.

2.10.2 Sealant

Sealant shall be elastomeric conforming to ASTM C 920, Type S or M, Grade NS, Class 12.5, Use G, of type chemically compatible with setting blocks, preformed sealing tape and sealants used in manufacturing insulating glass. Color of sealant shall be as selected.

2.10.3 Glazing Gaskets

Glazing gaskets shall be extruded with continuous integral locking projection designed to engage into metal glass holding members to provide a watertight seal during dynamic loading, building movements and thermal movements. Glazing gaskets for a single glazed opening shall be continuous one-piece units with factory-fabricated injection-molded corners free of flashing and burrs. Glazing gaskets shall be in lengths or units recommended by manufacturer to ensure against pull-back at corners. Glazing gasket profiles shall be as indicated on drawings.

2.10.3.1 Fixed Glazing Gaskets

Fixed glazing gaskets shall be closed-cell (sponge) smooth extruded compression gaskets of cured elastomeric virgin neoprene compounds conforming to ASTM C 509, Type 2, Option 1.

2.10.3.2 Wedge Glazing Gaskets

Wedge glazing gaskets shall be high-quality extrusions of cured elastomeric virgin neoprene compounds, ozone resistant, conforming to ASTM C 864, Option 1, Shore A durometer between 65 and 75.

2.10.3.3 Aluminum Framing Glazing Gaskets

Glazing gaskets for aluminum framing shall be permanent, elastic, non-shrinking, non-migrating, watertight and weathertight.

2.10.4 Omitted

2.10.5 Setting and Edge Blocking

Neoprene setting blocks shall be dense extruded type conforming to ASTM D 395, Method B, Shore A durometer between 70 and 90. Edge blocking shall be Shore A durometer of 50 (plus or minus 5). Silicone setting blocks shall be required when blocks are in contact with silicone sealant. Profiles, lengths and locations shall be as required and recommended in writing by glass manufacturer.

PART 3 EXECUTION

3.1 PREPARATION

Openings and framing systems scheduled to receive glass shall be examined for compliance with approved shop drawings, GANA-01 and glass manufacturer's recommendations including size, squareness, offsets at corners, presence and function of weep system, face and edge clearance requirements and effective sealing between joints of glass-framing members. Detrimental materials shall be removed from glazing rabbet and glass surfaces and wiped dry with solvent. Glazing surfaces shall be dry and free of frost.

3.2 INSTALLATION

Glass and glazing work shall be performed in accordance with approved shop drawings, GANA-01, glass manufacturer's instructions and warranty requirements. Glass shall be installed with factory labels intact and removed only when instructed. Wired glass shall be installed in accordance with NFPA 80. Edges and corners shall not be ground, nipped or cut after leaving factory. Springing, forcing or twisting of units during installation will not be permitted.

3.3 CLEANING

Upon completion of project, outside surfaces of glass shall be washed clean and the inside surfaces of glass shall be washed and polished in accordance with glass manufacturer's recommendations.

3.4 PROTECTION

Glass work shall be protected immediately after installation. Glazed openings shall be identified with suitable warning tapes, cloth or paper flags, attached with non-staining adhesives. Glass units which are broken, chipped, cracked, abraded, or otherwise damaged during construction activities shall be removed and replaced with new units.

END OF SECTION

SECTION 09250

GYPSUM WALLBOARD

PART 1 GENERAL

1.1 REFERENCES

The publications listed below form a part of this specification to the extent referenced. The publications are referred to in the text by basic designation only.

AMERICAN SOCIETY FOR TESTING AND MATERIALS (ASTM)

ASTM A 580	(1991b) Stainless and Heat Resisting Steel Wire
ASTM A 853	(1991) Steel Wire, Carbon, for General Use
ASTM B 164	(1993) Nickel-Copper Alloy Rod, Bar, and Wire
ASTM C 36	(1993) Gypsum Wallboard
ASTM C 442	(1992) Gypsum Backing Board and Coreboard
ASTM C 475	(1989) Joint Compound and Joint Tape for Finishing Gypsum Board
ASTM C 557	(1993) Adhesive for Fastening Gypsum Wallboard to Wood Framing
ASTM C 630	(1993) Water Resistant Gypsum Backing Board
ASTM C 645	(1992) Non-Load (Axial) Bearing Steel Studs, Runners (Track), and Rigid Furring Channels for Screw Application of Gypsum Board
ASTM C 754	(1988) Installation of Steel Framing Members to Receive Screw-Attached Gypsum
ASTM C 840	(1988) Application and Finishing of Gypsum Board
ASTM C 955	(1993) Load-Bearing (Transverse and Axial) Steel Studs, Runners (Track), and Bracing or Bridging for Screw Application of Gypsum Board and Metal Plaster Bases
ASTM C 1002	(1993) Steel Drill Screws for the Application of Gypsum Board or Metal Plaster Bases

FACTORY MUTUAL ENGINEERING AND RESEARCH (FM)

FM P8016 (1993) Specification Tested Products Guide

GYPSUM ASSOCIATION (GA)

GA 600 (1992) Fire Resistance Design Manual

UNDERWRITERS LABORATORIES (UL)

UL-05 (1993; supple) Fire Resistance Directory

1.2 SYSTEM DESCRIPTION

1.2.1 Fire-Rated Construction

Joints of fire-rated gypsum board enclosures shall be closed and sealed in accordance with UL requirements, and as required to meet pressurization requirements. Penetrations through rated partitions and ceilings shall be sealed tight with rated firestopping materials. Fire ratings shall be as indicated.

1.2.2 Pressurized Enclosures

Pressurized fire-rated gypsum board enclosures shall allow the mechanical and electrical life-safety systems to operate in accordance with the design intent. Air pressure within stair shaft shall be 240 Pa. Maximum mid-span deflection shall be L/360.

1.2.3 Acoustical Construction

Where shown on drawings, acoustical construction shall maintain a sound transmission coefficient (STC) rating of 50. All wall penetrations above or below ceilings shall be acoustically sealed. Walls shall be acoustically sealed to underside of structure above.

1.3 SUBMITTALS

Government approval is required for submittals with a "GA" designation; submittals having an "FIO" designation are for information only. The following shall be submitted in accordance with Section 01330 SUBMITTAL PROCEDURES:

SD-04 Drawings

Steel Framing; FIO. Control Joints; FIO. Fire-Resistant Assemblies; FIO.

Drawings and installation details for ceiling framing, furring, special wall framing, and framed openings in walls and ceilings.

SD-13 Certificates

Gypsum Wallboard; FIO. Water-Resistant Gypsum Board; FIO. Steel Framing; FIO.

Certificates stating that the steel framing and gypsum wallboard meet the specified requirements.

1.4 QUALIFICATIONS

Manufacturer shall specialize in manufacturing the types of material specified and shall have a minimum of 10 years of documented successful experience. Installer shall specialize in the type of gypsum board work required and shall have a minimum of 5 years of documented successful experience.

1.5 DELIVERY, STORAGE AND HANDLING

Materials shall be delivered in original containers bearing the name of manufacturer, contents, and brand name. Materials shall be stored off the ground in a weathertight structure for protection. Gypsum boards shall be stacked flat, off floor and supported to prevent sagging and warpage. Adhesives and joint materials shall be stored in accordance with manufacturer's printed instructions. Damaged or deteriorated materials shall be removed from jobsite.

1.6 ENVIRONMENTAL CONDITIONS

Environmental conditions for application and finishing of gypsum board shall be in accordance with ASTM C 840. During the application of gypsum board without adhesive, a room temperature of not less than 4 degrees C shall be maintained. During the application of gypsum board with adhesive, a room temperature of not less than 10 degrees C shall be maintained for 48 hours prior to application and continuously afterwards until completely dry. Building spaces shall be ventilated to remove water not required for drying joint treatment materials. Drafts shall be avoided during dry hot weather to prevent materials from drying too rapidly.

PART 2 MATERIALS

2.1 NON-LOADBEARING STUD WALLS

2.1.1 Studs

Studs for non-loadbearing walls shall conform to ASTM C 645. Studs shall be prefabricated 0.91 mm thick steel, C-shaped, punched web for utility access, G60 hot-dip galvanized after fabrication, or truss-designed studs fabricated of 1.519 mm thick steel angles with a single 5 mm rod forming an open-web truss-like pattern between flanges with all points contact welded.

2.1.2 Runner Tracks

Floor and ceiling runner tracks shall conform to ASTM C 645. Tracks shall be prefabricated, U-shaped with minimum 22 mm flanges, unpunched web, gauge to match studs, G60 hot-dip galvanized after fabrication.

2.2 LOADBEARING STUD WALLS

2.2.1 Studs

Studs for loadbearing walls shall conform to ASTM C 955. Studs shall be prefabricated, C-shaped with minimum 32 mm high flanges, punched web for utility access, 1.214 mm thick steel, G60 hot-dip galvanized after fabrication.

2.2.2 Runner Tracks

Floor and ceiling runner tracks shall conform to ASTM C 955. Runners shall be prefabricated, U-shaped with minimum 22 mm flanges, unpunched web, thickness to match studs, G60 hot-dip galvanized after fabrication.

2.2.3 Bridging

Bridging for loadbearing walls shall conform to ASTM C 955. Bridging shall be minimum 19 mm high by 19 mm deep cold-rolled steel channel with weld attachment clips at each stud or V-bar type weld or screw attached to each stud flange. Bridging shall be adequate to provide lateral support for the stud.

2.3 SUSPENDED CEILING FRAMING

Main carrying channels and cross furring members for suspended gypsum board ceilings shall conform to ASTM C 645. Carrying channels shall be formed from 1.519 mm thick cold-rolled steel, hot-dipped galvanized after fabrication, 38 by 19 mm deep. Furring members shall be formed from cold-rolled steel, hot-dip galvanized after fabrication, 19 mm high by 19 mm deep.

2.4 GYPSUM BOARD

Gypsum board shall have square-cut ends, tapered or beveled edges and shall be maximum possible length.

2.4.1 Standard Gypsum Board

Regular gypsum board shall conform to ASTM C 36, and shall be 1200 mm wide.

2.4.2 Fire-Rated Gypsum Board

Fire-rated gypsum board shall conform to ASTM C 36, and shall be Type X, 1200 mm wide.

2.4.3 Water-Resistant Gypsum Board

Water-resistant gypsum board shall conform to ASTM C 630, regular or Type X as required, with water-resistant paper faces, paintable surfaces, and shall be 1200 mm width and maximum permissible length.

2.4.4 Omitted

2.4.5 Omitted

2.4.6 Omitted

2.4.7 Shaftwall Coreboard

Shaftwall coreboard shall conform to ASTM C 442. Coreboard shall be specifically manufactured for cavity shaftwall system, with water-resistant paper faces, square edges, single lengths to fit required conditions, 25.4 mm thick, 600 mm wide.

2.5 ACCESSORIES

2.5.1 Taping and Embedding Compound

Taping and embedding compound shall conform to ASTM C 475. Compound shall be specifically formulated and manufactured for use in embedding tape at gypsum wallboard joints and fastener heads, and shall be compatible with tape and substrate.

2.5.2 Finishing or Topping Compound

Finishing or topping compound shall conform to ASTM C 475. Compound shall be specifically formulated and manufactured for use as a finishing compound for gypsum board.

2.5.3 All-Purpose Compound

All-purpose compound shall be specifically formulated and manufactured to use as a taping and finishing compound, and shall be compatible with tape and substrate.

2.5.4 Joint Tape

Joint tape shall conform to ASTM C 475 and shall be as recommended by gypsum board manufacturer.

2.5.5 Omitted

2.5.6 Screws

Screws shall conform to ASTM C 1002. Screws shall be self-drilling and self-tapping steel, Type S for light-gauge steel framing.

2.5.7 Adhesives

Adhesives shall conform to ASTM C 557. Adhesives shall be formulated to bond gypsum board to wood framing members. For securing gypsum board to metal framing, adhesive shall be as recommended by gypsum board manufacturer.

2.5.8 Hangers

Suspended ceiling runner channel hangers shall be soft, annealed steel wire not less than 4 mm nominal diameter, conforming to ASTM A 853 or flat iron or steel straps, at least 2 by 22 mm size, coated with zinc, cadmium, or rust-inhibiting paint.

2.5.9 Fastenings

Tie wire, clips, rings, and other fastenings shall be corrosion-resisting steel conforming to ASTM A 580, composition 302, 304, or 316, Condition A or nickel-copper alloy conforming to ASTM B 164, annealed condition except that walls, partitions, and other vertical surfaces not incorporated in ceiling construction may be erected with soft, annealed steel conforming to ASTM A 853.

2.5.9.1 Tie Wire

Tie wire for constructing partitions and vertical furring, for securing metal lath to supports, and for lacing shall be not less than 1.2 mm diameter. Tie wire for other applications shall be not less than 1.6 mm diameter.

2.5.9.2 Clips

Clips used in lieu of tie wire for securing the furring channels to the runner channels in ceiling construction shall be made from strip not less than 3 mm thick or shall be hairpin clip, formed of wire not less than 0.4 mm nominal diameter. Other clips and rings or fastenings of similar materials shall be equivalent in holding power to that provided by tie wire for the specific application.

PART 3 EXECUTION

3.1 INTERIOR WALL FRAMING

Steel framing and furring members shall be installed in accordance with ASTM C 754. Members shall be in alignment with spacings not to exceed the maximum spacings indicated on drawings. Runners shall be aligned accurately at the floor and ceiling and securely anchored.

3.1.1 Wall Openings

The framing system shall provide for the installation and anchorage of the required subframes or finish frames for wall openings at doors and access panels. Studs at openings shall be 0.912 mm thick minimum bare metal thickness and spot grouted at jamb anchor inserts. Double studs shall be fastened together with screws and secured to floor and overhead runners. Two studs placed back-to-back shall be used for framing solid-core doors.

3.1.2 Wall Control Joints

Control joints for expansion and contraction shall be constructed with double studs installed 13 mm apart in interior walls or wall furrings where indicated on drawings, but shall not exceed 9 mm between control joints. Door frames of less than ceiling height may be used as control joints only if standard control joints extend to ceiling from both corners of top of door frame. Control joints between studs shall be filled with firesafing insulation.

3.2 SHAFT WALL FRAMING

The shaft wall system shall be reinforced in accordance with the system manufacturer's published instructions. Bucks, anchors, blocking and other items placed in or behind shaft wall framing shall be coordinated with electrical and mechanical work. Fireproofing materials which are damaged or removed during shaft wall construction shall be patched or replaced.

3.3 SUSPENDED CEILING FRAMING

Suspended ceiling system framing shall be installed in accordance with ASTM C 754.

3.3.1 Hangers

Hangers shall be spaced not more than 1200 mm along runner channels and 900 mm in the other direction or 1050 mm in both directions unless otherwise indicated. Locations of hanger wires shall be coordinated with other work. Hangers at ends of runner channels shall be located not more than 150 mm from wall. Hanger wire shall be looped around bottom chord of open-web steel joists, structural steel members, or center I-beam clamps with three full turns around itself. Sags or twists which develop in the suspended system shall be adjusted. Damaged or faulty parts shall be replaced.

3.3.2 Main Runners

Main runner channels shall be installed in accordance with ASTM C 754. Hanger wires shall be double strand saddle-tied to runner channels and the ends of hanger wire shall be twisted three times around itself. Main runners shall be located to within 150 mm of the paralleling wall to support the ends of cross furring. Main runners shall not come in contact with abutting masonry or concrete walls. Where main runners are spliced, ends shall be overlapped 300 mm with flanges of channels interlocked, and shall be securely tied at each end of splice with wire looped twice around the channels.

3.3.3 Furring Channels

Furring channels shall be spaced in accordance with ASTM C 754. Furring channels shall be secured to the runner channels and to structural supports at each crossing with tie wire, hairpin clips, or equivalent fastenings. Furring channels shall be located within 50 mm of parallel walls and beams, and shall be cut 13 mm short of abutting walls.

3.3.4 Ceiling Openings

Support members shall be provided as required at ceiling openings for access panels, recessed light fixtures, and air supply or exhaust. Support members shall be not less than 38 mm main runner channels and vertically installed suspension wires or straps shall be located to provide at least the minimum support specified herein for furring and wallboard attachment. Intermediate structural members not a part of the structural system, shall be provided for attachment or suspension of support members.

3.3.5 Light Fixtures

Light fixtures shall not be supported directly from suspended ceiling runners. Hanger wires for recessed or surface mounted light fixtures shall be anchored to structure at four corners of light fixtures, and additional wires shall be provided at appropriate locations to carry the weight of light fixtures.

3.3.6 Control Joints

Control joints for expansion and contraction shall be located where indicated on drawings, and shall not exceed 230 square meters in area nor more than 15 m in either direction.

3.4 APPLICATION OF GYPSUM BOARD

Gypsum board shall be installed in accordance with ASTM C 840 and as specified. Edges and ends of gypsum boards shall be cut to obtain neat fitting joints. End joints of adjoining boards shall be staggered, and shall be staggered on opposite sides of wall. Boards shall be applied with moderate contact without forcing in place. Holes for pipes, fixtures or other small openings shall be cut with a tool which will provide a neat fit. Screws shall be driven so that the heads are slightly below the plane of paper face. Fracturing the paper face or damaging the core shall be avoided. Trim shall be installed at external and internal angles formed by the intersecting gypsum board surfaces with other surfaces. Corner beads shall be installed to vertical and horizontal corners in accordance with manufacturer's published instructions.

3.4.1 Omitted

3.4.2 Omitted

3.4.3 Omitted

3.4.4 Adhesively-Applied Gypsum Board

Walls scheduled to receive adhesively-applied gypsum board shall be dry, free of dust, oil, or form release agents, protrusions or voids, or foreign matter that would affect a proper bond.

3.5 TAPING AND FINISHING

Gypsum board taping and finishing shall be performed to finish level 5 in accordance with ASTM C 840. Boards shall be kept free of dirt, oil and other foreign matter that could cause a lack of bond. Screw heads, dents, gouges, and cut-outs shall be filled with joint compound and sanded. Accessories at exposed joints, edges, corners, openings, and similar locations shall be taped, floated with joint compound, and sanded to produce surfaces ready for gypsum board finishes.

3.6 FIRE-RESISTANT ASSEMBLIES

Gypsum wallboard construction for fire-rated assemblies shall be in accordance with UL-05, FM P8016 or GA 600 for the design number indicated on drawings.

3.7 PATCHING

Surface defects and damage shall be corrected as required to leave gypsum board smooth, uniform in appearance, and ready to receive finish as specified.

END OF SECTION

This page intentionally blank

SECTION 09310

CERAMIC TILE

PART 1 GENERAL

1.1 REFERENCES

The publications listed below form a part of this specification to the extent referenced. The publications are referred to in the text by basic designation only.

AMERICAN NATIONAL STANDARDS INSTITUTE (ANSI)

ANSI A108.1A	(1992) Installation of Ceramic Tile in the Wet-Set Method, with Portland Cement Mortar
ANSI A108.1B	(1992) Installation of Ceramic Tile on a Cured Portland Cement Mortar Setting Bed with Dry-Set or Latex Portland Cement Mortar
ANSI A108.4	(1992) Installation of Ceramic Tile with Organic Adhesives or Water Cleanable Tile Setting Epoxy Adhesive
ANSI A108.5	(1992) Installation of Ceramic Tile with Dry-Set Portland Cement Mortar or Latex-Portland Cement Mortar
ANSI A108.6	(1992) Installation of Ceramic Tile with Chemical Resistant, Water Cleanable Tile-Setting and -Grouting Epoxy
ANSI A108.10	(1992) Installation of Grout in Tilework
ANSI A118.1	(1992) Dry-Set Portland Cement Mortar
ANSI A118.3	(1992) Chemical Resistant, Water Cleanable Tile Setting and Grouting Epoxy and Water Cleanable Tile Setting Epoxy Adhesive
ANSI A118.4	(1992) Latex-Portland Cement Mortar
ANSI A118.6	(1992) Ceramic Tile Grouts
ANSI A136.1	(1992) Organic Adhesives for Installation of Ceramic Tile
ANSI A137.1	(1988) Ceramic Tile

AMERICAN SOCIETY FOR TESTING AND MATERIALS (ASTM)

ASTM C 241	(1990) Abrasion Resistance of Stone Subjected to Foot Traffic
ASTM C 373	(1988) Water Absorption, Bulk Density, Apparent Porosity, and Apparent

Specific Gravity of Fired Whiteware Products

ASTM C 648 (1984; R 1994) Breaking Strength of Ceramic Tile

ASTM C 1027 (1984; R 1990) Determining Visible Abrasion Resistance of Glazed Ceramic Tile

MARBLE INSTITUTE OF AMERICA (MIA)

MIA-01 (1991) Design Manual IV Dimensional Stone

TILE COUNCIL OF AMERICA (TCA)

TCA-01 (1994) Handbook for Ceramic Tile Installation

1.2 SUBMITTALS

Government approval is required for submittals with a "GA" designation; submittals having an "FIO" designation are for information only. The following shall be submitted in accordance with Section 01330 SUBMITTAL PROCEDURES:

SD-01 Data

Tile; FIO. Mortar, Grout, and Adhesive; FIO.

Manufacturer's catalog data.

SD-06 Instructions

Tile; FIO. Mortar and Grout; FIO.

Manufacturers preprinted installation and cleaning instructions.

SD-13 Certificates

Tile; FIO. Mortar, Grout, and Adhesive; FIO.

Certificates indicating conformance with specified requirements. A master grade certificate shall be furnished for tile.

SD-14 Samples

Tile; FIO. Accessories; FIO. Marble Thresholds; FIO.

Samples of sufficient size to show color range, pattern, type and joints.

1.3 DELIVERY AND STORAGE

Materials shall be delivered to the project site in manufacturer's original unopened containers with seals unbroken and labels and hallmarks intact. Materials shall be kept dry, protected from weather, and stored under cover.

1.4 ENVIRONMENTAL REQUIREMENTS

Ceramic tile work shall not be performed unless the substrate and ambient temperature is at least 10 degrees C and rising. Temperature shall be maintained above 10 degrees C while the work is being performed and for at least 7 days after completion of the work. When temporary heaters are used they shall be vented to the outside to avoid carbon dioxide damage to new tilework.

1.5 WARRANTY

Manufacturer's standard performance guarantees or warranties that extend beyond a 1 year period shall be provided.

PART 2 PRODUCTS

2.1 TILE

Tile shall be standard grade conforming to ANSI A137.1. Containers shall be grade sealed. Seals shall be marked to correspond with the marks on the signed master grade certificate. Tile shall be impact resistant with a minimum breaking strength for wall tile of 41 kg and 113 kg for floor tile in accordance with ASTM C 648. Water absorption shall be 0.5 maximum percent in accordance with ASTM C 373. Tile shall be Class III as rated by the manufacturer when tested in accordance with ASTM C 1027 for abrasion resistance as related to foot traffic.

2.1.1 Mosaic Tile

Ceramic mosaic tile and trim shall be unglazed natural clay with cushion edges or porcelain unpolished as scheduled. Tile size shall be 50 by 50 mm. Color shall be in accordance with Section ~~09915 COLOR SCHEDULE.~~ 00860, Part II.

2.1.2 Quarry Tile

Quarry tile and trim shall be unglazed with smooth surface. Tile shall be 200 x 200 x 10 mm. Color shall be in accordance with Section ~~09915 COLOR SCHEDULE~~ 00860, Part II.

2.1.3 Glazed Wall Tile

Glazed wall tile and trim shall be cushion edged with bright or matte glaze as scheduled. Tile shall be 106 by 106 mm. Color shall be in accordance with Section ~~09915 COLOR SCHEDULE~~ 00860, Part II.

2.1.4 Accessories

Accessories shall be the built-in type of the same materials and finish as the wall tile. Accessories shall be provided as follows: soap dish and toilet tissue dispenser with roller.

2.2 OMITTED

2.3 WATER

Water shall be potable.

2.4 MORTAR, GROUT, AND ADHESIVE

Mortar, grout, and adhesive shall conform to the following:

2.4.1 Dry-Set Portland Cement Mortar

ANSI A118.1.

2.4.2 Omitted

2.4.3 Latex-Portland Cement Mortar

ANSI A118.4.

2.4.4 Ceramic Tile Grout

ANSI A118.6; sand portland cement grout,dry-set grout,latex-portland cement groutor commercial portland cement grout.

2.4.5 Organic Adhesive

ANSI A136.1, Type I.

2.4.6 Epoxy Resin Grout

ANSI A118.3.

2.5 MARBLE THRESHOLDS

Marble thresholds shall be of size required by drawings or conditions. Marble shall be Group A as classified by MIA-01. Marble shall have a fine sand-rubbed finish and shall be white in color as approved by the Contracting Officer. Marble abrasion shall be not less than 12.0 when tested in accordance with ASTM C 241.

PART 3 EXECUTION

3.1 PREPARATORY WORK AND WORKMANSHIP

Surface to receive tile shall be inspected and shall conform to the requirements of ANSI A108.1A or ANSI A108.1B for surface conditions for the type setting bed specified and for workmanship. Variations of surface to be tiled shall fall within maximum values shown below:

TYPE	WALLS	FLOORS
Dry-Set Mortar	3 mm in 2.4 meters	3.0 mm in 3 meters
Organic Adhesives	3 mm in 2.4 meters	1.5 mm in 1 meters
Latex portland cement mortar	3 mm in 2.4 meters	3.0 mm in 3 meters
Epoxy	3 mm in 2.4 meters	3.0 mm in 3 meters

3.2 GENERAL INSTALLATION REQUIREMENTS

Tile work shall not be started until roughing in for mechanical and electrical work has been completed and tested, and built-in items requiring membrane waterproofing have been installed and tested. Floor tile installation shall not be started in spaces requiring wall tile until after wall tile has been installed. Tile in colors and patterns indicated shall be applied in the area shown on the drawings. Tile shall be installed with the respective surfaces in true even planes to the elevations and grades shown. Special shapes shall be provided as required for external corners, and other conditions to provide a complete and neatly finished installation. Tile bases and coves shall be solidly backed with mortar.

3.3 INSTALLATION OF WALL TILE

Wall tile shall be installed in accordance with the TCA-01, method W223, W242, or W243 for dry areas and B413 for showers.

3.3.1 Omitted

3.3.2 Dry-Set Mortar and Latex-Portland Cement Mortar

Dry-set or latex-portland cement shall be used to install tile in accordance with ANSI A108.5. Latex portland cement shall be used when installing porcelain ceramic tile.

3.3.3 Organic Adhesive

Organic adhesive installation of ceramic tile shall conform to ANSI A108.4.

3.4 INSTALLATION OF FLOOR TILE

Floor tile shall be installed in accordance with TCA-01, method F113. Shower receptors shall be installed in accordance with TCA-01, method B413 and B415.

3.4.1 Omitted

3.4.2 Dry-Set and Latex-Portland Cement

Dry-set or latex-portland cement mortar shall be used to install tile directly over properly cured, plane, clean concrete slabs in accordance with ANSI A108.5. Latex portland cement shall be used when installing porcelain ceramic tile.

3.4.3 Omitted

3.4.4 Ceramic Tile Grout

Ceramic tile grout shall be prepared and installed in accordance with ANSI A108.10.

3.5 OMITTED

3.6 INSTALLATION OF MARBLE THRESHOLDS

Thresholds shall be installed where indicated in a manner similar to that of the ceramic tile floor. Thresholds shall be the full width of the opening. Head joints at ends shall not exceed 6 mm in width and shall be grouted full as specified for ceramic tile.

3.7 OMITTED

3.8 OMITTED

3.9 CLEANING AND PROTECTING

Upon completion, tile surfaces shall be thoroughly cleaned in accordance with manufacturer's approved cleaning instructions. Acid shall not be used for cleaning glazed tile. Floor tile with factory mixed grout shall be cleaned in accordance with instructions of the grout manufacturer. After the grout has set, tile wall surfaces shall be given a protective coat of a noncorrosive soap or other approved method of protection. Tiled floor areas shall be covered with building paper before foot traffic is permitted over the finished tile floors. Board walkways shall be laid on tiled floors that are to be continuously used as passageways by workmen. Damaged or defective tiles shall be replaced.

END OF SECTION

SECTION 09650

RESILIENT FLOORING

PART 1 GENERAL

1.1 REFERENCES

The publications listed below form a part of this specification to the extent referenced. The publications are referred to in the text by basic designation only.

AMERICAN SOCIETY FOR TESTING AND MATERIALS (ASTM)

ASTM D 4078	(1992) Water Emulsion Floor Polish
ASTM E 648	(1994a) Critical Radiant Flux of Floor-Covering Systems Using a Radiant Heat Energy Source
ASTM E 662	(1995a) Specific Optical Density of Smoke Generated by Solid Materials
ASTM F 1066	(1995a) Vinyl-Composition Floor Tile
ASTM F 1303	(1995) Sheet Vinyl Floor Covering with Backing
ASTM F 1344	(1993) Rubber Floor Tile

FEDERAL SPECIFICATIONS (FS)

FS RR-T-650	(Rev E) Treads, Metallic and Nonmetallic, Skid Resistant

1.2 FIRE RESISTANCE REQUIREMENTS

Flooring in corridors and exits shall have a minimum average critical radiant flux of 0.45 watts per square centimeter when tested in accordance with ASTM E 648. The smoke density rating shall be less than 450 when tested in accordance with ASTM E 662.

1.3 SUBMITTALS

Government approval is required for submittals with a "GA" designation; submittals having an "FIO" designation are for information only. The following shall be submitted in accordance with Section 01330 SUBMITTAL PROCEDURES:

SD-01 Data

Resilient Flooring and Accessories; FIO.

Manufacturer's descriptive data and installation instructions including cleaning and maintenance instructions.

SD-09 Reports

Resilient Flooring and Accessories; FIO.

Copies of test reports showing that representative product samples of the flooring proposed for use have been tested by an independent testing laboratory within the past 3 years or when formulation change occurred and conforms to the requirements specified.

SD-14 Samples

Resilient Flooring and Accessories; FIO.

Three samples of each indicated color and type of flooring and base. Sample size shall be minimum 60 by 100 mm.

1.4 DELIVERY AND STORAGE

Materials shall be delivered to the building site in original unopened containers bearing the manufacturer's name, project identification, and handling instructions. Materials shall be stored in a clean dry area with temperature maintained above 21 degrees C for 2 days prior to installation, and shall be stacked according to manufacturer's recommendations. Materials shall be protected from the direct flow of heat from hot-air registers, radiators and other heating fixtures and appliances.

1.5 ENVIRONMENTAL REQUIREMENTS

Areas to receive resilient flooring shall be maintained at a temperature above 21 degrees C and below 38 degrees C for 2 days before application, during application and 2 days after application. A minimum temperature of 13 degrees C shall be maintained thereafter.

1.6 SCHEDULING

Resilient flooring application shall be scheduled after the completion of other work which would damage the finished surface of the flooring.

1.7 WARRANTY

Manufacturer's standard performance guarantees or warranties that extend beyond a 1 year period shall be provided.

1.8 EXTRA MATERIALS

Extra flooring material of each color and pattern shall be furnished at the rate of 0.5 square meters for each 92 square meters of sheet flooring installed. Extra materials shall be from the same lot as those installed. Extra base material composed of 6 m of each color shall be furnished.

PART 2 PRODUCTS

2.1 OMITTED

2.2 SHEET VINYL FLOORING TYPE

Sheet vinyl flooring shall be composed of a homogeneous, vinyl composition. Flooring shall be not less than 3600 ~~1800~~ mm wide. Sheet vinyl flooring with backing shall conform to ASTM F 1303, Type II, Grade 1 (minimum wear layer thickness 1.27 mm and minimum overall thickness 2.16 mm. Sheet vinyl flooring without backing shall meet the overall thickness 2.03 mm, composition, flexibility, indentation, and the solvent resistance requirements of ASTM F 1303, Type II. The solid vinyl color and pattern shall extend through the total thickness of the material.

2.3 VINYL-COMPOSITION TILE

Vinyl-composition tile shall conform to ASTM F 1066, Class 2, (through pattern tile), Composition 1, asbestos-free, and shall be 300 mm (12 inches) square and 3.2 mm (1/8 inch) thick. Tile shall have the color and pattern uniformly distributed throughout the thickness of the tile. Flooring in any one continuous area shall be from the same lot and shall have the same shade and pattern.

2.4 RUBBER TILE

Rubber tile shall conform to ASTM F 1344 Class 1 homogeneous construction, Type A (solid color) 300 mm (12 inches) square. Surface shall be raised round square studs with chamfered edges. Stud profile shall be low. Overall thickness shall be 3 mm (1/8 inch) thick.

2.5 STAIR TREADS, RISERS, AND STRINGERS

Treads, risers, and stringers shall conform to FS RR-T-650 composition B, (vinyl). Design shall be either a one piece nosing/tread/riser or a two piece nosing/tread with a matching coved riser. Surface of treads shall be raised stud.

2.6 RESILIENT BASE

Base shall be manufacturers standard rubber or vinyl coved style (installed with resilient flooring). Base shall be 100 mm high and a minimum 3 mm thick. Preformed outside corners shall be furnished.

2.7 INTEGRAL COVED BASE

A vinyl square cap strip and vinyl, rubber, or wood fillet strip with a minimum radius of 19 mm shall be provided for integral coved bases as shown.

2.8 OMITTED

2.9 OMITTED

2.10 ADHESIVE

Adhesive for flooring and wall base shall be as recommended by the flooring manufacturer.

2.11 POLISH

Polish shall conform to ASTM D 4078.

2.12 CAULKING AND SEALANTS

Caulking and sealants shall be in accordance with Section 07900 JOINT SEALING.

2.13 MANUFACTURER'S COLOR AND TEXTURE

Color and texture shall be in accordance with COLOR SCHEDULE as shown on the drawings.

PART 3 EXECUTION

3.1 EXAMINATION/VERIFICATION OF CONDITIONS

The Contractor shall examine and verify that site conditions are in agreement with the design package and shall report all conditions that will prevent a proper installation. The Contractor shall not take any corrective action without written permission from the Government.

3.2 SURFACE PREPARATION

Flooring shall be in a smooth, true, level plane, except where indicated as sloped. Before any work under this section is begun, all defects such as rough or scaling concrete, low spots, high spots, and uneven surfaces shall have been corrected, and all damaged portions of concrete slabs shall have been repaired as recommended by the flooring manufacturer. Concrete curing compounds, other than the type that does not adversely affect adhesion, shall be entirely removed from the slabs. Paint, varnish, oils, release agents, sealers, waxers, and adhesives shall be removed, as recommended by the flooring manufacturer.

3.3 MOISTURE TEST

The suitability of the concrete subfloor for receiving the resilient flooring with regard to moisture content shall be determined by a moisture test as recommended by the flooring manufacturer.

3.4 OMITTED

3.5 INSTALLATION OF SHEET VINYL FLOORING

Sheet vinyl flooring shall be installed with adhesive in accordance with the manufacturer's written installation instructions. Flooring shall be fitted to the room by hand cutting, straight scribing, or pattern scribing as necessary to suit job conditions. Flooring shall be cut to, and fitted around, all permanent fixtures, built-in

furniture and cabinets, pipes, and outlets. Seams shall be cut by overlapping or underscribing as recommended by the manufacturer. Flooring shall be installed with an integral coved base.

3.6 OMITTED

3.7 OMITTED

3.8 INSTALLATION OF RESILIENT BASE

Wall base shall be installed with adhesive in accordance with the manufacturer's written instructions. Base joints shall be tight and base shall be even with adjacent resilient flooring. Voids along the top edge of base at masonry walls shall be filled with caulk.

3.9 INSTALLATION OF TREADS AND RISERS

Stair treads and risers shall be installed with adhesive in accordance with the manufacturer's written installation instructions. Treads and risers as shall cover the full width of the stairs. Stairs wider than manufacturer's standard lengths shall have equal length pieces butted together to cover the treads.

3.10 INSTALLATION OF INTEGRAL COVED BASE

Integral coved base shall be formed by extending the flooring material onto the wall surface. Cove shall be supported by a plastic, rubber or wood coved filler having a minimum radius of 19 mm. Coved base shall be installed with adhesive in accordance with the manufacturer's written instructions. A vinyl cap strip shall be provided at the top of the base.

3.11 CLEANING

Immediately upon completion of installation of tile in a room or an area, flooring and adjacent surfaces shall be cleaned to remove all surplus adhesive. After installation, flooring shall be cleaned and maintained as recommended by the manufacturer.

3.12 PROTECTION

From the time of laying until acceptance, flooring shall be protected from damage as recommended by the flooring manufacturer. Flooring which becomes damaged, loose, broken, or curled shall be removed and replaced.

END OF SECTION

This page intentionally blank

SECTION 09680

CARPET

PART 1 GENERAL

1.1 REFERENCES

The publications listed below form a part of this specification to the extent referenced. The publications are referred to in the text by basic designation only.

AMERICAN ASSOCIATION OF TEXTILE CHEMISTS AND COLORISTS (AATCC)

AATCC 16	(1993) Test Method: Colorfastness to Light
AATCC 134	(1991) Test Method: Electrostatic Propensity of Carpets
AATCC 165	(1993) Test Method: Colorfastness to Crocking: Carpets - AATCC Crockmeter Method

AMERICAN SOCIETY FOR TESTING AND MATERIALS (ASTM)

ASTM D 297	(1993) Rubber Products - Chemical Analysis
ASTM D 418	(1993) Pile Yarn Floor Covering Construction
ASTM D 1335	(1967; R 1972) Tuft Bind of Pile Floor Coverings
ASTM D 1667	(1976; R 1990) Flexible Cellular Materials - Vinyl Chloride Polymers and Copolymers (Closed-Cell Foam)
ASTM D 3676	(1978; R 1989) Rubber Cellular Cushion Used for Carpet or Rug Underlay
ASTM D 3936	(1980) Delamination Strength of Secondary Backing of Pile Floor Coverings
ASTM E 648	(1994a) Critical Radiant Flux of Floor-Covering Systems Using a Radiant Heat Energy Source

CARPET AND RUG INSTITUTE (CRI)

CRI 104	(1994) Commercial Carpet Installation Standard

CODE OF FEDERAL REGULATIONS (CFR)

16 CFR 1630 Standard for the Surface Flammability of Carpet and Rugs

1.2 SUBMITTALS

Government approval is required for submittals with a "GA" designation; submittals having an "FIO" designation are for information only. The following shall be submitted in accordance with Section 01330 SUBMITTAL PROCEDURES:

SD-01 Data

Carpet and Accessories; FIO.

For each type of carpet material and installation accessory required, catalog data and printed documentation stating physical characteristics, durability, resistance to fading and flame resistance characteristics.

SD-04 Drawings

Installation; FIO.

Layout drawings indicating areas receiving carpet, direction of pile, location of seams and locations of edge molding.

SD-06 Instructions

Carpet and Accessories; FIO.

Three copies of the manufacturer's printed installation instructions for the carpet, including procedures for installation, preparation of substrate, seaming techniques and recommended adhesives and tapes.

SD-09 Reports

Moisture Tests; FIO.

Test reports of moisture content of concrete slab stating date of test, person conducting the test and the area tested.

SD-13 Certificates

Carpet and Accessories; FIO.

Certificates of compliance from a laboratory accredited by the National Laboratory Accreditation Program of the National Institute of Standards and Technology attesting that each type of carpet and cushion material conforms to the standards specified.

SD-14 Samples

Carpet and Accessories; FIO.

a. Carpet: Two "Production Quality" samples 675 by 450 mm of each carpet proposed for use, showing quality, pattern and color specified.

b. Vinyl or Aluminum Moldings: Two pieces of each type at least 300 mm.

SD-19 Operation and Maintenance Manuals

Carpet and Accessories; FIO.

Three copies of carpet manufacturer's maintenance instructions describing recommended type of cleaning equipment and material, spotting and cleaning methods and cleaning cycles.

1.3 DELIVERY AND STORAGE

Materials shall be delivered to the site in the manufacturer's original wrappings and packages clearly labeled with the manufacturer's name, brand name, size, dye lot number and related information. Materials shall be stored in a clean, dry, well ventilated area, protected from damage and soiling and maintained at a temperature above 16 degrees C (60 degrees F) for 2 days prior to installation.

1.4 ENVIRONMENTAL REQUIREMENTS

Areas in which carpeting is to be installed shall be maintained at a temperature above 16 degrees C for 2 days before installation, during installation, and for 2 days after installation. A minimum temperature of 13 degrees C shall be maintained thereafter for the duration of the contract. Traffic or movement of furniture or equipment in carpeted area shall not be permitted for 24 hours after installation. Other work which would damage the carpet shall be completed prior to installation of carpet.

1.5 WARRANTY

Manufacturer's standard performance guarantees or warranties that extend beyond a 1 year period shall be provided.

1.6 EXTRA MATERIAL

Extra material from same dye lot consisting of full width continuous broadloom shall be provided for maintenance. A minimum of 5 percent of total square meters (square yards) of each carpet type, pattern, and color shall be provided.

PART 2 PRODUCTS

2.1 CARPET TYPE

Carpet shall be first quality; free of visual blemishes, streaks, poorly dyed areas and other physical and manufacturing defects. Carpet materials and treatments shall be reasonably nonallergenic and free of other recognized health hazards. Carpet shall meet requirements of UBC 1994 edition Standard 8-1 Test Method for Surface-burning Characteristics of Building Materials.

2.1.1 Physical Characteristics

Carpet shall comply with the following:

a. Carpet Fabrication: Tufted.

b. Category: Broadloom.

c. Pile Type: Level loop.

d. Pile Fiber: 100 percent Dupont Antron Lumena Type 6,6 Continuous Filament Nylon.

e. Finish Pile Height: 4.78 mm.

f. Gauge: 31.50 per 10 cm.

g. Surface Pile Yarn Weight: 1017 grams per sq. meters. This does not include weight of backings. Weight of actual surface yarn exposed to wear above carpet backing shall be determined in accordance with ASTM D 418.

h. Flame Spread class A or B.

i. Dye Method:

Solution dyed - synthetic yarn which is spun from a colored solution with the filament impregnated with the pigment.

j. Backing Materials: Primary backing materials shall be those customarily used and accepted by the trade for each type of carpet or polypropylene. Secondary backing to suit project requirements shall be those customarily used and accepted by the trade for each type of carpet, except when a special unitary back designed for gluedown is provided.

k. Width: 3.6 m minimum usable carpet.

l. Pattern, texture, and color: As on drawings.

2.1.2 Performance Requirements

a. Static Control: Static control shall be provided to permanently control static buildup to less than 3,500 volts when tested at 20 percent relative humidity and 21 degrees C in accordance with AATCC 134.

b. Flammability and Critical Radiant Flux Requirements: Carpet shall comply with 16 CFR 1630. Carpet in corridors and exits shall have a minimum average critical radiant flux of 0.45 watts per square centimeter when tested in accordance with ASTM E 648. Carpet with separate cushion where used in corridors and exits shall be tested together as an assembly.

c. Tuft Bind: Tuft bind shall be a minimum 40 N average force for loop pile when tested in accordance with ASTM D 1335.

d. Additional Performance Characteristics:

(1) Antimicrobial: Nontoxic antimicrobial treatment guaranteed by the carpet manufacturer to last the life of the carpet.

(2) Attached Cushion: Attached cushion shall be latex foam rubber with minimum weight of 0.850 kg/m sq, minimum thickness of 2.54 mm, minimum density of 272.31 kg/m cu, minimum compression resistance of 34.5 kPa (5 psi), and minimum compression set of 15 percent in accordance with ASTM D 3676 or chemically frothed urethane with minimum weight of 0.057 kg/m sq, minimum density of 16.02 kg/m cu, or mechanically frothed urethane with minimum weight of 6.71 kg/m sq , minimum density of 224.26 kg/m cu (14 lb/cubic foot), minimum thickness of 2.54 mm, and minimum compression resistance of 34.47 kPa (5 psi) and compression set of 15 percent in accordance with ASTM D 3676 or ethylene vinyl acetate (EVA) or polyvinyl chloride (PVC) with minimum weight of 1.25 kg/m sq , minimum thickness of 3.81 mm, and minimum density of 240.27 kg/m cu, and a minimum compression set of 15 percent in accordance with ASTM D 1667. Maximum ash content shall not exceed 50 percent when tested in accordance with ASTM D 297. Cushion shall pass accelerated aging test in accordance with ASTM D 3676.

(3) Ply: 2.

e. Colorfastness to Crocking: Dry and wet crocking shall comply with AATCC 165 and shall have a minimum rating of step 4 on the AATCC Color Transference Chart for all colors.

f. Colorfastness to Light: Colorfastness to light shall comply with AATCC 16 and shall have a minimum 4 grey scale rating after 40 hours.

g. Delamination Strength: Delamination strength for tufted carpet with a secondary back shall be minimum of 440 N/m in accordance with ASTM D 3936.

2.2 OMITTED

2.3 ADHESIVES AND CONCRETE PRIMER

Adhesives and concrete primers for installation of carpet shall be waterproof, nonflammable, meet local air-quality standards, and shall be as recommended by the carpet manufacturer. Seam adhesive shall be waterproof, nonflammable and nonstaining as recommended by the carpet manufacturer. Release adhesive for modular tile carpet shall be as recommended by the carpet manufacturer.

2.4 MOLDING

Molding shall be aluminum or vinyl. Aluminum molding shall be a hammered surface, pinless clamp-down type, designed for the type of carpet being installed. Finish shall be natural color anodized. Floor flange shall be a minimum 38 mm wide and face shall be a minimum 16 mm wide. Vinyl molding shall be heavy-duty and designed for the type of carpet being installed. Floor flange shall be a minimum 50 mm wide. Color shall be dark bronze.

2.5 TAPE

Tape for seams shall be as recommended by the carpet manufacturer for the type of seam used in installation.

PART 3 EXECUTION

3.1 SURFACE PREPARATION

Carpet shall not be installed on surfaces that are unsuitable and will prevent a proper installation. Holes, cracks, depressions, or rough areas shall be repaired using material recommended by the carpet or adhesive manufacturer. Floor shall be free of any foreign materials and swept broom clean. Before beginning work, subfloor shall be tested with glue and carpet to determine "open time" and bond.

3.2 MOISTURE TEST

Concrete slab shall be tested for moisture content. The moisture content shall not exceed a hygrometer reading of 65 percent.

3.3 INSTALLATION

Installation shall be in accordance with the manufacturer's instructions and CRI 104. Edges of carpet meeting hard surface flooring shall be protected with molding. Installation shall be in accordance with the molding manufacturer's instructions.

3.3.1 Broadloom of Installation

Broadloom carpet shall be installed direct glue down and shall be smooth, uniform, and secure, with a minimum of seams. Seams shall be uniform, unnoticeable, and treated with a seam adhesive. Side seams shall be run toward the light where practical and where such layout does not increase the number of

seams. Breadths shall be installed parallel, with carpet pile in the same direction. Patterns shall be accurately matched. Cutouts, as at door jambs, columns and ducts shall be neatly cut and fitted securely. Seams at doorways shall be located parallel to and centered directly under doors. Seams shall not be made perpendicular to doors or at pivot points. Seams at changes in directions of corridors shall follow the wall line parallel to the carpet direction. Corridors with widths less than 1.8 m shall have the carpet laid lengthwise down the corridors.

3.4 CLEANING AND PROTECTION

3.4.1 Cleaning

After installation of the carpet, debris, scraps, and other foreign matter shall be removed. Soiled spots and adhesive shall be removed from the face of the carpet with appropriate spot remover. Protruding face yarn shall be cut off and removed. Carpet shall be vacuumed clean.

3.4.2 Protection

The installed carpet shall be protected from soiling and damage with heavy, reinforced, nonstaining kraft paper, plywood or hardboard sheets. Edges of kraft paper protection shall be lapped and secured to provide a continuous cover. Traffic shall be restricted for at least 45 hours. Protective covering shall be removed when directed by the Contracting Officer.

3.5 REMNANTS

Remnants remaining from the installation, consisting of scrap pieces more than 600 mm in dimension with more than 0.6 square meters total, shall be provided. Non retained scraps shall be removed from site.

END OF SECTION

This page intentionally blank

SECTION 09720

WALL COVERINGS

PART 1 GENERAL

1.1 REFERENCES

The publications listed below form a part of this specification to the extent referenced. The publications are referred to in the text by basic designation only.

FEDERAL SPECIFICATIONS (FS)

FS CCC-W-408 (Rev D) Wall Covering, Vinyl-Coated

1.2 SUBMITTALS

Government approval is required for submittals with a "GA" designation; submittals having an "FIO" designation are for information only. The following shall be submitted in accordance with Section 01330 SUBMITTAL PROCEDURES:

SD-01 Data

Wall Covering and Accessories; FI0.

Manufacturer's descriptive data.

SD-06 Instructions

Installation; FI0.

Installation instructions for wall covering and accessories.

Maintenance; FI0.

Cleaning and maintenance instructions for wall covering and accessories.

SD-14 Samples

Wall Covering and Accessories; FI0.

Three samples of each indicated type, pattern, and color of wall covering required. Samples of wall covering shall be minimum 125 mm by 175 mm and of sufficient size to show pattern repeat. Three samples of each indicated type edge guard and wainscot cap required.

1.3 DELIVERY AND STORAGE

Materials shall be delivered to the building site in original unopened containers. Materials shall be stored in accordance with the manufacturer's instructions in a clean dry area with temperature maintained above 16 degrees C.

1.4 ENVIRONMENTAL REQUIREMENTS

Areas to receive wall covering shall be maintained at a temperature above 16 degrees C for 3 days before, during, and 3 days after application.

1.5 EXTRA MATERIALS

One lineal meter of full-width wall covering for each 100 lineal meters of wall covering installed shall be furnished. The wall covering shall be from the same lot as that installed.

PART 2 PRODUCTS

2.1 WALL COVERINGS

Wall coverings shall be manufacturer's standard material designed specifically for the specified use.

2.1.1 Vinyl Wall Covering Type

Vinyl wall covering shall be a vinyl coated woven or nonwoven fabric with mildew and germicidal additives and shall conform to FS CCC W 408, Type II, 0.445 to 0.815 kg total weight per square meter and width of 500 mm. Pattern and color of vinyl wall covering shall be as shown in Section ~~09915 COLOR SCHEDULE~~ 00860, Part II.

2.2 OMITTED

2.3 EDGE GUARDS

Edge guards shall be 2 mm thick and shall cover 19 mm each side of corner at right angles. Edge guards shall be clear polycarbonate from the same lot and color.

2.4 WAINSCOT CAP

Wainscot cap shall be natural finish oak wood molding as specified in Section 06200 FINISH CARPENTRY, about 11 mm by 41 mm.

2.5 PRIMER AND ADHESIVE

Primer and adhesive shall be mildew resistant and of a type recommended by the wall covering manufacturer. Adhesive to install cap shall be of a type recommended by the manufacturer of the wainscot cap.

PART 3 EXECUTION

3.1 SURFACE PREPARATION

Wall covering shall not be applied to surfaces that are rough, that contain stains that will bleed through the wall covering, or that are otherwise unsuitable for proper installation. Cracks and holes shall be filled and rough spots shall be sanded smooth. Surfaces to receive wall covering shall be thoroughly dry. Surface of walls shall be primed as required by manufacturer's instructions to permit ultimate removal of wall covering from the wall surface. Primer shall be allowed to completely dry before adhesive application.

3.2 INSTALLATION

3.2.1 Omitted

3.2.2 Vinyl Wall Covering

Wall covering shall be installed in accordance with the manufacturer's installation instructions. Glue and adhesive spillage shall be immediately removed from wall covering face and seams with a remover recommended by the manufacturer. After the installation is complete, the fabric wall covering shall be thoroughly vacuumed with a ceiling to floor motion.

3.2.3 Edge Guards and Wainscot Cap

Edge guards shall be installed on 90-degree exterior corners where vinyl wall covering is installed. Wainscot cap shall be installed where vinyl wall covering wainscot is shown on the drawings and in accordance with the manufacturer's printed instructions.

3.3 CLEAN-UP

Upon completion of the work, wall covering shall be left clean and free of dirt or soiling.

END OF SECTION

This page intentionally blank

SECTION 09900

PAINTING, GENERAL

PART 1 GENERAL

1.1 REFERENCES

The publications listed below form a part of this specification to the extent referenced. The publications are referred to in the text by basic designation only.

AMERICAN CONFERENCE OF GOVERNMENTAL INDUSTRIAL HYGIENISTS (ACGIH)

ACGIH-02	(1993) 1993-1994 Threshold Limit Values for Chemical Substances and Physical Agents and Biological Exposure Indices

FEDERAL SPECIFICATIONS (FS)

FS TT-C-555	(Rev B; Am 1) Coating, Textured (for Interior and Exterior Masonry Surfaces)
FS TT-E-489	(Rev J) Enamel, Alkyd, Gloss, Low VOC Content
FS TT-E-506	(Rev K; Am 1) Enamel, Alkyd, Gloss, Tints and White (for Interior Use)
FS TT-E-508	(Rev C; Am 1) Enamel, Interior Semigloss, Tints and White
FS TT-E-509	(Rev C) Enamel, Odorless, Alkyd, Interior, Semigloss, White and Tints
FS TT-E-545	(Rev C) Primer (Enamel-Undercoat, Alkyd, Odorless, Interior, Flat, Tints and White)
FS TT-P-37	(Rev D; Am 4; Reinstatement Notice) Paint, Alkyd Resin; Exterior Trim, Deep Colors
FS TT-P-38	(Rev E) Paint, Aluminum (Ready-Mixed)
FS TT-P-95	(Rev C; Am 1) Paint, Rubber: for Swimming Pools and Other Concrete and Masonry Surfaces
FS TT-P-102	(Rev F) Paint, Oil, (Alkyd Modified, Exterior, Low VOC)
FS TT-P-645	(Rev B) Primer, Paint, Zinc-Molybdate, Alkyd Type

FS TT-P-002119	(Basic) Paint, Latex Base, High Traffic Area, Flat and Eggshell Finish (Low Lustre), (For Interior Use)
FS TT-S-711	(Rev C) Stain; Oil Type, Wood, Interior
FS TT-V-85	(Rev C; Int Am 2) Varnish, Oil, Low Sheen, Brush or Spray Application

STEEL STRUCTURES PAINTING COUNCIL (SSPC)

SSPC Paint 5	(1991) Zinc Dust, Zinc Oxide and Phenolic Varnish Paint
SSPC Paint 21	(1991) White or Colored Silicone Alkyd Paint
SSPC SP 1	(1982) Solvent Cleaning
SSPC SP 2	(1989) Hand Tool Cleaning
SSPC SP 3	(1989) Power Tool Cleaning
SSPC SP 7	(1991) Brush-Off Blast Cleaning

1.2 SUBMITTALS

Government approval is required for submittals with a "GA" designation; submittals having an "FIO" designation are for information only. The following shall be submitted in accordance with Section 01330 SUBMITTAL PROCEDURES:

SD-01 Data

Paint; FIO.

The names, quantity represented, and intended use for the proprietary brands of materials proposed to be substituted for the specified materials when the required quantity of a particular batch is 200 L (50 gallons) or less.

SD-06 Instructions

Mixing and Thinning; FIO. Application; FIO.

Manufacturer's current printed product description, material safety data sheets (MSDS) and technical data sheets for each coating system. Detailed application instructions for textured coatings shall be provided.

SD-09 Reports

Paint; FIO.

A statement as to the quantity represented and the intended use, plus the following test report for batches in excess of 200 L:

a. A test report showing that the proposed batch to be used meets all specification requirements, or:

b. A test report showing that a previous batch of the same formulation as the batch to be used met all specification requirements, plus, on the proposed batch to be used, a report of test results for properties of weight per liter (gallon), viscosity, fineness of grind, drying time, color, and gloss.

SD-13 Certificates

Lead; FIO. Mildewcide and Insecticide; FIO. Volatile Organic Compound (VOC) Content; FIO.

Certificate stating that paints for interior use contain no mercurial mildewcide or insecticide. Certificate stating that paints proposed for use contain not more than 0.06 percent lead. Certificate stating that paints proposed for use meet the VOC regulations of the local Air Pollution Control Districts having jurisdiction over the geographical area in which the project is located.

Paint; FIO.

While the material is at the site or source of supply, and at a time agreeable to the Contractor and the Contracting Officer, a 1 liter sample of each color and batch, except for quantities of 200 liters or less, shall be taken by random selection from the sealed containers by the Contractor in the presence of a representative of the Contracting Officer. The contents of the containers to be sampled shall be thoroughly mixed to ensure that the sample is representative. Samples shall be identified by designated name, specification number, manufacturer name and address, batch number, project contract number, intended use, and quantity involved.

1.3 PACKAGING, LABELING, AND STORING

Paints shall be in sealed containers that legibly show the designated name, formula or specification number, batch number, color, quantity, date of manufacture, manufacturer's formulation number, manufacturer's directions including any warnings and special precautions, and name of manufacturer. Pigmented paints shall be furnished in containers not larger than 20 liters. Paints and thinner shall be stored in accordance with the manufacturer's written directions and as a minimum stored off the ground, under cover, with sufficient ventilation to prevent the buildup of flammable vapors and at temperatures between 4 and 35 degrees C. Paints shall be stored on the project site or segregated at the source of supply sufficiently in advance of need to allow 30 days for testing.

1.4 APPROVAL OF MATERIALS

When samples are tested, approval of materials will be based on tests of the samples; otherwise, materials will be approved based on test reports furnished with them. If materials are approved based on test reports furnished, samples will be retained by the Government for testing should the materials appear defective during or after application. In addition to any other remedies under the contract the cost of retesting defective materials will be at the Contractor's expense.

1.5 ENVIRONMENTAL CONDITIONS

Unless otherwise recommended by the paint manufacturer, the ambient temperature shall be between 7 and 35 degrees C when applying coatings.

1.6 SAFETY AND HEALTH

Work shall comply with applicable Federal, State, and local laws and regulations, and with the ACCIDENT PREVENTION PLAN, including the Activity Hazard Analysis as specified in the CONTRACT CLAUSES. The Activity Hazard Analysis shall include analyses of the potential impact of painting operations on painting personnel and on others involved in and adjacent to the work zone.

1.6.1 Worker Exposures

Exposure of workers to chemical substances shall not exceed limits as established by ACGIH-02, or as required by a more stringent applicable regulation.

1.6.2 Toxic Compounds

Toxic compounds having ineffective physiological properties, such as odor or irritation levels, shall not be used unless approved by the Contracting Officer.

1.6.3 Training

Workers having access to an affected work area shall be informed of the contents of the applicable material data safety sheets (MSDS) and shall be informed of potential health and safety hazard and protective controls associated with materials used on the project. An affected work area is one which may receive mists and odors from the painting operations. Workers involved in preparation, painting and clean-up shall be trained in the safe handling and application, and the exposure limit, for each material which the worker will use in the project. Personnel having a need to use respirators and masks shall be instructed in the use and maintenance of such equipment.

1.6.4 Coordination

Work shall be coordinated to minimize exposure of building occupants, other Contractor personnel, and visitors to mists and odors from preparation, painting and clean-up operations.

PART 2 PRODUCTS

2.1 PAINT

The term "paint" as used herein includes emulsions, enamels, paints, stains, varnishes, sealers, and other coatings, whether used as prime, intermediate, or finish coat. Paint shall conform to the respective specifications listed for use in the painting schedules at the end of this section, except when the required amount of a material of a particular batch is 200 liters or less, an approved first line proprietary paint material with similar intended usage and color to that specified may be used. Additional requirements are as follows:

2.1.1 Colors and Tints

Colors shall be as selected from manufacturer's standard colors, as indicated. Manufacturer's standard color is for identification of color only. Stains shall conform in shade to manufacturer's standard color. The color of the undercoats shall vary slightly from the color of the next coat.

2.1.2 Omitted

2.1.3 Lead

Paints containing lead in excess of 0.06 percent by weight of the total nonvolatile content (calculated as lead metal) shall not be used.

2.1.4 Chromium

Paints containing zinc chromate or strontium chromate pigments shall not be used.

2.1.5 Volatile Organic Compound (VOC) Content

Paints shall comply with applicable state and local laws enacted to insure compliance with Federal Clean Air Standards and shall conform to the restrictions of the local air pollution control authority.

PART 3 EXECUTION

3.1 PROTECTION OF AREAS NOT TO BE PAINTED

Items not to be painted which are in contact with or adjacent to painted surfaces shall be removed or protected prior to surface preparation and painting operations. Items removed prior to painting shall be replaced when painting is completed. Following completion of painting, workmen skilled in the trades involved shall reinstall removed items. Surfaces contaminated by coating materials shall be restored to original condition.

3.2 SURFACE PREPARATION

Surfaces to be painted shall be clean and free of foreign matter before application of paint or surface treatments. Oil and grease shall be removed with clean cloths and cleaning solvents prior to mechanical cleaning. Cleaning solvents shall be of low toxicity with a flashpoint in excess of 38 degrees C. Cleaning shall be programmed so that dust and other contaminants will not fall on wet, newly painted surfaces. Exposed ferrous metals such as nail heads on or in contact with surfaces to be painted with water-thinned paints, shall be spot-primmed with a suitable corrosion-inhibitive primer capable of preventing flash rusting and compatible with the coating specified for the adjacent areas.

3.2.1 Omitted

3.2.2 Ferrous Surfaces

Ferrous surfaces including those that have been shop coated, shall be solvent-cleaned. Surfaces that contain loose rust, loose mill scale, and other foreign substances shall be cleaned mechanically with hand tools according to SSPC SP 2, power tools according to SSPC SP 3 or by sandblasting according to SSPC SP 7. Shop-coated ferrous surfaces shall be protected from corrosion by treating and touching up corroded areas immediately upon detection.

3.2.3 Nonferrous Metallic Surfaces

Galvanized, aluminum and aluminum-alloy, lead, copper, and other nonferrous metal surfaces shall be solvent-cleaned in accordance with SSPC SP 1.

3.2.4 Gypsum Board Surfaces

Gypsum board surfaces shall be dry and shall have all loose dirt and dust removed by brushing with a soft brush, rubbing with a cloth, or vacuum-cleaning prior to application of the first-coat material. A damp cloth or sponge may be used if paint will be water-based.

3.2.5 Mastic-Type Surfaces

Mastic-type surfaces shall be prepared by removing foreign material.

3.2.6 Omitted

3.2.7 Wood Surfaces

Wood surfaces shall be cleaned of foreign matter.

3.2.7.1 Interior Wood Stain

Interior wood surfaces to receive stain shall be sanded. Oak and other open-grain wood to receive stain shall be given a coat of wood filler not less than 8 hours before the application of stain; excess filler shall be removed and the surface sanded smooth.

3.3 MIXING AND THINNING

When thinning is approved as necessary to suit surface, temperature, weather conditions, or application methods, paints may be thinned in accordance with the manufacturer's directions. When thinning is allowed, paints shall be thinned immediately prior to application with not more than 0.5 L of suitable thinner per liter. The use of thinner shall not relieve the Contractor from obtaining complete hiding, full film thickness, or required gloss. Thinning shall not cause the paint to exceed local limits on volatile organic compounds. Paints of different manufacturers shall not be mixed.

3.4 APPLICATION

Painting practices shall comply with applicable state and local laws enacted to insure compliance with Federal Clean Air Standards. Unless otherwise specified or recommended by the paint manufacturer, paint may be applied by brush, roller, or spray. At the time of application, paint shall show no signs of deterioration. Uniform suspension of pigments shall be maintained during application. Each coat of paint shall be applied so dry film shall be of uniform thickness and free from runs, drops, ridges, waves, pinholes or other voids, laps, brush marks, and variations in color, texture, and finish. Hiding shall be complete. Rollers for applying paints and enamels shall be of a type designed for the coating to be applied and the surface to be coated. Special attention shall be given to insure that all edges, corners, crevices, welds, and rivets receive a film thickness equal to that of adjacent painted surfaces. Paints, except water thinned types, shall be applied only to surfaces that are completely free of moisture as determined by sight or touch.

3.4.1 Ventilation

Affected areas shall be ventilated during paint application so that workers exposure to chemical substances shall not exceed limits as established by ACGIH-02, or as required by a more stringent applicable regulation. Interior work zones having a volume of 280 cubic meters or less shall be ventilated at a minimum of two air exchanges per hour. Ventilation in larger work zones shall be maintained by means of mechanical exhaust. Solvent vapors shall be exhausted outdoors, away from air intakes and workers. Return air inlets in the work zone shall be temporarily sealed before start of work until the coatings have dried.

3.4.2 Respirators

Operators and personnel in the vicinity of operating paint sprayers shall wear respirators.

3.4.3 First Coat

The first coat on plaster, gypsum wallboard, and other surfaces shall include repeated touching up of suction spots or overall application of primer or sealer to produce uniform color and gloss. Excess sealer

shall be wiped off after each application. The first coat on both faces of wood doors shall be applied at essentially the same time. Glazed doors and sashes shall be given the specified coating system within 3 weeks of the time they are glazed, but not before the glazing material has set; paint shall overlay glass about 1.78 mm all around. Each varnish coat shall be sanded lightly prior to application of subsequent coats.

3.4.4 Timing

Surfaces that have been cleaned, pretreated, and otherwise prepared for painting shall be given a coat of the specified first coat as soon as practical after such pretreatment has been completed, but prior to any deterioration of the prepared surface. Sufficient time shall elapse between successive coats to permit proper drying. This period shall be modified as necessary to suit weather conditions. Oil-based or oleoresinous solvent-type paints shall be considered dry for recoating when the paint feels firm, does not deform or feel sticky under moderate pressure of the thumb, and the application of another coat of paint does not cause the undercoat to lift or lose adhesion.

3.4.5 Omitted

3.4.6 Omitted

3.4.7 Textured Coating

Application of textured coating, FS TT C 555, shall be as specified in the manufacturer's printed directions at a rate of 1.1 to 1.3 square meters per liter in one coat.

3.4.8 Ferrous-Metal Primer

Primer for ferrous metal shall be applied to ferrous surfaces to receive paint other than asphalt varnish prior to deterioration of the prepared surface. The semitransparent film applied to some pipes and tubing at the mill is not to be considered a shop coat, but shall be overcoated with the specified ferrous-metal primer prior to application of finish coats.

3.5 PIPE COLOR CODE MARKING

Pipes in exposed areas and in accessible pipe spaces shall be provided with color band and titles adjacent to all valves, except those provided at plumbing fixtures, at not more than 12 meter spacing on straight pipe runs, adjacent to change in direction, and on both sides where pipes pass through walls or floors. Color code marking shall be of the color listed in TABLE I and the size listed in TABLE II. The arrows shall be installed adjacent to each band to indicate the direction of flow in the pipe. The legends shall be printed in upper case black letters as listed in TABLE I. Letter sizes shall be as listed in TABLE II. Marking shall be painted or applied using colored, pressure-sensitive adhesive markers of standard manufacture. Paint shall be as specified for insulated and uninsulated piping.

TABLE I. COLOR CODES FOR MARKING PIPE

Material	Band	Arrow*	Legend
Cold water (potable)	Green	White	POTABLE WATER
Fire protection water	Red	White	FIRE PR. WATER
Hot water (domestic)	Green	White	H.W.

Material	Band	Arrow*	Legend
Hot water recirculating (domestic)	Green	White	H.W.R.
High temp. water supply	Yellow	Black	H.T.W.S.
High temp. water return	Yellow	Black	H.T.W.R.
Boiler feed water	Yellow	Black	B.F.
Low temp. water supply (heating)	Yellow	Black	L.T.W.S.
Low temp. water return (heating)	Yellow	Black	L.T.W.R.
Condenser water supply	Green	White	COND. W.S.
Condenser water return	Green	White	COND. W.R.
Chilled water supply	Green	White	C.H.W.S.
Chilled water return	Green	White	C.H.W.R.
Treated water	Yellow	Black	TR. WATER
Chemical feed	Yellow	Black	CH. FEED
Natural gas	Blue	White	NAT. GAS

TABLE II. COLOR CODE MARKING SIZES

Outside Diameter of Pipe Covering (mm)	Width of Color Band (mm)	Arrow Length x Width (mm)	Size of Legend Letters and Numerals (mm)
Less than 38	200	200 x 57	13
38 to 60	200	200 x 57	19
60 to 150	300	200 x 57	31
200 to 225	600	300 x 110	63
Over 250	800	300 x 115	88

3.6 OMITTED

3.7 SURFACES TO BE PAINTED

Surfaces listed in the painting schedules at the end of this section, other than those listed in paragraph SURFACES NOT TO BE PAINTED, shall be painted as scheduled.

3.8 SURFACES NOT TO BE PAINTED

Surfaces in the following areas are not to be painted: attic and chase spaces. In addition surfaces of hardware, fittings, and other factory finished items shall not be painted.

3.9 CLEANING

Cloths, cotton waste and other debris that might constitute a fire hazard shall be placed in closed metal containers and removed at the end of each day. Upon completion of the work, staging, scaffolding, and containers shall be removed from the site or destroyed in an approved manner. Paint and other deposits on adjacent surfaces shall be removed and the entire job left clean and acceptable.

3.10 PAINTING SCHEDULES

The following painting schedules identify the surfaces to be painted and prescribe the paint to be used and the number of coats of paint to be applied. Contractor options are indicated by ------or------ between optional systems or coats.

EXTERIOR PAINTING SCHEDULE

Surface	First Coat	Second Coat	Third Coat
Ferrous metal unless otherwise specified.	2 part Urethane	2 part Urethane	2 part Urethane

INTERIOR PAINTING SCHEDULE

Surface	First Coat	Second Coat	Third Coat
Gypsum board unless Otherwise specified.	FS TT-P-002119 Class II	FS TT-P-002119 Class II	None
Gypsum board: latrine and laundry areas, unless otherwise specified.	FS TT-P-95 Type II Class 3	FS TT-P-95 Type II Class 1	None
Gypsum board: in Shower areas, unless Otherwise specified.	FS TT-P-95 Type II Class 3	FS TT-P-95 Type II Class 1	None
Gypsum board: for walls in heavy traffic areas space as follows: Entries, Lobbies, Corridors, and Stairs.		FS TT-P-002119 Class II	FS TT-P-002119 Class II
Ferrous metal unless otherwise specified.	FS TT-E-545 FS TT-P-645	FS TT-E-508 ----------or----------	 FS TT-E-509 FS TT-E-506
Ferrous metal factory-primed mechanical and electrical equipment.	FS TT-E-489, ---------- SSPC Paint 21, Type I	FS TT-E-489 ----------or---------- SSPC Paint 21 Type I	None None
Galvanized: unless otherwise specified.	SSPC Paint 5	Two coats of paint to match adjacent areas	
Wood: stain and varnish finishes as follows: Window sills and trim,	FS TT-S-711, fill and sand	FS TT-V-85 In addition a fourth coat of	FS TT-V-85 FS TT-V-85

office counter.

Surface	First Coat	Second Coat	Third Coat
Metal: Convector enclosures, electrical conduit runs, metallic tubing, uninsulated ducts and pipes, pipe hangers, louvers, grilles, and air outlets in areas having painted adjacent surfaces.	FS TT-P-645		FS TT-E-508 ------or------- FS TT-E-509
Oil-based caulking compound.	FS TT-P-38	Same as adjacent areas	

END OF SECTION

SECTION 10430

EXTERIOR SIGNAGE

PART 1 GENERAL

1.1 REFERENCES

The publications listed below form a part of this specification to the extent referenced. The publications are referred to in the text by basic designation only.

ALUMINUM ASSOCIATION (AA)

AA DAF-45	(1980) Designation System for Aluminum Finishes

AMERICAN SOCIETY FOR TESTING AND MATERIALS (ASTM)

ASTM B 26	(1996) Aluminum-Alloy Sand Castings
ASTM B 108	(1996) Aluminum-Alloy Permanent Mold Castings
ASTM B 209	(1996) Aluminum and Aluminum-Alloy Sheet and Plate
ASTM B 221	(1996) Aluminum and Aluminum-Alloy Extruded Bars, Rods, Wire, Shapes, and Tubes

NATIONAL ASSOCIATION OF ARCHITECTURAL METAL MANUFACTURERS (NAAMM)

NAAMM AMP 505	(1988) Metal Finishes Manual for Architectural and Metal Products; Section: Applied Coatings

1.2 GENERAL

Exterior signage shall be of the size and type shown on the drawings, shall conform to the requirements specified herein, and shall be provided at the locations indicated. Signs shall be complete with lettering, framing as detailed, and related components for a complete installation. Materials and equipment shall be the standard product of a manufacturer regularly engaged in the manufacture of the products. Items of equipment shall essentially duplicate equipment that has been in satisfactory use at least 2 years prior to bid opening.

1.3 SPECIAL WARRANTIES

Notwithstanding the requirements of Section 01451, CONTRACTOR QUALITY CONTROL, the Contractor shall submit warranties for the following signage materials:

- Exterior panel signs

The warranties shall guarantee that the materials furnished under this contract shall be free of defects in materials, design, and workmanship for a period of 5 years from the date of acceptance. Upon receipt of notice from the Government of failure of any part of these materials during the warranty period, new replacement parts and materials shall be furnished and installed promptly by the Contractor at no additional cost to the Government.

1.4 SUBMITTALS

Government approval is required for submittals with a "GA" designation; submittals having an "FIO" designation are for information only. The following shall be submitted in accordance with Section 01330 SUBMITTAL PROCEDURES:

Data

Exterior Signs; FIO.

Manufacturer's descriptive data, catalog cuts, and construction details relative to materials, dimension of individual components, profiles, and finishes for each type of sign required.

Drawings

Exterior Signs; GA.

Provide drawings showing elevations of each type of sign; dimensions, details, and methods of mounting or anchoring; shape and thickness of materials; and details of construction. Provide message list for each sign required, including large scale details of wording and lettering layout. Provide setting drawings, templates, and directions for installation. A schedule showing the location of each sign type shall be included.

Instructions

Exterior Signs; FIO.

Manufacturer's installation instructions and cleaning instructions.

Samples

Exterior Signs; GA.

One sample of each type of sign. Each sample shall consist of a complete sign panel with letters and symbols. Samples may be installed in the work, provided each sample is identified and location recorded. Provide two samples of manufacturer's standard color chips for each material requiring color selection.

1.5 DELIVERY AND STORAGE

Materials shall be wrapped for shipment and storage, delivered to the jobsite in manufacturer's original packaging, and stored in a clean, dry area.

PART 2 PRODUCTS

2.1 COLOR AND CONTRAST

Color of products shall be as shown on the drawings and shall match approved color samples. Characters and symbols shall contrast with their background - light characters on a dark background or dark characters on a light background.

2.2 CHARACTER PROPORTIONS AND HEIGHTS

Characters on signs shall be as shown on the drawings.

2.3 ALUMINUM ALLOY PRODUCTS

Aluminum alloy products shall conform to ASTM B 209 for sheet or plate, ASTM B 221 for extrusions and ASTM B 26 or ASTM B 108 for castings. Aluminum extrusions shall be provided at least 1.6 mm thick and aluminum plate or sheet at least 1.6 mm thick.

2.4 CAST ALUMINUM

Cast aluminum shall be in accordance with ASTM B 108 or ASTM B 26. Components shall be fabricated with sharp corners, flat faces, and accurate profiles. Burrs and rough spots shall be removed and polished. Faces shall be finished to a uniform high luster.

2.5 FASTENERS

Use concealed fasteners fabricated from non-corrosive metals, compatible with the sign material and mounting surface.

2.6 EXTERIOR PANEL SIGNS

2.6.1 Shop Fabrication And Manufacture

2.6.1.1 Workmanship

Work shall be assembled in the shop, insofar as practicable, ready for installation at the site. Work that cannot be shop assembled shall be given a trial fit in the shop to ensure proper field assembly. Holes for bolts and screws shall be drilled or punched. Drilling and punching shall produce clean, true lines and surfaces. Exposed surfaces of work shall have a smooth finish and exposed riveting shall be flush. Fastenings shall be concealed where practicable. Joints exposed to the weather shall be formed to exclude water. Drainage and weep holes shall be included as required to prevent condensation buildup.

2.6.1.2 Dissimilar Materials

Where dissimilar metals are in contact, or where aluminum is in contact with concrete, mortar, masonry, wet or pressure-treated wood, or absorptive materials subject to wetting, the surfaces shall be protected with a coat of asphalt varnish or a coat of zinc-molybdate primer to prevent galvanic or corrosive action.

2.67.2 Sign Panels

Comply with requirements indicated for materials, thicknesses, finishes, colors, design, stage, size, and details of construction. Produce smooth, even level sign panel surfaces constructed to remain flat under installed conditions within a tolerance of plus or minus 1.5 mm measured diagonally. Fabricate unframed panel signs with edges mechanically and smoothly finished with covers rounded to the radius indicated.

2.6.3 Posts

One-piece aluminum posts shall be provided with minimum 1.6 mm wall thickness. Caps shall be provided for each post.

2.6.3.1 Mounting

Permanent mounting shall be provided by embedding posts in concrete as shown.

2.6.4 Graphics

Signage graphics shall conform to the requirements indicated for size, style, spacing, content, position, material, finishes, and colors of letters and symbols.

2.6.5 Messages

See drawings for message content. Typeface: Helvetica medium, except the “United States Postal Service” and postal logo, which shall be standard as used by the United States Post Office. Type size as indicated.

2.7 FINISHES

Metal finishes shall be in accordance with NAAMM AMP 505.

2.7.1 Aluminum Finish

Surfaces shall be cleaned, primed, and given organic coating of a semi-gloss baked enamel or two component acrylic polyurethane finish in accordance with NAAMM AMP 505, with a minimum dry film thickness of not less than 0.04 mm. Finish designation shall conform to the system established by the Aluminum Association for designating aluminum finishes, AA DAF-45.

PART 3 EXECUTION

3.1 INSTALLATION

Signs shall be installed in accordance with approved manufacturer's instructions at locations shown on the drawings. Signs shall be installed plumb and true at mounting heights indicated, and by method shown or specified. Signs mounted on other surfaces shall not be installed until finishes on such surfaces have been completed.

3.1.1 Anchorage

Anchorage shall be in accordance with approved manufacturer's instructions. Anchorage not otherwise specified or indicated shall include slotted inserts, expansion shields, and power-driven fasteners when approved for concrete; toggle bolts and through bolts for masonry; machine carriage bolts for steel; lag bolts and screws for wood.

3.1.2 Protection and Cleaning

The work shall be protected against damage during construction until acceptance by the Government After installation, sign surfaces shall be cleaned in accordance with manufacturer's instructions.

END OF SECTION

This page intentionally blank

SECTION 10440

INTERIOR SIGNAGE

PART 1 GENERAL

1.1 REFERENCES

The publications listed below form a part of this specification to the extent referenced. The publications are referred to in the text by basic designation only.

CODE OF FEDERAL REGULATIONS (CFR)

36 CFR 1191	Americans with Disabilities Act (ADA) Accessibility Guidelines for Buildings and Facilities

FEDERAL STANDARDS (FED-STD)

FED-STD 795	(Basic) Uniform Federal Accessibility Standards

1.2 GENERAL

Interior signage shall be of the sizes and types shown on the drawings, shall conform to the requirements specified herein, and shall be provided at the locations indicated. Signs shall be complete with lettering and related components for a complete installation. Signs shall be the standard product of a manufacturer regularly engaged in the manufacture of such products and shall essentially duplicate signs that have been in satisfactory use at least 2 years prior to bid opening.

1.3 SUBMITTALS

Government approval is required for submittals with a "GA" designation; submittals having an "FIO" designation are for information only. The following shall be submitted in accordance with Section 01330 SUBMITTAL PROCEDURES:

SD-01 Data

Interior Signage; FIO.

Manufacturer's descriptive data, catalogs cuts, installation and cleaning instructions.

SD-04 Drawings

Interior Signage; FIO.

Drawings showing elevations of each type of sign, dimensions, details and methods of mounting or anchoring, shape and thickness of materials and details of construction. A schedule showing the location of each sign type shall be included.

SD-14 Samples

Interior Signage; FIO.

Samples of each type of sign showing typical quality and workmanship. The samples may be installed in the work, provided each sample is identified and location recorded.

a. Sign on public toilet door.

b. Changeable message door sign on Living/Sleeping room entrance doors.

Two samples of manufacturer's standard color chips for each material requiring color selection.

1.4 DELIVERY AND STORAGE

Materials shall be delivered to the jobsite in manufacturer's original packaging and stored in a clean, dry area.

PART 2 PRODUCTS

2.1 COLOR

Color shall be as indicated.

2.2 OMITTED

2.3 OMITTED

2.4 PLAQUE SIGNS

Plaque signs shall be a modular type signage system complete with manufacture's recommended standard components as indicated. Signs shall be fabricated of Type ES melamine plastic, or acrylic.

2.4.1 Standard Modular Plaque Signs

Plaque signs shall consist of matte finish acrylic or ES plastic laminated to acrylic or plexigass back. Thickness and size of signs shall be as shown on the drawings. Corners of signs shall be squared and ends shall be fully finished as shown.

2.4.2 Modular Changeable Message Strip Plaque Signs

Changeable message strip plaque sign system shall consist of matte finish with message slot for insertion of changeable message strip and messages as indicated. Thickness and size of signs shall be as shown on the drawings. Individual message strips to permit removal, change and reinsertion shall be provided. Corners of signs shall be squared and ends shall be fully finished as shown.

2.4.3 Type of Mounting For Plaque Signs

Surface mounted signs shall be mounted with double-faced tape.

2.5 GRAPHICS

2.5.1 Tactile Graphics

Signage for public toilet shall be tactile (perceptible to touch) and shall comply with 36 CFR 1191. The 36 CFR 1191 requirements must provide equal or greater accessibility than the requirements of FED-STD 795. Characters, symbols or pictographs on tactile signs shall meet 36 CFR 1191 Grade 2 braile. Characters and symbols shall contrast with their background.

2.5.2 Graphics Application

Signage graphics shall conform to the following:

a. Omitted.

b. Message shall be applied to panel using the silkscreen process except where indicated otherwise. Silkscreened images shall be executed with photo screens prepared from original art. No handcut screens will be accepted. Original art shall be defined as artwork that is a first generation reproduction of the specified art. Edges and corners shall be clean.

c. Tactile characters and symbols shall be raised 0.8 mm minimum from the sign face. Signs shall be of one piece construction. Add-on characters are not acceptable.

2.5.3 Messages

See drawings and schedule for message content, typeface, type size, and color.

PART 3 EXECUTION

3.1 INSTALLATION

Signs shall be installed in accordance with approved manufacturer's instructions at locations shown on the drawings. Signs shall be installed plumb and true at mounting heights indicated, and by method shown or specified. Signs on doors or other surfaces shall not be installed until finishes on such surfaces have been installed.

3.1.1 Omitted

3.1.2 Protection and Cleaning

The work shall be protected against damage during construction. Sign surfaces shall be cleaned in accordance with the manufacturer's approved instructions.

END OF SECTION

SECTION 10550

MAILBOXES

PART 1 GENERAL

1.1 SUMMARY (Not Applicable)

1.2 OMITTED

1.3 SUBMITTALS

Government approval is required for submittals with a "GA" designation; submittals having an "FIO" designation are for information only. The following shall be submitted in accordance with Section 01330 SUBMITTAL PROCEDURES:

SD-01 Data

Manufacturer's descriptive data shall indicate type of mailboxes, parcel lockers, materials, finishes, loading/unloading procedures, types of locks and installation instructions.

SD-04 Drawings

Shop drawings shall indicate material thickness, type, grade and class, rough opening dimensions, overall finish dimensions, compartment size, number of compartments and arrangement, construction details, door construction and hardware, locking, method of identification, anchorage and erection details.

1.4 GENERAL REQUIREMENTS

Furnish and install rear loading horizontal type mailboxes, trim and accessories in the quantities and at the locations indicated on the drawings.

1.5 HANDLING AND DELIVERY

Mailboxes shall be adequately packaged and protected during shipment and shall be inspected for damage or stain upon delivery to the job site. They shall be carefully handled to avoid damage and shall be stored in a dry weathertight, ventilated area until installation.

PART 2 PRODUCTS

2.1 MAILBOX TYPE

Mailboxes shall be rear loading horizontal type with a sheet aluminum removable rear covers, individual compartment size shall be minimum 125 mm high by 150 mm wide by 376 mm deep.

2.1.1 Removable rear covers shall be sheet aluminum strengthened with formed sheet aluminum stiffeners.

2.2 COMPARTMENT CONSTRUCTION

Mail compartments shall be manufacturer's standard compartment made of double-wall high strength sheet aluminum with stiffener frames.

2.3 COMPARTMENT DOORS

Compartment doors shall be manufacturer's standard doors fabricated of extruded aluminum not less than 3 mm thick with integral reinforcing ribs. Doors shall swing on concealed hinges.

2.4 COMPARTMENT DOOR LOCKS

Each mail compartment door shall be provided a lock, keyed different from all other locks supplied for the project. The lock shall be a five pin tumbler cam type with two change keys per lock and a minimum of 1,000 available key changes.

2.5 COMPARTMENT IDENTIFICATION

Each compartment door shall have 13 mm high four digit numbers permanently engraved in the face of the door. Numbering shall be in sequence vertically from left to right. The same number shall be permanently engraved on the back of the mail compartment to be clearly visible by the mail delivery person.

2.6 TRIM

Trim shall be manufacturer's standard aluminum trim to match mailboxes. Trim shall have mitered corners.

2.7 FINISH

Finish on mailbox fronts and associated trim shall be satin aluminum, clear anodized 628.

2.8 PARCEL LOCKERS

Parcel lockers shall be front loading. The configuration of compartments and compartment sizes including the mail collection unit shall be as indicated on the drawings.

2.8.1 Parcel lockers' finish, trim and construction shall be the same as that specified for the mail compartments.

2.8.2 Parcel lockers shall have a two-key locking system. One key will open the locker but will then be automatically retained in its lock until removed by using the control key.

2.9 LETTER SLOT

Letter slot shall consist of a minimum 2 mm thick aluminum frame with welded corners and a minimum 3 mm thick aluminum door. Minimum door size shall be 280 mm wide by 95 mm high. Door shall have a full width piano hinge. "U.S. MAIL" shall be engraved on the door using 25 mm high letters. Finish shall match mail boxes.

PART 3 EXECUTION

3.1 INSTALLATION

Mailbox units and accessories shall be installed in accurately framed openings with units plumb and adequately secured in position. Installation shall comply with current U.S. Postal Service regulations.

END OF SECTION

This page intentionally blank

SECTION 10800

TOILET ACCESSORIES

PART 1 GENERAL

1.1 REFERENCES

The publications listed below form a part of this specification to the extent referenced. The publications are referred to in the text by basic designation only.

AMERICAN SOCIETY FOR TESTING AND MATERIALS (ASTM)

ASTM C 1036 (1991) Flat Glass

COMMERCIAL ITEM DESCRIPTIONS (CID)

CID A-A-2398 (Rev B) Curtain, Shower and Window (Metric - SI)

1.2 SUBMITTALS

Government approval is required for submittals with a "GA" designation, submittals having an "FIO" designation are for information only. The following shall be submitted in accordance with Section 01330 SUBMITTAL PROCEDURES:

SD-01 Data

Finishes; FIO. Accessory Items; FIO.

Manufacturer's descriptive data and catalog cuts indicating materials of construction, fasteners proposed for use for each type of wall construction, mounting instructions, and operation instructions.

SD-14 Samples

Finishes; FIO. Accessory Items; FIO.

One sample of each accessory proposed for use. Approved samples may be incorporated into the finished work, provided they are identified and their locations noted.

1.3 DELIVERY, STORAGE, AND HANDLING

Toilet accessories shall be wrapped for shipment and storage, delivered to the jobsite in manufacturer's original packaging and stored in a clean, dry area protected from construction damage and vandalism.

PART 2 PRODUCTS

2.1 MANUFACTURED UNITS

Toilet accessories shall be provided where indicated in accordance with paragraph SCHEDULE. Porcelain type, tile-wall accessories are specified in Section 09310 CERAMIC TILE. Each accessory item shall be complete with the necessary mounting plates, shall be of sturdy construction with corrosion resistant surface.

2.1.1 Anchors and Fasteners

Anchors and fasteners shall be capable of developing a restraining force commensurate with the strength of the accessory to be mounted and shall be suited for use with the supporting construction. Exposed fasteners shall have oval heads and shall be finished to match the accessory.

2.1.2 Finishes

Except where noted otherwise, finishes on metal shall be provided as follows:

Metal	Finish
Stainless steel	No. 4 satin finish
Carbon steel, copper alloy, and brass	Chromium plated, bright

2.2 ACCESSORY ITEMS

Accessory items shall conform to the requirements specified below.

2.2.1 Omitted

2.2.2 Grab Bar (GB)

Grab bar shall be 1.3 mm, 32 mm OD Type 304 stainless steel. Grab bar shall be form and length as indicated. Mounting flange shall have set screw mounting holes concealed on the lip of the flange. Grab bar shall have satin finish. Installed bars shall be capable of withstanding a 2.225 kN vertical load without coming loose from the fastenings and without obvious permanent deformation. Space between wall and grab bar shall be 38 mm.

2.2.3 Medicine Cabinet (MC)

Medicine cabinet shall be constructed with cold-rolled carbon steel sheet of not less than 0.76 mm thick, formed from a single sheet of steel or shall have mechanically formed spot welded or any other suitable joints. Width, height and depth of cabinet shall be in accordance with paragraph SCHEDULE.

2.2.3.1 Omitted

2.2.3.2 Swinging Door Cabinet, Class 2

Swinging door cabinet assembly including the lighting arrangement shall be as indicated. Assembly shall be recess mounted. Cabinet shall be located centrally behind the door and shall contain a minimum of two shelves. Door hinges shall be stainless steel or carbon steel. Magnets used in door catches shall be permanent type. Doors shall be with a mirror.

2.2.4 Glass Mirrors

Glass for mirrors shall be Type I transparent flat type, Class 1. Glazing Quality q1 6 mm thick conforming to ASTM C 1036. Glass color shall be clear. Glass shall be coated on one surface with silver coating, copper protective coating, and mirror backing paint. Silver coating shall be highly adhesive pure silver coating of a thickness which shall provide reflectivity of 83 percent or more of incident light when viewed through 6 mm thick glass, and shall be free of pinholes or other defects. Copper protective coating shall be pure bright reflective copper, homogeneous without sludge, pinholes or other defects, and shall be of proper thickness to prevent "adhesion pull" by mirror backing paint. Mirror backing paint shall consist of two coats of special scratch and abrasion-resistant paint and shall be baked in uniform thickness to provide a protection for silver and copper coatings which will permit normal cutting and edge fabrication.

2.2.5 Omitted

2.2.6 Mirror, Tilt (MT)

Tilt mirror shall be surface mounted and shall provide full visibility for person in a wheelchair. Mirror shall have adjustable tilt, extending at least 100 mm from the wall at the top and tapering to 25 mm at the bottom. Size shall be in accordance the drawings. Glass for mirrors shall conform to ASTM C 1036 and paragraph Glass Mirrors.

2.2.7 Omitted

2.2.8 Combination Paper Towel Dispenser/Waste Receptacle Units (PTDWR)

Dispenser/receptacle shall be semi-recessed and shall have a capacity of 400 sheets of C-fold, single-fold, or quarter-fold towel. Waste receptacle shall be designed to be locked in unit and removable for service. Locking mechanism shall be concealed tumbler key lock. Waste receptacle shall have a capacity of 45 L. Unit shall be fabricated of not less than 0.8 mm stainless steel welded construction with all exposed surfaces having a satin finish. Waste receptacle that accepts reusable liner standard for unit manufacturer shall be provided.

2.2.9 Omitted

2.2.10 Omitted

2.2.11 Shower Curtain (SC)

Shower curtain shall conform to CID A-A-2398, Style I, size to suit conditions.

2.2.12 Shower Curtain Rods (SCR)

Shower curtain rods shall be Type 304 stainless steel 32 mm OD by 1.24 mm minimum straight to meet installation conditions.

2.2.13 Soap Dispenser (SD)

Soap dispenser shall be surface mounted, liquid type consisting of a vertical Type 304 stainless steel tank with holding capacity of 1.2 L with a corrosion-resistant all-purpose valve that dispenses liquid soaps, lotions, detergents and antiseptic soaps.

2.2.14 Soap Holder (SH)

Soap holder shall be surface mounted Type 304 stainless steel. Separate supports shall be stainless steel.

2.2.15 Omitted

2.2.16 Omitted

2.2.17 Omitted

2.2.18 Towel Bar (TB)

Towel bar shall be stainless steel with a minimum thickness of 0.38 mm. Bar shall be minimum 19 mm diameter, or 16 mm square. Finish shall be satin.

2.2.19 Towel Pin (TP)

Towel pin shall have concealed wall fastenings, and a pin integral with or permanently fastened to wall flange. Maximum projection shall be 100 mm. Design shall be consistent with design of other accessory items.

2.2.20 Toilet Tissue Dispenser (TTD)

Toilet tissue holder shall be Type II - surface with two rolls of tissue mounted horizontally. Cabinet shall be stainless steel, satin finish.

2.2.21 Toothbrush and Tumbler Holder (TTH)

Toothbrush and tumbler holder shall be stainless steel, surface mounted. Holder shall hold a minimum of four toothbrushes in a vertical position. Size of hole for securing tumbler shall be 57 plus or minus 3 mm in diameter.

2.2.22 Omitted

2.2.23 Toilet Seat Cover Dispenser (TSCD)

Toilet seat cover dispensers shall be stainless steel and be surface mounted. Dispenser shall have a minimum capacity of 500 seat covers.

2.2.24 Omitted

2.2.25 Omitted

2.2.26 Mop and Broom Holder (MBH)

Mop and broom holder shall be surface mounted stainless steel mounting base with four spring-loaded, rubber cam holders to accommodate handles from 22 mm to 32 mm diameter. Holder shall have 200 mm deep stainless steel shelf and stainless steel hooks.

PART 3 EXECUTION

3.1 INSTALLATION

Toilet accessories shall be securely fastened to the supporting construction in accordance with the manufacturer's approved instructions. Accessories shall be protected from damage from the time of installation until acceptance.

END OF SECTION

This page intentionally blank

SECTION 10900

STORAGE LOCKERS

PART 1 GENERAL

1.1 REFERENCES

The publications listed below form a part of this specification to the extent referenced. The publications are referred to in the text by basic designation only.

AMERICAN SOCIETY FOR TESTING AND MATERIALS (ASTM)

ASTM A 123	(1989a) Zinc (Hot-Dip Galvanized) Coatings on Iron and Steel Products
ASTM A 446	(1989) Steel Sheet, Zinc-Coated (Galvanized) by the Hot-Dip Process, Structural (Physical) Quality
ASTM A 525	(1990) Steel Sheet, Zinc-Coated (Galvanized) by the Hot-Dip Process

1.2 GENERAL DESCRIPTION

Storage lockers shall be double tier lockers meeting the following minimum specifications. Lockers shall be sized as shown on the drawings. The Contractor shall verify all measurements and shall take all field measurements necessary before fabrication. Items specified to be galvanized, when practicable and not indicated otherwise, shall be hot-dip galvanized after fabrication. Galvanizing shall be in accordance with ASTM A 123, ASTM 446, or ASTM 525, as applicable. Materials and parts necessary to complete each item, even though such work is not definitely shown or specified, shall be included. Poor matching of holes for fasteners shall be cause for rejection. Thickness of metal and details of assembly and supports shall provide strength and stiffness.

1.3 SUBMITTALS

Government approval is required for submittals with a "GA" designation; submittals having an "FIO" designation are for information only. The following shall be submitted in accordance with Section 01330 SUBMITTAL PROCEDURES:

SD-04 Drawings

Storage Lockers; FIO.

Detail drawings indicating locker layout, materials, member size, thickness, gauge, hardware, fasteners and construction details. Drawings shall include catalog cuts, erection details, manufacturer's descriptive data and installation instruction.

1.4 WORKMANSHIP

Drilling and punching shall produce clean true lines and surfaces. Exposed surfaces of work in place shall have a smooth finish. Corner joints shall be well formed, and in true alignment. Work shall be accurately set to established lines and elevations and securely fastened in place. Installation shall be in accordance with manufacturer's installation instructions and approved drawings, cuts, and details.

1.5 ANCHORAGE

Anchorage shall be provided for fastening lockers securely in place. Anchorage to concrete shall be as recommended by the locker manufacturer.

PART 2 PRODUCTS

2.1 FINISH

Finish shall be the manufacturer's standard semigloss gray enamel with polyurethane base or equivalent.

2.2 STEEL MESH

Steel mesh shall be 38 mm, 2mm expanded metal.

2.3 FRAMES

2.3.1 Inner Door Frames

Thirty-eight mm by 25 mm, 3 mm steel angle or 25 mm by 38 mm by 25 mm, 3 mm formed steel channel.

2.3.2 Outer Door Frames

Thirty-eight mm by 25 mm, 2 mm steel channel or 32 mm by 25 mm, 3 mm steel angle.

2.3.3 Side Panel Frames

Thirty-two mm by 32 mm, 2 mm steel angle or 32 mm by 25 mm, 3 mm steel angle.

2.4 SHELVES

Middle and bottom shelves shall be 1 mm galvanized sheet metal with stiffening ribs at 300 mm center-to-center.

2.5 BACK

Backs shall be 1 mm galvanized sheet steel, firmly secured to the locker frames.

2.6 DOOR UNITS

Door units shall be prehung with transom including 50 mm by 50 mm steel pin butt hinges and 12-gauge formed metal padlock hasp and door stops.

2.7 TOPS

Furnish lockers with tops fabricated of 38 mm by #16 expanded metal with matching enamel finish secured firmly to locker frames.

PART 3 EXECUTION

3.1 INSTALLATION

Storage lockers shall be assembled and installed in place in accordance with the approved manufacturer's installation instructions. Anchorage to concrete base shall be according to the manufacturer's recommendations.

END OF SECTION

This page intentionally blank

SECTION 10999

FIRE EXTINGUISHER CABINETS

PART 1 - GENERAL

1.1 APPLICABLE PUBLICATIONS

The publication listed below forms a part of this specification to the extent referenced. The publication is referred to in the text by the basic designation only.

National Fire Protection Association (NFPA) Publication:

NFPA Standard 10, 1998 edition, Chapter 3, Distribution of Fire Extinguishers

1.2 GENERAL REQUIREMENTS

The contract drawings indicate the locations and details for the various sized extinguishers.

1.3 SUBMITTALS

1.3.1 Shop Drawings

Shop drawings shall be submitted in accordance with Section 01330 SUBMITTAL PROCEDURES and the CONTRACT CLAUSES. Shop drawings shall indicate thickness of materials, depth of cabinet and installation procedures.

PART 2 - PRODUCTS

2.1 FIRE EXTINGUISHER CABINETS

Provide flat face rolled edge semi-recessed cabinets at locations shown on drawings. Cabinet shall have minimum interior box dimensions of 700 mm high, 200 mm wide and 200 mm deep. Door shall be non-locking as required by NFPA 10 and labeled with minimum 25 mm letters ”FIRE EXTINGUISHER”. The fire extinguishers shall be 4A-60BC to sit on base of Cabinet.

2.1.1 Materials

The semi-recessed cabinets shall be constructed of minimum 1 mm steel with interior color to match wall color. All trim and doors are to be constructed of extruded aluminum and all corners are to be mitered. Trim and doors are to have a clear satin anodized finish. Doors are to be full glass and are to be glazed with tempered glass. Doors shall be fully hinged with piano type hinge and furnished with handle and latch, no key locking devices will be used. Bubble faced type fire extinguish cabinet shall not be used.

PART 3 - EXECUTION

3.1 INSTALLATION

Cabinets shall be installed in accordance with approved instructions.

3.2 CLEANING

Windows of doors shall be cleaned on both exterior and interior.

END OF SECTION

SECTION 12320

CABINETS AND COUNTERTOPS

PART 1 GENERAL

1.1 REFERENCES

The publications listed below form a part of this specification to the extent referenced. The publications are referred to in the text by basic designation only.

BUILDERS HARDWARE MANUFACTURERS ASSOCIATION (BHMA)

BHMA A156.9	(1988) Cabinet Hardware

KITCHEN CABINET MANUFACTURERS ASSOCIATION (KCMA)

KCMA A161.1	(1990; Errata May 1991) Recommended Performance & Construction Standards for Kitchen and Vanity Cabinets

NATIONAL ELECTRICAL MANUFACTURERS ASSOCIATION (NEMA)

NEMA LD 3	(1991) High-pressure Decorative Laminates

1.2 DESIGN

Cabinets shall be wood, factory-fabricated to “custom grade” and finished in the manufacturer's standard sizes and finishes of the type, design, and configuration indicated. Cabinets shall be constructed as specified and shall meet the requirements of KCMA A161.1. Wall and base cabinet assemblies shall consist of individual units joined into continuous sections. Fastenings shall be accomplished to permit removal and replacement of individual units without affecting the remainder of the installation. Counters shall be provided with watertight sink rim when indicated. Drawers shall be removable and shall be equipped with position stops to avoid accidental complete withdrawals. Shelves shall be fixed or adjustable as indicated.

1.3 SUBMITTALS

Government approval is required for submittals with a "GA" designation; submittals having an "FIO" designation are for information only. The following shall be submitted in accordance with Section 01330 SUBMITTAL PROCEDURES:

SD-01 Data

Cabinets and Countertops; FIO.

Manufacturer's printed data, catalog cuts, and installation instructions.

SD-04 Drawings

Cabinets and Countertops; FIO.

Drawings showing each type of cabinet and related item, and clearly indicating the complete plan and elevations of the cabinets and accessories and pertinent details of construction, fabrication, and attachments.

SD-09 Reports

Cabinets and Countertops; FIO.

Test reports shall certify that all cabinets comply with the requirements of KCMA A161.1. Tests shall be conducted by independent laboratories approved by KCMA. KCMA certification seals affixed to the cabinets will be accepted in lieu of certified test reports.

SD-14 Samples

Cabinets and Countertops; FIO.

In lieu of individual samples, complete minimum size cabinets may be furnished as samples. Mockup units are not acceptable. Samples shall be of sufficient size to show color pattern and method of assembly.

a. Counter top and backsplash - One section, containing both.

b. Door and drawer front - One of each, with hardware mounted.

c. Omitted

d. Stain/color samples shall be approximately 50 mm by 75 mm.

1.4 DELIVERY AND STORAGE

Cabinets shall be delivered to the job site wrapped in a protective covering. Cabinets shall be stored in an adequately ventilated, dry location that is free of dust, water, or other contaminants and in a manner to permit access for inspection and handling. Cabinets shall be handled carefully to prevent damage to the surfaces. Damaged items that cannot be restored to like-new condition shall be replaced.

PART 2 PRODUCTS

2.1 CABINETS

Wall and base cabinets shall be of the same construction and same outside appearance. Door design shall be solid oak ~~stile~~ frame with raised oak veneer panel inset. Shelves shall be fully adjustable as indicated. Adjustable shelves shall be capable of adjusting on approximately 31 mm increments. Shelves shall be supported by self-locking clips or wood dowels. Dowels shall be approximately 8 mm in diameter by 39 mm long. Dowels shall be inserted into borings for the shelf adjustments. Shelves shall be minimum 13

mm thick plywood or minimum 13 thick 20 kg density particle board. Drawer fronts shall be 11 mm solid wood panel. Provide finger relief on door and drawer edge for pulling open.

2.1.1 Frame Type Cabinets

The cabinets shall be constructed with frame fronts and solid ends, or frame construction throughout. Frame members shall be 19 mm thick by 38 mm wide; kiln-dried hardwood, glued together, and shall be either mortised and tenoned, dovetailed or doweled, nailed, stapled or screwed. Top and bottom corners shall be braced with either hardwood blocks that are glued together with water-resistant glue and nailed in place, or metal or plastic corner braces. Backs of wall cabinets shall be 3 mm thick plywood or tempered hardboard. Backs of base cabinets shall be 9 mm thick hardwood plywood or 9 mm thick, 20 kg density particle board. Bottoms of cabinets shall be minimum 9 mm thick plywood good grade and shall be braced with wood members glued in place. Cabinet ends shall be 16 mm thick hardwood plywood.

2.2 COUNTERTOPS AND BACKSPLASH

2.2.1 General

Countertop and backsplash shall be constructed of 19 mm thick plywood or 19 mm thick, 20 kg density particle board core and shall be post formed cove type. Cove type shall be a single unit with self-edging and plastic laminate coved at the juncture of the countertop and backsplash. Backsplash shall be not less than 88 mm high. Edging and trim shall consist of plastic laminate cut and fitted to all exposed edges. End splashes constructed of 19 mm plywood or 19 mm thick, 20 kg density particle board core shall be supplied.

2.2.2 Sink Rims

Sink rims shall be of the corrosion-resistant steel clamping type, sized to the sink, and a standard product of a manufacturer regularly producing this type of equipment.

2.3 FINISH

2.3.1 Cabinet Finish

Cabinets shall be provided with a factory-applied durable finish of a type standard with the manufacturer. Natural finish wood doors, drawer fronts, cabinet fronts, and exposed cabinet sides shall be fabricated of wood which will be free of extreme color variations within each panel or between adjacent panels. Exposed exterior surfaces shall be oak hardwood or grade A-A oak hardwood veneer with natural stain and sprayed on polyurethane factory applied finish. Colors shall be selected from manufacturer's standard.

2.3.2 Omitted

2.3.3 Plastic Laminates on Countertops

Continuous sheets of longest lengths practicable shall be provided. Joints in surface sheeting shall be tight and flush and held to a practicable minimum. When the countertop and backsplash are one unit, PF42 plastic laminate shall be used. Plastic laminate shall conform to the requirements of LD 3 and plastic laminate adhesive shall be contact type applied to both surfaces. For cove type countertops, the

post-forming plastic laminate shall not be bent to a radius smaller than the limit recommended by the plastic manufacturer. Design, color, and finish shall be as indicated.

2.3.4 Backer Sheets

Backer sheets of high pressure plastic laminate, shall conform to NEMA LD 3, Grade BK20 and shall be applied to the underside of all core material. Design, color, and finish shall be selected from manufacturer's standard.

2.4 HARDWARE

Hardware shall conform to BHMA A156.9, shall be suitable for kitchen cabinet use, and shall include all miscellaneous hardware for a complete installation. Door hinges shall be self-closing type. Drawer runners shall have nylon rollers standard with the manufacturer. Hardware and fastenings for doors and drawers with particle board cores shall be of the through-bolt type. The types and finishes of hardware shall be as follows:

	BHMA DESIGNATION	
TYPE	NUMBER	FINISH
Hinges	B01501	Wrought brass or bronze
Pulls	B22011	Wrought brass or bronze
Drawer Slides, Glides and Rollers	B85061	Wrought steel plastic rollers ball bearing

PART 3 EXECUTION

3.1 INSTALLATION

Cabinets shall be installed level, plumb, and true to line, and shall be attached to the walls or floors with suitable devices to securely anchor each unit. Countertops, accessories, and hardware shall be installed as indicated. Installation shall be in accordance with the manufacturer's approved printed instructions. The inner edge of sink cut-outs in laminated plastic tops shall be painted with a coat of semigloss enamel paint and sink flanges shall be set in a bed of sealant. Closer and filler strips and finish moldings shall be provided as required. Prior to final acceptance, doors shall be aligned, hardware adjusted, and cabinets left in a clean neat condition.

END OF SECTION

SECTION 12490

WINDOW BLINDS, SHADES, AND DRAPERY HARDWARE

PART 1 GENERAL

1.1 REFERENCES

The publications listed below form a part of this specification to the extent referenced. The publications are referred to in the text by basic designation only.

FEDERAL SPECIFICATION (FS)

FS AA-V-00200 (Rev B) Venetian Blinds

1.2 GENERAL

Horizontal blinds shall be provided as indicated, complete with necessary brackets, fittings, and hardware. Each window covering type utilized shall be a complete unit produced by one manufacturer. Equipment shall be mounted as indicated and shall be manually operated. Windows to receive a covering shall be completely covered. The Contractor shall take measurements at the building and shall be responsible for the proper fitting and hanging of the equipment. Color shall be as specified in Section ~~09915 COLOR SCHEDULE~~ 00860, Part II.

1.3 SUBMITTALS

Government approval is required for submittals with a "GA" designation; submittals having an "FIO" designation are for information only. The following shall be submitted in accordance with Section 01330 - SUBMITTAL PROCEDURES:

SD-01 Data

Window Coverings and Hardware; FIO.

Manufacturer's data composed of catalog cuts, brochures, and product information.

SD-04 Drawings

Window Coverings and Hardware; FIO.

Drawings showing fabrication and installation details. The manufacturer's descriptive data will be acceptable, provided this literature accurately shows the items proposed to be furnished and the method of installation. Drawings shall show layout of blinds or shades, lengths and locations of track, direction of draw, and mounting details.

SD-14 Samples

Window Coverings and Hardware; FIO.

Three samples of each type and color of window covering specified. Blind slat shall be 150 mm in length for each color. Drapery track shall be 150 mm in length.

SD-19 Operations and Maintenance Manuals

Window Coverings and Hardware; FIO.

Maintenance instructions for window coverings.

1.4 DELIVERY AND STORAGE

The Contractor shall be responsible for the receipt, storage, and handling of materials and supplies necessary to provide a complete installation. Window coverings shall be delivered to the project site in the manufacturer's original unopened containers. Materials shall be stored flat in a clean dry area with temperature maintained above 10 degrees C.

PART 2 PRODUCTS

2.1 WINDOW BLINDS

Each blind, including hardware, accessory items, mounting brackets and fastenings, shall be provided as a complete unit produced by one manufacturer. All parts shall be one color and match the color of the blind slat. Steel features shall be treated for corrosion resistance.

2.1.1 Horizontal Blinds

Horizontal blinds shall conform to FS AA-V-00200, Type II 25 mm, except as modified below. Blind units shall be capable of nominally 180-degree partial tilting operation and full-height raising. Blinds shall be inside mount.

2.1.1.1 Head Channel and Slats

Head channel shall be steel not less than 1 mm for Type II. Slats shall be aluminum, not less than 0.0080 inch thick, and of sufficient strength to prevent sag or bow in the finished blind. A sufficient amount of slats shall be provided to assure proper control, uniform spacing, and adequate overlap.

2.1.1.2 Controls

The slats shall be tilted by a transparent tilting wand, hung vertically by its own weight, and shall swivel for easy operation. The tilter control shall be of enclosed construction. All moving parts and mechanical drive shall be made of compatible materials which do not require lubrication during normal expected life. The tilter shall tilt the slats to any desired angle and hold them at that angle so that any vibration or movement of ladders and slats will not drive the tilter and change the angle of slats. A mechanism shall be included to prevent over tightening. The wand shall be of sufficient length to reach to within 1500 mm of the floor.

2.1.1.3 Intermediate Brackets

Intermediate brackets shall be provided for installation of blinds 1200 mm wide or over 2500 mm long and shall be installed as recommended by the manufacturer.

PART 3 EXECUTION

3.1 OMITTED

3.2 INSTALLATION

Installation shall be in accordance with the approved detail drawings and manufacturer's installation instructions. Units shall be level, plumb, secure, and at proper height and location relative to window units. The Contractor shall furnish and install supplementary or miscellaneous items in total, including clips, brackets, or anchorages incidental to or necessary for a sound, secure, and complete installation. Installation shall not be initiated until completion of room painting and finishing operations. Upon completion of the installation, window coverings shall be adjusted for form and appearance, in proper operating condition, and free from damage or blemishes. Damaged units shall be repaired or replaced by the Contractor as directed by the Contracting Officer.

END OF SECTION

This page intentionally blank

****

DEPARTMENT OF THE ARMY
U.S. ARMY CORPS OF ENGINEERS

CEGS-13080 (April 1999)

Superseding
CEGS-13080 (July 1995)

GUIDE SPECIFICATION FOR CONSTRUCTION

****

SECTION 13080

SEISMIC PROTECTION FOR MISCELLANEOUS EQUIPMENT

****

NOTE: The Contractor shall edit this specification as necessary.

NOTE: This guide specification covers the requirements for seismic structural elements for protection of mechanical, electrical and miscellaneous equipment. This guide specification will be used in conjunction with Sections 15070 SEISMIC PROTECTION FOR MECHANICAL EQUIPMENT and 16070 SEISMIC PROTECTION FOR ELECTRICAL EQUIPMENT. This guide specification is to be used in the preparation of project specifications in accordance with ER 1110-1-8155.

Comments and suggestions on this guide specification are welcome and should be directed to the proponent of the specification. A listing of proponents, including their organization designation and telephone number, is at URL http://www.hnd.usace.army.mil/techinfo/index.htm, and an electronic feedback page for submission of recommended changes is available at the same address. Use of electronic communication is encouraged.

****

PART 1 GENERAL

****

NOTE: The intent of this specification is to provide for adequate resistance to lateral forces induced by earthquakes for listed mechanical, electrical and miscellaneous equipment and systems. The design seismic lateral forces are in addition to the "normal" gravity forces (weight) acting on the components of a system.

Seismic protection will no longer be based on the guidance provided in TM 5-809-10 which includes seismic zone, importance factors, and building

categories. Seismic protection design for anchorage and bracing of all equipment will be based on TI 809-04. The designer will ensure that the A-E and/or Contractor has access to TI 809-04.

The designer has 3 options to provide seismic protection for a project:

1) Hire an A-E who will use this section and will submit calculations and drawings stamped by a registered engineer. The Contracting Officer will "accept" the design but the registered engineer (Engineer of Record) will have final responsibility for the adequacy of the structural members and their connections.

2) Issue a contract requiring the Contractor to hire a registered engineer to submit the stamped calculations and drawings in accordance with this section. The contracting Officer will "accept" the design but the registered engineer (Engineer of Record) will have final responsibility for the adequacy of the structural members and their connections.

3) Perform the design in house, in which case the Government designer will have final responsibility for the adequacy of the structural members and their connections.

Regardless of who performs the design, this section, properly edited, must be included in the construction documents to allow the Contractor to install the seismic protection features.

This section can be used for bracing details of medical equipment by editing the specification accordingly.

****

1.1 REFERENCES

****

NOTE: Issue (date) of references included in project specifications need not be more current than provided by the latest change (Notice) to this guide specification.

****

The publications listed below form a part of this specification to the extent referenced. The publications are referred to in the text by basic designation only.

AMERICAN SOCIETY FOR TESTING AND MATERIALS (ASTM)

ASTM A 36/A 36M (1997a) Carbon Structural Steel

ASTM A 53	(1997) Pipe, Steel, Black and Hot-Dipped, Zinc-Coated, Welded and Seamless
ASTM A 153/A 153M	(1998) Zinc Coating (Hot-Dip) on Iron and Steel Hardware
ASTM A 307	(1994) Carbon Steel Bolts and Studs, 60,000 PSI Tensile Strength
ASTM A 325	(1997) Structural Bolts, Steel, Heat Treated, 120/105 ksi Minimum Tensile Strength
ASTM A 325M	(1993) High-Strength Bolts for Structural Steel Joints (Metric)
ASTM A 500	(1996) Cold-Formed Welded and Seamless Carbon Steel Structural Tubing in Rounds and Shapes
ASTM A 563	(1996) Carbon and Alloy Steel Nuts
ASTM A 572/A 572M	(1997) High-Strength Low-Alloy Columbium-Vanadium Structural Steel
ASTM A 603	(1994) Zinc-Coated Steel Structural Wire Rope
ASTM A 653/A 653M	(1997) Steel Sheet, Zinc-Coated (Galvanized) or Zinc-Iron Alloy-Coated (Galvannealed) by the Hot-Dip Process
ASTM E 488	(1996) Strength of Anchors in Concrete and Masonry Elements

ASME INTERNATIONAL(ASME)

ASME B18.2.1	(1996) Square and Hex Bolts and Screws (Inch Series)
ASME B18.2.2	(1987; R 1993) Square and Hex Nuts (Inch Series)

COE TECHNICAL INSTRUCTIONS (TI)

TI 809-04	(1998) Seismic Design for Buildings

1.2 SYSTEM DESCRIPTION

1.2.1 General Requirements

****

NOTE: Designer should verify that specified details do not interfere with the performance of the cathodic protection system (when used) or of the vibration isolation systems.

For systems and equipment in buildings that have a performance objective higher than life-safety, the designer should show a "GA" classification for the

items under SD-04 Drawings in the SUBMITTALS paragraph. This will allow the Engineer of Record (EOR) to: 1)Do a QC review on the anchorage and bracing details of these essential systems, and 2)Asses the impact of the bracing and anchorage details on the structural supporting system of the essential building.

Design done by the Contractor must be in accordance with TI 809-04. Loadings determined using TI 809-04 are based on strength design; therefore, the AISC LRFD specifications should be used to design the steel members in the bracing and anchorage systems.

****

The requirements for seismic protection measures described in this section shall be applied to the mechanical equipment and systems outlined in Section 15070 SEISMIC PROTECTION FOR MECHANICAL EQUIPMENT, the electrical equipment and systems outlined in Section 16070 SEISMIC PROTECTION FOR ELECTRICAL EQUIPMENT, and the miscellaneous equipment and systems listed below. Seismic protection requirements shall be in accordance with TI 809-04 and additional data furnished by the Contracting Officer, and shall be provided in addition to any other requirements called for in other sections of these specifications. The design for seismic protection shall be based on a Seismic Use Group I building occupancy and on site response coefficients for S_{MS} = .40 and S_{M1} = .192. Resistance to lateral forces induced by earthquakes shall be accomplished without consideration of friction resulting from gravity loads. The basic force formulas, for Ground Motions A and B in Chapter 3 of TI 809-04, use the design spectral response acceleration parameters for the performance objective of the building, not for equipment in the building; therefore, corresponding adjustments to the formulas shall be required.

1.2.2 Miscellaneous Equipment and Systems

****

NOTE: The designer must ensure that the list below includes all miscellaneous items to be braced. Delete the items which are not part of the project and add items which are not included in the list. For equipment and systems in buildings with a performance objective greater than life-safety, the designer should provide two separate lists of equipment and systems; 1) Items that are essential to the higher level of post-earthquake performance, and 2) Items that are not essential but are necessary to provide a life-safety level of earthquake protection.

****

The bracing for the following miscellaneous equipment and systems shall be developed by the A-E in accordance with the requirements of this specification:

Storage cabinets	Ornamentations
Storage Racks	Signs and Billboards
Shelving	Furnishings
Partitions	[_____]

1.3 SUBMITTALS

****

NOTE: Submittals must be limited to those necessary for adequate quality control. The importance of an item in the project should be one of the primary factors in determining if a submittal for the item should be required.

Indicate submittal classification in the blank space using "GA" when the submittal requires Government approval or "FIO" when the submittal is for information only.

****

Government approval is required for submittals with a "GA" designation; submittals having an "FIO" designation are for information only. The following shall be submitted in accordance with Section 01330 SUBMITTAL PROCEDURES:

SD-01 Data

Bracing; GA. Equipment Requirements; GA.

Copies of the design calculations with the detail drawings. Calculations shall be stamped by a registered engineer and shall verify the capability of structural members to which bracing is attached for carrying the load from the brace.

SD-04 Drawings

Bracing; GA. Resilient Vibration Isolation Devices; GA. Equipment Requirements; GA.

Detail drawings along with catalog cuts, templates, and erection and installation details, as appropriate, for the items listed. Submittals shall be complete in detail; shall indicate thickness, type, grade, class of metal, and dimensions; and shall show construction details, reinforcement, anchorage, and installation with relation to the building construction. For equipment and systems in buildings that have a performance objective higher than life-safety, the drawings shall be stamped by the registered engineer who stamps the calculations required above.

1.4 EQUIPMENT REQUIREMENTS

1.4.1 Rigidly Mounted Equipment

****

NOTE: Rigidly mounted equipment is defined as having a period of vibration of 0.06 seconds or less for the equipment plus its mounting. Equipment with a fundamental period greater than 0.06 seconds should be assumed to be flexibly mounted or nonrigid. The designer may allow a reduction to the design seismic forces applied to ground-mounted equipment when properly justified in the calculations. List items

that may require additional reinforcements (internally) to prevent permanent deformation, dislocations, separation of components, or other damage, which would render the equipment inoperative for significant periods of time following an earthquake and to meet the specified requirements. Coordinate with note in paragraph BRACING. The A-E shall specify the items to be shown within the brackets.

****

The following specific items of equipment: [_____] to be furnished under this contract shall be constructed and assembled to withstand the seismic forces specified in TI 809-04, Chapter 10. For any rigid equipment which is rigidly attached on both sides of a building expansion joint, flexible joints for piping, electrical conduit, etc., that are capable of accommodating displacements equal to the full width of the joint in both orthogonal directions, shall be provided.

1.4.2 Nonrigid or Flexibly-Mounted Equipment

****

NOTE: The appropriate lateral force coefficient for nonrigid or flexibly-mounted equipment, should be calculated and inserted in the blank space by the A-E.

****

The following specific items of equipment to be furnished: [_____] shall be constructed and assembled to resist a horizontal lateral force of [_____] times the operating weight of the equipment at the vertical center of gravity of the equipment.

PART 2 PRODUCTS

****

NOTE: Appropriate materials for structural supports must be used in corrosive environments. Dissimilar metals must be isolated.

****

2.1 BOLTS AND NUTS

Squarehead and hexhead bolts, and heavy hexagon nuts, ASME B18.2.1, ASME B18.2.2, or [ASTM A 307 for bolts and ASTM A 563 for nuts] [ASTM A 325M ASTM A 325 for bolts and nuts]. Bolts and nuts used underground and/or exposed to weather shall be galvanized in accordance with ASTM A 153/A 153M.

2.2 SWAY BRACING

****

NOTE: Designer should determine an appropriate specification for steel angles used for sway bracing depending on availability of the materials from local suppliers and insert the designation in blank space below.

****

Material used for members listed [in this section] [and] [on the drawings], shall be structural steel conforming with the following:

a. Plates, rods, and rolled shapes, [ASTM A 36/A 36M] [ASTM A 572/A 572M, Grade 503]. If the Contractor does the design, both ASTM A 36/A 36Mand ASTM A 572/A 572M, grade 503 will be allowed.

b. Wire rope, ASTM A 603.

c. Tubes, ASTM A 500, Grade [B] [_____].

d. Pipes, ASTM A 53, Type [E] or [S], Grade B.

e. Light gauge angles, less than 6 mm 1/4 inch thickness, [ASTM A 653/A 653M] [_____].

PART 3 EXECUTION

3.1 BRACING

****

NOTE: Designs must include complete seismic details showing bracing requirements. The design is for the supports of the equipment, not the equipment itself. Bracing does not guarantee that the equipment is rugged enough to survive earthquake shaking. When a piece of equipment is required to remain operational after an earthquake, the manufacturer should be consulted regarding the capabilities of the equipment to withstand seismic loading.

****

Bracing shall conform to the arrangements shown. Trapeze-type hanger shall be secured with not less than two 13 mm 1/2 inch bolts.

3.2 BUILDING DRIFT

****

NOTE: The designer will be guided by the results of the seismic analysis to determine the expected drift of the building; this information is needed for the pipe joint designs required in Section 15070 SEISMIC PROTECTION FOR MECHANICAL EQUIPMENT.

****

Sway braces for a piping run shall not be attached to two dissimilar structural elements of a building that may respond differentially during an earthquake unless a flexible joint is provided.

3.3 ANCHOR BOLTS

3.3.1 Cast-In-Place

****

NOTE: The designer will ensure that foundations and anchor bolts for pad-mounted or floor-mounted equipment are detailed and designed in accordance with TI 809-04. When the designer has the necessary size, weight, and other information for a piece of equipment, the anchorage details including sizes, length and number of bolts, thickness and reinforcing of pads and foundations for that piece of equipment will be shown by the designer on the drawings. When this information is not available, it will be the A-E responsibility to design the support and anchorage for the equipment in accordance with the specified requirements.

If the calculated seismic forces would cause the equipment to uplift, the anchor bolts should be designed for combined shear and tension.

****

Floor or pad mounted equipment shall use cast-in-place anchor bolts, except as specified below. [One nut] [Two nuts] shall be provided on each bolt. Anchor bolts shall conform to ASTM A 307. Anchor bolts shall have an embedded straight length equal to at least 12 times nominal diameter of the bolt. Anchor bolts that exceed the normal depth of equipment foundation piers or pads shall either extend into concrete floor or the foundation shall be increased in depth to accommodate bolt lengths.

3.3.2 Expansion or Chemically Bonded Anchors

****

NOTE: Cast-in-place anchors should be used to anchor equipment for seismic loads since there is considerable experience suggesting that expansion and chemically bonded anchors may come loose during a fire, and do not perform well for vibrating equipment or for other types of cyclic loading, such as earthquakes.

Expansion and chemically bonded anchors should only be allowed when test data show they are applicable for seismic loading. ASTM E 488 provides a means of testing expansion anchors for seismic loading. In lieu of tests, the designer may specify approval of the expansion anchors by a governmental organization such as the City of Los Angeles or the State of California office of Statewide Health Planning and Development (OSHPD).

The edge distance and spacing between anchor bolts greatly affect the shear and tension capacity of the bolts. The spacing will depend on the type of anchor, the diameter, and the length of embedment. The manufacturer should provide data for the minimum edge distance and bolt spacing needed to achieve the rated values and also ways to reduce the allowables if the edge distance or spacing is less than required.

****

Expansion or chemically bonded anchors shall not be used unless test data in accordance with ASTM E 488 has been provided to verify the adequacy of the specific anchor and application. Expansion or chemically bonded anchors shall not be used to resist pull-out in overhead and wall installations if the adhesive is manufactured with temperature sensitive epoxies and the location is accessible to a building fire. Expansion and chemically bonded anchors shall be installed in accordance with the manufacturer's recommendations. The allowable forces shall be adjusted for the spacing between anchor bolts and the distance between the anchor bolt and the nearest edge, as specified by the manufacturer.

3.3.2.1 General Testing

****

NOTE: Expansion and chemically bonded anchors should be tested after installation. Testing every expansion anchor is not necessary or practical; therefore a reasonable rate of testing should be developed depending on the importance of the job. There are two methods of testing: Torque wrench and pullout testing. The torque test is easier and cheaper and usually gives a good indication of installation quality; the pullout test gives a better indication of the strength of both expansion and chemically bonded anchors. The torque test does not apply to expansion bolts which are anchored by hammering the sleeve over a cone such as self drilling anchors. The A-E shall determine the valves required in the brackets.

****

Expansion and chemically bonded anchors shall be tested in place after installation. The tests shall occur not more than [24] [_____] hours after installation of the anchor and shall be conducted by an independent testing agency; testing shall be performed on random anchor bolts as described below.

3.3.2.2 Torque Wrench Testing

****

NOTE: Delete this paragraph for expansion anchors which are not anchored by an applied torque, such as self drilling anchors.

Torque wrench testing verifies that a torqued expansion anchor has seated properly. If it has not seated, the applied torque on the nut will cause the bolt to twist in the hole. Torque wrench testing does not load the bolt up to allowable load and therefore does not verify the capacity of the installed bolt.

****

Torque wrench testing shall be done on not less than [50] [_____] percent of the total installed expansion anchors and at least [one anchor] [[_____]

anchors] for every piece of equipment containing more than [two] [_____] anchors. The test torque shall equal the minimum required installation torque as required by the bolt manufacturer. Torque wrenches shall be calibrated at the beginning of each day the torque tests are performed. Torque wrenches shall be recalibrated for each bolt diameter whenever tests are run on bolts of various diameters. The applied torque shall be between 20 and 100 percent of wrench capacity. The test torque shall be reached within one half turn of the nut, except for 9 mm 3/8 inch sleeve anchors which shall reach their torque by one quarter turn of the nut. If any anchor fails the test, similar anchors not previously tested shall be tested until [20] [_____] consecutive anchors pass. Failed anchors shall be retightened and retested to the specified torque; if the anchor still fails the test it shall be replaced.

3.3.2.3 Pullout Testing

****

NOTE: Pullout testing is expensive and labor intensive because of the apparatus needed to pull on the anchor bolt. Pullout testing determines the tension capacity of the anchor bolt. The amount of load to be applied can vary between 0.5 to 2 times the calculated load, depending on the importance of the bolt. There is not a significant cost difference between testing to 0.5 or 2 times the calculated load; since most anchor bolts have a factor of safety of 4, testing to twice the specified load should not cause any distress. The typical tension failure causes a shear cone to be pulled out of the concrete, the slope of the cone is about a 45 degree angle so there should be nothing on the concrete surface in the vicinity of the bolt to prevent the cone from pulling out. Shear testing is usually not needed unless the bolt is heavily loaded in shear and close to an edge.

****

Expansion and chemically bonded anchors shall be tested by applying a pullout load using a hydraulic ram attached to the anchor bolt. At least [5] [_____] percent of the anchors, but not less than [3] [_____] per day shall be tested. The load shall be applied to the anchor without removing the nut; when that is not possible, the nut shall be removed and a threaded coupler shall be installed of the same tightness as the original nut. The test setup shall be checked to verify that the anchor is not restrained from withdrawing by the baseplate, the test fixture, or any other fixtures. The support for the testing apparatus shall be at least 1.5 times the embedment length away from the bolt being tested. Each tested anchor shall be loaded to [1] [_____] times the design tension value for the anchor. The anchor shall have no observable movement at the test load. If any anchor fails the test, similar anchors not previously tested shall be tested until [20] [_____] consecutive anchors pass. Failed anchors shall be retightened and retested to the specified load; if the anchor still fails the test it shall be replaced.

3.4 RESILIENT VIBRATION ISOLATION DEVICES

Where the need for these devices is determined, based on the magnitude of the design seismic forces, selection of anchor bolts for vibration isolation devices and/or snubbers for equipment base and foundations shall follow the same procedure as in paragraph ANCHOR BOLTS, except that an equipment weight equal to [five] [_____] times the actual equipment weight shall be used.

3.4.1 Resilient and Spring-Type Vibration Devices

****
NOTE: Retain either this paragraph or the one below, as required by the project. Remove the paragraph not needed.
****

Vibration isolation devices shall be selected so that the maximum movement of equipment from the static deflection point shall be 13 mm. 0.5 inches.

3.4.2 Multidirectional Seismic Snubbers

****
NOTE: Details of multidirectional seismic snubbers will be shown in drawings if paragraph is retained.
****

Multidirectional seismic snubbers employing elastomeric pads shall be installed on floor- or slab-mounted equipment. These snubbers shall provide 6 mm 0.25 inches free vertical and horizontal movement from the static deflection point. Snubber medium shall consist of multiple pads of cotton duct and neoprene or other suitable materials arranged around a flanged steel trunnion so both horizontal and vertical forces are resisted by the snubber medium.

3.5 SWAY BRACES FOR PIPING

****
The bracing requirements shown below are based on flexible piping. Supports for flexible piping must consider an additional amplification of the piping being in resonance with the building.
****

Transverse sway bracing for steel and copper pipe shall be provided at intervals not to exceed those shown on the drawings. Transverse sway bracing for pipes of materials other than steel and copper shall be provided at intervals not to exceed the hanger spacing as specified in Section 15400 PLUMBING, GENERAL PURPOSE. Bracing shall consist of at least one vertical angle 50 x 50 mm x 16 gauge 2 x 2 x 16 gauge and one diagonal angle of the same size.

3.5.1 Longitudinal Sway Bracing

Longitudinal sway bracing shall be provided in accordance with Section 15070SEISMIC CONTROL FOR MECHANICAL EQUIPMENT.

3.5.2 Anchor Rods, Angles, and Bars

Anchor rods, angles, and bars shall be bolted to either pipe clamps or pipe flanges at one end and cast-in-place concrete or masonry insert or clip angles bolted to the steel structure on the other end. Rods shall be solid metal or pipe as specified below. Anchor rods, angles, and bars shall not exceed lengths given in the tabulation below.

3.5.3 Maximum Length for Anchor Braces

Type	Size (millimeters)	Maximum Length* (meters)
Angles	38 x 38 x 6	1.5
	50 x 50 x 6	2.0
	64 x 38 x 6	2.5
	75 x 64 x 6	2.5
	75 x 75 x 6	3.0
Rods	91	1.0
	22	1.0
Flat Bars	38 x 6	0.4
	50 x 6	0.4
	50 x 10	0.5
Pipes (40s)	25	2.0
	32	2.8
	40	3.2
	50	4.0

Type	Size (Inches)	Maximum Length* (Feet/Inches)
Angles	1-1/2 x 1-1/2 x 1/4	4-10
	2 x 2 x 1/4	6-6
	2-1/2 x 1-1/2 x 1/4	8-0
	3 x 2-1/2 x 1/4	8-10
	3 x 3 x 1/4	9-10
Rods	3/4	3-1
	7/8	3-8
Flat Bars	1-1/2 x 1/4	1-2
	2 x 1/4	1-2
	2 x 3/8	1-9
Pipes (40S)	1	7-0
	1-1/4	9-0
	1-1/2	10-4
	2	13-1

3.5.4 Bolts

Bolts used for attachment of anchors to pipe and structure shall be not less than 13 mm 1/2 inch diameter.

3.6 EQUIPMENT SWAY BRACING

3.6.1 Suspended Equipment and Light Fixtures

****

NOTE: Equipment weighing more than one-fifth of the dead load of slabs above grade at the equipment level or equipment weighing more than one-tenth of the building weight must be checked by structural analysis to conform with building seismic provisions. Such equipment has a pronounced effect on the response of the building. The following items shall be checked structurally and specific seismic requirements incorporated on appropriate drawings and in the relevant specifications.

Pole or frame supported equipment.

Storage tanks for water and oil.

Storage racks with upper storage level more than 2.4 m (8 feet) in height.

Smoke stacks taller than 15 m (50 feet) in height.

See Chapter 10 of TI 809-04 to compute the force needed to fill in the bracketed blank.

****

Equipment sway bracing shall be provided for items supported from overhead floor or roof structural systems, including light fixtures. Braces shall consist of angles, rods, wire rope, bars, or pipes arranged as shown and secured at both ends with not less than 13 mm 1/2 inch bolts. Sufficient braces shall be provided for equipment to resist a horizontal force equal to [_____] times the weight of equipment without exceeding safe working stress of bracing components. Details of equipment bracing shall be submitted for acceptance. In lieu of bracing with vertical supports, these items may be supported with hangers inclined at 45 degrees directed up and radially away from equipment and oriented symmetrically in 90-degree intervals on the horizontal plane, bisecting the angles of each corner of the equipment, provided that supporting members are properly sized to support operating weight of equipment when hangers are inclined at a 45-degree angle.

3.6.2 Floor or Pad Mounted Equipment

3.6.2.1 Shear Resistance

Floor mounted equipment shall be bolted to the floor. Requirements for the number and installation of bolts to resist shear forces shall be in accordance with paragraph ANCHOR BOLTS.

3.6.2.2 Overturning Resistance

****

NOTE: See Chapter 10 of TI 809-04 for guidance on design of anchor bolts.

****

The ratio of the overturning moment from seismic forces to the resisting moment due to gravity loads shall be used to determine if overturning forces need to be considered in the sizing of anchor bolts. Calculations shall be provided to verify the adequacy of the anchor bolts for combined shear and overturning.

END OF SECTION

SECTION 13110

CATHODIC PROTECTION SYSTEM (SACRIFICIAL ANODE)

PART 1 - GENERAL

1.1 REFERENCES

The publications listed below form a part of this specification to the extent referenced. The publications are referred to in the text by basic designation only.

AMERICAN SOCIETY FOR TESTING AND MATERIALS (ASTM)

ASTM B 418	(1995a) Cast and Wrought Galvanic Zinc Anodes
ASTM B 843	(1996) Magnesium Alloy Anodes for Cathodic Protection
ASTM D 1248	(1984; R 1989) Polyethylene Plastics Molding and Extrusion Materials

CODE OF FEDERAL REGULATIONS (CFR)

40 CFR 280	Technical Standards and Corrective Action Requirements for Owners and Operators of Underground Fuel Storage Tanks (UST)
49 CFR 192	Transportation of Natural and other Gas by Pipeline: Minimum Federal Safety Standards
49 CFR 195	Transportation of Hazardous Liquids by Pipeline

NACE INTERNATIONAL (NACE)

NACE RP0169	(1996) Control of External Corrosion on Underground or Submerged Metallic Piping Systems
NACE RP0177	(1995) Mitigation of Alternating Current and Lightning Effects on Metallic Piping Systems
NACE RP0188	(1990) Discontinuity (Holiday) Testing of Protective Coatings
NACE RP0190	(1995) External Protective Coatings for Joints, Fittings, and Valves on Metallic Underground or Submerged Pipelines and Piping Systems

NACE RP0193	(1993) External Cathodic Protection of On-Grade Metallic Storage Tank Bottoms
NACE RP0285	(1995) Corrosion Control of Underground Storage Tank Systems by Cathodic Protection

NATIONAL ELECTRICAL MANUFACTURERS ASSOCIATION (NEMA)

NEMA TC 2	(1990) Electrical Polyvinyl Chloride (PVC) Tubing (EPT) and Conduit (EPC-40 and EPC-80)
NEMA WC 5	(1992; Rev 1) Thermoplastic-Insulated Wire and Cable for the Transmission and Distribution of Electrical Energy

NATIONAL FIRE PROTECTION ASSOCIATION (NFPA)

NFPA 70	(1999) National Electrical Code

UNDERWRITERS LABORATORIES (UL)

UL 6	(1997) Rigid Metal Conduit
UL 510	(1994; Rev thru Nov 1997) Polyvinyl Chloride, Polyethylene, and Rubber Insulating Tape
UL 514A	(1996; Rev Jul 1998) Metallic Outlet Boxes

1.2 GENERAL REQUIREMENTS

The Contractor shall furnish and install a complete, operating, sacrificial anode cathodic protection system in complete compliance with NFPA 70, with all applicable Federal, State, and local regulations and with minimum requirements of this contract. The services required include planning, installation, adjusting and testing of a cathodic protection system, using sacrificial anodes for cathodic protection of the fire hydrant piping. The cathodic protection system shall include anodes, cables, connectors, corrosion protection test stations, and any other equipment required for a complete operating system providing the NACE criteria of protection as specified. The new 12" diameter steel casing for the HTW pipelines is to be cathodically protected by the impressed current systems used for the existing HTW piping. Adjustments to Rectifier E (Bldg. 1082), Rectifier C (Bldg. 666), and Rectifier B (Bldg. 635) will be required to meet NACE criteria.

1.2.1 Services of "Corrosion Expert"

The Contractor shall obtain the services of a "corrosion expert" to supervise, inspect, and test the installation and performance of the cathodic protection system. "Corrosion expert" refers to a person, who by thorough knowledge of the physical sciences and the principles of engineering and mathematics, acquired by professional education and related practical experience, is qualified to engage in the practice of corrosion control of buried or submerged metallic surfaces. Such a person must be accredited or certified by the National Association of Corrosion Engineers (NACE) as a NACE Accredited Corrosion Specialist or a NACE certified Cathodic Protection (CP) Specialist or be a registered professional engineer who has certification or licensing that includes education and experience in corrosion control of buried or submerged metallic piping and tank systems, if such certification or licensing includes 5 years experience in corrosion control on underground metallic surfaces of the type under this contract. The "corrosion expert" shall make at least 2 visits to the project site. Once the submittals are approved and the materials delivered, the "corrosion expert" shall visit the site to ensure the Contractor understands installation practices and laying out the components. The second visit shall involve testing the installed cathodic protection systems and training applicable personnel on proper maintenance techniques. The "corrosion expert" shall supervise installation and testing of all cathodic protection.

1.2.2 Contractor's Modifications

The specified system is based on a complete system with magnesium sacrificial anodes. The Contractor may modify the cathodic protection system after review of the project, site verification, and analysis, if the proposed modifications include the anodes specified and will provide better overall system performance. The modifications shall be fully described, shall be approved by the Contracting Officer's representative, and shall meet the following criteria. The proposed system shall achieve a minimum pipe-to-soil "instant off" potential of minus 850 millivolts with reference to a saturated copper-copper sulfate reference cell on the underground components of the piping or other metallic surface. The Contractor shall take resistivity measurements of the soil in the vicinity of the pipes and ground bed sites. Based upon the measurements taken, the current and voltage shall be required to produce a minimum of minus 850 millivolts "instant off" potential between the structure being tested and the reference cell. This potential shall be obtained over 95 percent of the metallic area. The anode system shall be designed for a life of twenty-five (25)

1.2.3 Isolators

Isolation flange kits and casing sleeves are required to prevent electrical contact of the steel casing and HTW piping to any metallic structures along its route and where it enters the Dormitory Building.

No isolation where the new HTW piping/casing contacts the existing HTW system is required.

1.2.4 Anode and Bond Wires

Magnesium anodes with an unpackaged weight of 9.0 kilograms shall be provided along the metallic pipe lines. Test stations shall be used for these anodes. For each cathodic system, the metallic components and structures to be protected shall be made electrically continuous. The electrical isolation of underground facilities in accordance with acceptable industry practice shall be included under this section. All tests shall be witnessed by the Contracting Officer.

1.2.5 Surge Protection

Approved zinc grounding cells or sealed weatherproof lightning arrestor devices shall be installed across insulated flanges or fittings installed in underground piping as indicated on the drawings. The arrestor shall be gapless, self-healing, solid state type. Zinc anode composition shall conform to ASTM B 418, Type II. Lead wires shall be number 6 AWG copper with high molecular weight polyethylene (HMWPE) insulation. The zinc grounding cells shall not be prepackaged in backfill but shall be installed as detailed on the drawings. Lightning arrestors or zinc grounding cells are not required for insulated flanges on metallic components used on nonmetallic piping systems.

1.2.6 Summary of Services Required

The scope of services shall include, but shall not be limited to, the following:

a. Close-interval potential surveys.
b. Cathodic Protection Systems.
c. System testing.
d. Casing corrosion control.
e. Interference testing.
f. Training.
g. Operating and maintenance manual.
h. Insulator testing.
i. Coating and holiday testing shall be submitted within 45 days of notice to proceed.

1.2.7 Nonmetallic Pipe System

In the event pipe other than metallic pipe is approved and used in lieu of metallic pipe, all metallic components of this pipe system shall be protected with cathodic protection. Detailed drawings of cathodic protection for each component shall be submitted to the Contracting Officer for approval within 45 days after date of receipt of notice to proceed, and before commencement of any work.

1.2.7.1 Coatings

Coatings for metallic components shall be as required for metallic fittings. Protective covering (coating and taping) shall be completed and tested on each metallic component (such as valves, hydrants and fillings). This covering shall be as required for underground metallic pipe. Each test shall be witnessed by the Contracting Officer. Coatings shall be selected, applied, and inspected in accordance with NACE RP0190 and as specified in these specifications. The use of nonmetallic pipe does not change other requirements of the specifications. Any deviations due to the use of nonmetallic pipe shall be submitted for approval.

1.2.7.2 Tracer Wire

When a nonmetallic pipe line is used to extend or add to an existing metallic line, an insulated No. 8 AWG copper wire shall be thermit-welded to the existing metallic line and run the length of the

new nonmetallic line. This wire shall be used as a locator tracer wire and to maintain continuity to any future extensions of the pipe line.

1.2.8 Tests of Components

A minimum of four (4) tests shall be made at each metallic component in the piping system. Two (2) measurements shall be made directly over the anodes and the other two (2) tests shall be over the outer edge of the component, but at the farthest point from the anodes. Structure and pipes shall be shown with the cathodic protection equipment. All components of the cathodic protection system shall be shown on drawings, showing their relationship to the protected structure or component. A narrative shall describe how the cathodic protection system will work and provide testing at each component. Components requiring cathodic protection shall include but not be limited to the following:

a. Pipes under the floor slab or foundations.

b. PIV.

c. Shutoff valves.

d. Metallic pipe extended from aboveground locations.

e. Each connector or change-of-direction device.

f. Any metallic pipe component or section.

g. Backflow preventor.

h. Culvert.

1.2.9 Drawings

Detailed drawings shall be provided showing location of anodes, insulated fittings, test stations, permanent reference cells, and bonding. Locations shall be referenced to two (2) permanent facilities or mark points.

1.2.10 Electrical Potential Measurements

All potential tests shall be made at a minimum of 3 meter 10 foot intervals witnessed by the Contracting Officer. Submittals shall identify test locations on separate drawing, showing all metal to be protected and all cathodic protection equipment. Test points equipment and protected metal shall be easily distinguished and identified.

1.2.11 Achievement of Criteria for Protection

All conductors, unless otherwise shown, shall be routed to or through the test stations. Each system provided shall achieve a minimum pipe-to-soil "instant off" potential of minus 850 millivolt potentials with reference to a saturated copper-copper-sulfate reference cell on all underground

components of the piping. Based upon the measurements taken, the current and voltage of the anodes should be adjusted as required to produce a minimum of minus 850 millivolts "instant off" potential between the structure being tested and the reference cell. This potential should be obtained over 95 percent of the metallic area. This must be achieved without the "instant off" potential exceeding 1150 millivolts. Testing will be witnessed by the Contracting Officer. Additional anodes shall be provided by the Contractor if required to achieve the minus 850 millivolts "instant off". Although acceptance criteria of the cathodic protection systems are defined in NACE RP0169, for this project the "instant off" potential of minus 850 millivolts is the only acceptable criteria.

1.2.12 Metallic Components and Typicals

a. Metallic components: As a minimum, each metallic component shall be protected with two 2 magnesium anodes. This number of anodes is required to achieve minus 850 millivolts "instant off" potential on the metallic area and at the same time not provide overvoltage above 1150 millivolts "instant off." As a minimum, the magnesium anode unpackaged weight shall be 7.7 kilograms 17 pounds. The magnesium anodes shall be located on each side of the metallic component and routed through a test station.

b. Fire Hydrants: Fire hydrant pipe components shall have a minimum of two 2 anodes. These magnesium anodes shall have an unpackaged weight of 7.7 kilograms 17 pounds.

c. Pipe Under Concrete Slab: Pipe under concrete slab shall have a minimum of 2 magnesium anodes. These magnesium anodes shall have an unpackaged weight of 7.7 kilograms 17 pounds. Pipe under concrete slab shall have 1 permanent reference electrodes located under the slab. One 1 permanent reference electrode shall be located where the pipe enters the concrete slab. All conductors shall be routed to a test station.

d. Valves: Each valve shall be protected with 1 magnesium anodes. The magnesium anode shall have an unpackaged weight of 7.7 kilograms 17 pounds.

e. Metallic Pipe Component or Section: Each section of metallic pipe shall be protected with 2 magnesium anodes. The magnesium anodes shall have an unpackaged weight of 7.7 kilograms 17 pounds.

f. Connectors or Change-of-Direction Devices: Each change-of-direction device shall be protected with 2 magnesium anodes. The magnesium anode shall have an unpackaged weight of 7.7 kilograms 17 pounds.

1.2.13 Metallic Component Coating

Coatings for metallic components shall be as required for metallic fittings as indicated. This will include fire hydrants, T's, elbows, valves, etc. Coatings shall be selected, applied, and inspected in accordance with NACE RP0190 and as specified in these specifications.

1.3 SUBMITTALS

Government approval is required for submittals with a "GA" designation; submittals having an "FIO" designation are for information only. The following shall be submitted in accordance with Section 01330 SUBMITTAL PROCEDURES:

SD-01 Data

Materials and Equipment; GA.

Within 30 days after receipt of notice to proceed, an itemized list of equipment and materials including item number, quantity, and manufacturer of each item. The list shall be accompanied by a description of procedures for each type of testing and adjustments, including testing of coating for thickness and holidays. Installation of materials and equipment shall not commence until this submittal is approved.

Spare Parts; GA

Spare parts data for each different item of material and equipment specified, after approval of detail drawings and not later than six 6 months prior to the date of beneficial occupancy. The data shall include a complete list of parts, special tools, and supplies, with current unit prices and source of supply. One 1 spare anode of each type shall be furnished.

SD-04 Drawings

Cathodic Protection System; GA.

Six copies of detail drawings consisting of a complete list of equipment and material including manufacturer's descriptive and technical literature, catalog cuts, results of system design calculations including soil-resistivity, installation instructions and certified test data stating the maximum recommended anode current output density and the rate of gaseous production if any at that current density. Detail drawings shall contain complete wiring and schematic diagrams and any other details required to demonstrate that the system has been coordinated and will function properly as a unit.

Contractor's Modifications; GA.

Six copies of detail drawings showing proposed changes in location, scope of performance indicating any variations from, additions to, or clarifications of contract drawings. The drawings shall show proposed changes in anode arrangement, anode size and number, anode materials and layout details, conduit size, wire size, mounting details, wiring diagram, method for electrically-isolating each pipe, and any other pertinent information to proper installation and performance of the system.

SD-08 Statements

Services of "Corrosion Expert"; GA.

Evidence of qualifications of the "corrosion expert."

a. The "corrosion expert's" name and qualifications shall be certified in writing to the Contracting Officer prior to the start of construction.

b. Certification shall be submitted giving the name of the firm, the number of years of experience, and a list of not less than five (5) of the firm's installations three (3) or more years old that have been tested and found satisfactory.

SD-09 Reports

Tests and Measurements.

Test reports in booklet form tabulating all field tests and measurements performed, upon completion and testing of the installed system and including close interval potential survey, casing and interference tests, final system test verifying protection, insulated joint and bond tests, and holiday coating test. A certified test report showing that the connecting method has passed a 120-day laboratory test without failure at the place of connection, wherein the anode is subjected to maximum recommended current output while immersed in a three percent sodium chloride solution.

Contractor's Modifications; GA.

Final report regarding Contractor's modifications. The report shall include pipe-to-soil measurements throughout the affected area, indicating that the modifications improved the overall conditions, and current measurements for anodes. The following special materials and information are required: taping materials and conductors; zinc grounding cell, installation and testing procedures, and equipment; coating material; system design calculations for anode number, life, and parameters to achieve protective potential; backfill shield material and installation details showing waterproofing; bonding and waterproofing details; insulated resistance wire; exothermic weld equipment and material.

SD-13 Certificates

Cathodic Protection System.

Proof that the materials and equipment furnished under this section conform to the specified requirements contained in the referenced standards or publications. The label or listing by the specified agency will be acceptable evidence of such compliance.

SD-18 Records

Training Course.

The proposed Training Course Curriculum (including topics and dates of discussion) indicating that all of the items contained in the operating and maintenance instructions, as well as demonstrations of routine maintenance operations, including testing procedures included in the maintenance instructions, are to be covered.

SD-19 Operation and Maintenance Manuals

Cathodic Protection System.

Before final acceptance of the cathodic protection system, six copies of operating manuals outlining the step-by-step procedures required for system startup, operation, adjustment of current flow, and shutdown. The manuals shall include the manufacturer's name, model number, service manual, parts list, and brief description of all equipment and their basic operating features. Six copies of maintenance manual, listing routine maintenance procedures, recommendation for maintenance testing, possible breakdowns and repairs, and troubleshooting guides. The manuals shall include single-line diagrams for the system as installed; instructions in making pipe-to-reference cell and tank-to-reference cell potential measurements and frequency of monitoring; instructions for dielectric connections, interference and sacrificial anode bonds; instructions shall include precautions to ensure safe conditions during repair of pipe or other metallic systems. The instructions shall be neatly bound between permanent covers and titled "Operating and Maintenance Instructions." These instructions shall be submitted for the Contracting Officer's approval. The instructions shall include the following:

a. As-built drawings, to scale of the entire system, showing the locations of the piping, location of all anodes and test stations, locations of all insulating joints, and structure-to-reference cell potentials as measured during the tests required by Paragraph: TESTS AND MEASUREMENTS, of this section.

b. Recommendations for maintenance testing, including instructions in making pipe-to-reference cell potential measurements and frequency of testing.

c. All maintenance and operating instructions and nameplate data shall be in English.

d. Instructions shall include precautions to insure safe conditions during repair of pipe system.

PART 2 - PRODUCTS

2.1 MAGNESIUM ANODES

Magnesium anodes shall be installed on the pipe system.

2.1.1 Anode Composition

Anodes shall be of high-potential magnesium alloy, made of primary magnesium obtained from sea water or brine, and not made from scrap metal. Magnesium anodes shall conform to ASTM B 843 and to the following analysis (in percents) otherwise indicated:

Aluminum, max.	0.010
Manganese, max.	0.50 to 1.30

Zinc	0.05
Silicon, max.	0.05
Copper, max.	0.02
Nickel, max.	0.001
Iron, Max.	0.03
Other impurities, max.	0.05 each or 0.3 max. total
Magnesium	Remainder

The Contractor shall furnish spectrographic analysis on samples from each heat or batch of anodes used on this project.

2.1.2 Dimensions and Weights

Dimensions and weights of anodes shall be approximately as follows:

TYPICAL MAGNESIUM ANODE SIZE
(Cross sections to be D shaped)

NOMINAL WT. kg.	APPROX. SIZE (mm)	NOMINAL GROSS WT kg PACKAGED IN BACKFILL	NOMINAL PACKAGE DIMENSIONS (mm)
9.0	63.5 x 63.5 x 1524	32	152 Ø x 1626 L

2.1.3 Packaged Anodes

Anodes shall be provided in packaged form with the anode surrounded by specially-prepared quick-wetting backfill and contained in a water permeable cloth or paper sack. The backfill material shall have the following composition, unless otherwise indicated:

Material	Approximate Percent by Weight
Gypsum	75
Bentonite	20
Sodium Sulphate	5
Total	100

2.1.4 Zinc Anodes

Zinc anodes shall conform to ASTM B 418, Type II.

2.1.5 Connecting Wire

2.1.5.1 Wire Requirements

Wire shall be No. 10 AWG stranded copper wire, not less than 3 meters long, unspliced, complying with NEMA WC5 type HMW/PE insulation. Connecting wires for magnesium anodes shall be factory installed with the place or emergence from the anode in a cavity sealed flush with a dielectric sealing compound.

2.1.5.2 Anode Header Cable

Cable for anode header and distribution shall be No. 10 AWG stranded copper wire with type CP high molecular weight polyethylene, 2.8 mm 7/64 inch thick insulation, 600-volt rating, in accordance with NEMA WC 5.

2.2 MISCELLANEOUS MATERIALS

2.2.1.1 Wire Splicing

Connecting wire splicing shall be made with copper compression connectors following instructions of the manufacturer. Single split-bolt connections shall not be used. Sheaths for encapsulating electrical wire splices to be buried underground shall fit the insulated wires entering the spliced joints and epoxy potting compound shall be as specified below.

2.2.1.2 Test Wires

Test wires shall be AWG No. 12 stranded copper wire with NFPA 70, Type TW or RHW or polyethylene insulation.

2.2.1.3 Resistance Wire

Resistance wire shall be AWG No. 16 or No. 22 nickel-chromium wire.

2.2.2 Conduit

Rigid galvanized steel conduit and accessories shall conform to UL 6. Non metallic conduit shall conform to NEMA TC 2.

2.2.3 Test Boxes and Junctions Boxes

Boxes shall be outdoor type conforming to UL 514A.

2.2.4 Joint, Patch, Seal, and Repair Coating

Sealing and dielectric compound shall be a black, rubber based compound that is soft, permanently pliable, tacky, moldable, and unbacked. Compound shall be applied as recommended by the manufacturer, but not less than 13 mm1/2-inch thick. Coating compound shall be hot-applied coal-tar enamel. Pressure-sensitive vinyl plastic electrical tape shall conform to UL 510.

2.2.5 Backfill Shields

Shields shall consist of approved pipeline wrapping or fiberglass-reinforced, coal-tar impregnated tape, or plastic weld caps, specifically made for the purpose and installed in accordance with the manufacturer's recommendations. When joint bonds are required, due to the use of mechanical joints, the entire joint shall be protected by the use of a kraft paper joint cover. The joint cover shall be filled with poured-in, hot coat-tar enamel.

2.2.6 Epoxy Potting Compound

Compound for encapsulating electrical wire splices to be buried underground shall be a two package system made for the purpose.

2.2.7 Test Stations

Stations shall be of flush-curb-box type and shall be the standard product of a recognized manufacturer. Test stations shall be complete with an insulated terminal block having the required number of terminals. The test station shall be provided with a lockable over and shall have an embossed legend, "C.P. Test."

2.2.8 Joint and Continuity Bonds

Bonds shall be provided across all joints in the metallic lines, across any electrically discontinuous connections and all other pipes and structures with other than welded or threaded joints that are included in this cathodic protection system. Unless otherwise specified in the specifications, bonds between structures and across joints in pipe with other than welded or threaded joints shall be No. 8 AWG stranded copper cable with polyethylene insulation. Bonds between structures shall contain sufficient slack for any anticipated movement between structures. Bonds across pipe joints shall contain a minimum of 102 mm 4 inches of slack to allow for pipe movement and soil stress. Bonds shall be attached by exothermic welding. Exothermic weld areas shall be insulated with coating compound and approved, and witnessed by the Contracting Officer. Continuity bonds shall be installed as necessary to reduce stray current interference. Additional joint bondings shall be accomplished by the Contractor where the necessity is discovered during construction or testing or where the Contracting Officer's representative directs that such bonding be done. Joint bonding shall include all associated excavation and backfilling. There shall be a minimum of two (2) continuity bonds between each structure and other than welded or threaded joints. The Contractor shall test for electrical continuity across all joints with other than welded or threaded joints and across all metallic portions or components. The Contractor shall provide bonding as required and as specified above until electrical continuity is achieved. Bonding test data shall be submitted for approval.

2.2.9 Resistance Bonds

Resistance bonds should be adjusted as outlined in this specification. Alternate methods may be used if they are approved by the Contracting Officer.

2.2.10 Stray Current Measurements

Stray current measurements should be performed at each test station. Stray currents resulting from lightning or overhead alternating current (AC) power transmission systems shall be mitigated in accordance with NACE RP0177.

2.2.11 Electrical Isolation of Structures

As a minimum, isolating flanges or unions shall be provided at the following locations:

a. Connection of new metallic piping or components to existing piping.

b. Pressure piping under floor slab to a building.

Flange kit shall meet a temperature range of 380F to –30F and a pressure of 325 psi. A linebacker G3 Teflon gasket, G3 washers (double) and Nomax sleeves, as manufactured by Pacific Seal & Insulator, Houston, TX, or equal is acceptable.

2.2.11.1 Electrically Isolating Pipe Joints

Electrically isolating pipe joints shall be of a type that is in regular factory production.

2.2.11.2 Electrically Conductive Couplings

Electrically conductive couplings shall be of a type that has a published maximum electrical resistance rating given in the manufacturer's literature. Cradles and seals shall be of a type that is in regular factory production made for the purpose of electrically insulating the carrier pipe from the casing and preventing the incursion of water into the annular space.

2.2.11.3 Insulating Joint Testing

A Model 601 Insulation Checker, as manufactured by Gas Electronics, or an approved equal, shall be used for insulating joint electrical testing.

2.2.12 Omitted

2.2.13 Resistance Wire

Wire shall be No. 16 or No. 22 nickel-chromium wire with TW insulation.

2.2.14 Electrical Connections

Electrical connections shall be done as follows:

a. Exothermic welds shall be Thermoweld. Use of this material shall be in strict accordance with the manufacturer's recommendations.

b. Electrical-shielded arc welds shall be approved for use on steel pipe by shop drawing submittal action.

c. Brazing shall be as specified in Paragraph: Lead Wire Connections.

2.2.15 Electrical Tape

Pressure-sensitive vinyl plastic electrical tape shall conform to UL 510.

2.2.16 Permanent Reference Electrodes

Permanent reference electrodes shall be Cu-CuS04 electrodes suitable for direct burial. Electrodes shall be guaranteed by the supplier for 15 years' service in the environment in which they shall be placed. Electrodes shall be installed directly beneath pipe, or metallic component.

2.2.17 Casing

Where a pipeline is installed in a casing under a roadway or railway, the pipeline shall be electrically insulated from the casing, and the annular space sealed and filled with an approved corrosion inhibiting product against incursion of water.

PART 3 - EXECUTION

3.1 CRITERIA OF PROTECTION

Acceptance criteria for determining the adequacy of protection on a buried underground pipe shall be in accordance with NACE RP0169 and as specified below.

3.1.1 Iron and Steel

The following method (a) shall be used for testing cathodic protection voltages. If more than one method is required, method (b) shall be used.

a. A negative voltage of at least -850 millivolts as measured between the underground component and a CSE reference connecting the earth (electrolyte) directly over the underground component. Determination of this voltage shall be made with the cathodic protection system in operation. Voltage drops shall be considered for valid interpretation of this voltage measurement. A minimum of -850 millivolt potential between the underground component being tested and the reference cell shall be achieved over 95 percent of the area of the structure. Adequate number of measurements shall be obtained over the pipelines to verify and record achievement of -850 millivolts.

b. A minimum polarization voltage shift of 100 millivolts as measured between the underground component and a saturated CSE reference contacting the earth directly over the underground component. This polarization voltage shift shall be determined by interrupting the protective current and measuring the polarization decay. When the protective current is interrupted, an immediate voltage shift will occur. The voltage reading, after the immediate shift, shall be used as the base reading from which to measure polarization decay.

Measurements achieving 100 millivolts decay shall be made over 95 percent of the metallic surface being protected.

c. For any metallic component, a minimum of four (4) measurements shall be made using subparagraph (a), above, and achieving the "instant off" potential of minus 850 millivolts. Two (2) measurements shall be made over the anodes and two (2) measurements shall be made at different locations near the component and farthest away from the anode.

3.1.2 Aluminum

Aluminum underground component shall not be protected to a potential more negative than minus 1200 millivolts, measured between the underground component and a saturated copper-copper sulphate reference electrode contacting the earth, directly over the metallic component. Resistance, if required, shall be inserted in the anode circuit within the test station to reduce the potential of the aluminum to a value which will not exceed a potential more negative than minus 1200 millivolts. Voltage shift criterion shall be a minimum negative polarization shift of 100 millivolts measured between the metallic component and a saturated copper-copper sulphate reference electrode contacting the earth, directly over the metallic component. The polarization voltage shift shall be determined as outlined for iron and steel.

3.1.3 Copper Piping

For copper piping, the following criteria shall apply: A minimum of 100 millivolts of cathodic polarization between the structure surface and a stable reference electrode contacting the electrolyte. The polarization voltage shift shall be determined as outlined for iron and steel.

3.2 ANODE STORAGE AND INSTALLATION

3.2.1 Anode Storage

Storage area for magnesium anodes will be designated by the Contracting Officer. If anodes are not stored in a building, tarps or similar protection should be used to protect anodes from inclement weather. Packaged anodes, damaged as a result of improper handling or being exposed to rain, shall be resacked by the Contractor and the required backfill added.

3.2.2 Anode Installation

Unless otherwise authorized, installation shall not proceed without the presence of the Contracting Officer. Anodes of the size specified shall be installed to the depth indicated and at the locations shown. Locations may be changed to clear obstructions with the approval of the Contracting Officer. Anodes shall be installed in sufficient number and of the required type, size, and spacing to obtain a uniform current distribution over the surface of the structure. Anodes shall be installed as indicated in a dry condition after any plastic or waterproof protective covering has been completely removed from the water permeable, permanent container housing the anode metal. The anode connecting wire shall not be used for lowering the anode into the hole. The annular space around the anode shall be backfilled with fine earth in 150 mm layers and each layer shall be hand tamped. Care must be exercised not to strike the anode or connecting wire with the tamper. Approximately 20 liters of water shall be applied to each filled hole after anode

backfilling and tamping has been completed to a point about 150 mm above the anode. After the water has been absorbed by the earth, backfilling shall be completed to the ground surface level.

3.2.2.1 Single Anodes

Single anodes, spaced as shown, shall be [connected] [connected through a test station] to the pipeline, allowing adequate slack in the connecting wire to compensate for movement during backfill operation.

3.2.2.2 Groups of Anodes

Groups of anodes, in quantity and location shown, shall be connected to an anode header cable. The anode header cable shall make contact with the structure to be protected only through a test station. Anode lead connection to the anode header cable shall be made by an approved crimp connector and splice mold kit with appropriate potting compound.

3.2.2.3 Welding Methods

Connections to ferrous pipe shall be made by exothermic weld methods manufactured for the type of pipe supplied. Electric arc welded connections and other types of welded connections to ferrous pipe and structures shall be approved before use.

3.2.3 Anode Placement - General

Packaged anodes shall be installed completely dry, and shall be lowered into holes by rope sling or by grasping the cloth gather. The anode lead wire shall not be used in lowering the anodes. The hole shall be backfilled with fine soil in 150 mm layers and each layer shall be hand-tamped around the anode. Care must be exercised not to strike the anode or lead wire with the tamper. If immediate testing is to be performed, water shall be added only after backfilling and tamping has been completed to a point 150 mm 6 inches above the anode. Approximately 8 liters of water may be poured into the hole. After the water has been absorbed by the soil, backfilling and tamping may be completed to the top of the hole. Anodes shall be installed as specified or shown. In the event a rock strata is encountered prior to achieving specified augered-hole depth, anodes may be installed horizontally to a depth at least as deep as the bottom of the pipe, with the approval of the Contracting Officer.

3.2.4 Underground Pipeline

Anodes shall be installed at a minimum of 2.5 meters 8 feet and a maximum of3 meters 10 feet from the line to be protected.

3.2.5 Installation Details

Details shall conform to the requirements of this specification. Details shown on the drawings are indicative of the general type of material required, and are not intended to restrict selection to material of any particular manufacturer.

3.2.6 Lead Wire Connections

3.2.6.1 Underground Pipeline (Metallic)

To facilitate periodic electrical measurements during the life of the sacrificial anode system and to reduce the output current of the anodes, if required, all anode lead wires shall be connected to a test station and buried a minimum of 610 mm 24 inches in depth. The cable shall be No. 10 AWG, stranded copper, polyethylene or RHW-USE insulated cable. The cable shall make contact with the structure only through a test station. Resistance wire shall be installed between the cable and the pipe cable, in the test station, to reduce the current output, if required. Anode connections, except in the test station, shall be made with exothermic welding process, and shall be insulated by means of at least three (3) layers of electrical tape; and all lead wire connections shall be installed in a moistureproof splice mold kit and filled with epoxy resin. Lead wire-to-structure connections shall be accomplished by an exothermic welding process. All welds shall be in accordance with the manufacturer's recommendations. A backfill shield filled with a pipeline mastic sealant or material compatible with the coating shall be placed over the weld connection and shall be of such diameter as to cover the exposed metal adequately.

3.2.6.2 Resistance Wire Splices

Resistance wire connections shall be accomplished with silver solder and the solder joints wrapped with a minimum of three (3) layers of pressure-sensitive tape. Lead wire connections shall be installed in a moistureproof splice mold kit and filled with epoxy resin.

3.2.7 Location of Test Stations

Test stations shall be of the type and location shown and shall be curb box mounted. Buried insulating joints shall be provided with test wire connections brought to a test station. Unless otherwise shown, other test stations shall be located as follows:

a. At 300 m 1,000-foot intervals or less.

b. Where the pipe or conduit crosses any other metal pipe.

c. At both ends of casings under roadways and railways.

d. Where both sides of an insulating joint are not accessible above ground for testing purposes.

3.3 ELECTRICAL ISOLATION OF STRUCTURES

3.3.1 Isolation Joints and Fittings

Isolating fittings, including main line isolating flanges and couplings, shall be installed aboveground, or within manholes, wherever possible. Where isolating joints must be covered with soil, they shall be fitted with a paper joint cover specifically manufactured for covering the particular joint, and the space within the cover filled with hot coal-tar enamel. Isolating fittings in lines entering buildings shall be located at least 305 mm 12 inches above grade of floor level, when possible.

Isolating joints shall be provided with grounding cells to protect against over-voltage surges or approved surge protection devices. The cells shall provide a low resistance across isolating joint without excessive loss of cathodic current.

3.3.2 Gas Distribution Piping

Electrical isolation shall be provided at each building riser pipe to the pressure regulator, at all points where a short to another structure or to a foreign structure may occur, and at other locations as indicated on the drawings.

3.4 TRENCHING AND BACKFILLING

Trenching and backfilling shall be in accordance with Section 02316 EXCAVATION, TRENCHING, AND BACKFILLING FOR UTILITY SYSTEMS.

3.5 TESTS AND MEASUREMENTS

3.5.1 Baseline Potentials

Each test and measurement will be witnessed by the Contracting Officer. The Contractor shall notify the Contracting Officer a minimum of five (5) working days prior to each test. After backfill of the pipe, the static potential-to-soil of the pipe shall be measured. The locations of these measurements shall be identical to the locations specified for pipe-to-reference electrode potential measurements. The initial measurements shall be recorded.

3.5.2 Isolation Testing

Before the anode system is connected to the pipe, an isolation test shall be made at each isolating joint or fitting. This test shall demonstrate that no metallic contact, or short circuit exists between the two isolated sections of the pipe. Any isolating fittings installed and found to be defective shall be reported to the Contracting Officer.

3.5.2.1 Insulation Checker

A Model 601 insulation checker, as manufactured by Gas Electronics, or an approved equal, using the continuity check circuit, shall be used for isolating joint (flange) electrical testing. Testing shall conform to the manufacturer's operating instructions. Test shall be witnessed by the Contracting Officer. An isolating joint that is good will read full scale on the meter. If an isolating joint is shorted, the meter pointer will be deflected or near zero on the meter scale. Location of the fault shall be determined from the instructions, and the joint shall be repaired. If an isolating joint is located inside a vault, the pipe shall be sleeved with insulator when entering and leaving the vault.

3.5.2.2 Cathodic Protection Meter

A Model B3A2 cathodic protection meter, as manufactured by M.C. Miller, or an approved equal, using the continuity check circuit, shall be used for isolating joint electrical testing. This test shall be performed in addition to the Model 601 insulation checker. Continuity is checked across the

isolation joint after the test lead wire is shorted together and the meter adjusted to scale. A full-scale deflection indicates the system is shorted at some location. The Model 601 verifies that the particular insulation under test is good and the Model B3A2 verifies that the system is isolated. If the system is shorted, further testing shall be performed to isolate the location of the short.

3.5.3 Anode Output

As the anodes or groups of anodes are connected to the pipe, current output shall be measured with an approved clamp-on milliammeter, calibrated shunt with a suitable millivoltmeter or multimeter, or a low resistance ammeter. (Of the three methods, the low-resistance ammeter is the least desirable and most inaccurate. The clamp-on milliammeter is the most accurate.) The valves obtained and the date, time, and location shall be recorded.

3.5.4 Reference Electrode Potential Measurements

Upon completion of the installation and with the entire cathodic protection system in operation, electrode potential measurements shall be made using a CSE reference and a direct-current voltmeter having an internal resistance (sensitivity) of not less than 10 megohms per volt and a full scale of 10 volts. The locations of these measurements shall be identical to the locations used for baseline potentials. The values obtained and the date, time, and locations of measurements shall be recorded. Additional measurements shall be made at each distribution service riser, with the reference electrode placed directly over the service line.

3.5.5 Location of Measurements

3.5.5.1 Piping or Conduit

For coated piping or conduit, measurements shall be taken from the reference electrode located in contact with the earth, directly over the pipe. Connection to the pipe shall be made at service risers, valves, test leads, or by other means suitable for test purposes. Pipe-to-soil potential measurements shall be made at intervals not exceeding 3 meters 10 feet. The Contractor may use a continuous pipe-to-soil potential profile in lieu of 1.5 meter 5 foot interval pipe-to-soil potential measurements. Additional measurements shall be made at each distribution service riser, with the reference electrode placed directly over the service line adjacent to the riser. Potentials shall be plotted versus distance to an approved scale. Locations where potentials do not meet or exceed the criteria shall be identified and reported to the Contracting Officer's representative.

3.5.5.2 Tanks

For underground tanks, measurements shall be taken from the reference electrode located:

a. Directly over the center of the tank.

b. At a point directly over the tank and midway between each pair of anodes.

At least six measurements shall be made.

3.5.5.3 Casing Tests

Before final acceptance of the installation, the electrical separation of carrier pipe from casings shall be tested and any short circuits corrected.

3.5.5.4 Interference Testing

Before final acceptance of the installation, interference tests shall be made with respect to any foreign pipes in cooperation with the owner of the foreign pipes. A full report of the tests giving all details shall be made. Stray current measurements shall be performed at all isolating locations and at locations where the new pipeline crosses foreign metallic pipes. The method of measurements and locations of measurements shall be submitted for approval. As a minimum, stray current measurements shall be performed at the following locations:

a. Connection point of new pipeline to existing pipeline.

b. Crossing points of new pipeline with existing lines.

Results of stray current measurements shall also be submitted for approval.

3.5.5.5 Holiday Test

Any damage to the protective covering during transit and handling shall be repaired before installation. After field-coating and wrapping has been applied, the entire pipe shall be inspected by an electric holiday detector with impressed current in accordance with NACE RP0188 using a full-ring, spring-type coil electrode. The holiday detector shall be equipped with a bell, buzzer, or other type of audible signal which sounds when a holiday is detected. Holidays in the protective covering shall be repaired upon detection. Occasional checks of holiday detector potential will be made by the Contracting Officer to determine suitability of the detector. Labor, materials, and equipment necessary for conducting the inspection shall be furnished by the Contractor. The coating system shall be inspected for holes, voids, cracks, and other damage during installation.

3.5.5.6 Recording Measurements

All pipe-to-soil potential measurements, including initial potentials where required, shall be recorded. The Contractor shall locate, correct and report to the Contracting Officer any short circuits to foreign pipes encountered during checkout of the installed cathodic protection system. Pipe-to-soil potential measurements shall be taken on as many pipes as necessary to determine the extent of protection or to locate short-circuits.

3.6 TRAINING COURSE

The Contractor shall conduct a training course for the operating staff as designated by the Contracting Officer. The training period shall consist of a total of 1 hour of normal working time and shall start after the system is functionally completed but prior to final acceptance tests. The field instructions shall cover all of the items contained in the operating and maintenance instructions, as well as demonstrations of routine maintenance operations, including testing procedures included in the maintenance instructions. At least 14 days prior to date of proposed conduction of the training course, the training course curriculum shall be submitted for approval, along with the proposed training date. Training shall consist of demonstration of test equipment, providing forms for test data and the tolerances which indicate that the system works.

3.7 CLEANUP

The Contractor shall be responsible for cleanup of the construction site. All paper bags, wire clippings, etc., shall be disposed of as directed. Paper bags, wire clippings and other waste shall not be put in bell holes or anodes excavation.

3.8 MISCELLANEOUS INSTALLATION AND TESTING

3.8.1 Coatings

All aboveground pipeline shall be coated as indicated or as approved. The coating shall have a minimum thickness of 0.18 mm 7 mil. The pipeline coating shall be in accordance with all applicable Federal, State, and local regulations.

3.8.2 Excavation

In the event rock is encountered in providing the required depth for anodes, the Contractor shall determine an alternate approved location and, if the depth is still not provided, an alternate plan shall be submitted to the Contracting Officer. Alternate techniques and depths must be approved prior to implementation.

3.9 SPARE PARTS

After approval of shop drawings, and not later than three (3) months prior to the date of beneficial occupancy, the Contractor shall furnish spare parts data for each different item of material and equipment specified. The data shall include a complete list of parts, special tools, and supplies, with current unit prices and source of supply. In addition, the Contractor shall supply information for material and equipment replacement for all other components of the complete system, including anodes, cables, splice kits and connectors, corrosion test stations, and any other components not listed above. [The Contractor shall furnish a reference cell on a reel with 120 m 350 feet of conductor, along with other accessories, and a digital voltmeter that can be used in the maintenance of this cathodic protection system. Use of this equipment shall be demonstrated in actual tests during the training course, which shall include a description of the the equipment and measurement of the pipe-to-soil potential, rainfall, and gas company voltages.]

3.10 SEEDING

Seeding shall be done by the Contractor, as directed, in all unsurfaced locations disturbed by this construction. In areas where grass cover exists, it is possible that sod can be carefully removed, watered, and stored during construction operations, and replaced after the operations are completed since it is estimated that no section of pipeline should remain uncovered for more than two (2) days. The use of sod in lieu of seeding shall require approval by the Contracting Officer.

3.11 SYSTEM TESTING

The Contractor shall submit a report including potential measurements taken at adequately-close intervals to establish that -850 millivolt potential is provided, and that the cathodic protection is not providing interference to other foreign pipes causing damage to paint or pipes. The report shall provide a narrative describing how the criteria of protection is achieved without damaging other pipe or structures in the area.

3.12 CLEARING OF TREES AND UNDERBRUSH

In the areas of the anode beds, all trees and underbrush shall be cleared and grubbed to the limits shown or indicated.

END OF SECTION

****
THIS SECTION ADDED IN ITS ENTIRETY BY AMENDMENT R0002
****

SECTION 13112

CATHODIC PROTECTION SYSTEM (IMPRESSED CURRENT)

NOTE: Editing the highlighted text remains the designer's responsibility.
****

PART 1 GENERAL

1.1 REFERENCES

The publications listed below form a part of this specification to the extent referenced. The publications are referred to in the text by basic designation only.

AMERICAN NATIONAL STANDARDS INSTITUTE (ANSI)

ANSI C80.1	(1995) Rigid Steel Conduit - Zinc Coated
ANSI C135.30	(1988) Zinc-Coated Ferrous Ground Rods for Overhead or Underground Line Construction

AMERICAN SOCIETY FOR TESTING AND MATERIALS (ASTM)

ASTM A 53	(1996) Pipe, Steel, Black and Hot-Dipped, Zinc-Coated Welded and Seamless
ASTM B 418	(1995a) Cast and Wrought Galvanic Zinc Anodes
ASTM B 843	(1996) Magnesium Alloy Anodes for Cathodic Protection
ASTM D 1248	(1984; R 1989) Polyethylene Plastics Molding and Extrusion Materials

CODE OF FEDERAL REGULATIONS

40 CFR 280	Technical Standards and Corrective Action Requirements for Owners and Operators of Underground Fuel Storage Tanks (UST)
49 CFR 192	Transportation of Natural and other Gas by Pipeline: Minimum Federal Safety Standards
49 CFR 195	Transportation of Hazardous Liquids by Pipeline

INSTITUTE OF ELECTRICAL AND ELECTRONICS ENGINEERS (IEEE)

IEEE Std. 81	(1983) Guide for Measuring Earth Resistivity, Ground Impedance, and Earth Surface Potentials of a Ground System (Part 1)

NACE INTERNATIONAL (NACE)

NACE RP0169	(1996) Control of External Corrosion on Underground or Submerged Metallic Piping Systems
NACE RP0188	(1990) Discontinuity (Holiday) Testing of Protective Coatings
NACE RP0193	(1993) External Cathodic Protection of On-Grade Metallic Storage Tank Bottoms
NACE RP0285	(1995) Corrosion Control of Underground Storage Tank Systems by Cathodic Protection
NACE RP0572	(1995) Design, Installation, Operation, and Maintenance of Impressed Current Deep Groundbeds

NATIONAL ELECTRICAL MANUFACTURERS ASSOCIATION (NEMA)

NEMA TC 2	(1990) Electrical Polyvinyl Chloride (PVC) Tubing (EPT) and Conduit (EPC-40 and EPC-80)
NEMA WC 5	(1992; Rev 1) Thermoplastic-Insulated Wire and Cable for the Transmission and Distribution of Electrical Energy

NATIONAL FIRE PROTECTION ASSOCIATION (NFPA)

NFPA 70	(1996; Errata 96-4) National Electrical Code

UNDERWRITERS LABORATORIES (UL)

UL 6	(1997) Rigid Metal Conduit
UL 467	(1993; Rev thru Aug 1996) Grounding and Bonding Equipment
UL 506	(1994; Rev Oct 1997) Specialty Transformers
UL 510	(1994;Rev thru Nov 1997) Polyvinyl Chloride, Polyethylene, and Rubber Insulating Tape
UL 514A	(1996; Rev Jul 1998) Metallic Outlet Boxes

1.2 GENERAL REQUIREMENTS

A complete, operating impressed current cathodic protection system in accordance with NFPA 70, the applicable federal, state and local regulations, and the requirements of this contract shall be provided. The

system shall include planning, inspecting the installation, adjusting and testing cathodic protection and test system using rectifiers and impressed current anodes, supplemented with sacrificial anodes as needed, for utilities and equipment shown. The cathodic protection system shall also include cables, connectors, splices, corrosion protection test stations, ace power panels, and any other equipment required for a complete operating system providing the specified protection. The cathodic protection system shall include (a) calculations for rectifier, anodes, and any recommendations for supplementing or changing the minimum design criteria to provide the specified potentials and (b) equipment, wiring, and wiring devices necessary to produce a continuous flow of direct current from anodes in the soil electrolyte to the pipe surfaces. The installation shall meet the specified protection criteria for a 25 year life.

1.2.1 Contractor's Modifications

The specified system is based on an impressed current system supplemented with magnesium anodes. The Contractor may modify the cathodic protection system after review of the project, site verification and analysis if the proposed modifications include the impressed current anodes and rectifiers and will provide better overall system performance. The modifications shall be fully described, shall be approved by the Contracting Officer and shall meet the following criteria. The proposed system shall achieve a minimum pipe-to-soil "Instant Off" potential of minus 850 millivolts with reference to a saturated copper-copper sulfate reference cell on the underground metallic components of the piping. The Contractor shall take resistivity measurements of the soil in the vicinity of the pipes and ground bed sites; based upon the measurements taken, the current and voltage of the rectifier shall be adjusted as required to produce a minimum of minus 850 millivolts "Instant Off" potential between the structure being tested and the reference cell. This potential shall be obtained over 95 percent of the metallic area without the "Instant Off" potential exceeding 1200 millivolts.

1.2.2 Isolators

Isolators are required to isolate the indicated pipes from any other structure. Isolators shall be provided with lightning protection and a test station as shown.

1.2.3 Anodes and Bond Wires

Anodes shall be installed in sufficient number and of the required type, size and spacing to obtain a uniform current distribution of 2.5 milliamperes per 0.09 square meters minimum to underground metal surfaces. For each cathodic protection system, the metallic components and structures to be protected shall be made electrically continuous. This shall be accomplished by installing bond wires between the various structures. Bonding of existing buried structures may also be required to preclude detrimental stray current effects and safety hazards. Provisions shall be included to return stray current to its source without damaging structures intercepting the stray current. The electrical isolation of underground facilities in accordance with acceptable industry practice shall be included under this section.

1.2.4 Surge Protection

Approved zinc grounding cells or sealed weatherproof lightning arrestor devices shall be installed across insulated flanges or fittings installed in underground piping as indicated on the drawings. The arrestor shall be gapless, self-healing, solid state type. Zinc anode composition shall conform to ASTM B 418, Type II. Lead wires shall be number 6 AWG copper with high molecular weight polyethylene (HMWPE) insulation. The zinc grounding cells shall not be prepackaged in backfill but shall be installed as detailed on the drawings. Lightning arrestors or zinc grounding cells are not required for insulated flanges on metallic components used on nonmetallic piping systems.

1.2.5 Sacrificial Anodes

Sacrificial high potential magnesium anodes shall be located as required to provide localized cathodic protection or supplemental cathodic protection for the impressed current system. Each sacrificial magnesium anode shall be routed through a test station. The magnesium anode shall not be connected to the pipe.

1.2.6 Nonmetallic Pipe Systems

When nonmetallic pipe is approved, direct buried or submerged metallic components of the pipe system shall have cathodic protection. Metallic components are connectors, tees, fire hydrants, valves, short pipes, elbows, tie rods, or other metallic equipment. As a minimum, each metallic component shall be protected with a 4.1 kg magnesium anode connected through a test station. The use of nonmetallic pipe does not change other requirements of the specifications such as submittals, testing, or design calculations for each metallic component. Deviations due to the use of nonmetallic pipe shall be approved by the Contracting Officer.

1.2.6.1 Coatings

Coatings for metallic components shall be as required for metallic fittings. Protective covering (coating and taping) shall be completed and tested on each metallic component and shall be as required for underground metallic pipe.

1.2.6.2 Tracer Wire

When a nonmetallic pipe line is used to extend or add to an existing metallic line, an insulated No. 8 AWG copper wire shall be connected to a terminal in a test station located at each point of transition from metallic pipe to nonmetallic pipe. At each of these test stations, the tracer wire terminal shall be strapped or bonded to the terminal for the negative connection wire to the existing metallic line. The tracer wire shall be run the length of the new nonmetallic line. This wire shall be used as a locator tracer wire and to maintain continuity to any future extension of the pipe line.

1.2.7 Services of "Corrosion Expert"

The Contractor shall obtain the services of a "corrosion expert" to supervise, inspect, and test the installation and performance of the cathodic protection system. "Corrosion expert" refers to a person, who, by

reason of thorough knowledge of the physical sciences and the principles of engineering and mathematics, acquired by professional education and related practical experience, is qualified to engage in the practice of corrosion control of buried metallic piping and tank systems. Such a person must be accredited or certified by the National Association of Corrosion Engineers (NACE) as a NACE Accredited Corrosion Specialist or a NACE certified Cathodic Protection (CP) Specialist or be a registered professional engineer who has certification or licensing that includes education and experience in corrosion control of buried or submerged metallic piping and tank systems, if such certification or licensing includes 5 years experience in corrosion control on underground metallic surfaces of the type under this contract. The "corrosion expert" shall make at least 3 visits to the project site. The first of these visits shall include obtaining soil resistivity data, acknowledging the type of pipeline coatings to be used and reporting to the Contractor the type of cathodic protection required. Once the submittals are approved and the materials delivered, the "corrosion expert" shall revisit the site to ensure the Contractor understands installation practices and laying out the components. The third visit shall involve testing the installed cathodic protection systems and training applicable personnel on proper maintenance techniques. The "corrosion expert" shall supervise installation and testing of all cathodic protection.

1.3 SUBMITTALS

Government approval is required for submittals with a "GA" designation; submittals having an "FIO" designation are for information only. The following shall be submitted in accordance with Section 01330 SUBMITTAL PROCEDURES:

SD-01 Data

Materials and Equipment GA.

Within 30 days after receipt of notice to proceed, an itemized list of equipment and materials including item number, quantity, and manufacturer of each item. The list shall be accompanied by a description of procedures for each type of testing and adjustment, including testing of coating for thickness and holidays. Installation of materials and equipment shall not commence until this submittal is approved.

Spare Parts;

Spare parts data for each different item of material and equipment specified, after approval of detail drawings and not later than 2 months prior to the date of beneficial occupancy. The data shall include a complete list of parts, special tools, and supplies, with current unit prices and source of supply. One spare anode of each type shall be furnished.

SD-04 Drawings

Cathodic Protection System; GA.

Six copies of detail drawings consisting of a complete list of equipment and material including manufacturer's descriptive and technical literature, catalog cuts, results of system design calculations including soil resistivity, installation instructions and certified test data stating the

maximum recommended anode current output density and the rate of gaseous production, if any, at that current density. Detail drawings shall contain complete wiring and schematic diagrams and any other details required to demonstrate that the system has been coordinated and will function properly as a unit.

Contractor's Modifications; GA.

Six copies of detail drawings showing proposed changes in location, scope or performance indicating any variations from, additions to, or clarifications of contract drawings. The drawings shall show proposed changes in anode arrangement, anode size and number, anode materials and layout details, conduit size, wire size, mounting details, wiring diagram, method for electrically isolating each pipe, and any other pertinent information to the proper installation and performance of the system.

SD-08 Statements

Services of "Corrosion Expert"; GA.

Evidence of qualifications of the "corrosion expert."

(a) The "corrosion expert's" name and qualifications shall be certified in writing to the Contracting Officer prior to the start of construction.

(b) Certification shall be submitted giving the name of the firm, the number of years of experience, and a list of not less than five (5) of the firm's installations three (3) or more years old that have been tested and found satisfactory.

SD-09 Reports

Tests and Measurements.

Test reports in booklet form tabulating field tests and measurements performed, upon completion and testing of the installed system and including close interval potential survey, casing and interference tests, final system test verifying protection, insulated joint and bond tests, and holiday coating test. Each test report shall indicate the final position of controls. A certified test report showing that the connecting method has passed a 120-day laboratory test without failure at the place of connection, wherein the anode is subjected to maximum recommended current output while immersed in a 3 percent sodium chloride solution.

Contractor's Modifications; GA.

Final report regarding supplemental magnesium anode installation. The report shall include pipe-to-soil measurements throughout the affected area, indicating that the additions corrected the conditions which made the additional anodes necessary, and current measurements for the additional anodes. The following special materials and information are required: Calculations on current and voltage for 36V rectifier plus rectifier and meter specifications; taping materials and conductors; zinc grounding cell, installation and testing procedures, and equipment; coating material; system design calculations for rectifier, anode number, life, and parameters to achieve protective potential; backfill shield material and installation

details showing waterproofing; bonding and waterproofing details; insulated resistance wire; exothermic weld equipment and material.

SD-13 Certificates

Cathodic Protection System.

Proof that the materials and equipment furnished under this section conform to the specified requirements contained in the referenced standards or publications. The label or listing by the specified agency will be acceptable evidence of such compliance.

SD-18 Records

Training Course.

The proposed Training Course Curriculum (including topics and dates of discussion) indicating that all of the items contained in the operating and maintenance instructions, as well as demonstrations of routine maintenance operations, including testing procedures included in the maintenance instructions, are to be covered.

SD-19 Operation and Maintenance Manuals

Cathodic Protection System.

Six copies of operating manual outlining the step-by-step procedures required for system startup, operation, adjustment of current flow, and shutdown. The manuals shall include the manufacturer's name, model number, service manual, parts list, and brief description of all equipment and their basic operating features. Six copies of maintenance manual listing routine maintenance procedures, recommendation for maintenance testing, possible breakdowns and repairs, and troubleshooting guides. The manuals shall include single line diagrams for the system as installed; instructions in making pipe-to-reference cell potential measurements and frequency of monitoring; instructions for dielectric connections, interference and sacrificial anode bonds; instructions shall include precautions to ensure safe conditions during repair of pipe system.

PART 2 PRODUCTS

2.1 IMPRESSED CURRENT ANODES

2.1.1 Bare High Silicon Cast-Iron Anodes

Cast-iron anodes shall be of the size indicated and shall conform to the following requirements:

2.1.1.1 Chemical Composition (Nominal)

Element	Percent by Weight Grade 2
Silicon	14.20-14.75
Manganese	1.50 Max.
Carbon	0.75-1.15

Chromium	3.25-5.00
Iron	Balance

2.1.1.2 Electrical Resistivity

Seventy-two microhm-centimeter at minus 7 degrees C 20 degrees F.

2.1.1.3 Physical Properties (Nominal)

Tensile strength	103.4 MPa
Compressive strength	689.5 MPa
Brinell hardness	520
Density	7000 kilograms per cubic meter
Melting point	1260 degrees C
Coefficient of expansion from 0 to 100 degree C	132 nanometer per degree C

Tensile strength	15,000 psi
Compressive strength	100,000 psi
Brinell hardness	520
Density	7.0 grams per cubic centimeter
Melting point	2300 degrees F
Coefficient of expansion from 32 to 212 degrees F	0.00000733 centimeter per degree F

2.1.2 Bare Graphite Anodes

Bare graphite anodes shall have a maximum electrical resistivity of 0.0011 ohm-centimeter.

2.1.3 Canister Contained Anodes

Canister contained anodes shall be packed at the factory in sheet metal canisters with calcined petroleum coke breeze. The coke shall have a resistivity of 0.1 ohm-cm tested at 1034 kPa. The coke shall be 11244 kg/cubic meter or greater. The maximum particle size shall be 1 mm 0.039 inches and the coke shall be dust-free. The canisters shall be capped with tight fitting end caps secured to the body of the canister. The canister shall provide a minimum annular space of 75 mm all around the anode. The connecting cable shall pass through a hole in an end cap designed to be tight fitting with the cable and protected from sharp edges with a plastic or rubber grommet. The anodes shall be centered in the canisters and the annular space filled with coke breeze compacted in place.

2.1.4 Anode Connecting Cables

Anodes shall have connecting cables installed at the factory.

2.1.5 Mixed Metal Oxide Anodes

Mixed metal oxide anodes shall be of the size indicated and shall conform to the following requirements.

2.1.5.1 Conductive Material

The electrically conductive coating shall contain a mixture consisting primarily of iridium, tantalum, and titanium oxides. The average composition is generally a 50/50 atomic percent mixture of iridium and titanium oxides, with a small amount of tantalum. The resistivity, as tested by the manufacturer, shall be no more than 0.002 ohm-centimeter, and the bond strength shall be greater than 50 MPa to guarantee the current capacity life and the quality of the conductive ceramic coating. The adhesion or bond strength shall be determined by epoxy bonding a 2.54 mm 0.1 inch diameter stud to the ceramic coating and measuring the load to failure about 70 MPa of either the epoxy or the interface between the coating and the substrate. The anode must be inert and the electrically conductive ceramic coating dimensionally stable. The ceramic coated anode shall be capable of sustaining a current density of 100 ampere per square meter in an oxygen generating electrolyte at 66 degrees C for 20 years, to ensure the current capacity life. An accelerated current capacity life test shall be performed by the manufacturer on every lot of anode wire used to construct the anode as described. The mixed metal oxide coating shall be applied to the wire anode by a firm that is regularly engaged in and has a minimum 5 years experience in manufacturing and applying mixed metal oxide coatings to titanium anode substrates. The mixed metal oxide must be sintered to the titanium surface as to remain tightly bound to the surface when bent 180 degrees onto itself.

2.1.5.2 Anode Life Test

The anode wire material shall sustain current densities of 100 ampere per square meter in an oxygen generating electrolyte for 20 years. The manufacturer shall certify that a representative sample taken from the same lot used to construct the anode, has been tested and meets the following criteria. The test cell sustains a current density of 10,000 ampere per square meter in a 15 weight percent sulfuric acid electrolyte at 66 degrees C without an increase in anode to cathode potential of more than 1 volt. The cell containing the anode shall be powered with a constant current power supply for the 30 day test period. The representative sample shall be 125 mm in length taken from the lot of wire that is to be used for the anode.

2.1.5.3 Canister Contained Mixed Metal Oxide Anodes

Canister contained mixed metal oxide anodes shall be packed at the factory in light weight, light gauge steel uni-body TIG welded canisters with calcinated petroleum coke breeze. The canisters shall be capped with TIG welded steel and caps providing a totally encapsulated construction. The connecting cable shall pass through a hole in an end cap designed to be tight fitting with a heavy duty strain relief allowing for handling of the canister by the cable. The anode shall be centered in the canister by centralizers to maintain rod position.

2.1.5.4 Anode Connecting Cables

Anodes shall have connecting cables installed at the factory. The connection between the anode rod or ribbon and the lead wire shall be made with a solid crimp couple with solder. The connection shall be sealed in cast epoxy.

2.1.5.5 Canister Connection Cables

Canister connecting cables shall consist of an ultra low resistance solder connection which is a minimum of three times stronger than the cable. For ceramic coated canister anodes, the cable connection shall consist of two molded dielectric layers (pressure seals), a flexible backfill resin encapsulant stabilizer, a schedule 40 PVC pipe Type 1 seal, and Type 1 PVC pipe end plugs. The seals and end plugs shall resist chlorine gas and acid.

2.1.5.6 Deleted

2.2 RECTIFIERS AND ASSOCIATED EQUIPMENT

2.2.1 Rectifier Unit

Rectifier unit shall consist of a transformer, rectifying elements, transformer tap adjuster, terminal block, one combination volt-ammeter, one toggle switch for each meter, fuse holders with fuses for each dc circuit, variable resistors, an ac power-supply circuit breaker, all wired and assembled in a cabinet to be located within the Mechanical Room. The overall efficiency of the rectifier shall be not less than 65 percent when operated at nameplate rating and shall be capable of supplying continuous full rated output at an ambient temperature of 44 degrees C with expected life in excess of 10 years.

2.2.1.1 Transformer

Transformer shall conform to UL 506.

2.2.1.2 Rectifiers

Rectifying elements shall be silicon diodes connected to provide full-wave rectification. Silicon diodes shall be protected by selenium surge cells or varistors against over-voltage surges and by current-limiting devices against over-current surges.

2.2.1.3 Meters

Meters shall be accurate to within plus or minus 2 percent of full scale at 27 degrees C, and shall possess temperature stability above and below 27 degrees C and shall possess temperature stability above and below 27 degrees C of at least 1 percent per 5 degrees C. Separate meters shall be 63.5 mm nominal size or larger.

2.2.1.4 Circuit Breaker

A Three-pole, flush-mounted, fully magnetic, properly rated non-terminal type circuit breaker shall be installed in the primary circuit of the rectifier supply transformer.

2.2.1.5 Fuses

Cartridge-type fuses with suitable fuse holders shall be provided in each leg of the dc circuit.

2.2.2 Cabinet Construction

Cabinet shall be constructed of not lighter than 1.56 mm hot dipped galvanized steel, and shall be provided with a full door. The enclosure shall have oil-resistant gasket. The door shall be hinged and have a hasp that will permit the use of a padlock. The cabinet shall be fitted with screened openings of the proper size to provide for adequate cooling. Holes, conduit knockouts, or threaded hubs of sufficient size and number shall be conveniently located.

2.2.2.1 Wiring Diagram

A complete wiring diagram of the power unit showing both the ac supply and the dc connections to anodes shall be on the inside of the cabinet door. All components shall be shown and labeled.

2.2.2.2 Grounding Provisions

Grounding provisions shall be as specified in SECTION 16415, ELECTRICAL WORK, INTERIOR. Comply with NFPA 70 and UL 467 including a ground terminal in the cabinet, that is bonded to the facility ground. The grounding conductor from the terminal to the earth grounding system shall be solid or stranded copper not smaller than No. 6 AWG. The earth grounding system shall consist of the facility grounding system.

2.2.2.3 Deleted

2.2.2.4 Cabinet Paint System

The cabinet and mounting support shall be hot dipped galvanized steel with the manufacturer's standard painting system.

2.2.3 Wiring

Wiring shall be installed in accordance with NFPA 70 utilizing type TW or RHW or polyethylene insulation. Fittings for conduit and cable work shall conform to UL 514A. Outlets shall be of the threaded hub type with gasketed covers. Conduit shall be hub type with gasketed covers. Conduit shall be securely fastened at 2.4 m intervals or less. Splices shall be made in outlet fittings only. Conductors shall be color coded for identification. Cable for anode header and distribution shall be No. 2 AWG stranded copper wire with type cathodic protection high molecular weight polyethylene Dular/Halar insulation.

2.2.4 Deleted

2.3 COKE BREEZE

2.3.1 Calcined Petroleum Coke Breeze (Dry)

Breeze shall conform to the following requirements:

2.3.1.1 Electrical Resistivity

Resistivity shall not exceed 1 milliohm-meter (0.1 ohm-cm) Great Lake Carbon C 12 A Test Method.

2.3.1.2 General Backfill Specifications

Bulk Density - 1044 to 1204 kg/cubic meter
Fixed Carbon - 99.0% or greater
Volatiles - 0.2% or less
Sizing - 100% less than 13 mm1/2 inch

2.3.2 Metallurgical Coke Breeze (Processed)

Breeze shall conform to the following requirements:

2.3.2.1 Electrical Resistivity (Nominal)

Nominal electrical resistivity shall be:

a. 100 milliohm-meter 10 ohm-centimeter Max., tightly compacted.

b. 100 milliohm-meter to 150 milliohm-meter, 10 to 15 ohm-centimeter, lightly compacted.

c. 150 to 200 milliohm-meter, 15 to 20 ohm-centimeter, loose.

2.3.2.2 General Backfill Specifications

Bulk density - 608 to 672 kg per cubic meter
Fixed Carbon - 80% or greater
Sizing - 100% less than 10 mm 3/8 inch

2.4 MISCELLANEOUS MATERIALS

2.4.1 Electrical Wire

2.4.1.1 Anode Connecting Wire

Anode connecting wire shall be No. 8 AWG stranded copper wire with type CP high molecular weight polyethylene insulation, 2.8 mm thick, 600 volt rating, in accordance with NEMA WC 5. Cable-to-anode contact resistance shall be 0.003 ohms maximum. Cable-to-anode contact resistance shall be 0.02 ohms maximum.

2.4.1.2 Anode Header Cable

Cable for anode header and distribution shall be No. 2 AWG stranded copper wire with type CP high molecular weight polyethylene, 2.8 mm thick insulation, 600-volt rating, in accordance with NEMA WC 5.

2.4.1.3 Test Wires

Test wires shall be No. 12 AWG stranded copper wire with NFPA 70 Type TW or RHW or polyethylene insulation.

2.4.1.4 Resistance Wire

Resistance wire shall be AWG No. 16 nickel-chromium wire.

2.4.2 Deleted

2.4.3 Deleted

2.4.4 Conduit

Nonmetallic conduit shall conform to NEMA TC 2.

2.4.5 Test Boxes and Junction Boxes

Boxes shall be outdoor type conforming to UL 514A.

2.4.6 Deleted

2.4.7 Polyethylene Insulation

Polyethylene insulation shall comply with the requirements of ASTM D 1248 and of the following types, classes, and grades:

2.4.7.1 High Molecular Weight Polyethylene

High molecular weight polyethylene shall be Type I, Class C, Grade E5.

2.4.7.2 High Density Polyethylene

High density polyethylene shall be Type III, Class C, Grade E3.

2.4.8 Test Stations

Test stations shall be complete with an insulated terminal block having the indicated number of terminals and shall be provided with a lockable cover and have a cast-in legend, "C.P. Test". Test stations shall be complete with an insulated terminal block having the required number of terminals. (One terminal required for each conductor). Sufficient test stations to monitor underground isolation points shall be provided. Test-bond stations (potential measurement and stray current control) shall be provided to monitor pipe to soil potential of proposed underground pipes or existing underground metallic structures which may conduct stray current from the new cathodic protection system. The location of the test-bond stations shall ensure that the pipe to soil potential of metallic pipe not designated to be protected is not made less negative by the energization of the cathodic protection system. Test station terminal connections and the terminal conductor shall be permanently tagged to identify each termination of the conductors (e.g. identify the conductors connected to the protected structures). Conductors shall be permanently identified in the station by means of plastic or metal tags, or plastic sleeves to indicate termination. Each conductor shall be color coded in accordance with the drawings. The station test facility, including permanent Cu-Cu S04 reference cells and test returns shall be installed as indicated. Pavement inserts shall be nonmetallic and shall allow Cu-Cu S04 reference electrode to contact the electrolyte beneath the pavement surface. Abbreviations shall not be used. Welding of electrical connections shall be as follows: Exothermic welds shall be CADweld, or approved equal. Use and selection of these materials and welding equipment shall be in accordance with the manufacturer's recommendations.

2.4.9 Calibrated Shunts

Shunts calibrated in current per potential (e.g. mA/V) shall be installed between the lead or header wire connected to the anode and the current collector lead connected to the structure. The calibration of the shunt shall be clearly marked and installed to be visible.

2.4.10 Sealing and Dielectric Compound

Sealing and dielectric compound shall be a black, rubber based compound that is soft, permanently pliable, tacky, moldable, and unbacked. Compound shall be applied as recommended by the manufacturer, but not less than 3 mm thick.

2.4.11 Protective Covering

Except as otherwise specified, protective covering for underground metallic components including pipe and fittings shall be applied mechanically in a factory or field plant specially equipped for the purpose. Valves and fittings that cannot be coated and wrapped mechanically shall have the protective covering applied by hand, preferably at the plant applying the covering to the pipe. Joints shall be coated and wrapped by hand. Hand coating and wrapping shall produce a covering equal in thickness to the covering applied mechanically. Piping and components installed in valve boxes or manholes shall also receive the specified protective coating.

2.4.11.1 Pipeline Metallic Components

Underground metallic pipelines and structures shall have a good quality factory applied coating. This includes carbon steel, cast iron and ductile iron pipelines or vessels. If nonmetallic pipelines are installed, metallic fittings or pipe sections shall be coated as follows.

a. The nominal thickness of the metallic pipe joint or other component coating shall be [0.2] [0.4] [0.6] [1.0] [1.5] [_____] mm, [8] [16] [24] [40] [60] [_____] mils, plus or minus 5 percent. Information to be obtained by the designer.

b. Pipe and joint coating for factory applied or field repair material shall be applied as recommended by the manufacturer and shall be one of the following:

(1) Continuously extruded polyethylene and adhesive coating system.

(2) Polyvinyl chloride pressure-sensitive adhesive tape.

(3) High density polyethylene/bituminous rubber compound tape.

(4) Butyl rubber tape.

(5) Coal tar epoxy.

2.4.11.2 Field Joints

Field joints shall be coated with material compatible with the pipeline coating compound. The joint coating material shall be applied to an equal thickness as the pipeline coating. Unbonded coatings shall not be used on

buried metallic piping. This prohibition includes unbonded polymer wraps or tubes.

2.4.11.3 Inspection of Pipe Coatings

Once the pipeline or vessel is set in the trench, an inspection of the coating shall be conducted. This inspection shall include electrical holiday detection as described in paragraph TESTS AND MEASUREMENTS.

2.4.11.4 Above Ground Piping System

Above ground piping shall be given two coats of exterior oil paint. Surface preparation shall be as recommended by paint manufacturer, except as follows: ferrous, shop primed surfaces shall be touched up with ferrous metal primer; surfaces that have not been shop primed shall be solvent cleaned; surfaces that contain loose rust, mil scale, or other foreign substances shall be mechanically cleaned by power wire brushing and primed with ferrous metal primer; and primed surfaces shall be finished with two coats of exterior oil paint or vinyl paint.

2.4.12 Preformed Sheaths

Preformed sheaths for encapsulating electrical wire splices to be buried underground shall fit the insulated wires entering the spliced joint.

2.4.13 Epoxy Potting Compound

Epoxy potting compound for encapsulating electrical wire splices to be buried underground shall be a two package system made for the purpose.

2.4.14 Backfill Shields

Backfill shields shall consist of approved pipeline wrapping or fiberglass reinforced, coal-tar impregnated tape, or plastic weld caps, specifically made for the purpose.

2.4.15 Electrical Tape

Pressure-sensitive vinyl plastic electrical tape shall conform to UL 510.

2.4.16 Cable Marker Tape

Traceable marker tape shall be manufactured for the purpose and clearly labeled "Cathodic Protection Cable Buried Below".

2.4.17 Electrically Isolating Pipe Joints

Electrically isolating pipe joints for above or below ground use shall be flexible, mechanical pipe couplings of an electrically isolating type consisting of bolted or compression design provided with electrically isolating joint harness if required to provide pull-out strength] [flexible, integral electrically isolating pipe couplings designed for field installation by means of a swaging system and providing pull-out strength with a factor of safety] [nonflexible flanged type electrically isolating pipe joints to be field assembled] [nonflexible factory assembled electrically isolating pipe joints designed with stub ends for installation by welding and providing pull-out strength with a factor of safety]. This

needs to be investigated further. The base has identified a manufacturer of a dielectric flange, the Heck High Temperature Electric Cathodic Protection Kit, made by Miami Valley Gasket Company Incorporated, as a possible solution. Attempt should be made to match these salient characteristics.

2.4.17.1 Threaded Fittings

Threaded type electrically isolating pipe joints shall have molded plastic screw threads and be used above ground only. Machined plastic screw threads shall not be used.

2.4.17.2 Electrically Isolating Pipe Joints

Electrically isolating pipe joints shall be of a type that is in regular factory production.

2.4.18 Electrically Conductive Couplings

Electrically conductive couplings shall be of a type that has a published maximum electrical resistance rating given in the manufacturer's literature. Cradles and seals shall be of a type that is in regular factory production made for the purpose of electrically isolating the carrier pipe from the casing and preventing the incursion of water into the annular space.

2.4.19 Joint and Continuity Bonds

Bonds shall be provided across joints or any electrically discontinuous connections in the piping, and other pipes and structures with other than welded or threaded joints included in this cathodic protection system. Unless otherwise specified, bonds between structures and across joints in pipe with other than welded or threaded joints shall be with No. 4 AWG stranded copper cable with polyethylene insulation. Bonds between structures shall contain sufficient slack for any anticipated movement between structures. Bonds across pipe joints shall contain a minimum of 100 mm 4 inches of slack to allow for pipe movement and soil stress. Bonds shall be attached by exothermic welding. Exothermic weld areas shall be insulated with coating compound and approved by the Contracting Officer. Continuity bonds shall be installed as necessary to reduce stray current interference. Additional joint bonding shall be done where determined during construction or testing or as directed. Joint bonding shall include excavation and backfilling. There shall be a minimum of 2 continuity bonds between each structure and other than welded or threaded joints. Electrical continuity shall be tested across joints with other than welded or threaded joints and across metallic portions of sewage lift stations and water booster stations.

2.4.19.1 Resistance Bonds

Resistance bonds shall be adjusted for minimum interference while achieving the criteria of protection. Alternate methods may be used when approved.

2.4.19.2 Stray Current Measurements

Stray current measurements shall be performed as indicated. Alternate methods may be used when approved. The stray current test report shall indicate location of test, type of pipes tested, and method of testing.

2.4.20 Electrical Isolation of Structures

Isolating fittings, including isolating flanges and couplings, shall be installed above ground or in a concrete hand hole. As a minimum, isolating flanges or unions shall be provided at the following locations:

a. Connection of new piping to existing pipes.

b. Pressure piping under floor slab to a building.

Additionally, isolation shall be provided between new pipe lines and foreign pipes that cross the new lines within 3 meters..

2.5 MAGNESIUM ANODES

Weights and dimensions of magnesium anodes shall be approximately as follows:

TYPICAL MAGNESIUM ANODE SIZES
(Cross sections may be round, square, or D shaped)

NOMINAL WT. kg.	APPROX. SIZE (mm)	NOMINAL GROSS WT kg PACKAGED IN BACKFILL	NOMINAL PACKAGE DIMENSIONS (mm)
1.4	76 X 76 X 127	3.6	133 X 133 X 203
2.3	76 X 76 X 203	5.9	133 X 133 X 286
4.1	76 X 76 X 356	12.3	133 X 508
5.5	102 X 102 X 305	14.5	191 X 457
7.7	102 X 102 X 432	20.5	191 X 610
14.5	127 X 127 X 521	30.9	216 X 711
22.7	178 X 178 X 406	45.5	254 X 610

2.5.1 Composition

Anode shall be of high potential magnesium alloy, made of primary magnesium obtained from sea water or brine, and not from scrap metal. Magnesium anodes shall conform to ASTM B 843 and to the following analysis unless otherwise indicated:

Element	Percent by Weight
Aluminum	0.02 maximum
Manganese	1.50 maximum
Zinc	0.05
Silicon	0.10 maximum
Copper	0.02 maximum
Nickel	0.002 maximum
Iron	0.03 maximum
Impurities	0.30 maximum
Magnesium	Remainder

The Contractor shall furnish spectrographic analyses on samples from each heat or batch of anodes used on this project.

2.5.2 Packaged Anodes

Anodes shall be provided in packaged form with the anode surrounded by specially prepared quick-wetting backfill and contained in a cloth or paper sack. Anodes shall be centered in the backfill material. The backfill material shall have the following composition, unless otherwise indicated.

Material	Percent by Weight
Gypsum	75
Bentonite	20
Sodium Sulfate	5

2.5.3 Lead Wires

Anode lead wires shall consist of No. 10 solid copper wire, with TW insulation. Lead wires shall be not less than 3 meters in length, without splices.

2.5.4 Connection Wires

Wires shall consist of No. 10 solid copper wire with RHW-USE or polyethylene insulation.

2.5.5 Insulation

Type RHW-USE insulation shall comply with NFPA 70. Polyethylene insulation shall comply with ASTM D 1248; high molecular weight polyethylene shall be Type I, Class C, Grade E5; high density polyethylene shall be Type III, Class C, Grade E3.

2.5.6 Conduit Steel

Conduit steel shall conform to UL 6 and ANSI C80.1.

2.5.7 Tape

Pressure-sensitive vinyl plastic electrical tape shall conform to UL 510.

2.5.8 Backfill Shields

Shields shall consist of approved wrapping of reinforced fiberglass coal-tar impregnated tape, or plastic weld caps specifically made for the purpose and installed in accordance with the manufacturer's recommendations. When joint bonds are required, due to the use of mechanical joints, the entire joint shall be protected with kraft paper joint cover. The joint cover shall be filled with poured hot coal-tar enamel.

2.5.9 Electrical Connections

Electrical connections shall be done as follows:

a. Exothermic welds shall be "Cadweld" or Burndy "Thermo-Weld" or approved equal. Use of these materials shall be in accordance with the manufacturer's recommendations.

b. Electrical shielded arc welds on steel pipe shall be approved via shop drawing action.

c. Other methods of welding shall be specifically approved for use by the pipe manufacturer.

2.5.10 Anode Storage

Storage for magnesium anodes will be designated by the Contracting Officer. If anodes are not stored in a building, they shall be protected from inclement weather. Packaged anodes damaged as result of improper handling or weather exposure shall be resacked by the Contractor and the required backfill added.

2.5.11 Anode Installation

Anode configuration and size shall be as indicated. A minimum of six anodes are required to achieve minus 850 millivolts "instant off" potential and shall be required on the piping components or structure. Details shown are indicative of the general type of material required and are not intended to restrict selection of materials or of any particular manufacturer. The anode system shall be designed for a life of 25 years of continuous operation.

2.6 LEAD WIRE CONNECTIONS

Lead wire to structure connections shall be by exothermic welding process. Weld charges made specifically for use on cast iron shall be used on cast iron pipe. A backfill shield filled with a pipeline mastic sealant or material compatible with the coating shall be placed over the weld connection and shall cover the exposed metal adequately.

PART 3 EXECUTION

3.1 CRITERIA OF PROTECTION

Acceptance criteria for determining the adequacy of protection on a buried pipe shall be in accordance with NACE RP0169, and NACE RP0193, and NACE RP0285 and as specified below.

3.1.1 Iron and Steel

The following method a. shall be used for testing cathodic protection voltages. If more than one method is required, method b. shall be used:

a. A negative voltage of at least minus 850 millivolts as measured between the pipe and a saturated copper-copper sulphate reference electrode contacting the earth directly over the pipe. Determination of this voltage shall be made with the cathodic protection system in operation. Voltage drops shall be considered for valid interpretation of this voltage measurement. A minimum of minus 850 millivolts "instant off" potential between the pipe being tested and the reference cell shall be achieved over 95 percent of the area of the structure. Adequate number of measurements shall be obtained over the entire structure, pipe, tank, or other metallic component to verify and record achievement of minus 850 millivolts "instant off". This potential shall be obtained over 95

percent of the total metallic area without the "instant off" potential exceeding 1200 millivolts.

b. A minimum polarization voltage shift of 100 millivolts as measured between the pipe and a saturated copper-copper sulphate reference electrode contacting the earth directly over the pipe. This polarization voltage shift shall be determined by interrupting the protective current and measuring the polarization decay. When the protective current is interrupted, an immediate voltage shift will occur. The voltage reading, after the immediate shift, shall be used as the base reading from which to measure polarization decay. Measurements achieving 100 millivolts shall be made over 95 percent of the metallic surface.

3.1.2 Deleted

3.1.3 Deleted

3.2 GROUND BED INSTALLATION

3.2.1 Shallow Ground Beds

Shallow ground beds shall contain size and quantity of anodes designed to meet performance criteria of the cathodic protection system at an initial operating current output density not exceeding 50 percent of maximum recommended current output density.

3.2.1.1 Horizontally Buried Bare Anodes

Horizontally buried bare anodes shall be bedded on and covered with metallurgical coke breeze in a trench excavated for the purpose at depths, spacing and locations as shown. Anodes shall be completely surrounded by the backfill at bottom, sides, and top for a distance of not less than 100 mm. Backfill shall be compacted.

3.2.1.2 Deleted

3.2.1.3 Horizontally Buried Canister-Contained Anodes

Horizontally buried canister-contained anodes shall be buried in a trench excavated for the purpose at depths, spacing, and locations shown.

3.2.1.4 Deleted

3.2.1.5 Cable Protection

Positive cable to the ground bed and negative cable to the pipe to be protected shall be buried a minimum depth of 750 mm except where above ground construction utilizing conduit is used.

3.2.1.6 Multiple Anode Systems

Multiple anode systems shall consist of groups of anodes connected in parallel to a header cable, buried in the ground at depths, spacing, and locations shown. The anodes shall be buried horizontally.

3.2.1.7 Distributed Anode Systems

Distributed anode systems shall consist of a line or row of anodes connected in parallel to a header cable and buried in the ground parallel to the pipeline. The anodes shall be at the pipeline at depths, spacing, and locations shown. The anodes shall be buried horizontally.

3.2.2 Deleted

3.3 MAGNESIUM ANODE INSTALLATION

Installation shall not proceed without the presence of the Contracting Officer, unless otherwise authorized. Anode locations may be changed to clear obstructions when approved. Anodes shall be installed in sufficient number and of the required type, size, and spacing to obtain a uniform current distribution surface on the structure. Prepackaged anodes shall be installed as shown on the drawings.

3.3.1 Installation of Packaged Anodes

Packaged anodes shall be installed completely dry, and shall be lowered into holes by rope sling or by grasping the cloth gather. The anode lead wire shall not be used in lowering the anodes. The hole shall be backfilled with fine soil in 150 mm 6 inch layers and each layer shall be hand-tamped around the anode. The tamper shall not strike the anode or lead wire. If immediate testing is to be performed, water shall be added only after backfilling and tamping has been completed to a point 150 mm above the anode. Approximately 8 liters of water shall be poured into the hole; after the water is absorbed by the soil, backfilling and tamping shall be completed to the top of the hole. Anodes shall be installed as shown. When rock is found prior to achieving specified depth, anode may be installed horizontally to a depth at least as deep as the bottom of the pipe, with the approval of the Contracting Officer.

3.3.2 Underground Metal Pipe Line

Anodes shall be installed 610 mm below the line to be protected unless otherwise noted on the drawings. To facilitate periodic electrical measurements during the life of the sacrificial anode system and to reduce the output current of the anodes if required, anode lead wires in a single group of anodes shall be buried a minimum of 610 mm and each anode lead wire shall be connected to an individual terminal in a test station. The anode lead cable shall make contact with the structure only through a test station. Resistance wire shall be installed between the anode lead cable and the pipe cable in the test station to reduce the current output, if required.

3.3.3 Lead and Resistance Wire Splices

Lead wire splicing, when necessary, shall be made with copper split bolt connectors of proper size. The joint shall be carefully wrapped with at least 3 layers of electrical tape. Resistance wire connections shall be done with silver solder and the solder joints wrapped with a minimum of 3 layers of pressure-sensitive tape.

3.3.4 Magnesium Anodes for Metallic Components

As a minimum, each metallic component shall be protected with 2 4.1 kg magnesium anodes located on each side of the metallic component and routed through a test station. Fire hydrant pipe component shall have a minimum of 2 4.1 kg magnesium anodes routed through a test station for each hydrant. Pipe under concrete slab shall have a minimum of 5 7.7 kg anodes for each location where metal pipe enters the building under the slab. A permanent reference cell shall be provided adjacent to the pipe entrance to the slab. Conductors shall be routed to a test station. Each valve shall have a minimum of 2 4.1 kg magnesium anodes routed through a test station. Sections of metallic pipe 6.1 meters long, when used where force mains are within 3 meters of the water pipe, shall have a minimum of 4 7.7 kg anodes.

3.4 MISCELLANEOUS INSTALLATION

3.4.1 Rectifier Installation

Mounting shall be as shown. Wall mounting shall be equipped with a channel bracket, lifting eyes, and a keyhole at the top.

3.4.2 Wire Connections

3.4.2.1 Wire Splicing

Connecting wire splicing shall be made with copper compression connectors or exothermic welds, following instructions of the manufacturer. Split-bolt type connectors shall not be used.

3.4.2.2 Steel Surfaces

Connections to ferrous pipe shall be made by exothermic weld methods as manufactured by an approved manufacturer for the type of pipe. Electric arc welded connections and other types of welded connections to ferrous pipe and structures shall be approved before use.

3.4.3 Pipe Joints

****

NOTE: This paragraph will be coordinated with and referenced in mechanical and electrical specifications.

****

3.4.3.1 Electrical Continuity

Underground pipe shall be electrically continuous except at places where electrically isolating joints are specified. Pipe joined by means other than welding shall meet the following electrical continuity requirements:

a. Mechanical joints that are not factory designed to provide electrical continuity shall be bonded by installing a metallic bond across the joint. The bonding connections shall be made by the exothermic welding process.

b. Mechanical joints designed to provide electrical continuity may be used.

3.4.3.2 Coating

Mechanical joints and fittings of either the electrically conductive or insulating type shall be coated with an underground type dielectric coating system. Where external electrical continuity bonds are installed across mechanical joints, bare or exposed metal, welds, bare wire and exposed coupling parts shall be coated with a coating system.

a. Couplings and fittings which have a low profile exterior designed to permit tape coating shall be primed and wrapped with an underground type pipe tape system or two-part epoxy system.

b. Couplings and fittings that cannot be properly taped shall be enclosed in a spaced mold manufactured for the purpose and filled with hot applied bituminous compound not exceeding 135 degrees C in application temperature.

3.4.3.3 Electrical Isolation of Structures

Electrical isolation of structures shall be as follows:

a. Isolating Fittings: Isolating flanges and couplings shall be installed aboveground, or within manholes, wherever possible, but an isolating device that electrically separates a pipeline shall not be installed in a confined area where a combustible atmosphere may collect unless precautions are taken to prevent arcing such as by means of externally located surge arresters, grounding cells, or other means. Isolating flanges and couplings in lines entering buildings shall be located at least 300 mm above grade or floor level. Pipelines entering buildings either below or above ground shall be electrically isolated from the structure wall with an electrically isolating wall sleeve.

b. Gas Distribution Piping: Electrical isolation shall be provided at each building riser pipe to the pressure regulator, at all points where a short circuit to another structure or to a foreign structure may occur, and at other locations as indicated.

c. High Temperature Water Line Supply and Return Piping: Electrical isolation shall be provided at each building entrance, and at other locations as indicated.

d. Fire Suppression: Electrical isolation shall be provided in each pipe at the building as shown.

e. Copper Piping: Copper piping shall be electrically isolated at both ends of the pipe run.

f. Underground Storage Tanks (UST): Tanks shall be electrically isolated from other metallic structures. Components protected with the tank such as pipes, vents, anchors, and fill pipes shall be bonded to the tank.

3.4.4 Dissimilar Metals

****

NOTE: This paragraph will be coordinated with and referenced in mechanical and electrical specifications.
****

Buried piping of dissimilar metals including new and old steel piping, excepting valves, shall be electrically separated by means of electrically insulating joints at every place of connection. The insulating joint, including the pipes, shall be coated with an underground type dielectric coating for a minimum distance of 10 diameters on each side of the joint.

3.4.5 Ferrous Valves

Dissimilar ferrous valves in a buried ferrous pipeline, including the pipe, shall be coated with an underground type dielectric coating for a minimum distance of 10 diameters on each side of the valve.

3.4.6 Brass or Bronze Valves

Brass or bronze valves shall not be used in a buried ferrous pipeline.

3.4.7 Metal Pipe Junction

If the dissimilar metal pipe junction, including valves, is not buried and is exposed to atmosphere only, the connection or valve, including the pipe, shall be coated with an underground type dielectric coating for a minimum distance of 3 diameters on each side of the junction.

3.4.8 Casing

****
NOTE: This paragraph will be deleted if mechanical and electrical specifications include these requirements.
****

Where a pipeline is installed in a casing under a roadway or railway, the pipeline shall be electrically isolated from the casing, and the annular space sealed against incursion of water.

3.4.9 Test Stations

Test stations shall be of the type and location shown and shall be curb box mounted. Buried electrically isolating joints shall be provided with test wire connections brought to a test station. Changes in designated location shall have prior approval. Unless otherwise shown, other test stations shall be located as follows:

a. At 300 m intervals or less.

b. Where the pipe or conduit crosses any other metal pipe.

c. At both ends of casings under roadways and railways.

d. Where both ends of an insulating joint are not accessible above ground for testing purposes.

3.5 TESTS AND MEASUREMENTS

3.5.1 Baseline Potentials

Each test and measurement will be witnessed by the Contracting Officer. The Contractor shall notify the Contracting Officer a minimum of 5 working days prior to each test. After backfill of the pipe and anodes is completed, but before the anodes are connected to the pipe, the static potential-to-soil of the pipe shall be measured. The locations of these measurements shall be identical to the locations specified for pipe-to-reference electrode potential measurements.

3.5.2 Isolation Testing

Before the anode system is connected to the pipe, an isolation test shall be made at each isolating joint or fitting. This test shall demonstrate that no metallic contact, or short circuit exists between the two isolated sections of the pipe. Any isolating fittings installed and found to be defective shall be reported to the Contracting Officer.

3.5.2.1 Insulation Checker

A Model 601 insulation checker, as manufactured by "Gas Electronics" or an approved equal, shall be used for isolating flange electrical testing in accordance with manufacturer's operating instructions. An isolating joint that is good will read full scale on the meter; if an isolating joint is shorted, the meter pointer will be deflected at near zero on the meter scale. Location of the fault shall be determined from the instructions and the joint shall be repaired. If an isolating joint is located inside a vault, the pipe shall be sleeved with insulator when entering and leaving the vault.

3.5.2.2 Cathodic Protection Meter

A Model B3A2 cathodic protection meter, as manufactured by "M. C. Miller" or an approved equal using the continuity check circuit shall be used for isolating flange electrical testing. This test shall be performed in addition to the Model 601 insulation checker. Continuity is checked across the isolated joint after the test lead wire is shorted together and the meter adjusted to scale. A full scale deflection indicates the system is shorted at some location. The Model 601 verifies that the particular insulation under test is good and the Model B3A2 verifies that the system is isolated. If the system is shorted, further testing shall be performed to isolate the location of the short.

3.5.3 Anode Output

After the rectifier is energized, the current output of the individual anode leads shall be measured by using an approved method. This may be done with a shunt and MV meter, a low-resistance ammeter, or a clamp-on milliammeter. The total current shall be measured and compared to the sum of all anode currents and to the rectifier output current. If an individual anode output current meets or exceeds the recommended output for that anode, the system shall be turned down or balancing resistors installed. Calculation of the wattage of the resistors shall be sufficient to handle the maximum load which will be encountered on the anode lead. All measurements obtained, the date, time, and locations of all measurements shall be recorded.

3.5.4 Electrode Potential Measurements

Upon completion of the installation and with the entire cathodic protection system in operation, electrode potential measurements shall be made using a copper-copper sulphate reference electrode and a potentiometer-voltmeter, or a direct current voltmeter having an internal resistance (sensitivity) of not less than 10 megohms per volt and a full scale of 10 volts. The locations of these measurements shall be identical to the locations used for baseline potentials. The values obtained and the date, time, and locations of measurements shall be recorded. No less than 8 measurements shall be made over any length of line or component. Additional measurements shall be made at each distribution service riser, with the reference electrode placed directly over the service line.

3.5.5 Location of Measurements

3.5.5.1 Coated Piping or Conduit

For coated piping or conduit, measurements shall be taken from the reference electrode located in contact with the earth, directly over the pipe. Connection to the pipe shall be made at service risers, valves, test leads, or by other means suitable for test purposes. Pipe to soil potential measurements shall be made at intervals not exceeding 1.5 meters. The Contractor may use a continuous pipe to soil potential profile in lieu of 1.5 m interval pipe to soil potential measurements. Additional measurements shall be made at each distribution service riser, with the reference electrode placed directly over the service line adjacent to the riser. Potentials shall be plotted versus distance to an approved scale. Locations where potentials do not meet or exceed the criteria shall be identified and reported to the Contracting Officer.

3.5.5.2 Deleted

3.5.6 Casing Tests

Before final acceptance of the installation, the electrical separation of carrier pipe from casings shall be tested and any short circuits corrected.

3.5.7 Interference Testing

Before final acceptance of the installation, interference tests shall be made with respect to any foreign pipes in cooperation with the owner of the foreign pipes. A full report of the tests giving all details shall be made.

3.5.8 Holiday Test

Any damage to the protective covering during transit and handling shall be repaired before installation. After field coating and wrapping has been applied, the entire pipe shall be inspected by an electric holiday detector with impressed current in accordance with NACE RP0188 using a full ring, spring type coil electrode. The holiday detector shall be equipped with a bell, buzzer, or other type of audible signal which sounds when a holiday is detected. Holidays in the protective covering shall be repaired upon detection. Occasional checks of holiday detector potential will be made by the Contracting Officer to determine suitability of the detector. Labor, materials, and equipment necessary for conducting the inspection shall be

furnished by the Contractor. The coating system shall be inspected for holes, voids, cracks, and other damage during installation.

3.5.9 Recording Measurements

All pipe-to-soil potential measurements including initial potentials where required shall be recorded. The Contractor shall locate, correct and report to Contracting Officer any short circuits to foreign pipes encountered during checkout of the installed cathodic protection system. Pipe-to-soil potential measurements are required on as many pipes as necessary to determine the extent of protection or to locate short-circuits.

3.6 TRAINING COURSE

The Contractor shall conduct a training course for the operating staff as designated by the Contracting Officer. The training period shall consist of a total of 16 hours of normal working time and shall start after the system is functionally completed but prior to final acceptance tests. The field instructions shall cover all of the items contained in the operating and maintenance instructions, as well as demonstrations of routine maintenance operations, including testing procedures included in the maintenance instructions. At least 14 days prior to date of proposed conduction of the training course, the training course curriculum shall be submitted for approval, along with the proposed training date. Training shall consist of demonstration of test equipment, providing forms for test data and the tolerances which indicate that the system works satisfactorily.

END OF SECTION

This page intentionally blank

SECTION 13125

PATIO COVER
AND MISCELLANEOUS SITE FURNISHINGS

PART 1 GENERAL

1.1 REQUIREMENTS

All work and materials shall conform to the requirements of the related specification sections.

1.2 REFERENCES

The publications listed below form a part of this specification to the extent referenced. The publications shall be referred to in the text by basic designation only.

ASTM D 648	(1996) Deflection Temperature of Plastics under Flexural Load
ASTM D 2990	(1995) Tensile, Compressive, and Flexural Creep and Creep-Rupture of Plastics

1.3 SUBMITTALS

Government approval is required for submittals with a "GA" designation; submittals having an "FIO" designation are for information only. The following shall be submitted in accordance with Section 01330 SUBMITTAL PROCEDURES:

SD-04 Drawings; FIO.

Complete shop drawings shall be submitted for the patio cover canopy and foundations. The patio cover drawings shall include all materials and layout information. Sealed engineered calculations shall be submitted with the shop drawings that demonstrate that the patio cover meets the load carrying requirements dictated for Malmstrom Air Force Base.

SD-08 Statements Delivery; FIO.

The following work plans, before work is started.

a. Delivery Schedule at least 10 days prior to the intended date of the first delivery.

SD-09 Reports

Recycled Material; FIO

A report of site furnishing parts consisting of recycled materials. Product specification data shall provide test information for deflection and creep in accordance with ASTM D 648 and ASTM D 2990 for site

furnishings which use plastic lumber as a component, shall be submitted. The data shall provide a comparison of deflection and creep measurements to other comparable materials.

a. Delivery Schedule at least 10 days prior to the intended date of the first delivery.

SD-17 Manufacturers catalogue cuts and design data; FIO.

Manufacturers catalogue cuts and design data shall be submitted for the patio cover and miscellaneous site furnishings including trash receptacles, bike racks, and picnic tables.

1.4 RECYCLED MATERIAL

1.4.1 General Requirements

Recycled materials shall contain a minimum 85 percent recycled post-consumer product. Recycled materials shall be constructed or manufactured with a maximum 6 mm deflection or creep in any member in conformance with ASTM D 648 and ASTM D 2990.

1.4.2 High Density Polyethylene

The contractor shall provide panels and components molded of ultraviolet (UV) and color stabilized polyethylene, with minimum 6 mm wall thickness; exposed edges shall be smoothed, rounded, and free of burrs and points; and the material shall be resistant to fading, cracking, fogging, and shattering. The material shall be non-toxic and have no discernible contaminates such as paper, foil, or wood. The material shall contain no more than 3 percent air voids. Material shall be resistant to deformation from solar radiation heat gain. Recycled materials to include plastic lumber shall not be used as structural components of site furnishings.

PART 2 PRODUCTS

2.1 PATIO COVER

Contractor shall supply all materials and workmanship to construct patio cover. Patio cover shall be a hexagonal steel framed column and beam shelter structure with a 7.3 m (nominal) roof diameter. All exposed steel ends shall be capped with ‘bird-proof’ closures. Columns, beams, and purlins shall be factory painted with rust-inhibitor primer, and finished in a standard gloss brown enamel. All hardware shall be zinc-plated and included from manufacturer. Hip-roof decking shall be pre-cut, 26 gauge steel panels primed and finished in medium tan or beige color (Litchfield Industries color-Timber Tan or Poligon color-Surrey Beige). 29 gauge eave, ridge, and cap trims shall be provided in same color as roof deck. Roof pitch shall be 4:12 or 5:12. Eave height shall be approximately 2.3 m. Columns shall be surface-mounted with base plates and hardware provided by manufacturer. Patio cover shall be Litchfield Industries, Inc. Model No. 8024; W.H. Porter, Inc. Poligon Model No. Hex 24 M; or approved equal.

2.2 MISCELLANEOUS SITE FURNISHINGS

2.2.1 Trash Receptacle

Trash receptacle shall be constructed of heavy 9 mm thick solid steel bars formed and welded to define a profile. The profile constitutes the Bethesda Series of the Ironsites design group by Victor Stanley, Inc.

The receptacle shall be surface-mounted and shipped in standard dark bronze powder-coated finish. The receptacle shall have a raised spun steel dome (without ash urn) or domed top constructed of matching materials and permanently attached to the receptacle. The receptacle shall include a 90 liter capacity liner with easy removal for maintenance. Trash receptacle shall be Ironsites Model S-42 (with S-2 top) by Victor Stanley, Inc., TimberForm Renaissance Model 2811-DT by Columbia Cascade.

2.2.2 Picnic Tables

Picnic Tables shall be permanently installed, 1.83 m long, constructed of 58 mm galvanized square or round steel tubing frames, galvanized steel bolt plates, and galvanized steel tubing cross braces, all powder coated dark brown. Tops and seats shall be 100 mm x 150 mm, 100% recycled high density polyethylene, tan or beige color. A minimum of one table shall be provided with accessibility for persons with disabilities, by adjustment to seating lengths and support location. Picnic tables shall be Landscape Structures, Inc. model no. 100097; Litchfield Ind. Inc. model no. 4403; or approved equal.

2.2.3 Benches

Benches shall be permanently installed (direct bury), 1.83 m long, constructed of 58 mm galvanized square or round steel tubing frames, galvanized steel bolt plates, and galvanized steel tubing cross braces, all powder coated dark brown. Seats shall be 75 mm x 100 mm, 100% recycled high density polyethylene, tan or beige color. Backs shall be 50 mm x 100 mm, 100% recycled high density polyethylene, tan or beige color. Benches shall be Landscape Structures, Inc. model no. 100093; Litchfield Industries, Inc. model no. 3040; or approved equal.

2.2.4 Bike Racks

Bike racks shall be a hanger-style rack built to hold a minimum of 6 bikes as accessed from both sides of the rack. The bike rack shall be constructed of a heavy-duty 58 mm O.D. steel mainframe, dark brown powdercoated factory finish. Hangers shall be 19 mm diameter round steel bars, also dark brown powdercoated factory finish. Bike racks shall be Cora Bike Rack, Inc. Model Expo 4506; Urban Accessories Model E; or approved equal.

PART 3 EXECUTION

3.1 PATIO COVER

Contractor shall supply all materials and workmanship to construct patio cover, including foundations, and using sound construction principals and materials. Erection methods to conform to OSHA standards for labor safety. Locate and install where shown on the drawings. Concrete slab edge shall extend a minimum of 300 mm beyond patio cover roof outline. Concrete slab shall be jointed in hexagonal pattern as indicated on the drawings. Masonry fascia shall be installed around columns as indicated on drawings. Contractor shall provide and install one building number sign on outside beam of patio cover. Patio cover building number is 641. Sign shall be constructed, sized, and mounted similar to building number sign specified for dormitory. See Architectural plans.

3.2 MISCELLANEOUS SITE FURNISHINGS ASSEMBLY AND TESTING

Locate and install all other site furnishings described above where shown on drawings. Double-sided access bike racks shall be permanently installed to allow 1.83 m minimum clearance at front and back, and

450 mm minimum clearance on each side. The site furnishings shall be assembled and anchored according to manufacturer's instructions or as indicated. Each site furnishing shall be tested to determine a secure and correct installation. Site furnishings that do not comply shall be reinstalled. Fasteners and anchors determined to be non-compliant shall be replaced.

Picnic tables, and bike racks shall be surface mounted. Benches shall be permanently installed by the direct bury method. Trash receptacles shall be free standing.

END OF SECTION

SECTION 13851

FIRE DETECTION AND ALARM SYSTEM, ADDRESSABLE

PART 1 GENERAL

1.1 REFERENCES

The publications listed below form a part of this specification to the extent referenced. The publications are referred to in the text by basic designation only.

AMERICAN NATIONAL STANDARDS INSTITUTE (ANSI)

ANSI S3.41 (1990; R 1996) Audible Emergency Evacuation Signals

CODE OF FEDERAL REGULATIONS (CFR)

47 CFR 15 Radio Frequency Devices

FACTORY MUTUAL ENGINEERING AND RESEARCH (FM)

FM P7825a (1998) Approval Guide Fire Protection

INSTITUTE OF ELECTRICAL AND ELECTRONICS ENGINEERS (IEEE)

IEEE C62.41 (1991; R 1995) Surge Voltages in Low-Voltage AC Power Circuits

NATIONAL FIRE PROTECTION ASSOCIATION (NFPA)

NFPA 70 (1999) National Electrical Code

NFPA 72 (1999) National Fire Alarm Code

NFPA 90A (1996) Installation of Air Conditioning and Ventilating Systems

NFPA 1221 (1994) Installation, Maintenance and Use of Public Fire Service Communication Systems

UNDERWRITERS LABORATORIES (UL)

UL 6 (1997) Rigid Metal Conduit

UL 38 (1994; Rev Nov 1994) Manually Actuated Signaling Boxes for Use with Fire-Protective Signaling Systems

UL 228 (1997) Door Closers-Holders, With or Without Integral Smoke Detectors

UL 268 (1996; Rev thru Jun 1998) Smoke Detectors for Fire Protective Signaling Systems

UL 268A (1998) Smoke Detectors for Duct Applications

UL 464 (1996; Rev May 1997) Audible Signal Appliances

UL 521 (1993; Rev Oct 1994) Heat Detectors for Fire Protective Signaling Systems

UL 632/ANSI C33.41 (1994; Rev Sep 1994) Electrically-Actuated Transmitters

UL 797 (1993; Rev thru Mar 1997) Electrical Metallic Tubing

UL 864 (1996) Control Units for Fire-Protective Signaling Systems

UL 1242 (1996; Rev Mar 1998) Intermediate Metal Conduit

UL 1971 (1995; Rev thru May 1997) Signaling Devices for the Hearing Impaired

1.2 GENERAL REQUIREMENTS

1.2.1 Standard Products

Material and equipment shall be the standard products of a manufacturer regularly engaged in the manufacture of the products and shall be items that have been in satisfactory use for at least 2 years prior to bid opening. Equipment shall be supported by a service organization that can provide service within 24 hours.

1.2.2 Nameplates

Major components of equipment shall have the manufacturer's name, address, type or style, voltage and current rating, and catalog number on a noncorrosive and nonheat-sensitive plate which is securely attached to the equipment.

1.2.3 Keys and Locks

Locks shall be keyed alike.

1.2.4 Tags

Tags with stamped identification number shall be furnished for keys and locks.

1.2.5 Verification of Dimensions

The Contractor shall become familiar with all details of the work, verify all dimensions in the field, and shall advise the Contracting Officer of any discrepancy before performing the work.

1.2.6 Compliance

The fire detection and internal alarm system and the central reporting system shall be configured in accordance with NFPA 72. The equipment furnished shall be compatible and be UL listed or FM approved or approved or listed by a nationally recognized testing laboratory in accordance with the applicable NFPA standards.

1.2.7 Manufacturer's Services

Services of a manufacturer's representative who is experienced in the installation, adjustment, testing, and operation of the equipment specified shall be provided. The representative shall supervise the installation, adjustment, and testing of the equipment.

1.2.8 Qualifications of Installer

For installation of fire alarm detection systems, fire protection/suppression systems, and any of the components, the technician installing this equipment must be licensed in the State of Montana and hold the proper endorsement for such installation. The license and endorsements are as follows:

SAF=Fire Alarms
SEF=Extinquishing Systems
SAFS=Special Agent Fire Suppression System

A licensed journeyman electrician can install fire alarm systems and its components if the above endorsements are stamped on his license and he is factory trained, or NICET II certified and factory trained in the installation of the fire alarm devices being installed. The installer must be NICET II certified and licensed with the State of Montana licensing program to inspect, test, and certify the operational condition of the system. All licensees, endorsements and NICET certifications must be presented to the contracting officers and the fire prevention officers (341 CES/CEFT), along with the company name and name(s) of personnel installing the system before work is to begin. Current licenses, endorsements, and NICET certification must be on file with the Department of Commerce, Professional and Occupational Licensing Bureau, 11 North Jackson, P.P. Box 200513, Helena, MT 59620-0513.

1.3 SYSTEM DESIGN

1.3.1 Operation

The fire alarm and detection system shall be a complete, supervised fire alarm system. The system shall be activated into the alarm mode by actuation of any alarm initiating device. The system shall remain in the alarm mode until initiating device is reset and the fire alarm control panel is reset and restored to normal. Alarm initiating devices shall be connected to signal line circuits (SLC), Style 7, in accordance with NFPA 72. Alarm indicating appliances shall be connected to notification appliance circuits (NAC), Style 7 in accordance with NFPA 72. A two-loop conduit system shall be provided so that if any one conduit and all conductors contained in that conduit are severed all NAC, or SLC on that circuit shall remain functional. A two-loop system is not applicable to the central fire alarm communication center from the local panels. All textual, audible, and visual appliances and systems shall comply with NFPA 72.

Addressable system shall be microcomputer (microprocessor or microcontroller) based with a minimum word size of eight bits.

a. Sufficient memory shall be provided to perform as specified and as shown for addressable system.

b. Individual identity of each addressable device shall be provided for the following conditions:

alarm
trouble
open
short
appliances missing/failed
remote detector - sensitivity adjustment from the panel for smoke detectors

c. All addressable devices shall have the capability of individually being disabled or enabled from the panel.

1.3.2 Operational Features

The system shall have the following operating features:

a. Electrical supervision of alarm SLC and NAC. Smoke detectors shall have combined alarm initiating and power circuits.

b. Electrical supervision of the primary power (ac) supply, battery voltage, placement of alarm zone module (card, PC board) within the control panel, and transmitter tripping circuit integrity.

c. Trouble buzzer and trouble lamp (light emitting diode or neon light) to activate upon a single break, open, or ground fault condition which prevents the required normal operation of the system. The trouble signal shall also operate upon loss of primary power (ac) supply, low battery voltage, removal of alarm module (card, PC board), and disconnection of the circuit used for transmitting alarm signals off-premises. A trouble alarm silence switch shall be provided which will silence the trouble buzzer, but will not extinguish the trouble indicator lamp. After the system returns to normal operating conditions, the trouble buzzer shall again sound until the silencing switch returns to normal position, unless automatic trouble reset is provided.

d. Transmitter disconnect switch to allow testing and maintenance of the system without activating the transmitter but shall provide a trouble signal when disconnected and a restoration signal when reconnected.

e. Evacuation alarm silencing switch or switches which, when activated, will silence alarm devices, but will not affect the zone indicating lamp nor the operation of the transmitter. This switch shall be over-ridden upon activation of a subsequent alarm from an unalarmed zone and the alarm devices will be activated.

f. Electrical supervision of circuits used for supervisory signal services. Supervision shall detect any open, short, or ground.

g. Confirmation or verification modules used on smoke detection initiating circuits. The modules shall interrupt the transmission of an alarm signal to the system control panel for a factory set period. This

interruption period shall be adjustable from 1 to 60 seconds and be factory set at 20 seconds. Immediately following the interruption period, a confirmation period shall be in effect during which time an alarm signal if present will be sent immediately to the control panel. All fire alarm devices other than smoke detectors shall be prohibited on circuits controlled by confirmation or verification modules.

h. Groups for alarm SLC shall be arranged as indicated on the contract drawings

i. Sleeping room smoke detectors shall initiate local alarm and activate the building fire alarm system.

1.3.3 Alarm Functions

An alarm condition on a circuit shall automatically initiate the following functions:

a. Transmission of signals over the station radio fire reporting system.

b. Visual indications of the individual alarmed device and its location on the fire alarm control panel annunciator and on the remote annunciator.

c. Continuous sounding of alarm notification appliances throughout the building.

d. Closure of doors held open by electromagnetic devices or detectors with door holders.

e. All initiating, supervisory and trouble signal to be transmitted.

f. Deactivation of the air handling units throughout the building.

1.3.4 Primary Power

Operating power shall be provided as required by paragraph Power Supply for the System. Transfer from normal to emergency power or restoration from emergency to normal power shall be fully automatic and not cause transmission of a false alarm. Loss of ac power shall not prevent transmission of a signal via the fire reporting system upon operation of any initiating circuit.

1.3.5 Battery Backup Power

Battery backup power shall be through use of rechargeable, sealed-type storage batteries and battery charger.

1.4 SUBMITTALS

Government approval is required for submittals with a "GA" designation; submittals having an "FI0" designation are for information only. The following shall be submitted in accordance with Section 01330 SUBMITTAL PROCEDURES:

Submittals for this Section 13851 - FIRE DETECTION AND ALARM SYSTEM, and the Duct Smoke Detectors in Section 15951 – DIRECT DIGITAL CONTROL FOR HVAC, and Section 13930 - WET PIPE SPRINKLER SYSTEM, FIRE PROTECTION, shall be combined to form a single transmittal.

SD-01 Data

Battery; GA.

Substantiating battery calculations for supervisory and alarm power requirements. Ampere-hour requirements for each system component and each panel component, and the battery recharging period shall be included.Voltage Drop; GA.

Voltage drop calculations for signaling appliance circuits to indicate that sufficient voltage is available for proper appliance operation.

Spare Parts; FIO.

Spare parts data for each different item of material and equipment specified, not later than 6 months prior to the date of beneficial occupancy. Data shall include a complete list of parts and supplies with the current unit prices and source of supply and a list of the parts recommended by the manufacturer to be replaced after 1 year of service.

Qualifications; GA.

Qualifications, with verification of experience and license number, of a Registered Professional Engineer with at least 4 years of current experience in the design of the fire protection and detection systems. This engineer must perform the various specification items required by this section to be performed by a registered Professional Engineer.

SD-04 Drawings

Fire Alarm Reporting System; GA.

Detail drawings, signed by the Registered Professional Engineer, consisting of a complete list of equipment and material, including manufacturer's descriptive and technical literature, catalog cuts, and installation instructions. Note that the contract drawings show layouts based on typical detectors. The contractor shall check the layout based on the actual detectors to be installed and make any necessary revisions in the detail drawings. The detail drawings shall also contain complete wiring and schematic diagrams for the equipment furnished, equipment layout, and any other details required to demonstrate that the system has been coordinated and will properly function as a unit.

Detailed point-to-point wiring diagram, signed by the Registered Professional Engineer, showing all points of connection. Diagram shall include connections between system devices, appliances, control panels, supervised devices, and all equipment that is activated or controlled by the panel.

SD-06 Instructions

Fire Alarm Reporting System; GA.

Six copies of operating instructions outlining step-by-step procedures required for system startup, operation, and shutdown. The instructions shall include the manufacturer's name, model number, service manual, parts list, and brief description of all equipment and their basic operating features. Six copies of

maintenance instructions listing routine maintenance procedures, possible breakdowns and repairs, and troubleshooting guide. The instructions shall include conduit layout, equipment layout and simplified wiring, and control diagrams of the system as installed. Instructions shall be approved prior to training.

Training; FIO.

Lesson plans and training data, in manual format, for the training courses.

SD-08 Statements

Test Procedures; FIO.

Detailed test procedures, signed by the Registered Professional Engineer, for the fire detection and alarm system 60 days prior to performing system tests.

SD-09 Reports

Testing; FIO.

Test reports in booklet form showing all field tests performed to prove compliance with the specified performance criteria, upon completion and testing of the installed system. Each test report shall document all readings, test results and indicate the final position of controls.

SD-13 Certificates

Equipment; FIO.

Certified copies of current approvals or listings issued by UL, FM or other nationally recognized testing laboratory, showing compliance with specified NFPA standards.

Installer; GA.

The Contractor shall provide documentation demonstrating that its fire detection and alarm system installer has been regularly engaged in the installation of fire detection and alarm systems meeting NFPA standards for a minimum of three years immediately preceding commencement of this contract. Such documentation shall specifically include proof of satisfactory performance on at least three projects similar to that required by these specifications, including the names and telephone numbers of using agency points of contact for each of these projects. Documentation shall indicate the type of each system installed and include a written certificate that each system has performed satisfactorily in the manner specified for a period of not less than 12 months following completion. All such data shall be submitted 30 days prior to commencement of installation for approval of the Contracting Officer. Listing of the installer under "Protective Signaling Services - Local, Auxiliary, Remote Station Proprietary (UUJS)" of UL-04 shall be accepted as equivalent proof of compliance with the foregoing experience requirements.

1.5 DELIVERY AND STORAGE

All equipment delivered and placed in storage shall be stored with protection from the weather, humidity and temperature variation, dirt and dust, and any other contaminants.

PART 2 PRODUCTS

2.1 CONTROL PANEL

Control panel shall comply with all the applicable requirements of UL 864. Panel shall be modular, installed in a surface mounted steel cabinet with hinged door and cylinder lock. Control panel shall be a clean, uncluttered, and orderly assembled panel containing all components and equipment required to provide the specified operating and supervisory functions of the system. Loss of power, including any or all batteries, shall not require the reloading of a program. Upon restoration of power, startup shall be automatic, and shall not require any manual operation. The loss of primary power or the sequence of applying primary or emergency power shall not affect the transmission of alarm, supervisory or trouble signals. The control panel shall be located at the front entry way of the facility.

2.1.1 Visual Annunciators (LCD)

Control panel to indicate the location by room name and number and the individual device in alarm or trouble.

2.1.2 Cabinets

Cabinets shall be provided with ample gutter space to allow proper clearance between the cabinet and live parts of the panel equipment. If more than one modular unit is required to form a control panel, the units shall be installed in a single cabinet large enough to accommodate all units. Cabinets shall have manufacturer's standard finish and color.

2.1.3 Circuit Connections

Circuit conductors entering or leaving the panel shall be connected to screw-type terminals with each terminal marked for identification.

2.2 STORAGE BATTERIES

Storage batteries shall be provided and shall be the sealed, lead-calcium type requiring no additional water. The batteries shall have ample capacity, with primary power disconnected, to operate the fire alarm system for a period of 48 hours. Following this period of operation via batteries, the batteries shall have ample capacity to operate all components of the system, including all alarm signaling devices in the total alarm mode for a minimum period of 15 minutes. Batteries shall be sized to deliver 50 percent more ampere/hours based on a 48-hour discharged rate than required for the calculated capacities. Battery cabinet shall be within the control panel or a separate cabinet. Battery shall be provided with overcurrent protection in accordance with NFPA 72.

2.3 BATTERY CHARGER

Battery charger shall be completely automatic, with high/low charging rate, capable of restoring the batteries from full discharge to full charge within 12 hours. A separate ammeter shall be provided for indicating rate of charge. A separate voltmeter shall be provided to indicate the state of the battery charge. A pilot light indicating when batteries are manually placed on a high rate of charge shall be

provided as part of the unit assembly if a high rate switch is provided. Charger shall be located in control panel or battery cabinet.

2.4 MANUAL FIRE ALARM STATIONS (ADDRESSABLE)

Manual fire alarm stations shall conform to the applicable requirements of UL 38. Manual stations shall be connected into alarm-initiating circuits. Stations shall be installed on semi-flush mounted outlet boxes. Stations shall be single action type. Stations shall be red with raised letter operating instructions of contrasting color. Stations requiring the breaking of glass or plastic panels for operation are not acceptable. Stations employing glass rods are not acceptable. The use of a key or wrench shall be required to reset the station. Gravity or mercury switches are not acceptable. Switches and contacts shall be rated for the voltage and current upon which they operate. Stations shall have a separate screw terminal for each conductor. Surface mounted boxes shall be painted the same color as the fire alarm manual stations. Addressable pull stations shall be capable of being field programmed, shall latch upon operation and remain latched until manually reset.

2.5 FIRE DETECTING DEVICES

Fire detecting devices shall comply with the applicable requirements of NFPA 72, NFPA 90A, UL 268, and UL 521. The detectors shall be provided as indicated. Detector base shall have screw terminals for making connections. No solder connections will be allowed. Detectors shall be connected into alarm initiating circuits. Detectors located in concealed locations (above ceiling, etc.) shall have a remote visible indicator lamp. Installed devices shall conform to the classification of the area. Addressable fire detecting devices shall be dynamically supervised and uniquely identified in the control panel.

2.5.1 Heat Detectors (Addressable)

Heat detectors shall be designed for detection of fire by combination fixed temperature and rate-of-rise principle. Heat detectors shall be rated for a minimum of 15.2 m spacing (smooth-ceiling rated) in accordance with UL 521. Detectors located in areas subject to moisture, exterior atmospheric conditions or hazardous locations as defined by NFPA 70, shall be types approved for such locations. Heat detectors located in attic spaces or similar concealed spaces below the roof shall be intermediate temperature rated.

2.5.1.1 Combination Fixed-Temperature and Rate-of-Rise Detectors (Addressable)

Detectors shall be designed for semi-flush outlet box mounting and supported independently of wiring connections. Contacts shall be self-resetting after response to rate-of-rise principle. Under fixed temperature actuation, the detector shall have a permanent external indication which is readily visible. Detector units located in boiler rooms, showers, or other areas subject to abnormal temperature changes shall operate on fixed temperature principle only. Rating for fixed temperature portion shall be 57.2 degrees C in temperature conditioned spaces.

2.5.1.2 Fixed Temperature Detectors (Addressable)

Detectors shall be designed for semi-flush outlet box mounting and supported independently of wiring connections. Detectors are designed to detect high heat. The detectors shall have a specific temperature setting of 57.2 degrees C, except detectors in the attic spaces shall have a settings of 93.3 degrees C, and mechanical room shall have a setting of 76.3 degrees C.

2.5.2 Smoke Detectors (Addressable)

Detectors shall be designed for detection of abnormal smoke densities. Smoke detectors shall be photoelectric type. Detectors shall contain a visible indicator lamp that shows when the unit is in alarm condition. Detectors shall not be adversely affected by vibration or pressure. Detectors shall be the plug-in type in which the detector base contains terminals for making all wiring connections. Detectors that are in concealed (above false ceilings, etc.) locations shall have a remote visible indicator lamp. Sleeping room smoke detectors shall initiate local alarm and activate the building fire alarm system.

2.5.2.2 Photoelectric Detectors (Addressable)

Detectors shall operate on a light scattering concept using an LED light source. Failure of the LED shall not cause an alarm condition. Detectors shall be factory set for sensitivity and shall require no field adjustments of any kind. Detectors shall have an obscuration rating between 1.9 and 2.4 percent per foot when tested in accordance with UL 268.

2.5.2.3 Duct Detectors (Addressable)

Duct detectors are provided under Section 15951 – DIRECT DIGITAL CONTROL FOR HVAC.

2.6 NOTIFICATION APPLIANCES

Audible appliances shall be heavy duty and conform to the applicable requirements of UL 464. Devices shall be connected into alarm indicating circuits and shall have a separate screw terminal for each conductor. Devices shall be the same color or color coordinated to the interior design colors of the interior of the building.

2.6.1 Alarm Horns

Horns shall be surface mounted, with the matching mounting back box recessed vibrating or electronic type suitable for use in an electrically supervised circuit. Horns shall produce a minimum sound rating of at least 115 dBA at 3.048 m. Horns used in exterior locations shall be specifically listed or approved for outdoor use and be provided with metal housing and protective grills.

2.6.2 Visual Notification Appliances

Visual notification appliances shall be listed to UL 1971, have high intensity optic lens and flash tubes. Strobes shall flash at approximately one flash per second and a minimum of 75 candela. Strobe shall be semiflush mounted.

2.6.3 Combination Audible/Visual Notification Appliances

Combination audible/visual notification appliances shall provide the same requirements as individual units except they shall mount as a unit in standard backboxes. All units shall be factory assembled. Any other audible indicating appliance employed in the fire alarm systems shall be approved by the authority having jurisdiction.

2.6.4 Rotating Beacon Light (Red)

Assembly shall be UL listed for mounting outdoors (weatherproof). Motor shall be rated heavy duty motor with a sealed gear train. Dome shall be shatter resistant.

2.7 REMOTE ANNUNCIATION EQUIPMENT

2.7.1 Remote LCD Annunciator

Annunciator shall indicate the location (room name and number) and the individual device in alarm or trouble as the Main Control Panel. Lock shall be operable using the same key as the control panel. Annunciator shall contain an audible trouble signal and a trouble switch to silence the audible alarm, but not extinguish the trouble indication. Annunciator shall be flush mounted.

2.8 FIRE DETECTION AND ALARM SYSTEM PERIPHERAL EQUIPMENT

2.8.1 Electromagnetic Door Hold-Open Devices

Devices shall be attached to the walls unless otherwise indicated. Devices shall comply with the appropriate requirements of UL 228. Devices shall operate on power from the fire alarm control panel or facility power supply. Compatible magnetic component shall be attached to the door. Under normal conditions, the magnets shall attract and hold the doors open. When magnets are de-energized, they shall release the doors. Magnets shall have a holding force of approximately 111.2 N. Devices shall be UL or FM approved. Housing for device shall be brushed aluminum. Operation shall be fail safe with no moving parts.

2.8.2 Conduit

Conduit and fittings shall comply with UL 6, UL 1242 and UL 797.

2.8.3 Wiring

Wiring for 120V ac power shall be No. 12 AWG minimum. Wiring for low voltage dc circuits shall be No. 14 AWG minimum. Power wiring (over 28 volts) and control wiring shall be isolated. All wiring shall conform to NFPA 70. System field wiring shall be solid copper and installed in metallic conduit or electrical metallic tubing, except rigid plastic conduit may be used under slab-on-grade. All conductors shall be color coded. Conductors used for the same functions shall be similarly color coded. Wiring code color shall remain uniform throughout the circuit. Pigtail or T-tap connections to alarm initiating, supervisory circuits, and alarm indicating circuits are prohibited. T-tapping using screw terminal blocks is allowed for addressable systems.

2.8.4 Special Tools and Spare Parts

Special tools necessary for the maintenance of the equipment shall be furnished. Two spare fuses of each type and size required and five spare lamps and LED's of each type shall be furnished. Two percent of the total number of each different type of detector, but no less than two each, shall be furnished.

PART 3 EXECUTION

3.1 INSTALLATION

All work shall be installed as shown and in accordance with the manufacturer's diagrams and recommendations, unless otherwise specified. Smoke detectors shall not be installed until the building has been thoroughly cleaned.

3.1.1 Power Supply for the System

A single dedicated circuit connection for supplying power to each building fire alarm system shall be provided. The primary power shall be supplied as shown on the drawings. The power supply shall be equipped with a locking mechanism and marked "FIRE ALARM CIRCUIT CONTROL."

3.1.2 Wiring

Conduit size for wiring shall be in accordance with NFPA 70. Wiring for the fire alarm system shall not be installed in conduits, junction boxes, or outlet boxes with conductors of lighting and power systems. No more than one conductor shall be installed under any screw terminal. All circuit conductors entering or leaving any mounting box, outlet box enclosure or cabinet shall be connected to screw terminals with each terminal marked in accordance with the wiring diagram. Connections and splices shall be made using screw terminal blocks. The use of wire nut type connectors are prohibited in the system. Wiring within any control equipment shall be readily accessible without removing any component parts. The fire alarm equipment manufacturer's representative shall be present for the connection of wiring to the control panel.

3.1.3 Control Panel

The control panel and its assorted components shall be mounted so that no part of the enclosing cabinet is less than 300 mm nor more than 2 m above the finished floor. All manually operable controls shall be between 900 mm to 1.1 m above the finished floor. Panel shall be installed to comply with the requirements of UL 864.

3.1.4 Detectors

Detectors shall be installed in accordance with NFPA 72. Detectors shall be at least 300 mm from any part of any lighting fixture. Detectors shall be located at least 900 mm from diffusers of air handling systems. Each detector shall be provided with appropriate mounting hardware as required by its mounting location. Detectors which mount in free space shall be mounted directly to the end of the stubbed down rigid conduit drop. Conduit drops shall be firmly secured to minimize detector sway. Where length of conduit drop from ceiling or wall surface exceeds 900 mm, sway bracing shall be provided.

3.1.5 Notification Appliances

Notification appliances shall be mounted a minimum of 2.4 m above the finished floor unless limited by ceiling height or otherwise indicated. Visual notification appliances in sleeping areas shall have an intensity of 110 candela.

3.1.6 Annunciator Equipment

Annunciator equipment provided shall be mounted where indicated.

3.2 OVERVOLTAGE AND SURGE PROTECTION

All equipment connected to alternating current circuits shall be protected from surges per IEEE C62.41 and NFPA 70. All cables and conductors which serve as communications links, except fiber optics, shall have surge protection circuits installed at each end. Fuses shall not be used for surge protection.

3.3 GROUNDING

Grounding shall be provided to building ground. Maximum impedance to ground shall be 25 ohms.

3.4 TESTING

The Contractor shall notify the Contracting Officer 30 days before the preliminary and acceptance tests are to be conducted. The tests shall be performed in accordance with the approved test procedures in the presence of the Contracting Officer. The control panel manufacturer's representative shall be present to supervise all tests. The Contractor shall furnish all instruments and personnel required for the tests.

3.4.1 Preliminary Tests

Upon completion of the installation, the system shall be subjected to functional and operational performance tests including tests of each installed initiating and notification appliance. Tests shall include the meggering of all system conductors to determine that the system is free from grounded, shorted, or open circuits. The megger test shall be conducted prior to the installation of fire alarm equipment. If deficiencies are found, corrections shall be made and the system shall be retested to assure that it is functional.

3.4.2 Acceptance Test

Testing shall be in accordance with NFPA 72. The recommended tests in NFPA 72 shall be considered mandatory and shall verify that all previous deficiencies have been corrected. The test shall include the following:

a. Test of each function of the control panel.

b. Test of each circuit in both trouble and normal modes.

c. Tests of alarm initiating devices in both normal and trouble conditions.

d. Tests of each control circuit and device.

e. Tests of each alarm notification appliance.

f. Tests of the battery charger and batteries.

g. Complete operational tests under emergency power supply.

h. Visual inspection of all wiring connections.

i. Opening the circuit at each alarm initiating device and notification appliance to test the wiring supervisory feature.

j. Ground fault

k. Short circuit faults

l. Stray voltage

m. Loop resistance

3.5 WARRANTY AND SERVICE

All fire alarm and detection systems, fire suppression systems, special hazard fire detection and suppression systems will come with a three-year warranty and an emergency recall service (respond within 60 minutes) for repair and service when notified.

3.6 TRAINING

Training course shall be provided for the operations and maintenance staff. The course shall be conducted in the building where the system is installed or as designated by the Contracting Officer. The training period shall consist of 3 training days (8 hours per day) and shall start after the system is functionally completed but prior to final acceptance tests. The instructions shall cover all of the items contained in the operating and maintenance instructions.

END OF SECTION

SECTION 13852

FIRE ALARM REPORTING SYSTEM, RADIO TYPE

PART 1 GENERAL

1.1 REFERENCES

The publications listed below form a part of this specification to the extent referenced. The publications are referred to in the text by basic designation only.

CODE OF FEDERAL REGULATIONS (CFR)

47 CFR 15	Radio Frequency Devices

INSTITUTE OF ELECTRICAL AND ELECTRONICS ENGINEERS (IEEE)

IEEE C62.41	(1991) Surge Voltages in Low-Voltage AC Power Circuits

NATIONAL ELECTRICAL MANUFACTURERS ASSOCIATION (NEMA)

NEMA ICS 1	(1993) Industrial Controls and Systems

NATIONAL FIRE PROTECTION ASSOCIATION (NFPA)

NFPA 70	(1999) National Electrical Code
NFPA 72	(1996) National Fire Alarm Code

UNDERWRITERS LABORATORIES (UL)

UL 6	(1993) Rigid Metal Conduit
UL 797	(1993) Electrical Metallic Tubing
UL 1242	(1983; Rev thru Jul 1993) Intermediate Metal Conduit

1.2 GENERAL REQUIREMENTS

1.2.1 Standard Products

Material and equipment shall be the standard products of a manufacturer regularly engaged in the manufacture of the products and shall essentially duplicate items that have been in satisfactory use for at least 2 years prior to bid opening. Equipment shall be supported by a service organization that can provide service within 24 hours.

1.2.2 Nameplates

Major components of equipment shall have the manufacturer's name, address, type or style, voltage and current rating, and catalog number on a noncorrosive and nonheat-sensitive plate which is securely attached to the equipment.

1.2.3 Tags

Tags with stamped identification numbers shall be furnished for keys and locks.

1.2.4 Keys and Locks

Locks shall be keyed alike.

1.2.5 Verification of Dimensions

The Contractor shall become familiar with all details of the work, verify all dimensions in the field, and shall advise the Contracting Officer of any discrepancy before performing the work.

1.2.6 Compliance

The central reporting system shall comply with NFPA 72. The equipment furnished shall be listed by Underwriters Laboratories, or Factory Mutual Engineering and Research, or be approved or listed by a nationally recognized testing laboratory.

1.3 SUBMITTALS

Government approval is required for submittals with a "GA" designation; submittals having an "FI0" designation are for information only. The following shall be submitted in accordance with Section 01330 SUBMITTAL PROCEDURES:

SD-01 Data

Battery; GA.

Substantiating battery calculations for supervisory and alarm power requirements. Ampere-hour requirements for each system component, each panel component and the battery recharging period shall be included.

Spare Parts; FIO.

Spare parts data for each different item of material and equipment specified, after approval of detail drawings, and not later than 1 month prior to the date of beneficial occupancy. Data shall include a complete list of parts and supplies with the current unit prices and source of supply and a list of the parts recommended by the manufacturer to be replaced after 1 year of service.

Qualifications; GA.

Qualifications, with verification of experience and license number, of a Registered Professional Engineer with at least 4 years of current experience in the design of fire protection and detection systems. This engineer must perform the various specification items required by this section to be performed by a Registered Professional Engineer.

SD-04 Drawings

Fire Alarm Reporting System; GA.

Detail drawings, signed by the Registered Professional Engineer, consisting of a complete list of equipment and material, including manufacturer's descriptive and technical literature, catalog cuts, and installation instructions. Note that the contract drawings shoe layouts based on typical detectors. The Contractor shall check the layout based on the actual detectors to be installed and make any necessary revisions in the detail drawings. Detail drawings shall also contain complete wiring and schematic diagrams for the equipment furnished, equipment layout, and any other details required to demonstrate that the system has been coordinated and will properly function as a unit.

Wiring Diagrams; GA.

Detail point-to-point wiring diagram, signed by the Registered Professional Engineer, showing all points of connection. Diagram shall include connections between system devices, appliances, control panels, supervised devices, an all equipment that is activated or controlled by the panel.

SD-06 Instructions

Fire Alarm Reporting System; GA.

Six complete copies of operating instructions outlining step-by-step procedures required for system startup, operation, and shutdown. The instructions shall include the manufacturer's name, model number, service manual, parts list, and brief description of all equipment and their basic operating features. Six copies of maintenance instructions listing routine maintenance procedures, possible breakdowns and repairs, and troubleshooting guide. The instructions shall include conduit layout, equipment layout and simplified wiring, and control diagrams of the system as installed. Instructions shall be approved prior to training.

Training; FIO.

Training course for the operations and maintenance staff. The course shall be conducted in the building where the system is installed or as designated by the Contracting Officer. The training period shall consist of 3 training days (8 hours per day) and shall start after the system is functionally completed but prior to

final acceptance tests. The instructions shall cover all of the items contained in the operating and maintenance instructions.

SD-08 Statements

Test Procedures; GA.

Detailed test procedures for the fire alarm reporting system 60 days prior to performing system tests. The test procedures shall be signed by the Registered Professional Engineer.

SD-09 Reports

Testing; GA.

Test reports in booklet form showing all field tests performed to prove compliance with the specified performance criteria, upon completion and testing of the installed system. Each test report shall document all readings, test results and indicate the final position of controls.

SD-13 Certificates

Equipment; FIO.

Certified copies of current applicable approvals or listings issued by UL, FM or other nationally recognized testing laboratory showing compliance with applicable NFPA standards.

1.4 DELIVERY AND STORAGE

All equipment delivered and placed in storage shall be protected from the weather, humidity and temperature variations, dirt, dust, and other contaminants.

1.5 SYSTEM OPERATION

The radio system shall report alarms to the radio fire alarm monitoring base station. The system shall be a completely supervised radio type fire alarm reporting system. The system shall indicate the area of alarm. The radio communication link shall be supervised and operated in accordance with NFPA 72.

1.6 ELECTRICAL SUPERVISION

Electrical supervision shall be provided for all circuits and for all positions of interface panel control switches.

PART 2 PRODUCTS

2.1 RADIO FIRE ALARM TRANSMITTER (TRANSCEIVER)

Radio fire alarm transmitter (transceiver) shall be compatible with the radio fire alarm monitoring base station. It shall be all solid state and comply with all applicable portions of 47 CFR 15 governing type acceptance. All transmitters of a common configuration shall be interchangeable with the other devices

furnished by the manufacturer. Each transmitter and interface device shall be the manufacturer's current commercial product completely assembled, wired, tested at the factory, and delivered ready for installation and operation.

2.1.1 Frequency Allocation

The transmitters shall operate on a frequency of 138.925 MHz.

2.1.2 Power Requirements

Transmitters shall be powered by a combination of locally available 120 Vac, and sealed nickel-cadium or lead-acid type batteries requiring no additional water. In the event of loss of 120 Vac power, the transmitter shall automatically switch to battery operation. The switchover shall be accomplished with no interruption of protective service, without adversely affecting the battery-powered capabilities, and shall cause the transmission of a trouble message in no less than 60 seconds. Upon restoration of ac power, transfer back to normal ac power supply shall be automatic and the battery shall be recharged. The converter/battery charger shall be installed within the transmitter housing. Power supply transient filtering shall be provided.

2.1.2.1 Battery Power

The battery package shall be capable of supplying all the power requirements for a given transmitter.

2.1.2.2 Battery Duration

Radio fire alarm transmitter standby battery capacity shall provide sufficient power to operate the transmitter in a normal standby status for a minimum of 60 hours and shall be capable of transmitting alarms during that period. The capacity for battery-only powered transmitters shall be 6 months before recharging is necessary.

2.1.2.3 Battery Supervision

Each radio fire alarm transmitter shall constantly monitor and supervise its own battery powered supply. A low-battery condition shall be reported when battery voltage falls below 85 percent of the rated voltage.

2.1.3 Functional Requirements

2.1.3.1 Interfacing Indicators and Controls

Transmitters shall incorporate the provisions for auxiliary interconnection to existing interior alarm systems.

2.1.3.2 Generation of Signals

Each transmitter shall be a standard design which allows the immediate transmission of all initiated signals.

2.1.3.3 Power Output

The radio frequency (RF) power output of each transmitter shall be sufficient for reliable alarm reporting. The minimum RF power output shall be 1 watt.

2.1.3.4 Memory

Transmitters shall have memory capability. Multiple, simultaneous alarms shall not result in the loss of any messages. All such messages shall be stored until they are transmitted.

2.1.3.5 Transmitter Identity Code

Each transmitter shall transmit a distinct identity code number as part of all signals emanating from the transmitter. The identity code shall allow for no less than a 10 digit code selection and be transmitted not less than three complete rounds (cycles).

2.1.3.6 Message Designations

Each transmitter shall allow as a minimum no less than ten distinct and individually identifiable message designations as to the types or causes of transmitter actuation.

a. Master Message: Master messages shall be transmitted upon automatic actuation of the transmitter. The building, device or group causing actuation shall be individually identified as part of this transmission.

b. Test Message: This message shall be capable of both manual and automatic actuation. When a transceiver method is employed, it shall provide for automatic interrogation at preselected periods or continuous automatic interrogation in accordance with the governing standard. Additionally, transceiver systems shall provide for selective interrogation at times determined by the user. Testing the automatic test actuation will occur a minimum of once in each 24-hour period, at an optionally preselected time. Stability of the electronic actuating device shall be plus or minus 1 minute per month within the temperature range stipulated for system operation. Actuation of the "Test" message designation, regardless of initiating means, shall cause no less than one complete message to be sent.

c. Tamper Message Designation: This message shall be automatically transmitted when a tamper switch is tripped in the transmitter housing.

d. Trouble Message Designation: This message shall be automatically transmitted in the event of a failure in excess of 1 minute of the main operating power source of the transmitter.

2.1.4 Transmitter Housings

The housings on transmitters shall be fabricated from corrosion-resistant cast metal or suitable substitute which has the physical strength sufficient to ward off physical damage normally expected to be received by vandalism. The housing shall be sealed against the entry of moisture, dust, dirt, insects, and other foreign objects. Exterior housings shall be NEMA 4X.

2.1.4.1 Lock

Internal components shall be protected from vandalism by a tamperproof lock on the transmitter housing. The housing shall allow access to all internal components for testing, servicing, and replacement at the installation site.

2.1.4.2 Mounting

Transmitter housings shall be designed for universal mounting on walls, poles, or pedestals. Mounting shall utilize either lag bolts, anchor bolts, stainless steel banding, mounting brackets, or a shackle/bolt combination, as applicable to the specific installation.

2.1.4.3 Operating Panel

Each publicly accessible transmitter shall have an operating panel that incorporates a dedicated signal initiating device (pull hook or push button) clearly identified for the initiation of "FIRE" signals. The device shall be protected with a conventional spring-loaded, "fast-action" break-glass, or similar pull-type door that allows observation of the actuation device when in the closed position. The door shall be fabricated and finished in a manner consistent with that required of the main housing.

2.1.5 Painting

Radio fire alarm transmitter and interface housings shall be factory painted. The finish color shall be Manufacturer Standard. All painted surfaces damaged during installation shall be repainted to match existing paint.

2.2 RADIO TRANSMITTER INTERFACE DEVICE

The interface device shall provide a means of converting whatever signals are available from the local control equipment into a form that is compatible with the transmitter inputs while still maintaining electrical supervision of the entire system. Interface devices shall be utilized whenever direct connection between local control equipment and the transmitter is not possible. Interface devices shall be completely assembled, wired, tested at the factory, and delivered ready for installation and operation.

2.2.1 Enclosure

When furnished as an independent self-contained device, the interface device shall be incorporated into an enclosure conforming to NEMA ICS 1 or other national standard as required by its location.

2.2.2 Indicators

Indicators shall be provided to indicate alarm and trouble conditions and shall consist of a red fire alarm and an amber trouble light. The indicators shall be designed to ensure visibility during daylight hours and to indicate the reporting zone.

2.2.3 Access

Switches and any other controls shall not be accessible without the use of a key. Access to controls shall be by unlocking and opening a panel or door.

2.2.4 Mounting

Interface housings shall be designed for universal mounting on walls, poles, or pedestals. Mounting shall utilize either lag bolts, anchor bolts, stainless steel banding, mounting brackets, or a shackle/bolt combination, as applicable to the specific installation.

2.2.5 Inputs/Outputs

Each interface panel shall provide as a minimum the number of alarm circuit inputs and outputs as indicated. Each input circuit shall be arranged so that the alarm signals shall override the trouble signals.

2.3 FIRE ALARM SYSTEM PERIPHERAL EQUIPMENT

2.3.1 Conduit

Conduit and fittings shall comply with UL 6, UL 1242, and UL 797.

2.3.2 Power Supply

The operating power for the system shall be single phase taken from the building electric service as specified in paragraph Power Supply for the System. Emergency backup power shall be provided by sealed lead-acid or nickel-calcium type batteries requiring no additional water. The charging system shall recharge fully discharged batteries within 12 hours and maintain the batteries in the fully charged state. The battery shall have the capacity to operate the system for not less than 48 hours under maximum normal load with the power supply to the charger disconnected.

2.3.3 Wiring

Wiring shall be in accordance with NFPA 70 and as indicated. All station wiring shall be color coded.

2.3.4 Special Tools and Spare Parts

Special tools necessary for the maintenance of the equipment shall be furnished. One spare set of fuses of each type and size required and five spare lamps of each type shall be furnished.

PART 3 EXECUTION

3.1 INSTALLATION

All work shall be installed as shown and in accordance with the manufacturer's recommendations, unless otherwise specified. All necessary interconnections, services, and adjustments required for a complete and operational system shall be provided. Electrical work shall be in accordance with NFPA 70.

3.1.1 Power Supply for the System

A single dedicated branch-circuit connection for supplying power to the fire alarm system shall be provided. The backup power supply shall be automatically energized upon failure of the normal power supply.

3.1.2 Wiring

Wiring for systems shall be installed in rigid conduit, intermediate metallic conduit, or electric metallic tubing. The conductors for the fire alarm system shall not be installed in conduits, junction boxes, or outlet boxes with conductors of lighting and power systems. The sum of the cross-sectional areas of individual conductors shall not exceed 40 percent of the interior cross-sectional area of the conduit. Conduit shall comply with NFPA 70. Ample gutter space to accommodate necessary wiring shall be provided.

3.2 OVERVOLTAGE AND SURGE PROTECTION

All equipment connected to alternating current circuits shall be protected from surges per IEEE C62.41 and NFPA 70. All cables and conductors which serve as communications links, except fiber optics, shall have surge protection circuits installed at each end. Fuses shall not be used for surge protection.

3.3 GROUNDING

Ground rods shall not protrude more than 150 mm above grade. Noncurrent- carrying metallic parts associated with radio fire alarm equipment shall have a maximum resistance to solid "earth" ground not to exceed 25 ohms.

3.4 TESTING

The Contractor shall notify the Contracting Officer 30 days before the performance and acceptance tests are to be conducted. The tests shall be performed in the presence of the Contracting Officer under the supervision of the fire alarm system manufacturer's qualified representative. The Contractor shall furnish all instruments and personnel required for the tests.

3.4.1 Performance Testing

Upon completion of the installation, the system shall be subjected to a complete functional and operational performance test by the Contractor. Test shall determine that the system is free from grounded, shorted, or open circuits. When all corrections have been made, the system shall be retested to assure that it is functional. Copies of performance test reports shall be submitted in accordance with paragraph SUBMITTALS.

3.4.2 Acceptance Test

The testing shall be in accordance with NFPA 72. The recommended tests in NFPA 72 shall be considered mandatory and shall verify that all previous deficiencies have been corrected. The tests shall include the following:

a. Tests to indicate there are no grounded, shorted, or open circuits.

b. Tests of each radio fire alarm transmitter/receiver/transceiver/ repeater.

c. Tests of radio fire alarm monitoring base station for all required functions.

d. Tests of normal and emergency power supplies.

3.4.3 Training

The Contractor shall conduct training course for operating staff in the building where the system is installed as designated by the Contracting Officer. The training period shall consist of 1 training day, 8 hours per day and shall start after the system is functionally completed but prior to the final acceptance tests. The field instructions shall cover all of the items contained in the approved operating and maintenance instructions.

END OF SECTION

SECTION 13930

WET PIPE SPRINKLER SYSTEM, FIRE PROTECTION

PART 1 GENERAL

1.1 REFERENCES

The publications listed below form a part of this specification to the extent referenced. The publications are referred to in the text by basic designation only.

AMERICAN SOCIETY FOR TESTING AND MATERIALS (ASTM)

ASTM A 47	(1990; R 1995) Ferritic Malleable Iron Castings
ASTM A 53	(1997) Pipe, Steel, Black and Hot-Dipped, Zinc-Coated, Welded and Seamless
ASTM A 135	(1997) Electric-Resistance-Welded Steel Pipe
ASTM A 183	(1983; R 1990) Carbon Steel Track Bolts and Nuts
ASTM A 536	(1984; R 1993) Ductile Iron Castings
ASTM A 795	(1996) Black and Hot-Dipped Zinc-Coated (Galvanized) Welded and Seamless Steel Pipe for Fire Protection Use
ASTM B 88	(1996) Seamless Copper Water Tube

AMERICAN SOCIETY OF MECHANICAL ENGINEERS (ASME)

ASME B16.1	(1989) Cast Iron Pipe Flanges and Flanged Fittings
ASME B16.3	(1992) Malleable Iron Threaded Fittings
ASME B16.4	(1992) Cast Iron Threaded Fittings
ASME B16.9	(1993) Factory-Made Wrought Steel Buttwelding Fittings
ASME B16.11	(1996) Forged Fittings, Socket-Welding and Threaded
ASME B16.18	(1984; R 1994) Cast Copper Alloy Solder Joint Pressure Fittings
ASME B16.21	(1992) Nonmetallic Flat Gaskets for Pipe Flanges
ASME B16.22	(1995) Wrought Copper and Copper Alloy Solder Joint Pressure Fittings

ASME B18.2.1	(1996) Square and Hex Bolts and Screws Inch Series
ASME B18.2.2	(1987; R 1993) Square and Hex Nuts (Inch Series)

AMERICAN SOCIETY OF SANITARY ENGINEERING (ASSE)

ASSE 1015	(1993) Double Check Backflow Prevention Assembly

AMERICAN WATER WORKS ASSOCIATION (AWWA)

AWWA-01	(1995) Standard Methods for the Examination of Water and Wastewater
AWWA B300	(1992) Hypochlorites
AWWA B301	(1992) Liquid Chlorine
AWWA ANSI/AWWA C104/A21.4	(1995) Cement-Mortar Lining for Ductile-Iron Pipe and Fittings for Water
AWWA ANSI/AWWA C110/A21.10	(1993) Ductile-Iron and Gray-Iron Fittings, 3 In. Through 48 In. (75 mm through 1200 mm), for Water and Other Liquids
AWWA ANSI/AWWA C111/A21.11	(1995) Rubber-Gasket Joints for Ductile-Iron Pressure Pipe and Fittings
AWWA ANSI/AWWA C151/A21.51	(1996) Ductile-Iron Pipe, Centrifugally Cast, for Water or Other Liquids
AWWA C203	(1991) Coal-Tar Protective Coatings and Linings for Steel Water Pipelines - Enamel and Tape - Hot-Applied
AWWA M20	(1973) Manual: Water Chlorination Principles and Practices

FACTORY MUTUAL ENGINEERING AND RESEARCH (FM)

FM P7825a	(1998) Approval Guide Fire Protection
FM P7825b	(1998) Approval Guide Electrical Equipment

MANUFACTURERS STANDARDIZATION SOCIETY OF THE VALVE AND FITTINGS INDUSTRY (MSS)

MSS SP-71	(1997) Cast Iron Swing Check Valves, Flanges and Threaded Ends

NATIONAL FIRE PROTECTION ASSOCIATION (NFPA)

NFPA 13	(1999; Errata 13-96-1) Installation of Sprinkler Systems

NFPA 13R	(1999) Installation of Sprinkler Systems in Residential Occupancies Up to and Including Four Stories in Height
NFPA 14	(1996) Installation of Standpipe and Hose Systems
NFPA 24	(1998) Installation of Private Fire Service Mains and Their Appurtenances
NFPA 230	(1999) Rack Storage of Materials
NFPA 1963	(1998) Fire Hose Connections

NATIONAL INSTITUTE FOR CERTIFICATION IN ENGINEERING TECHNOLOGIES (NICET)

NICET 1014	(1995) Program Detail Manual for Certification in the Field of Fire Protection Engineering Technology (Field Code 003) Subfield of Automatic Sprinkler System Layout

UNDERWRITERS LABORATORIES (UL)

UL 668	(1995) Hose Valves For Fire Protection Service
UL Bld Mat Dir	(1998) Building Materials Directory
UL Fire Prot Dir	(1998) Fire Protection Equipment Directory

1.2 GENERAL REQUIREMENTS

Wet pipe sprinkler system shall be provided in all areas of the building . The sprinkler system shall provide fire sprinkler protection for the entire area. Except as modified herein, the system shall be designed and installed in accordance with NFPA 13 and NFPA 13R. A dry standpipe system is required for the facility. Provide dry standpipe sprinkler piping and connections at each floor in stairwell with the hose connection pointing toward the stairway going upward. Locate Fire Department pumper connection next to sprinkler Fire Department connection. Rack sprinkler shall be in accordance with NFPA 230. Pipe sizes which are not indicated on drawings shall be determined by hydraulic calculation.

1.2.1 Hydraulic Design

The system shall be hydraulically designed to discharge the minimum densities as indicated on the drawings over the hydraulically most demanding design areas as indicated on the drawings. The minimum pipe size for branch lines in gridded systems shall be 32 mm (1-1/4 inch). Hydraulic calculations shall be in accordance with the Area/Density Method of NFPA 13.

1.2.1.2 Basis for Calculations

The design of the system shall be based upon a water supply with a static pressure of 379 kPa, and a flow of 3702 L/min at a residual pressure of 310 kPa. Water supply shall be presumed available at the point of connection to existing . Hydraulic calculations shall be based upon the Hazen-Williams

formula with a "C" value of 120 for steel piping, 150 for copper tubing, 140 for new cement-lined ductile-iron piping, and 100for existing underground piping.

1.2.2 Sprinkler Spacing

Sprinklers shall be uniformly spaced on branch lines. Maximum spacing per sprinkler shall not exceed limits specified in NFPA 13 for light and ordinary hazard classifications. Sprinkler hazard classifications shall be as indicated on the drawings.

1.3 SUBMITTALS

Government approval is required for submittals with a "GA" designation; submittals having an "FIO" designation are for information only. Submittals related to system configuration, hydraulic calculations, and equipment selection, including manufacturer's catalog data, working drawings, connection drawings, control diagrams and certificates shall be submitted concurrently as a complete package. The package will be reviewed by the U.S. Army Engineer District Fire Protection Engineer. The following shall be submitted in accordance with Section 01330 SUBMITTAL PROCEDURES:

SD-01 Data

Load Calculations for Sizing Sway Bracing

For systems that are required to be protected against damage from earthquakes, load calculations shall be provided for sizing of sway bracing.

Sprinkler System Equipment; GA.

Manufacturer's Catalog Data for each separate piece of equipment proposed for use in the system. Data shall indicate the name of the manufacturer of each item of equipment, with data highlighted to indicate model, size, options, etc. proposed for installation. In addition, a complete equipment list which includes equipment description, model number and quantity shall be provided.

Hydraulic Calculations; GA.

Hydraulic calculations, including a drawing showing hydraulic reference points and pipe segments.

Spare Parts;FIO.

Spare parts data shall be included for each different item of material and equipment specified. The data shall include a complete list of parts and supplies, with current unit prices and source of supply, and a list of parts recommended by the manufacturer to be replaced after 1 year and 3 years of service. A list of special tools and test equipment required for maintenance and testing of the products supplied by the Contractor shall be included.

SD-04 Drawings

Sprinkler System Shop Drawings; GA.

Detail drawings conforming to the requirements established for working plans as prescribed in NFPA 13. Drawings shall include plan and elevation views which establish that the equipment will fit the

allotted spaces with clearance for installation and maintenance. Each set of drawings shall include the following:

a. Descriptive index of drawings in the submittal with drawings listed in sequence by drawing number. A legend identifying device symbols, nomenclature, and conventions used.

b. Floor plans drawn to a scale not less than 1:100 which clearly show locations of sprinklers, risers, pipe hangers, seismic separation assemblies, sway bracing, inspector's test connections, drains, and other applicable details necessary to clearly describe the proposed arrangement. Each type of fitting used and the locations of bushings, reducing couplings, and welded joints shall be indicated.

c. Actual center-to-center dimensions between sprinklers on branch lines and between branch lines; from end sprinklers to adjacent walls; from walls to branch lines; from sprinkler feed mains, cross-mains and branch lines to finished floor and roof or ceiling. A detail shall show the dimension from the sprinkler and sprinkler deflector to the ceiling in finished areas.

d. Longitudinal and transverse building sections showing typical branch line and cross-main pipe routing as well as elevation of each typical sprinkler above finished floor.

e. Details of each type of riser assembly; pipe hanger; sway bracing for earthquake protection, and restraint of underground water main at point-of-entry into the building, and electrical devices and interconnecting wiring.

As-Built Drawings; FIO.

As-built drawings, no later than 14 working days after completion of the Final Tests. The sprinkler system shop drawings shall be updated to reflect as-built conditions after work is completed and shall be on reproducible full-size mylar film.

SD-06 Instructions

Test Procedures; GA.

Proposed test procedures for piping hydrostatic test, testing of alarms, at least 14 days prior to the start of related testing.

SD-07 Schedules

Preliminary Tests; GA.

A schedule of preliminary tests, at least 14 days prior to the proposed start of the tests.

Final Test; GA.

Upon successful completion of tests specified under paragraph PRELIMINARY TESTS, written notification shall be given to the Contracting Officer of the date for the final acceptance test. Notification shall be provided at least 14days prior to the proposed start of the test. Notification shall include a copy of the Contractor's Material & Test Certificates.

SD-08 Statements

Installer Qualifications; GA.

Qualifications of the sprinkler installer.

Submittal Preparer's Qualifications; GA.

The name and documentation of certification of the individual who will prepare the submittals, prior to the submittal of the drawings and hydraulic calculations.

SD-13 Certificates

Contractor's Material & Test Certificates;FIO.

Certificates, as specified in NFPA 13, shall be completed and signed by the Contractor's Representative performing required tests for both underground and aboveground piping.

SD-19 Operation and Maintenance Manuals

Sprinkler System;FIO.

Manuals shall be in loose-leaf binder format and grouped by technical sections consisting of manufacturer's standard brochures, schematics, printed instructions, general operating procedures, and safety precautions. The manuals shall list routine maintenance procedures possible breakdowns, and repairs, and troubleshooting guide. This shall include procedures and instructions pertaining to frequency of preventive maintenance, inspection, adjustment, lubrication and cleaning necessary to minimize corrective maintenance and repair.

1.4 HYDRAULIC CALCULATIONS

Hydraulic calculations shall be as outlined in NFPA 13 except that calculations shall be performed by computer using software specifically designed for fire protection system design. Software which uses k-factors for typical branch lines is not acceptable. Calculations shall be taken back to the water supply source unless water supply data is otherwise indicated. Calculations shall substantiate that the design area indicated is the hydraulically most demanding. Water supply curves and system requirements shall be plotted on semi-logarithmic graph paper so as to present a summary of the complete hydraulic calculation. A summary sheet listing sprinklers in the design area and their respective hydraulic reference points, elevations, actual discharge pressures and actual flows shall be provided. Elevations of hydraulic reference points (nodes) shall be indicated. Documentation shall identify each pipe individually and the nodes connected thereto. The diameter, length, flow, velocity, friction loss, number and type fittings, total friction loss in the pipe, equivalent pipe length and Hazen-Williams coefficient shall be indicated for each pipe. For gridded systems, calculations shall show peaking of demand area friction loss to verify that the hydraulically most demanding area is being used. Also for gridded systems, a flow diagram indicating the quantity and direction of flows shall be included. A drawing showing hydraulic reference points (nodes) and pipe designations used in the calculations shall be included and shall be independent of shop drawings.

1.5 SUBMITTAL PREPARER'S QUALIFICATIONS

The sprinkler system submittals, including as-built drawings, shall be prepared by an individual who is either a registered professional engineer or who is certified as a Level III Technician by National Institute for Certification in Engineering Technologies (NICET) in the Automatic Sprinkler System Layout subfield of Fire Protection Engineering Technology in accordance with NICET 1014.

1.6 INSTALLER QUALIFICATIONS

The installer shall be experienced and regularly engaged in the installation of the type and complexity of system included in this project. A statement prior to submittal of any other data or drawings, that the proposed sprinkler system installer is regularly engaged in the installation of the type and complexity of system included in this project shall be provided. In addition, data identifying the location of at least three systems recently installed by the proposed installer which are comparable to the system specified shall be submitted. Contractor shall certify that each system has performed satisfactorily, in the manner intended, for a period of not less than 6 months.

1.6.1 For installation of fire alarm detection systems, fire protection/suppression systems, and any of the components, the technician installing this equipment must be licensed in the State of Montana and hold the proper endorsement for such installation. The license and endorsements are as follows:

SAF=Fire Alarms
SEF=Extinquishing Systems
SAFS=Special Agent Fire Suppression System

A licensed journeyman electrician can install fire alarm systems and its components if the above endorsements are stamped on his license and he is factory trained, or NICET II certified and factory trained in the installation of the fire alarm devices being installed. The installer must be NICET II certified and licensed with the State of Montana licensing program to inspect, test, and certify the operational condition of the system. All licensees, endorsements and NICET certifications must be presented to the contracting officers and the fire prevention officers (341 CES/CEFT), along with the company name and name(s) of personnel installing the system before work is to begin.

1.6.2 All fire alarms, fire suppression, and special agent systems must be installed in accordance with IAW; the appropriate NFPA (National Fire Protection Association) Code 13, 13A 17, 17A, 24, 25, 72, 101; and any other code reference mentioned in contract specifications, manufacturer's recommendations and construction drawings. Current licenses, endorsements, and NICET certification must be on file with the Department of Commerce, Professional and Occupational Licensing Bureau, 11 North Jackson, P.P. Box 200513, Helena, MT 59620-0513.

1.6.3 All fire alarm and detection systems, fire suppression systems, special hazard fire detection and suppression systems will come with a 3-year warranty and an emergency recall service (respond within 1 hour) for repair and service when notified.

1.7 REGULATORY REQUIREMENTS

Compliance with referenced NFPA standards is mandatory. This includes advisory provisions listed in the appendices of such standards, as though the word "shall" had been substituted for the word "should" wherever it appears. Applicable material and installation standards referenced in Appendix A of NFPA 13 and NFPA 24 shall be considered mandatory the same as if such referenced standards were specifically listed in this specification. In the event of a conflict between specific provisions of this specification and applicable NFPA standards, this specification shall govern. All requirements that

exceed the minimum requirements of NFPA 13 shall be incorporated into the design. Reference to "authority having jurisdiction" shall be interpreted to mean the Contracting Officer.

1.8 DELIVERY AND STORAGE

Equipment placed in storage shall be stored with protection from the weather, humidity and temperature variations, dirt and dust or other contaminants.

PART 2 PRODUCTS

2.1 GENERAL EQUIPMENT REQUIREMENTS

2.1.1 Standard Products

Materials and equipment shall be standard products of a manufacturer regularly engaged in the manufacture of such products and shall essentially duplicate items that have been in satisfactory use for at least 2 years prior to bid opening.

2.1.2 Requirements for Fire Protection Service

Equipment and materials shall have been tested by Underwriters Laboratories, Inc. and listed in UL Fire Prot Dir or approved by Factory Mutual and listed in FM P7825a and FM P7825b. Where the terms "listed" or "approved" appear in this specification, such shall mean listed in UL Fire Prot Dir or FM P7825a and FM P7825b

2.1.3 Nameplates

Major components of equipment shall have the manufacturer's name, address, type or style, model or serial number, and catalog number on a plate permanently affixed to the item of equipment.

2.2 UNDERGROUND PIPING SYSTEMS

2.2.1 Pipe

Piping from a point 150 mm above the floor to a point 1500 mm outside the building wall shall be ductile iron with a rated working pressure of 1034kPa (150psi) conforming to AWWA C151, with cement mortar lining conforming to AWWA C104. Piping more than 1500 mm outside the building walls shall comply with Section 02660 WATER DISTRIBUTION SYSTEM.

2.2.2 Fittings and Gaskets

Fittings shall be ductile iron conforming to AWWA C110. Gaskets shall be suitable in design and size for the pipe with which such gaskets are to be used. Gaskets for ductile iron pipe joints shall conform to AWWA C111.

2.2.3 Gate Valve and Indicator Posts

Gate valves for underground installation shall be of the inside screw type with counter-clockwise rotation to open. Where indicating type valves are shown or required, indicating valves shall be gate valves with an approved indicator post of a length to permit the top of the post to be located 900 mm

above finished grade. Gate valves and indicator posts shall be listed in UL Fire Prot Dir or FM P7825a and FM P7825b.

2.3 ABOVEGROUND PIPING SYSTEMS

Aboveground piping shall be steel or copper.

2.3.1 Steel Piping System

2.3.1.1 Steel Pipe

Except as modified herein, steel pipe shall be blackas permitted by NFPA 13 and shall conform to applicable provisions of ASTM A 795, ASTM A 53, or ASTM A 135. Pipe in which threads or grooves are cut shall be Schedule 40 or shall be listed by Underwriters' Laboratories to have a corrosion resistance ratio (CRR) of 1.0 or greater after threads or grooves are cut. Pipe shall be marked with the name of the manufacturer, kind of pipe, and ASTM designation.

2.3.1.2 Fittings for Non-Grooved Steel Pipe

Fittings shall be cast iron conforming to ASME B16.4, steel conforming to ASME B16.9 or ASME B16.11, or malleable iron conforming to ASME B16.3. Fittings into which sprinklers, drop nipples or riser nipples (sprigs) are screwed shall be threaded type. Plain-end fittings with mechanical couplings, fittings which use steel gripping devices to bite into the pipe and segmented welded fittings shall not be used.

2.3.1.3 Grooved Mechanical Joints and Fittings

Joints and fittings shall be designed for not less than 1200 kPa (175 psi) service and shall be the product of the same manufacturer. Fitting and coupling houses shall be malleable iron conforming to ASTM A 47, Grade 32510; ductile iron conforming to ASTM A 536, Grade 65-45-12. Gasket shall be the flush type that fills the entire cavity between the fitting and the pipe. Nuts and bolts shall be heat-treated steel conforming to ASTM A 183 and shall be cadmium plated or zinc electroplated.

2.3.1.4 Flanges

Flanges shall conform to NFPA 13 and ASME B16.1. Gaskets shall be non-asbestos compressed material in accordance with ASME B16.21, 1.6 mm (1/16 inch) thick, and full face or self-centering flat ring type. Bolts shall be squarehead conforming to ASME B18.2.1 and nuts shall be hexagon type conforming to ASME B18.2.2.

2.3.2 Copper Tube Systems

2.3.2.1 Copper Tube

Copper tube shall conform to ASTM B 88, Types L and M.

2.3.2.2 Copper Fittings

Cast copper alloy pressure fittings shall conform to ASME B16.18 and wrought copper and bronze pressure fittings shall conform to ASME B16.22.

2.3.4 Pipe Hangers

Hangers shall be listed in UL Fire Prot Dir or FM P7825a and FM P7825b and of the type suitable for the application, construction, and pipe type and sized involved.

2.3.5 Valves

2.3.5.1 Control Valve and Gate Valve

Manually operated sprinkler control valve and gate valve shall be outside stem and yoke (OS&Y) type and shall be listed in UL Bld Mat Dir or FM P7825a and FM P7825b.

2.3.5.2 Check Valve

Check valve 50 mm (2 inches) and larger shall be listed in UL Bld Mat Dir or FM P7825a and FM P7825b. Check valves 100 mm (4 inches) and larger shall be of the swing type with flanged cast iron body and flanged inspection plates, shall have a clear waterway and shall meet the requirements of MSS SP-71, for Type 3 or 4.

2.3.5.3 Hose Valve

Valve shall comply with UL 668 and shall have a minimum rating of 2070 kPa (300 psi). Valve shall be non-rising stem, all bronze, 90 degree angle type, with 65 mm (2-1/2 inch) American National Standard Fire Hose Screw Thread (NH) male outlet in accordance with NFPA 1963. Hose valve shall be provided with 65 to 40 mm (2-1/2 to 1-1/2 inch) reducer. Hose valves shall be equipped with lugged cap with drip drain, cap gasket and chain. Valve finish shall be polished brass.

2.4 ALARM CHECK VALVE ASSEMBLY

Assembly shall include an alarm check valve, standard trim piping, pressure gauges, bypass, retarding chamber, testing valves, main drain, and other components as required for a fully operational system.

2.5 WATER MOTOR ALARM ASSEMBLY

Assembly shall include a body housing, impeller or pelton wheel, drive shaft, striker assembly, gong, wall plate and related components necessary for complete operation. Minimum 20 mm (3/4 inch) galvanized piping shall be provided between the housing and the alarm check valve. Drain piping from the body housing shall be minimum 25 mm (1 inch) galvanized and shall be arranged to drain to the outside of the building. Piping shall be galvanized both on the inside and outside surfaces.

2.6 ALARM INITIATING AND SUPERVISORY DEVICES

2.6.1 Sprinkler Waterflow Indicator Switch, Vane Type

Switch shall be vane type with a pipe saddle and cast aluminum housing. The electro-mechanical device shall include a flexible, low-density polyethylene paddle conforming to the inside diameter of the fire protection pipe. The device shall sense water movements and be capable of detecting a sustained flow of 38 L/min (10 gpm) or greater. The device shall contain a retard device adjustable from 0 to 90 seconds to reduce the possibility of false alarms caused by transient flow surges. The switch shall include two SPDT (Form C) contacts, and shall be equipped with a silicone rubber gasket

to assure positive water seal and a dustproof cover and gasket to seal the mechanism from dirt and moisture.

2.6.3 Valve Supervisory (Tamper) Switch

Switch shall be suitable for mounting to the type of control valve to be supervised open. The switch shall be tamper resistant and contain one set of SPDT (Form C) contacts arranged to transfer upon removal of the housing cover or closure of the valve of more than two rotations of the valve stem.

2.7 FIRE DEPARTMENT CONNECTION

Fire department connection shall be projectingtype with cast brass body, matching wall escutcheon lettered "Auto Spkr" with a polished brass finish. The connection shall have two inlets with individual self-closing clappers, caps with drip drains and chains. Female inlets shall have 65 mm (2-1/2 inch) diameter American National Fire Hose Connection Screw Threads (NH) per NFPA 1963.

2.8 SPRINKLERS

Sprinklers shall be used in accordance with their listed spacing limitations. In all corridors, provide flush-mounted sprinkler heads. Temperature classification shall be ordinary. Sprinklers in high heat areas including attic spaces or in close proximity to unit heaters shall have temperature classification in accordance with NFPA 13. Sprinklers with internal O-rings shall not be used.

2.8.1 Upright Sprinkler

Upright sprinkler shall be quick-response type and shall have a nominal 12.7 mm (1/2 inch) or 13.5 mm (17/32 inch) orifice.

2.8.2 Pendent Sprinkler

Pendent sprinkler shall be of the fusible strut or glass bulb type, quick-response type with nominal 12.7 mm (1/2 inch) [or 13.5 mm (17/32 inch)] orifice. Pendent sprinklers shall have a white enamel finish.

2.8.4 Residential Sprinkler

Residential sprinkler shall be the pendent type with nominal 12.7 mm (1/2 inch) orifice. Residential sprinkler shall have a white enamel finish.

2.9 DISINFECTING MATERIALS

2.9.1 Liquid Chlorine

Liquid chlorine shall conform to AWWA B301.

2.9.2 Hypochlorites

Calcium hypochlorite and sodium hypochlorite shall conform to AWWA B300.

2.10 ACCESSORIES

2.10.1 Sprinkler Cabinet

Spare sprinklers shall be provided in accordance with NFPA 13 and shall be packed in a suitable metal or plastic cabinet. Spare sprinklers shall be representative of, and in proportion to, the number of each type and temperature rating of the sprinklers installed. At least one wrench of each type required shall be provided.

2.10.2 Pendent Sprinkler Escutcheon

Escutcheon shall be one-piece metallic type with a depth of less than 20 mm and suitable for installation on pendent sprinklers. The escutcheon shall have a factory finish that matches the pendent sprinkler heads.

2.10.3 Pipe Escutcheon

Escutcheon shall be polished chromium-plated zinc alloy, or polished chromium-plated copper alloy. Escutcheons shall be either one-piece or split-pattern, held in place by internal spring tension or set screw.

2.10.5 Identification Sign

Valve identification sign shall be minimum 150 mm wide x 50 mm high with enamel baked finish on minimum 1.214 mm (18 gauge) steel or 0.6 mm (0.024 inch) aluminum with red letters on a white background or white letters on red background. Wording of sign shall include, but not be limited to "main drain," "auxiliary drain," "inspector's test," "alarm test," "alarm line," and similar wording as required to identify operational components.

2.12 DOUBLE-CHECK VALVE BACKFLOW PREVENTION ASSEMBLY

Double-check backflow prevention assembly shall comply with ASSE 1015. The assembly shall have a bronze, cast-iron or stainless steel body with flanged ends. The assembly shall include OS&Y shutoff valves on the inlet and outlet, 2-positive-seating check valve for continuous pressure application, and four test cocks. Assemblies shall be rated for working pressure of 1034kPa (150psi). The maximum pressure loss shall be 40 kPa at a flow rate equal to the sprinkler water demand, at the location of the assembly.

PART 3 EXECUTION

3.1 INSTALLATION REQUIREMENTS

The installation shall be in accordance with the applicable provisions of NFPA 13, NFPA 24 and publications referenced therein. Installation of in-rack sprinklers shall comply with applicable provisions of NFPA 231C.

3.2 ABOVEGROUND PIPING INSTALLATION

Piping shall be run straight and bear evenly on hangers and supports.

3.2.1 Protection of Piping Against Earthquake Damage

The system piping shall be protected against damage from earthquakes. This facility shall be designed as being in Seismic Zone 2B. Seismic protection of the piping system shall be provided in accordance with NFPA 13 and Appendix A, with the exception that the "Earthquake Zones" map of Appendix A shall not apply to this project. Seismic protection shall include flexible couplings, sway bracing, seismic separation assemblies where piping crosses building seismic separation joints, and other features as required in NFPA 13 for protection of piping against damage from earthquakes. Branch lines shall be equipped with sway braces at the end sprinkler head and at intervals not exceeding 9 m.

3.2.2 Piping in Exposed Areas

Exposed piping shall be installed so as not to diminish exit access widths, corridors or equipment access. Exposed horizontal piping, including drain piping, shall be installed to provide maximum headroom.

3.2.3 Piping in Finished Areas

In areas with suspended or dropped ceilings and in areas with concealed spaces above the ceiling, piping shall be concealed above ceilings. Piping shall be inspected, tested and approved before being concealed. Risers and similar vertical runs of piping in finished areas shall be concealed.

3.2.4 Pendent Sprinklers

Drop nipples to pendent sprinklers shall consist of minimum 25 mm (1 inch) pipe with a reducing coupling into which the sprinkler shall be threaded. Hangers shall be provided on arm-overs to drop nipples supplying pendent sprinklers when the arm-over exceeds 300 mm. Where sprinklers are installed below suspended or dropped ceilings, drop nipples shall be cut such that sprinkler ceiling plates or escutcheons are of a uniform depth throughout the finished space. The outlet of the reducing coupling shall not extend more than 25 mm below the underside of the ceiling. On pendent sprinklers installed below suspended or dropped ceilings, the distance from the sprinkler deflector to the underside of the ceiling shall not exceed 100 mm. Recessed pendent sprinklers shall be installed such that the distance from the sprinkler deflector to the underside of the ceiling shall not exceed the manufacturer's listed range and shall be of uniform depth throughout the finished area.

3.2.4.1 Pendent Sprinkler Locations

Pendent sprinklers in suspended ceilings shall be a minimum of 150 mm from ceiling grid.

3.2.5 Upright Sprinklers

Riser nipples or "sprigs" to upright sprinklers shall contain no fittings between the branch line tee and the reducing coupling at the sprinkler. Riser nipples exceeding 750 mm in length shall be individually supported.

3.2.6 Pipe Joints

Pipe joints shall conform to NFPA 13, except as modified herein. Not more than four threads shall show after joint is made up. Welded joints will be permitted, only if welding operations are performed as required by NFPA 13 at the Contractor's fabrication shop, not at the project construction site. Flanged joints shall be provided where indicated or required by NFPA 13. Grooved pipe and fittings

shall be prepared in accordance with the manufacturer's latest published specification according to pipe material, wall thickness and size. Grooved couplings and fittings shall be from the same manufacturer.

3.2.7 Reducers

Reductions in pipe sizes shall be made with one-piece tapered reducing fittings. The use of grooved-end or rubber-gasketed reducing couplings will not be permitted. When standard fittings of the required size are not manufactured, single bushings of the face type will be permitted. Where used, face bushings shall be installed with the outer face flush with the face of the fitting opening being reduced. Bushings shall not be used in elbow fittings, in more than one outlet of a tee, in more than two outlets of a cross, or where the reduction in size is less than 15 mm (1/2 inch).

3.2.8 Pipe Penetrations

Cutting structural members for passage of pipes or for pipe-hanger fastenings will not be permitted. Pipes that must penetrate concrete or masonry walls or concrete floors shall be core-drilled and provided with pipe sleeves. Each sleeve shall be Schedule 40 galvanized steel, ductile iron or cast iron pipe and shall extend through its respective wall or floor and be cut flush with each wall surface. Sleeves shall provide required clearance between the pipe and the sleeve per NFPA 13. The space between the sleeve and the pipe shall be firmly packed with mineral wool insulation. Where pipes pass through fire walls, fire partitions, or floors, a fire seal shall be placed between the pipe and sleeve in accordance with Section 07270 FIRESTOPPING. In penetrations which are not fire-rated or not a floor penetration, the space between the sleeve and the pipe shall be sealed at both ends with plastic waterproof cement which will dry to a firm but pliable mass or with a mechanically adjustable segmented elastomer seal.

3.2.9 Escutcheons

Escutcheons shall be provided for pipe penetration of ceilings and walls. Escutcheons shall be securely fastened to the pipe at surfaces through which piping passes.

3.2.10 Inspector's Test Connection

Unless otherwise indicated, test connection shall consist of 25 mm (1 inch) pipe connected to the remote branch line; a test valve located approximately 2 meters above the floor; a smooth bore brass outlet equivalent to the smallest orifice sprinkler used in the system; and a painted metal identification sign affixed to the valve with the words "Inspector's Test." The discharge orifice shall be located outside the building wall directed so as not to cause damage to adjacent construction or landscaping during full flow discharge.

3.2.11 Drains

Main drain piping shall be provided to discharge [at a safe point outside the building] [at the location indicated]. Auxiliary drains shall be provided as required by NFPA 13 except that drain valves shall be used where drain plugs are otherwise permitted. Where branch lines terminate at low points and form trapped sections, such branch lines shall be manifolded to a common drain line.

3.2.12 Installation of Fire Department Connection

Connection shall be mounted on the exterior wall approximately 900 mm above finished grade. The piping between the connection and the check valve shall be provided with an automatic drip in accordance with NFPA 13 and arranged to drain to the outside.

3.2.13 Identification Signs

Signs shall be affixed to each control valve, inspector test valve, main drain, auxiliary drain, test valve, and similar valves as appropriate or as required by NFPA 13. Hydraulic design data nameplates shall be permanently affixed to each sprinkler riser as specified in NFPA 13.

3.3 UNDERGROUND PIPING INSTALLATION

The fire protection water main shall be laid, and joints anchored, in accordance with NFPA 24. Minimum depth of cover shall be 900 mm (3 feet). The supply line shall terminate inside the building with a flanged piece, the bottom of which shall be set not less than 150 mm above the finished floor. A blind flange shall be installed temporarily on top of the flanged piece to prevent the entrance of foreign matter into the supply line. A concrete thrust block shall be provided at the elbow where the pipe turns up toward the floor. In addition, joints shall be anchored in accordance with NFPA 24 using pipe clamps and steel rods from the elbow to the flange above the floor and from the elbow to a pipe clamp in the horizontal run of pipe. Buried steel components shall be provided with a corrosion protective coating in accordance with AWWA C203. Piping more than 1500 mm outside the building walls shall meet the requirements of Section 02660 WATER DISTRIBUTION SYSTEM.

3.4 EARTHWORK

Earthwork shall be performed in accordance with applicable provisions of Section 02315 EXCAVATION, FILLING AND BACKFILLING FOR BUILDINGS.

3.5 ELECTRICAL WORK

Alarm signal wiring connected to the building fire alarm control system shall be in accordance with Section 13851 FIRE DETECTION AND ALARM SYSTEM. All wiring for supervisory and alarm circuits shall be #16 AWG solid copper installed in metallic tubing or conduit. Wiring color code shall remain uniform throughout the system.

3.6 DISINFECTION

After all system components are installed and hydrostatic test are successfully completed, each portion of the sprinkler system to be disinfected shall be thoroughly flushed with potable water until all entrained dirt and other foreign materials have been removed before introducing chlorinating material. Flushing shall be conducted by removing the flushing fitting of the cross mains and of the grid branch lines, and then back-flushing through the sprinkler main drains. The chlorinating material shall be hypochlorites or liquid chlorine. Water chlorination procedure shall be in accordance with AWWA M20. The chlorinating material shall be fed into the sprinkler piping at a constant rate of 50 parts per million (ppm). A properly adjusted hypochlorite solution injected into the system with a hypochlorinator, or liquid chlorine injected into the system through a solution-fed chlorinator and booster pump shall be used. Chlorination application shall continue until the entire system if filled. The water shall remain in the system for a minimum of 24 hours. Each valve in the system shall be opened and closed several times to ensure its proper disinfection. Following the 24-hour period, no

less than 25 ppm chlorine residual shall remain in the system. The system shall then be flushed with clean water until the residual chlorine is reduced to less than one part per million. Samples of water in properly disinfected containers for bacterial examination will be taken from several system locations which are approved by the Contracting Officer. Samples shall be tested for total coliform organisms (coliform bacteria, fecal coliform, streptococcal, and other bacteria) in accordance with AWWA-01. The testing method shall be either the multiple-tube fermentation technique or the membrane-filter technique. The disinfection shall be repeated until tests indicate the absence of coliform organisms (zero mean coliform density per 100 milliliters) in the samples for at least 2 full days. The system will not be accepted until satisfactory bacteriological results have been obtained.

3.7 FIELD PAINTING AND FINISHING

Field painting and finishing are specified in Section 09900 PAINTING, GENERAL.

3.8 PRELIMINARY TESTS

The system, including the underground water mains, and the aboveground piping and system components, shall be tested to assure that equipment and components function as intended. The underground and aboveground interior piping systems and attached appurtenances subjected to system working pressure shall be tested in accordance with NFPA 13 and NFPA 24. Upon completion of specified tests, the Contractor shall complete certificates as specified in paragraph SUBMITTALS.

3.8.1 Underground Piping

3.8.1.1 Flushing

Underground piping shall be flushed in accordance with NFPA 24. This includes the requirement to flush the lead-in connection to the fire protection system at a flow rate not less that the calculated maximum water demand rate of the system.

3.8.1.2 Hydrostatic Testing

New underground piping shall be hydrostatically tested in accordance with NFPA 24. The allowable leakage shall be measured at the specified test pressure by pumping from a calibrated container. The amount of leakage at the joints shall not exceed 1.89 liters (2 quarts) per hour per 100 gaskets or joints, regardless of pipe diameter.

3.8.2 Aboveground Piping

3.8.2.1 Hydrostatic Testing

Aboveground piping shall be hydrostatically tested in accordance with NFPA 13 at not less than 1400 kPa or 350 kPa in excess of maximum system operating pressure and shall maintain that pressure without loss for 2 hours. There shall be no drop in gauge pressure or visible leakage when the system is subjected to the hydrostatic test. The test pressure shall be read from a gauge located at the low elevation point of the system or portion being tested.

3.8.3 Testing of Alarm Devices

Each alarm switch shall be tested by flowing water through the inspector's test connection. Each water-operated alarm devices shall be tested to verify proper operation.

3.8.4 Main Drain Flow Test

Following flushing of the underground piping, a main drain test shall be made to verify the adequacy of the water supply. Static and residual pressures shall be recorded on the certificate specified in paragraph SUBMITTALS. In addition, a main drain test shall be conducted each time after a main control valve is shut and opened.

3.9 FINAL ACCEPTANCE TEST

A technician employed by the installing Contractor shall be present for the final tests and shall provide a complete demonstration of the operation of the system. This shall include operation of control valves and flowing of inspector's test connections to verify operation of associated waterflow alarm switches. After operation of control valves has been completed, the main drain test shall be repeated to assure that control valves are in the open position. In addition, the representative shall have available copies of as-built drawings and certificates of tests previously conducted. The installation shall not be considered accepted until identified discrepancies have been corrected and test documentation is properly completed and received.

END OF SECTION

This page intentionally blank

SECTION 15070

SEISMIC PROTECTION FOR MECHANICAL EQUIPMENT

PART 1 GENERAL

1.1 REFERENCES

The publications listed below form a part of this specification to the extent referenced. The publications are referred to in the text by basic designation only.

COE TECHNICAL INSTRUCTIONS (TI)

TI 809-04	(1998) Seismic Design for Buildings

SHEET METAL & AIR CONDITIONING CONTRACTORS' NATIONAL ASSOCIATION (SMACNA)

SMACNA Seismic Restraint Mnl	(1991; Appx E, 1993) Seismic Restraint Manual Guidelines for Mechanical Systems

1.2 SYSTEM DESCRIPTION

1.2.1 General Requirements

The requirements for seismic protection measures described in this section shall be applied to the mechanical equipment and systems listed below. Structural requirements shall be in accordance with Section 13080 SEISMIC PROTECTION FOR MISCELLANEOUS EQUIPMENT.

1.2.2 Mechanical Equipment

Mechanical equipment to be seismically protected shall include the following items to the extent required on the drawings or in other sections of these specifications:

Boilers and furnaces	Storage Tanks for Water
Water Heaters	Steam, Water, and Gas Piping
Expansion Air Separator Tanks	Valves and Fittings for Piping
Heat Exchangers	Air and Refrigerant Compressors
Water Chiller Units	Air Handling Units
Refrigerant Piping	Ducts
Pumps with Motors	Unit Heaters
Suspended Ceiling Assemblies	Exhaust and Return Fans
Accumulator Tank	

1.2.3 Mechanical Systems

The following mechanical systems shall be installed as required on the drawings and other sections of these specifications and shall be seismically protected in accordance with this specification:

All Piping Inside the Building Except as Specifically Stated Below Under "Items Not Covered By This Section".
Chilled Water Distribution Systems Outside of Buildings
Gas Distribution Systems
All Water Supply Systems
Storm and Sanitary Sewer Systems
All Process Piping

1.2.4 Omitted

1.2.5 Items Not Covered By This Section

1.2.5.1 Fire Protection Systems

Seismic protection of piping for fire protection systems shall be installed as specified in Section 13930 WET PIPE SPRINKLER SYSTEM. However, the design seismic loadings for these items shall not be less than loadings obtained using the procedures in TI 809-04.

1.2.5.2 Items Requiring No Seismic Restraints

Seismic restraints are not required for the following items:

a. Gas piping less than 25 mm (1 inch) inside diameter.

b. Piping in boiler and mechanical equipment rooms less than 32 mm (1-1/4) inches inside diameter.

c. All other piping less than 64 mm (2-1/2inches) inside diameter.

d. Rectangular air handling ducts less than 0.56 square meters (6 square feet) in cross sectional area.

e. Round air handling ducts less than 711 mm (28 inches) in diameter.

f. Piping suspended by individual hangers 300 mm (12 inches) or less in length from the top of pipe to the bottom of the supporting structural member where the hanger is attached, except as noted below.

g. Ducts suspended by hangers 300 mm (12 inches) or less in length from the top of the duct to the bottom of the supporting structural member, except as noted below.

In exemptions f. and g. all hangers shall meet the length requirements. If the length requirement is exceeded by one hanger in the run, the entire run shall be braced. Interior piping and ducts not listed above shall be seismically protected in accordance with the provisions of this specification.

1.3 SUBMITTALS

Government approval is required for submittals with a "GA" designation; submittals having an "FIO" designation are for information only. The following shall be submitted in accordance with Section 01330 SUBMITTAL PROCEDURES:

SD-01 Data

Coupling and Bracing; GA. Equipment Requirements; GA.

Copies of the design calculations with the detail drawings. Calculations shall be stamped by a registered engineer and shall verify the capability of structural members to which bracing is attached for carrying the load from the brace.

SD-04 Drawings

Coupling and Bracing; GA. Flexible Couplings or Joints; GA. Equipment Requirements; GA.

Detail drawings along with catalog cuts, templates, and erection and installation details, as appropriate, for the items listed. Submittals shall be complete in detail; shall indicate thickness, type, grade, class of metal, and dimensions; and shall show construction details, reinforcement, anchorage, and installation with relation to the building construction.

SD-13 Certificates

Flexible Ball Joints; FIO.

Flexible ball joints shall be certified to be suitable for the service intended by the manufacturer. Information verifying experience at not less than 3 locations of 2 years' satisfactory operation in a similar application shall be submitted.

PART 2 PRODUCTS

2.1 FLEXIBLE COUPLINGS

Flexible couplings shall have same pressure and temperature ratings as adjoining pipe.

2.2 FLEXIBLE BALL JOINTS

Flexible ball joints shall have cast or wrought steel casing and ball parts capable of 360-degree rotation with not less than 15-degree angular movement.

2.3 FLEXIBLE MECHANICAL JOINTS

a. Mechanical couplings for steel or cast iron pipe shall be of the sleeve type and shall provide a tight flexible joint under all reasonable conditions, such as pipe movement caused by expansion, contraction, slight settling or shifting of the ground, minor variations in trench gradients, and traffic vibrations. Where permitted in other sections of these specifications, joints utilizing split-half couplings with grooved or shouldered pipe ends may be used.

b. Sleeve-type couplings shall be used for joining plain-end pipe sections. The coupling shall consist of one steel middle ring, two steel followers, two gaskets, and necessary steel bolts and nuts to compress the gaskets.

2.4 MANUFACTURED BALL JOINTS

Manufactured ball joints shall be as recommended by the manufacturer for the intended use, and shall be approved by the Contracting Officer before installation.

2.5 SWAY BRACING MATERIALS

Sway bracing materials shall be structural steel conforming with the following:

a. Plates, rods, and rolled shapes, ASTM A 36.

b. Wire rope, ASTM A 603.

c. Tubes, ASTM A 500, Grade B.

d. Pipes, ASTM A 53, Type E or S, Grade B.

e. Light gauge angles, less than 6 mm (1/4 inch) thickness, ASTM A 653.

PART 3 EXECUTION

3.1 COUPLING AND BRACING

Coupling installation shall conform to the details shown on the drawings. Provisions of this paragraph apply to all piping within a 1.5 m (5 foot) line around outside of building unless buried in the ground. Piping grouped for support on trapeze-type hangers shall be braced at the same intervals as determined by the smallest diameter pipe of the group. Bracing rigidly attached to pipe flanges, or similar, shall not be used where it would interfere with thermal expansion of piping.

3.2 BUILDING DRIFT

Joints capable of accommodating seismic displacements shall be provided for vertical piping between floors of the building, where pipes pass through a building seismic or expansion joint, or where rigidly supported pipes connect to equipment with vibration isolators. Horizontal piping across expansion joints shall accommodate the resultant of the drifts of each building unit in each orthogonal direction. For threaded piping, swing joints made of the same piping material shall be provided. For piping with manufactured ball joints the seismic drift shall be 0.015 meters per meter (.049 feet per foot) of height above the base where the seismic separation occurs; this drift value shall be used in place of the expansion given in the manufacturer's selection table.

3.3 FLEXIBLE COUPLINGS OR JOINTS

3.3.1 Building Piping

Flexible couplings or joints in building piping shall be provided at bottom of all pipe risers for pipe larger than 90 mm (3-1/2 inches) in diameter. Flexible couplings or joints shall be braced laterally without interfering with the action of the flexible coupling or joint. Cast iron waste and vent piping need only comply with these provisions when caulked joints are used. Flexible bell and spigot pipe joints using rubber gaskets or no-hub fittings may be used at each branch adjacent to tees and elbows for underground waste piping inside of building to satisfy these requirements.

3.3.2 Underground Piping

Underground piping and 100 mm (4 inch) or larger conduit, except heat distribution system, shall have flexible couplings installed where the piping enters the building. The couplings shall accommodate 75 mm (3 inches) of relative movement between the pipe and the building in any direction. Additional flexible couplings shall be provided where shown on the drawings.

3.4 PIPE SLEEVES

Pipe sleeves in interior non-fire rated walls shall be sized as indicated on the drawings to provide clearances that will permit differential movement of piping without the piping striking the pipe sleeve. Pipe sleeves in fire rated walls shall conform to the requirements in Section 07840 FIRESTOPPING.

3.5 SPREADERS

Spreaders shall be provided between adjacent piping runs to prevent contact during seismic activity whenever pipe or insulated pipe surfaces are less than 100 mm (4 inches) apart. Spreaders shall be applied at same interval as sway braces at an equal distance between the sway braces. If rack type hangers are used where the pipes are restrained from contact by mounting to the rack, spreaders are not required for pipes mounted in the rack. Spreaders shall be applied to surface of bare pipe and over insulation on insulated pipes utilizing high-density inserts and pipe protection shields in accordance with the requirements of Section 15080THERMAL INSULATION FOR MECHANICAL SYSTEMS.

3.6 SWAY BRACES FOR PIPING

Sway braces shall be provided to prevent movement of the pipes under seismic loading. Braces shall be provided in both the longitudinal and transverse directions, relative to the axis of the pipe. The bracing shall not interfere with thermal expansion requirements for the pipes as described in other sections of these specifications.

3.6.1 Transverse Sway Bracing

Transverse sway bracing for steel and copper pipe shall be provided as specified in Section 13080 SEISMIC PROTECTION FOR MISCELLANEOUS EQUIPMENT. All runs (length of pipe between end joints) shall have a minimum of two transverse braces. Transverse sway bracing for pipes of materials other than steel and copper shall be provided at intervals not to exceed the hanger spacing as specified in Section 15400 PLUMBING, GENERAL PURPOSE.

3.6.2 Longitudinal Sway Bracing

Longitudinal sway bracing shall be provided at 12 m (40 feet) intervals unless otherwise indicated. All runs (length of pipe between end joints) shall have one longitudinal brace minimum. Sway braces shall be constructed in accordance with the drawings. Branch lines, walls, or floors shall not be used as sway braces.

3.6.3 Vertical Runs

Run is defined as length of pipe between end joints. Vertical runs of piping shall be braced at not more than 3 m 10 foot vertical intervals. Braces for vertical runs shall be above the center of gravity of the segment being braced. All sway braces shall be constructed in accordance with the drawings. Sway branches shall not be connected to branch lines, walls, or floors.

3.6.4 Clamps and Hangers

Clamps or hangers on uninsulated pipes shall be applied directly to pipe. Insulated piping shall have clamps or hangers applied over insulation in accordance with Section 15080 THERMAL INSULATION FOR MECHANICAL SYSTEMS.

3.7 SWAY BRACES FOR DUCTS

3.7.1 Braced Ducts

Bracing details and spacing for rectangular and round ducts shall be in accordance with SMACNA Seismic Restraint Mnl, including Appendix E. However, the design seismic loadings for these items shall not be less than loadings obtained using the procedures in TI 809-04.

3.7.2 Unbraced Ducts

Hangers for unbraced ducts shall be attached to the duct within 50 mm (2 inches) of the top of the duct with a minimum of two #10 sheet metal screws. Unbraced ducts shall be installed with a 150 mm (6 inch) minimum clearance to vertical ceiling hanger wires.

END OF SECTION

SECTION 15080

THERMAL INSULATION FOR MECHANICAL SYSTEMS

PART 1 GENERAL

1.1 REFERENCES

The publications listed below form a part of this specification to the extent referenced. The publications are referred to in the text by basic designation only. At the discretion of the government, the manufacturer of any material supplied will be required to furnish test reports pertaining to any of the tests necessary to assure compliance with the standard or standards referenced in this specification.

AMERICAN SOCIETY FOR TESTING AND MATERIALS (ASTM)

ASTM A 580/A 580M	(1995a) Stainless and Steel Wire
ASTM B 209	(1996) Aluminum and Aluminum-Alloy Sheet and Plate
ASTM C 195	(1995) Mineral Fiber Thermal Insulating Cement
ASTM C 449/C 449M	(1995) Mineral Fiber Hydraulic-Setting Thermal Insulating and Finishing Cement
ASTM C 533	(1995) Calcium Silicate Block and Pipe Thermal Insulation
ASTM C 534	(1994) Preformed Flexible Elastomeric Cellular Thermal Insulation in Sheet and Tubular Form
ASTM C 547	(1995) Mineral Fiber Pipe Insulation
ASTM C 552	(1991) Cellular Glass Thermal Insulation
ASTM C 553	(1992) Mineral Fiber Blanket Thermal Insulation for Commercial and Industrial Applications
ASTM C 612	(1993) Mineral Fiber Block and Board Thermal Insulation
ASTM C 647	(1995) Properties and Tests of Mastics and Coating Finishes for Thermal Insulation
ASTM C 795	(1992) Thermal Insulation for Use in Contact With Austenitic Stainless Steel

ASTM C 916	(1985; Rev 1996) Adhesives for Duct Thermal Insulation
ASTM C 920	(1995) Elastomeric Joint Sealants
ASTM C 921	(1989 R; 1996) Determining the Properties of Jacketing Materials for Thermal Insulation
ASTM D 3278	(1996) Test Methods for Flash Point of Liquids by Small Scale & Closed-Cup Apparatus
ASTM E 84	(1996a) Surface Burning Characteristics of Building Materials
ASTM E 96	(1995) Water Vapor Transmission of Materials

MANUFACTURERS STANDARDIZATION SOCIETY OF THE VALVE AND FITTINGS INDUSTRY (MSS)

MSS SP-69	(1996) Pipe Hangers and Supports - Selection and Application

MIDWEST INSULATION CONTRACTORS ASSOCIATION (MICA)

MICA-01	(1993) National Commercial & Industrial Insulation Standards

1.2 SYSTEM DESCRIPTION

Field-applied insulation and accessories on mechanical systems shall be as specified herein; factory-applied insulation is specified under the piping, duct or equipment to be insulated. Insulation of heat distribution systems and chilled water systems outside of buildings shall be as specified in Section 02552 PRE-ENGINEERED UNDERGROUND HEAT DISTRIBUTION SYSTEM and Section 02555 PREFABRICATED UNDERGROUND COOLING DISTRIBUTION SYSTEM

1.3 GENERAL QUALITY CONTROL

1.3.1 Standard Products

Materials shall be the standard products of manufacturers regularly engaged in the manufacture of such products and shall essentially duplicate items that have been in satisfactory use for at least 2 years prior to bid opening.

1.3.2 Installer's Qualifications

Qualified installers shall have successfully completed three or more similar type jobs within the last 5 years.

1.3.3 Surface Burning Characteristics

Unless otherwise specified, insulation not covered with a jacket shall have a flame spread rating no higher than 75 and a smoke developed rating no higher than 150. The outside surface of insulation systems which are located in air plenums, in ceiling spaces, and in attic spaces shall have a flame spread rating no higher than 25 and a smoke developed rating no higher than 50. Insulation materials located exterior to the building perimeter are not required to be fire-rated. Flame spread and smoke developed ratings shall be determined by ASTM E 84. Insulation shall be tested in the same density and installed thickness as the material to be used in the actual construction. Jackets shall comply with the flame spread and smoke developed ratings of 25/50 as determined by ASTM E 84.

1.3.4 Identification of Materials

Packages or standard containers of insulation, jacket material, cements, adhesives, and coatings delivered for use, and samples required for approval shall have manufacturer's stamp or label attached giving the name of the manufacturer and brand, and a description of the material.

1.4 SUBMITTALS

Government approval is required for submittals with a "GA" designation; submittals having an "FIO" designation are for information only. The following shall be submitted in accordance with Section 01330 SUBMITTAL PROCEDURES:

SD-14 Samples

Thermal Insulation Materials; FIO.

A complete list of materials, including manufacturer's descriptive technical literature, performance data, catalog cuts, and installation instructions. The product number, k-value, thickness and furnished accessories for each mechanical system requiring insulation shall be included. Materials furnished under this section of the specification shall be submitted at one time.

After approval of materials and prior to applying insulation a booklet shall be prepared and submitted for approval. The booklet shall contain marked-up MICA-01 plates or detail drawings showing the insulation material and insulating system for each pipe,duct,or piece of equipment required to be insulated per this specification. The MICA plates shall be marked up showing the materials to be installed in accordance with the requirements of this specification for the specific insulation application. The Contractor shall submit all MICA Plates required to show the entire insulating system, including Plates required to show insulation penetrations, vessel bottom and top heads, legs, and skirt insulation as applicable. If the Contractor elects to submit detailed drawings instead of marked-up MICA Plates, the detail drawings shall show cut-away, section views, and details indicating each component of the insulation system and showing provisions for insulating jacketing, and sealing portions of the equipment. For each type of insulation installation on the drawings, provide a label which identifies each component in the installation insulation, adhesive, vapor retarder, jacketing, tape, mechanical fasteners, etc.) Indicate insulation by type and manufacturer. Three copies of the booklet shall be submitted at the jobsite to the Contracting Officer. One copy of the approved booklet shall remain with the insulation Contractor's display sample and two copies shall be provided for Government use.

After approval of materials actual sections of installed systems properly insulated in accordance with the specification requirements shall be displayed. Such actual sections must remain accessible to inspection throughout the job and will be reviewed from time to time for controlling the quality of the work throughout the construction site. Each material used shall be identified, by indicating on an attached sheet the specification requirement for the material and the material by each manufacturer intended to meet the requirement. Display sample sections will be inspected at the jobsite by the Contracting Officer. Approved display sample sections shall remain on display at the jobsite during the construction period. Upon completion of construction, the display sample sections will be closed and sealed.

Pipe Insulation Display Sections: Display sample sections shall include as a minimum an elbow or tee, a valve, dielectric unions and flanges, a hanger with protection shield and insulation insert, or dowel as required, at support point, method of fastening and sealing insulation at longitudinal lap, circumferential lap, butt joints at fittings and on pipe runs, and terminating points for each type of pipe insulation used on the job, and for hot pipelines and cold pipelines, both interior and exterior, even when the same type of insulation is used for these services.

Duct Insulation Display Sections: Display sample sections for rigid and flexible duct insulation used on the job. A display section for duct insulation exposed to weather shall be protected by enclosing with a temporary covering.

1.5 STORAGE

Materials shall be delivered in the manufacturer's unopened containers. Materials delivered and placed in storage shall be provided with protection from weather, humidity, dirt, dust and other contaminants. Insulation material and supplies that become dirty, dusty, wet, or otherwise contaminated may be rejected by the Contracting Officer.

PART 2 PRODUCTS

2.1 GENERAL MATERIALS

Materials shall be compatible and shall not contribute to corrosion, soften, or otherwise attack surfaces to which applied in either the wet or dry state. Materials to be used on stainless steel surfaces shall meet ASTM C 795 requirements. Materials shall be asbestos free and conform to the following:

2.1.1 Adhesives

2.1.1.1 Acoustical Lining Insulation Adhesive

Insulation shall be applied in cut-to-size pieces attached to the interior of the duct with a nonflammable, fire-resistant adhesive conforming to ASTM C 916, Type I. Exposed edges of the liner at the duct ends and at other joints where the lining will be subject to erosion shall be coated with a heavy brush coat of the nonflammable, fire-resistant adhesive to prevent delamination of glass fibers.

2.1.1.2 Mineral Fiber Insulation Cement

Cement shall be in accordance with ASTM C 195.

2.1.1.3 Lagging Adhesive

Lagging adhesives shall be nonflammable and fire-resistant and shall have flame spread and smoke developed ratings of 25/50 when measured in accordance with ASTM E 84. Adhesives shall be either the Class 1 or Class 2 type as defined below. Class 1 adhesive shall be pigmented white and be suitable for bonding fibrous glass cloth to faced and unfaced fibrous glass insulation board; for bonding cotton brattice cloth to faced and unfaced fibrous glass insulation board; for sealing edges of and bounding fibrous glass tape to joints of fibrous glass board; or for bonding lagging cloth to thermal insulation. Class 2 adhesive shall be pigmented white and be suitable for attaching fibrous glass insulation to metal surfaces. Lagging adhesives shall be applied in strict accordance with the manufacturer's recommendations.

2.1.2 Contact Adhesive

Adhesive may be dispersed in a nonhalogenated organic solvent with a low flash point (flash point less than minus 3.9 degrees C when tested in accordance with ASTM D 3278) or, dispersed in a nonflammable organic solvent which shall not have a fire point below 94 degrees C. The adhesive shall not adversely affect, initially or in service, the insulation to which it is applied, nor shall it cause any corrosive effect on metal to which it is applied. Any solvent dispersing medium or volatile component of the adhesive shall have no objectionable odor and shall not contain any benzene or carbon tetrachloride. The dried adhesive shall not emit nauseous, irritating, or toxic volatile matters or aerosols when the adhesive is heated to any temperature up to 100 degrees C. The adhesive shall be nonflammable and fire resistant.

2.1.3 Caulking

ASTM C 920, Type S, Grade NS, Class 25, Use A.

2.1.4 Corner Angles

Nominal 0.4060 mm (0.016 inch) aluminum 25 x 25 mm (1 x 1 inch) with factory applied kraft backing. Aluminum shall be ASTM B 209, Alloy 3003, 3105, or 5005.

2.1.5 Finishing Cement

Mineral fiber hydraulic-setting thermal insulating cement ASTM C 449/C 449M.

2.1.6 Fibrous Glass Cloth and Glass Tape

Fibrous glass cloth and glass tape shall have flame spread and smoke developed ratings of no greater than 25/50 when measured in accordance with ASTM E 84. Fibrous glass cloth and tape shall be 20 x 20 maximum size mesh. Tape shall be 100 mm wide rolls. Class 3 tape shall be 0.15 kg per square meter.

2.1.7 Staples

Outward clinching type monel.

2.1.8 Jackets

ASTM C 921, Type I, maximum moisture vapor transmission 0.02 perms, minimum puncture resistance 50 Beach units on all except concealed ductwork, where a minimum puncture resistance of 25 Beach units is acceptable. Minimum tensile strength, 6.1 N/mm (35 pounds/inch) width. ASTM C 921, Type II, minimum puncture resistance 25 Beach units, tensile strength minimum 3.5 N/mm (20 pound/inch) width. Jackets used on insulation exposed in finished areas shall have white finish suitable for painting without sizing.

2.1.8.1 White Vapor Retarder ASJ (All Service Jacket)

For use on hot/cold pipes, ducts, or equipment vapor retarder jackets used on insulation exposed in finished areas shall have white finish suitable for painting without sizing.

2.1.8.2 Aluminum Jackets

Aluminum jackets shall be corrugated, embossed or smooth sheet, 0.4060 mm (0.016 inch) nominal thickness; ASTM B 209, Temper H14, Temper H16, Alloy 3003, 5005, or 3105 with factory applied moisture retarder. Corrugated aluminum jacket shall not be used outdoors. Aluminum jacket securing bands shall be Type 304 stainless steel, 0.3960 mm (0.015 inch) thick, 12.7 mm (1/2 inch) wide for pipe under 300 mm (12 inch) diameter and 19.1 mm (3/4 inch) wide for pipe over 300 mm (12 inch) and larger diameter. Aluminum jacket circumferential seam bands shall be 50.8 x 0.4060 mm (2 x 0.016 inch) aluminum matching jacket material. Bands for insulation below ground shall be 19.1 x 0.5080 mm (3/4 x 0.020 inch) thick stainless steel, or fiberglass reinforced tape. The jacket may, at the option of the Contractor, be provided with a factory fabricated Pittsburg or "Z" type longitudinal joint. When the "Z" joint is used, the bands at the circumferential joints shall be designed by the manufacturer to seal the joints and hold the jacket in place.

2.1.8.3 Polyvinyl Chloride (PVC) Jackets

Polyvinyl chloride (PVC) jacket and fitting covers shall have high impact strength, UV resistant rating or treatment and moderate chemical resistance with minimum thickness 0.7620 mm (0.030 inch). Insulation under PVC jacket shall meet jacket manufacturer's written recommendations.

2.1.9 Vapor Retarder Coating

The vapor retarder coating shall be fire and water resistant and appropriately selected for either outdoor or indoor service. Color shall be white. The water vapor permeance of the compound shall not exceed 0.05 perm and shall be determined according to procedure B of ASTM E 96 utilizing apparatus described in ASTM E 96. The coating shall be a nonflammable, fire resistant type. The flash point of the compound shall not be less than 26.7 degrees C and shall be determined in accordance with ASTM D 3278. All other application and service properties shall be in accordance with ASTM C 647.

2.1.10 Wire

Soft annealed ASTM A 580/A 580M Type 302, 304 or 316 stainless steel, 16 or 18 gauge.

2.2 PIPE INSULATION MATERIALS

Pipe insulation materials shall be as follows:

2.2.1 Aboveground Cold Pipeline

Insulation for minus 34 degrees to plus 16 degrees C shall be as follows:

2.2.1.1 Cellular Glass

ASTM C 552, Type II, and Type III.

2.2.1.2 Flexible Cellular Insulation

ASTM C 534, Type I or II. Type II shall have vapor retarder skin on both sides of the insulation.

2.2.2 Aboveground Hot Pipeline

For aboveground hot pipeline above 16 degrees C insulation the following requirements shall be met.

2.2.2.1 Mineral Fiber

ASTM C 547, Class 1 or Class 2 as required for the operating temperature range.

2.2.2.2 Calcium Silicate

ASTM C 533, Type I indoor only, or outdoors above 121 degrees C (250 degrees F) pipe temperature.

2.2.2.3 Cellular Glass

ASTM C 552, Type II and Type III.

2.2.2.4 Flexible Cellular Insulation

ASTM C 534, Type I or II to 93 degrees C (200 degrees F) service.

2.2.3 Below ground Pipeline Insulation

ASTM C 552, Type II.

2.3 DUCT INSULATION MATERIALS

Duct insulation materials shall be as follows:

2.3.1 Rigid Mineral Fiber

ASTM C 612, Class 1.

2.3.2 Flexible Mineral Fiber

ASTM C 553, Type I, Class B-2.

2.3.3 Cellular Glass

ASTM C 552, Type I.

2.3.5 Flexible Cellular

ASTM C 534 Type II.

2.4 EQUIPMENT INSULATION MATERIALS

Equipment insulation materials shall be as follows:

2.4.1 Cold Equipment Insulation

For temperatures below 16 degrees C.

2.4.1.1 Cellular Glass

ASTM C 552, Type I, Type III, or Type IV as required.

2.4.1.2 Flexible Cellular Insulation

ASTM C 534, Type II.

2.4.2 Hot Equipment Insulation

For temperatures above 16 degrees C.

2.4.2.1 Rigid Mineral Fiber

ASTM C 612, Type 2, 3, 4 or 5 as required for temperature encountered to 982 degrees C (1800 degrees F).

2.4.2.2 Flexible Mineral Fiber

ASTM C 553, Type 1, 2, 3, 4, 5, 6, or 7 as required for temperature encountered to 649 degrees C (1200 degrees F).

2.4.2.3 Calcium Silicate

ASTM C 533, Type I, indoors only, or outdoors above 121 degrees C (250 degrees F). Pipe shape may be used on diesel engine exhaust piping and mufflers to 649 degrees C (1200 degrees F).

2.4.2.4 Cellular Glass

ASTM C 552, Type I, Type III, or Type IV as required.

2.4.2.5 Flexible Cellular Insulation

ASTM C 534, Type II, to 93 degrees C (200 degrees F).

PART 3 EXECUTION

3.1 APPLICATION - GENERAL

3.1.1 Installation

Except as otherwise specified, material shall be installed in accordance with the manufacturer's written instructions. Insulation materials shall not be applied until tests specified in other sections of this specification are completed. Material such as rust, scale, dirt and moisture shall be removed from surfaces to receive insulation. Insulation shall be kept clean and dry. Insulation shall not be removed from its shipping containers until the day it is ready to use and shall be returned to like containers or equally protected from dirt and moisture at the end of each workday. Insulation that becomes dirty shall be thoroughly cleaned prior to use. If insulation becomes wet or if cleaning does not restore the surfaces to like new condition, the insulation will be rejected, and shall be immediately removed from the jobsite. Joints shall be staggered on multi layer insulation. Mineral fiber thermal insulating cement shall be mixed with demineralized water when used on stainless steel surfaces. Insulation, jacketing and accessories shall be installed in accordance with MICA-01 standard plates except where modified herein or on the drawings.

3.1.2 Fire stopping

Where pipes and ducts pass through fire walls, fire partitions, above grade floors, and fire rated chase walls, the penetration shall be sealed with fire stopping materials as specified in Section 07840 FIRE STOPPING.

3.1.3 Painting and Finishing

Painting shall be as specified in Section 09900 PAINTING, GENERAL.

3.1.4 Flexible Cellular Insulation

Flexible cellular insulation shall be installed with seams and joints sealed with a contact adhesive. Flexible cellular insulation shall not be used on surfaces greater than 93 degrees C. Seams shall be staggered when applying multiple layers of insulation. Insulation exposed to weather and not shown to have jacketing shall be protected with two coats of UV resistant finish as recommended by the manufacturer after the adhesive is dry.

3.1.5 Welding

No welding shall be done on piping, duct or equipment without written approval of the Contracting Officer. The capacitor discharge welding process may be used for securing metal fasteners to duct.

3.2 PIPE INSULATION INSTALLATION

3.2.1 Pipe Insulation

3.2.1.1 General

Pipe insulation shall be installed on aboveground hot and cold pipeline systems as specified below to form a continuous thermal retarder, including straight runs, fittings and appurtenances unless specified otherwise. Installation shall be with full length units of insulation and using a single cut piece to complete a run. Cut pieces or scraps abutting each other shall not be used. Pipe insulation shall be omitted on the following:

a. Pipe used solely for fire protection.

b. Chromium plated pipe to plumbing fixtures. However, fixtures for use by the physically handicapped shall have the hot water supply and drain, including the trap, insulated where exposed.

c. Sanitary drain lines.

g. Air chambers.

3.2.1.2 Pipes Passing Through Sleeves

a. Pipe insulation shall be continuous through the sleeve.

b. An aluminum jacket with factory applied moisture retarder shall be provided over the insulation wherever penetrations require sealing.

c. Where penetrating interior walls, the aluminum jacket shall extend 50 mm beyond either side of the wall and shall be secured on each end with a band.

d. Where penetrating floors, the aluminum jacket shall extend from a point below the backup material to a point 250 mm above the floor with one band at the floor and one not more than 25 mm from the end of the aluminum jacket.

e. Where penetrating waterproofed floors, the aluminum jacket shall extend from below the backup material to a point 50 mm above the flashing with a band 25 mm from the end of the aluminum jacket.

f. Where penetrating exterior walls, the aluminum jacket required for pipe exposed to weather shall continue through the sleeve to a point 50 mm beyond the interior surface of the wall.

g. Where penetrating roofs, pipe shall be insulated as required for interior service to a point flush with the top of the flashing and sealed with vapor retarder coating. The insulation for exterior application shall butt tightly to the top of flashing and interior insulation. The exterior aluminum jacket shall extend 50 mm down beyond the end of the insulation to form a counter flashing. The flashing and counter flashing shall be sealed underneath with caulking.

h. In high abuse areas such as janitor closets and traffic areas in equipment rooms, kitchens, and mechanical rooms, aluminum jackets shall be utilized. Pipe insulation to the 1.5 m level shall be protected.

3.2.1.3 Pipes Passing Through Hangers

a. Insulation, whether hot or cold application, shall be continuous through hangers. All horizontal pipes 50 mm and smaller shall be supported on hangers with the addition of a Type 40 protection shield to protect the insulation in accordance with MSS SP-69. Whenever insulation shows signs of being compressed, or when the insulation or jacket shows visible signs of distortion at or near the support shield, insulation inserts as specified below for piping larger than 50 mm shall be installed.

b. Horizontal pipes larger than 50 mm at 16 degrees C and above shall be supported on hangers in accordance with MSS SP-69, and Section 15400 PLUMBING, GENERAL PURPOSE.

c. Horizontal pipes larger than 50 mm and below 16 degrees C shall be supported on hangers with the addition of a Type 40 protection shield in accordance with MSS SP-69. An insulation insert of cellular glass or calcium silicate shall be installed above each shield. The insert shall cover not less than the bottom 180 degree arc of the pipe. Inserts shall be the same thickness as the insulation, and shall extend 50 mm on each end beyond the protection shield. When insulation inserts are required per the above, and the insulation thickness is less than 25 mm, wooden or cork dowels or blocks may be installed between the pipe and the shield to prevent the weight of the pipe from crushing the insulation, as an option to installing insulation inserts. The insulation jacket shall be continuous over the wooden dowel, wooden block, or insulation insert.

d. Vertical pipes shall be supported with either Type 8 or Type 42 riser clamps with the addition of two Type 40 protection shields in accordance with MSS SP-69 covering the 360 degree arc of the insulation. An insulation insert of cellular glass or calcium silicate shall be installed between each shield and the pipe. The insert shall cover the 360 degree arc of the pipe. Inserts shall be the same thickness as the insulation, and shall extend 50 mm on each end beyond the protection shield. When insulation inserts are required per the above, and the insulation thickness is less than 25 mm, wooden or cork dowels or blocks may be installed between the pipe and the shield to prevent the hanger from crushing the insulation, as an option instead of installing insulation inserts. The insulation jacket shall be continuous over the wooden dowel, wooden block, or insulation insert. The vertical weight of the pipe shall be supported with hangers located in a horizontal section of the pipe. When the pipe riser is longer than 9 m, the weight of the pipe shall be additionally supported with hangers in the

vertical run of the pipe which are directly clamped to the pipe, penetrating the pipe insulation. These hangers shall be insulated and the insulation jacket sealed as indicated herein for anchors in a similar service.

e. Inserts shall be covered with a jacket material of the same appearance and quality as the adjoining pipe insulation jacket, shall overlap the adjoining pipe jacket 38 mm, and shall be sealed as required for the pipe jacket. The jacket material used to cover inserts in flexible cellular insulation shall conform to ASTM C 921, Type 1, and is allowed to be of a different material than the adjoining insulation material.

3.2.1.4 Pipes Passing Through Walls

a. For hot water pipes supplying lavatories or other similar heated service which requires insulation, the insulation shall be terminated on the backside of the finished wall. The insulation termination shall be protected with two coats of vapor barrier coating with a minimum total thickness of 2.0 mm applied with glass tape embedded between coats (if applicable). The coating shall extend out onto the insulation 51.0 mm and shall seal the end of the insulation. Glass tape seams shall overlap 25 mm. Caulk the annular space between the pipe and wall penetration. Cover the pipe and wall penetration with a properly sized (well fitting) escutcheon plate. The escutcheon plate shall overlap the wall penetration at least 10 mm.

b. For domestic cold water pipes requiring insulation, the insulation shall be terminated on the finished side of the wall (i.e. insulation must cover the pipe throughout the wall penetration). The insulation shall be protected with two coats of vapor barrier coating with a minimum total thickness of 2.0 mm. The coating shall extend out onto the insulation 51.0 mm and shall seal the end of the insulation. Caulk the annular space between the pipe and wall penetration. Cover the pipe and wall penetration with a properly sized (well fitting) escutcheon plate. The escutcheon plate shall overlap the wall penetration by at least 10 mm.

3.2.1.5 Flexible Cellular Pipe Insulation

Flexible cellular pipe insulation shall be tubular form for pipe sizes 150 mm and less. Type II sheet insulation used on pipes larger than 150 mm shall not be stretched around the pipe. On pipes larger than 300 mm, adhere insulation directly to the pipe on the lower 1/3 of the pipe. Seams shall be staggered when applying multiple layers of insulation. Sweat fittings shall be insulated with miter-cut pieces the same size as on adjacent piping. Screwed fittings shall be insulated with sleeved fitting covers fabricated from miter-cut pieces and shall be overlapped and sealed to the adjacent pipe insulation.

3.2.2 Aboveground Cold Pipelines

The following shall be included for aboveground cold pipelines minus 34 degrees C to plus 16 degrees C:

a. Domestic cold and chilled drinking water.

b. Make-up water.

c. Horizontal and vertical portions of interior roof drains.

d. Refrigerant suction lines.

e. Chilled water.

f. Dual temperature water, i.e. HVAC hot/chilled water.

g. Air conditioner condensate drains.

3.2.2.1 Insulation Thickness

Table A
Cooling Systems Pipe Diameter (Inches)

Service or Range of Temperature (degrees F)	**Run-outs* up to 2 in**	**1 in & less**	**1.25 to 2 in**	**2.5 to 4 in**	**5 to 6 in**	**8 in & larger**
40 - 55	**0.5**	**0.5**	**0.75**	**1**	**1**	**1**
less than 40	**1**	**1**	**1.5**	**1.5**	**1.5**	**1.5**

Thicknesses are based on insulation having thermal conductivity in the range of 0.23 to 0.27 Btu in/(h sf degree F) when measured at 75 F.

***When runouts to terminal units exceed 3.66 m, (12 feet,) the entire length of runout shall be insulated like the main feed pipe.**

Insulation thickness for cold pipelines shall be determined using Table I.

Table I - Cold Piping Insulation Thickness
Pipe Size (mm)

Type of Service	Material	Runouts up to 51 mm*	25 mm & less	32 - 51 mm	64 - 102 mm	127 - 152 mm	203 mm & larger
Chilled water supply & return & dual temp piping	CG	38	38	38	51	51	51
	FC	13	25	25	25	25	25
Cold domestic water, above and below ceilings	CG	38	38	38	38	38	38
	FC	10	10	10	10	10	10
Horizontal roof drain leaders (including underside of roof drain fitting)	FC		25	38	38	38	38
	CG		38	38	38	38	38

*When runouts to terminal units exceed 3.66 m the entire length of runout shall be insulated like the main feed pipe.

LEGEND:

CG - Cellular Glass
MF - Mineral Fiber
FC - Flexible Cellular

3.2.2.2 Jacket for Fibrous, Cellular Glass, and Phenolic Foam Insulated Pipe

Insulation shall be covered with a factory applied vapor retarder jacket or field applied seal welded PVC jacket. Insulation inside the building shown to be protected with an aluminum jacket shall have the insulation and vapor retarder jacket installed as specified herein. The aluminum jacket shall be installed as specified for piping exposed to weather, except sealing of the laps of the aluminum jacket is not required.

3.2.2.3 Insulation for Straight Runs (Fibrous, Cellular Glass and)

a. Insulation shall be applied to the pipe with joints tightly butted. The ends of fibrous insulation shall be sealed off with vapor retarder coating at intervals not to exceed 4.5 m.

b. Longitudinal laps of the jacket material shall overlap not less than 38 mm. Butt strips 75 mm wide shall be provided for circumferential joints.

c. Laps and butt strips shall be secured with adhesive and stapled on 100 mm centers if not factory self-sealing.

d. Factory self-sealing lap systems may be used when the ambient temperature is between 4 degrees and 50 degrees C during installation. The lap system shall be installed in accordance with manufacturer's recommendations. Stapler shall be used only if specifically recommended by the manufacturer. Where gaps occur, the section shall be replaced or the gap repaired by applying adhesive under the lap and then stapling.

e. All Staples, including those used to repair factory self-seal lap systems, shall be coated with a vapor retarder coating. All seams, except those on factory self-seal systems shall be coated with vapor retarder coating.

f. Breaks and punctures in the jacket material shall be patched by wrapping a strip of jacket material around the pipe and securing it with adhesive, stapling, and coating with vapor retarder coating. The patch shall extend not less than 38 mm past the break.

g. At penetrations such as thermometers, the voids in the insulation shall be filled and sealed with vapor retarder coating.

3.2.2.4 Insulation for Fittings and Accessories

a. Pipe insulation shall have ends thoroughly coated with a vapor retarder coating not less than 150 mm from each flange, union, valve, anchor, or fitting in all directions.

b. Precut, preformed insulation for placement over fittings, anchors, and mechanical couplings shall be used. Precut, preformed insulation shall exhibit the same properties as the adjoining pipe insulation. Where precut/preformed is unavailable, rigid preformed pipe insulation sections may be segmented into the shape required. Insulation of the same thickness and conductivity as the adjoining pipe insulation shall be used. If nesting size insulation is used, the insulation shall be overlapped 50 mm or one pipe diameter. Loose fill mineral fiber or insulating cement shall be used to fill the voids. Elbows insulated using segments shall not have less than 3 segments per elbow.

c. Upon completion of installation of insulation on anchors, fittings and accessories, terminations and insulation not protected by factory vapor retarder jackets or PVC fitting covers shall be protected with two coats of vapor retarder coating with a minimum total thickness of 2.0 mm, applied with glass tape embedded between coats. Tape seams shall overlap 25 mm. The coating shall extend out onto the adjoining pipe insulation 50 mm.

d. Anchors attached directly to the pipe shall be insulated for a sufficient distance to prevent condensation but not less than 150 mm from the insulation surface.

e. Provide a 45 degree taper to each fitting that is sealed.

f. Insulation shall be marked showing the location of unions, strainers, and check valves.

3.2.2.5 Optional PVC Fitting Covers

At the option of the Contractor, premolded, one or two piece PVC fitting covers may be used in lieu of the vapor retarder and embedded glass tape. Factory premolded insulation segments shall be used under the fitting covers for elbows. Insulation segments shall be the same thickness as adjoining pipe insulation and the insulation shall be protected with one coat of vapor retarder coating under the PVC cover. The covers shall be secured by PVC vapor retarder tape, adhesive, seal-welding or with tacks made for securing PVC covers. Seams in the cover, and tacks and laps to adjoining pipe insulation jacket, shall be sealed with vapor retarder tape to ensure that the assembly has a continuous vapor seal.

3.2.3 Aboveground Hot Pipelines

For hot pipelines above 16 degrees C the following shall be included:

a. Domestic hot water.

d. Hot water heating.

3.2.3.1 Insulation Thickness

Table B

Thickness of Pipe Insulation for Pipes Handling Steam and Fluids Other Than Domestic Hot Water (inches)

Fluid Temperature Range (F)	Insulation Conductivity Conductivity Range Btu in/(h sf F)	Mean Rating Temperature F	Nominal Pipe Diameter (in) Runouts* up to 2	1 & less	1.25 to 2	2.5 to 4	5 to 6	8 & lgr
above 350	0.32 - 0.34	250	1.5	2.5	2.5	3.0	3.5	3.5
251 - 350	0.29 - 0.31	200	1.5	2.0	2.5	2.5	3.5	3.5
201 - 250	0.27 - 0.30	150	1.0	1.5	1.5	2.0	2.0	3.5
141 - 200	0.25 - 0.29	125	0.5	1.5	1.5	1.5	1.5	1.5
105 - 140	0.24 - 0.28	100	0.5	1.0	1.0	1.0	1.5	1.5

Domestic and Service Hot Water Systems

> 105	0.24 - 0.28	100	0.5	1.0	1.0	1.5	1.5	1.5

* When runouts to terminal units exceed 12 ft, the entire length of runout shall be insulated like the main feed pipe.

Insulation thickness for hot pipelines shall be determined using Table II.

LEGEND:

CG - Cellular Glass
MF - Mineral Fiber
FC - Flexible Cellular

Table II - Hot Piping Insulation Thickness
Pipe Size (mm)

Type of Service (degrees C)	Material	Runouts up to 51 mm	25 mm & less	32 - 51 mm	64 - 102 mm	127 - 152 mm	203 mm & larger
Hot domestic water supply & recirculating system (93.3 C max)	CG	38	38	38	38	38	38
	FC	13	25	25	38	38	38
	MF	13	25	25	38	38	38
Heating hot water, supply & return (121.1 C max)	CG	38	38	51	51	51	64
	MF	13	38	38	51	64	76
High Temp Hot water (177.2 - 260C)	CG	51	89	102	114	127	140
	MF	38	76	89	102	102	114

*When runouts to terminal units exceed 3.66 m, the entire length of runout shall be insulated like the main feed pipe.

3.2.3.2 Jacket for Insulated Pipe

Insulation shall be covered, in accordance with manufacturer's recommendations, with a factory applied Type II jacket or field applied aluminum where required or seal welded PVC.

3.2.3.3 Insulation for Straight Runs

a. Insulation shall be applied to the pipe with joints tightly butted.

b. Longitudinal laps of the jacket material shall overlap not less than 38 mm, and butt strips 75 mm wide shall be provided for circumferential joints.

c. Laps and butt strips shall be secured with adhesive and stapled on 100 mm centers if not factory self-sealing. Adhesive may be omitted where pipe is concealed.

d. Factory self-sealing lap systems may be used when the ambient temperature is between 4 degrees and 49 degrees C and shall be installed in accordance with manufacturer's instructions. Laps and butt strips shall be stapled whenever there is nonadhesion of the system. Where gaps occur, the section shall be replaced or the gap repaired by applying adhesive under the lap and then stapling.

e. Breaks and punctures in the jacket material shall be patched by wrapping a strip of jacket material around the pipe and be secured with adhesive and stapled on 100 mm centers if not factory self-sealing. Adhesive may be omitted where pipe is concealed. Patch shall extend not less than 38 mm past the break.

f. Flexible cellular pipe insulation shall be installed by slitting tubular sections and applying onto piping or tubing. Alternately, whenever possible, slide unslit sections over the open ends of piping or tubing. All seams and butt joints shall be secured and sealed with adhesive. When using self seal products only the butt joints shall be secured with adhesive. Insulation shall be pushed on the pipe, never pulled. Stretching of insulation may result in open seams and joints. All edges shall be clean cut. Rough or jagged edges of the insulation shall not be permitted. Proper tools such as sharp knives shall be used. Type II sheet insulation when used on pipe larger than 150 mm shall not be stretched around the pipe. On pipes larger than 300 mm, adhere sheet insulation directly to the pipe on the lower 1/3 of the pipe.

3.2.3.4 Insulation for Fittings and Accessories

a. The run of the line pipe insulation shall have the ends brought up to the item.

b. Insulation of the same thickness and conductivity as the adjoining pipe insulation, either premolded or segmented, shall be placed around the item abutting the adjoining pipe insulation, or if nesting size insulation is used, overlapping 50 mm or one pipe diameter. Loose fill mineral fiber or insulating cement shall be used to fill the voids. Insulation for elbows less than 80 mm size shall be premolded. Insulation for elbows 80 mm (3 inch) size and larger shall be either premolded or segmented. Elbows insulated using segments shall have not less than 3 segments per elbow. Insulation may be wired or taped on until finish is applied.

c. Upon completion of installation of insulation on flanges, unions, valves, anchors, fittings and accessories, terminations and insulation not protected by factory vapor retarder jackets or PVC fitting covers shall be protected with two coats of Class 1 adhesive applied with glass tape embedded between coats. Tape seams shall overlap 25 mm. Adhesive shall extend

onto the adjoining insulation not less than 50 mm. The total dry film thickness shall be not less than 2.0 mm.

d. Insulation terminations shall be tapered to unions at a 45-degree angle.

e. At the option of the Contractor, factory premolded one- or two-piece PVC fitting covers may be used in lieu of the adhesive and embedded glass tape. Factory premolded segments or factory or field cut blanket insert insulation segments shall be used under the cover and shall be the same thickness as adjoining pipe insulation. The covers shall be secured by PVC vapor retarder tape, adhesive, seal-welding or with tacks made for securing PVC covers.

3.2.4 Piping Exposed to Weather

Piping exposed to weather shall be insulated and jacketed as specified for the applicable service inside the building. After this procedure, an aluminum jacket shall be applied. PVC jacketing requires no factory applied jacket beneath it. Flexible cellular insulation exposed to weather shall be treated in accordance with paragraph PIPE INSULATION MATERIALS.

3.2.4.1 Aluminum Jacket

The jacket for hot piping may be factory applied. The jacket shall overlap not less than 50 mm at longitudinal and circumferential joints and shall be secured with bands at not more than 300 mm centers. Longitudinal joints shall be overlapped down to shed water and located at 4 or 8 o'clock positions. Joints on piping 16 degrees C and below shall be sealed with caulking while overlapping to prevent moisture penetration. Where jacketing on piping 16 degrees C and below abuts an uninsulated surface, joints shall be caulked to prevent moisture penetration. Joints on piping above 16 degrees C shall be sealed with a moisture retarder.

3.2.4.2 Insulation for Fittings

Flanges, unions, valves, fittings, and accessories shall be insulated and finished as specified for the applicable service. Two coats of an emulsion type weatherproof mastic recommended by the insulation manufacturer shall be applied with glass tape embedded between coats. Tape overlaps shall be not less than 25 mm and the adjoining aluminum jacket not less than 50 mm. Factory preformed aluminum jackets may be used in lieu of the above. Molded PVC fitting covers shall be used with PVC lagging and adhesive welded moisture tight.

3.2.4.3 PVC Lagging

PVC lagging shall be ultraviolet resistant and adhesive welded vapor tight with manufacturer's recommended adhesive. Installation shall include provision for thermal expansion.

3.2.5 Below ground Pipe Insulation

The following shall be included:

Heating hot water.

3.2.5.1 Type of Insulation

Below ground pipe shall be insulated with 75 mm cellular glass insulation set in a coat of bedding compound as recommended by the manufacturer.

3.2.5.2 Installation of Below ground Pipe Insulation

a. Bore surfaces of the insulation shall be coated with a thin coat of gypsum cement of a type recommended by the insulation manufacturer. Coating thickness shall be sufficient to fill surface cells of insulation. Mastic type materials shall not be used for this coating.

b. Insulation applied to the pipe shall have joints tightly butted and bedded together with bedding compound as recommended by the manufacturer. Butt joints shall be staggered.

c. Stainless steel bands, 19 mm wide by 0.5080 mm thick shall be used to secure insulation in place. A minimum of two bands per section of insulation shall be applied. As an alternate, fiberglass reinforced tape may be used to secure insulation on piping up to 300 mm in diameter. A minimum of two bands per section of insulation shall be applied.

d. Insulation shall terminate at anchor blocks but shall be continuous through sleeves and manholes.

e. At point of entry to buildings, underground insulation shall be terminated 50 mm inside the wall or floor, shall butt tightly against the aboveground insulation and the butt joint shall be sealed with vapor retarder coating.

f. Provision for expansion and contraction shall be made in accordance with the insulation manufacturer's recommendations.

g. Flanges, couplings, valves, and fittings shall be insulated with factory premolded, prefabricated, or field-fabricated sections of insulation of the same material and thickness as the adjoining pipe insulation. Insulation sections shall be secured in place with wire, bore surfaces coated, and joints sealed as specified.

h. Insulation, including fittings, shall be finished with three coats of asphaltic mastic, with 10 by 10 glass mesh reinforcing fabric embedded between coats. Fabric shall be overlapped a minimum of 50 mm at joints. Total film thickness shall be a minimum of 4.7 mm. As an alternate, a prefabricated bituminous laminated jacket, reinforced with 10 by 10-glass fiber mesh, shall be applied to the insulation. Jacketing material and application procedures shall match manufacturer's written instructions.

i. At termination points, other than building entrances, the mastic and cloth or tape shall cover the ends of insulation and extend 50 mm along the bare pipe.

3.3 DUCT INSULATION INSTALLATION

Except for oven hood exhaust duct insulation, corner angles shall be installed on external corners of insulation on ductwork in exposed finished spaces before covering with jacket. Duct insulation shall be omitted on exposed supply and return ducts in air conditioned spaces unless otherwise shown. Air conditioned spaces shall be defined as those spaces directly supplied with cooled conditioned air (or provided with a cooling device such as a fan-coil unit) and heated conditioned air (or provided with a heating device such as a unit heater, radiator or convector).

3.3.1 Duct Insulation Thickness

	Minimum Duct Insulation (inches)			
	Cooling		Heating	
Duct Location	Annual Cooling Degree Days Base 65 F	Insulation R-Value (h sf F)/Btu	Annual Heating Degree Days Base 65 F	Insulation R-Value (h sf F)/Btu
Exterior Of Building	<500 -	3.3	<1500	3.3
	500 - 1150	5.0	1500 - 4500	5.0
	1151 - 2000	6.5	4501 - 7500	6.5
	>2000	8.0	>7500	8.0
	Temperature Difference	Insulation R-Value (h sf F)/Btu	Temperature Difference	Insulation R-Value (h sf F)/Btu
Inside building envelope or in un-conditioned spaces	<15	None reqd	<15	None reqd
	15<TD<40	3.3	15<TD<40	3.3
	40<TD	5.0	40<TD	5.0

These R values do not include the film resistances. Additional insulation, vapor retarders, or both, may be required to limit vapor transmission and condensation. Where ducts are designed to convey both heated and cooled air, duct insulation shall be as required by the most restrictive condition. Resistance is to be measured in accordance with ASTM C 518 at a mean temperature of 75 degrees F. The temperature difference is at design conditions between the space within which the duct is located and the design air temperature in the duct. Resistance for runouts to terminal devices less than 10 ft in length need not exceed 3.3 (h sf F)/Btu.

Duct insulation thickness shall be in accordance with Table III.

Table III - Minimum Duct Insulation (mm)

Cold Air Ducts	50
Relief Ducts	38
Fresh Air Intake Ducts	38

Warm Air Ducts	50
Relief Ducts	38
Fresh Air Intake Ducts	38

3.3.2 Insulation and Vapor Retarder for Cold Air Duct

Insulation and vapor retarder for cold air duct below 16 degrees C: Ducts and associated equipment shall be insulated to a thickness which is in accordance with Table III. The following shall be insulated:

a. Supply ducts.

b. Return air ducts.

c. Relief ducts.

d. Flexible runouts (field-insulated).

e. Plenums.

f. Duct-mounted coil casings.

g. Coil headers and return bends.

h. Coil casings.

i. Fresh air intake ducts.

j. Filter boxes.

k. Mixing boxes (field-insulated).

l. Supply fans (field-insulated).

m. Site-erected air conditioner casings.

n. Ducts exposed to weather.

o. Combustion air intake ducts.

Insulation for rectangular ducts shall be flexible type where concealed, minimum density 12 kg per cubic meter (3/4 pcf) and rigid type where exposed, minimum density 48 kg per cubic meter (3 pcf). Insulation for round/oval ducts shall be flexible type, minimum density 12 kg per cubic meter (3/4 pcf) with a factory Type I jacket; or, a semi rigid board, minimum density 48 kg per cubic meter (3 pcf), formed or fabricated to a tight fit, edges beveled and joints tightly butted and staggered, with a factory applied Type I all service jacket. Insulation for exposed ducts shall be provided with either a white, paintable, factory-applied Type I jacket or a vapor retarder jacket coating finish as specified. Fibrous and cellular glass insulation on concealed duct shall be provided with a factory-applied Type I vapor

retarder jacket. The total dry film thickness shall be approximately 2.0 mm. Duct insulation shall be continuous through sleeves and prepared openings except fire wall penetrations. Duct insulation terminating at fire dampers, shall be continuous over the damper collar and retaining angle of fire dampers, which are exposed to unconditioned air and which may be prone to condensate formation. Duct insulation and vapor retarder shall cover the collar, neck, and any uninsulated surfaces of diffusers, registers and grills. Vapor retarder materials shall be applied to form a complete unbroken vapor seal over the insulation.

3.3.2.1 Installation on Concealed Duct

a. For rectangular, oval or round ducts, insulation shall be attached by applying Class 2 adhesive around the entire perimeter of the duct in 150 mm wide strips on 300 mm centers.

b. For rectangular and oval ducts, 600 mm (24 inches) and larger insulation shall be additionally secured to bottom of ducts by the use of mechanical fasteners. Fasteners shall be spaced on 450 mm centers and not more than 450 mm from duct corners.

c. For rectangular, oval and round ducts, mechanical fasteners shall be provided on sides of duct risers for all duct sizes. Fasteners shall be spaced on 450 mm centers and not more than 450 mm from duct corners.

d. Insulation shall be impaled on the mechanical fasteners where used and shall be pressed thoroughly into the adhesive. Care shall be taken to ensure vapor retarder jacket joints overlap 50 mm. The insulation shall not be compressed to a thickness less than that specified. Insulation shall be carried over standing seams and trapeze-type duct hangers.

e. Self-locking washers shall be installed where mechanical fasteners are used. The pin shall be trimmed back and bent over.

f. Jacket overlaps shall be secured under the overlap with Class 2 adhesive and stapled on 100 mm centers. Staples and seams shall be coated with a brush coat of vapor retarder coating.

g. Breaks in the jacket material shall be covered with patches of the same material as the vapor retarder. The patches shall extend not less than 50 mm beyond the break or penetration in all directions and shall be secured with Class 2 adhesive and staples. Staples and joints shall be sealed with a brush coat of vapor retarder coating.

h. At jacket penetrations such as hangers, thermometers, and damper operating rods, voids in the insulation shall be filled and the penetration sealed with a brush coat of vapor retarder coating.

i. Insulation terminations and pin punctures shall be sealed and flashed with a reinforced vapor retarder coating finish. The coating shall overlap the adjoining insulation and uninsulated surface 50 mm. Pin puncture coatings shall extend 50 mm from the puncture in all directions.

j. Where insulation standoff brackets occur, insulation shall be extended under the bracket and the jacket terminated at the bracket.

3.3.2.2 Installation on Exposed Duct Work

a. For rectangular ducts, rigid insulation shall be secured to the duct by mechanical fasteners on all four sides of the duct, spaced not more than 300 mm apart and not more than 75 mm from the edges of the insulation joints. A minimum of two rows of fasteners shall be provided for each side of duct 300 mm and larger. One row shall be provided for each side of duct less than 300 mm.

b. Duct insulation shall be formed with minimum jacket seams. Each piece of rigid insulation shall be fastened to the duct using mechanical fasteners. When the height of projections is less than the insulation thickness, insulation shall be brought up to standing seams, reinforcing, and other vertical projections and shall not be carried over. Vapor retarder jacket shall be continuous across seams, reinforcing, and projections. When height of projections is greater than the insulation thickness, insulation and jacket shall be carried over.

c. Insulation shall be impaled on the fasteners; self-locking washers shall be installed and the pin trimmed and bent over.

d. Joints in the insulation jacket shall be sealed with a 100 mmwide strip of the same material as the vapor retarder jacket. The strip shall be secured with Class 2 adhesive and stapled. Staples and seams shall be sealed with a brush coat of vapor retarder coating.

e. Breaks and ribs or standing seam penetrations in the jacket material shall be covered with a patch of the same material as the jacket. Patches shall extend not less than 50 mm beyond the break or penetration and shall be secured with Class 2 adhesive and stapled. Staples and joints shall be sealed with a brush coat of vapor retarder coating.

f. At jacket penetrations such as hangers, thermometers, and damper operating rods, the voids in the insulation shall be filled and the penetrations sealed with a brush coat of vapor retarder coating.

g. Insulation terminations and pin punctures shall be sealed and flashed with a reinforced vapor retarder coating finish. The coating shall overlap the adjoining insulation and uninsulated surface 50 mm. Pin puncture coatings shall extend 50 mm from the puncture in all directions.

h. Oval and round ducts, flexible type, shall be insulated with factory Type I jacket insulation with minimum density of 12 kg per cubic meter, attached by applying Class 2 adhesive around the entire perimeter of the duct in 150 mm wide stripe on 300 mm centers.

3.3.3 Insulation for Warm Air Duct

For warm air ducts above 16 degrees C, ducts and associated equipment shall be insulated to a thickness which is in accordance with Table III. The following shall be insulated:

a. Supply ducts.

b. Return air ducts.

c. Relief air ducts.

d. Flexible runouts (field insulated).

e. Plenums.

f. Duct-mounted coil casings.

g. Coil-headers and return bends.

h. Coil casings.

i. Fresh air intake ducts.

j. Filter boxes.

k. Mixing boxes.

l. Supply fans.

n. Ducts exposed to weather.

Insulation for rectangular ducts shall be flexible type where concealed, minimum density 12 kg per cubic meter; and rigid type where exposed, minimum density 48 kg per cubic meter. Insulation on exposed ducts shall be provided with a white, paintable, factory-applied Type II jacket, or finished with Class 1 adhesive finish. Flexible type insulation shall be used for round ducts, minimum density 12 kg per cubic meter with a factory-applied Type II jacket. Insulation on concealed duct shall be provided with a factory-applied Type II jacket. Class 1 adhesive finish where indicated to be used shall be accomplished by applying two coats of Class 1 adhesive with a layer of glass cloth embedded between the coats. The total dry film thickness shall be approximately 2.0 mm). Duct insulation shall be continuous through sleeves and prepared openings. Duct insulation shall terminate at fire dampers and flexible connections.

3.3.3.1 Installation on Concealed Duct

a. For rectangular, oval and round ducts, insulation shall be attached by applying Class 2 adhesive around the entire perimeter of the duct in 150 mm wide strips on 300 mm centers.

b. For rectangular and oval ducts 600 mm and larger, insulation shall be secured to the bottom of ducts by the use of mechanical fasteners. Fasteners shall be spaced on 450 mm centers and not more than 450 mm from duct corner.

c. For rectangular, oval and round ducts, mechanical fasteners shall be provided on sides of duct risers for all duct sizes. Fasteners shall be spaced on 450 mm centers and not more than 450 mm from duct corners.

d. The insulation shall be impaled on the mechanical fasteners where used and shall be pressed thoroughly into the adhesive. The insulation shall not be compressed to a thickness less than that specified. Insulation shall be carried over standing seams and trapeze-type hangers.

e. Self-locking washers shall be installed where mechanical fasteners are used and the pin trimmed and bent over.

f. Insulation jacket shall overlap not less than 50 mm at joints and the lap shall be secured with Class 2 adhesive under the lap and stapled on 100 mm centers.

3.3.3.2 Installation on Exposed Duct

a. For rectangular ducts, the rigid insulation shall be secured to the duct by the use of mechanical fasteners on all four sides of the duct, spaced not more than 300 mm apart and not more than 75 mm from the edges of the insulation joints. A minimum of two rows of fasteners shall be provided for each side of duct 300 mm and larger and a minimum of one row for each side of duct less than 300 mm.

b. Duct insulation with factory-applied jacket shall be formed with minimum jacket seams, and each piece of rigid insulation shall be fastened to the duct using mechanical fasteners. When the height of projection is less than the insulation thickness, insulation shall be brought up to standing seams, reinforcing, and other vertical projections and shall not be carried over the projection. Jacket shall be continuous across seams, reinforcing, and projections. Where the height of projections is greater than the insulation thickness, insulation and jacket shall be carried over the projection.

c. Insulation shall be impaled on the fasteners; self-locking washers shall be installed and pin excess clipped and bent over.

d. Joints on jacketed insulation shall be sealed with a 100 mm wide strip of the same material as the jacket. The strip shall be secured with Class 2 adhesive and stapled.

e. Breaks and penetrations in the jacket material shall be covered with a patch of the same material as the jacket. Patches shall extend not less than 50 mm beyond the break or penetration and shall be secured with Class 2 adhesive and stapled.

f. Insulation terminations and pin punctures shall be sealed and flashed with a Class 1 adhesive. Two coats of Class 1 adhesive coating shall be applied with glass cloth embedded between coats. The total coating shall have a dry film thickness of approximately 2.0 mm and shall overlap the adjoining insulation and uninsulated surface 50 mm.

g. Oval and round ducts, flexible type, shall be insulated with factory Type I jacket insulation, minimum density of 12 kg per cubic meter attached by applying Class 2 adhesive around the entire perimeter of the duct in 150 mm wide stripe on 300 mm center. Joints shall be

sealed with a 100 mm wide strip of the same material as the jacket. The strip shall be secured with Class 2 adhesive and stapled.

3.3.4 Ducts Handling Air for Dual Purpose

For air handling ducts for dual purpose below and above 16 degrees C, ducts shall be insulated as specified for cold air duct.

3.3.6 Duct Test Holes

After duct systems have been tested, adjusted, and balanced, breaks in the insulation and jacket shall be repaired in accordance with the applicable section of this specification for the type of duct insulation to be repaired.

3.3.7 Duct Exposed to Weather

3.3.7.1 Installation

Ducts exposed to weather shall be insulated and finished as specified for the applicable service for exposed duct inside the building. After the above is accomplished, the insulation shall then be further finished as detailed in the following subparagraphs.

3.3.7.2 Round Duct

Aluminum jacket with factory applied moisture retarder shall be applied with the joints lapped not less than 75 mm and secured with bands located at circumferential laps and at not more than 300 mm intervals throughout. Horizontal joints shall lap down to shed water and located at 4 or 8 o'clock position. Joints shall be sealed with caulking to prevent moisture penetration. Where jacketing abuts an uninsulated surface, joints shall be sealed with caulking.

3.3.7.3 Fittings

Fittings and other irregular shapes shall be finished as specified for rectangular ducts.

3.3.7.4 Rectangular Ducts

Two coats of weatherproof mastic shall be applied to the entire surface with a layer of glass cloth embedded between coats. Glass cloth overlaps at joints and adjoining surfaces shall be not less than 50 mm. Each coat of weatherproof mastic shall be 2.0 mm minimum thickness. The top of the exterior duct work shall be built up with insulation in such a manner as to ensure a positive drain of any rain water which may appear. The minimum pitch of the built up section shall be in accordance with the recommendation of the manufacturer of the vapor retarder/weatherproof mastic. Care should be taken in the construction of the built up section so that no low areas appear; this shall ensure no "pooling" of water on the vapor retarder which leads to premature degradation of the retarder and subsequent deterioration of the insulation.

3.4 EQUIPMENT INSULATION INSTALLATION

3.4.1 General

Removable insulation sections shall be provided to cover parts of equipment which must be opened periodically for maintenance including vessel covers, fasteners, flanges and accessories. Equipment insulation shall be omitted on the following:

a. Handholes.

b. Boiler manholes.

c. Cleanouts.

d. ASME stamps.

e. Manufacturer's nameplates.

3.4.2 Insulation for Cold Equipment

Cold equipment below 16 degrees C: Insulation shall be furnished on equipment handling media below 16 degrees C including the following:

a. Pumps.

b. Refrigeration equipment parts that are not factory insulated.

c. Drip pans under chilled equipment.

d. Cold water storage tanks.

f. Duct mounted coils.

g. Cold and chilled water pumps.

i. Roof drain bodies.

j. Air handling equipment parts that are not factory insulated.

k. Expansion and air separation tanks.

3.4.2.1 Insulation Type

Insulation shall be suitable for the temperature encountered. Thicknesses shall be as follows:

a. Equipment handling media between 2 and 16 degrees C: 50 mm (2 inch) thick cellular glass, 38 mm (1-1/2 inch) thick flexible cellular.

b. Equipment handling media between minus 18 degrees C and plus 1 degrees C: 90 mm (3-1/2 inch) thick cellular glass, 63.5 mm (2-1/2 inch) flexible cellular.

c. Equipment handling media between minus 34 degrees C and minus 18 degrees C: 100 mm (4 inch) thick cellular glass 75 mm (3 inch) thick flexible cellular.

3.4.2.2 Pump Insulation

a. Pumps shall be insulated by forming a box around the pump housing. The box shall be constructed by forming the bottom and sides using joints which do not leave raw ends of insulation exposed. Joints between sides and between sides and bottom shall be joined by adhesive with lap strips for rigid mineral fiber and contact adhesive for flexible cellular insulation. The box shall conform to the requirements of MICA-01 plate No. 49 when using flexible cellular insulation. Joints between top cover and sides shall fit tightly forming a female shiplap joint on the side pieces and a male joint on the top cover, thus making the top cover removable.

b. Exposed insulation corners shall be protected with corner angles.

c. Upon completion of installation of the insulation, including removable sections, two coats of vapor retarder coating shall be applied with a layer of glass cloth embedded between the coats. The total dry thickness of the finish shall be 2.0 mm (1/16 inch). A parting line shall be provided between the box and the removable sections allowing the removable sections to be removed without disturbing the insulation coating. Caulking shall be applied to parting line, between equipment and removable section insulation, and at all penetrations.

3.4.2.3 Other Equipment

a. Insulation shall be formed or fabricated to fit the equipment. To ensure a tight fit on round equipment, edges shall be beveled and joints shall be tightly butted and staggered.

b. Insulation shall be secured in place with bands or wires at intervals as recommended by the manufacturer but not more than 300 mm centers except flexible cellular which shall be adhered. Insulation corners shall be protected under wires and bands with suitable corner angles.

c. Cellular glass and phenolic foam insulation shall be set in a coating of bedding compound, and joints shall be sealed with bedding compound as recommended by the manufacturer. Mineral fiber insulation joints shall be filled with finishing cement.

d. Insulation on heads of heat exchangers shall be removable. Removable section joints shall be fabricated using a male-female shiplap type joint. The entire surface of the removable section shall be finished by applying two coats of vapor retarder coating with a layer of glass

cloth embedded between the coats. The total dry thickness of the finish shall be 2.0 mm (1/16 inch).

e. Exposed insulation corners shall be protected with corner angles.

f. Insulation on equipment with ribs shall be applied over 150 x 150 mm (6 x 6 inches) by 12 gauge welded wire fabric which has been cinched in place, or if approved by the Contracting Officer, spot welded to the equipment over the ribs. Insulation shall be secured to the fabric with J-hooks and 50 x 50 mm (2 x 2 inches) washers or shall be securely banded or wired in place on 300 mm centers.

3.4.2.4 Vapor Retarder

Upon completion of installation of insulation, penetrations shall be caulked. Two coats of vapor retarder coating shall be applied over insulation, including removable sections, with a layer of glass cloth embedded between the coats. The total dry thickness of the finish shall be 2.0 mm (1/16 inch). Caulking shall be applied to parting line between equipment and removable section insulation.

3.4.3 Insulation for Hot Equipment

Insulation shall be furnished on equipment handling media above 16 degrees C including the following:

a. Converters.

b. Heat exchangers.

c. Hot water generators.

d. Water heaters.

e. Pumps handling media above 54 degrees C.

g. Hot water storage tanks.

h. Air separation tanks.

l. Unjacketed boilers or parts of boilers.

m. Boiler flue gas connection from boiler to stack (if inside).

3.4.3.1 Insulation

Insulation shall be suitable for the temperature encountered. Shell and tube-type heat exchangers shall be insulated for the temperature of the shell medium. Insulation thicknesses shall be as follows:

a. Equipment handling media to 121 degrees C (250 degrees F): 50 mm (2 inch) thick rigid mineral fiber, 50 mm (2 inch) thick flexible mineral fiber, 38 mm (1.5 inch) cellular glass; to 93.3 degrees C (200 degrees F) 25 mm (1.0 inch) Flexible Cellular.

b. Equipment handling media to 204 degrees C (400 degrees F): 75 mm (3 inch) thick rigid mineral fiber, 75 mm (3 inch) thick flexible mineral fiber, 75 mm (3 inch) thick cellular glass.

c. Equipment handling media to 316 degrees C (600 degrees F): 127 mm (5 inch) thick rigid mineral fiber, 150 mm (6 inch) thick flexible mineral fiber, 150 mm (6 inch) thick cellular glass.

3.4.3.2 Insulation of Pumps

Pumps shall be insulated by forming a box around the pump housing. The box shall be constructed by forming the bottom and sides using joints which do not leave raw ends of insulation exposed. Bottom and sides shall be banded to form a rigid housing which does not rest on the pump. Joints between top cover and sides shall fit tightly. The top cover shall have a joint forming a female shiplap joint on the side pieces and a male joint on the top cover, making the top cover removable. Two coats of Class I adhesive shall be applied over insulation, including removable sections, with a layer of glass cloth embedded between the coats. A parting line shall be provided between the box and the removable sections allowing the removable sections to be removed without disturbing the insulation coating. The total dry thickness of the finish shall be 2.0 mm (1/16 inch). Caulking shall be applied to parting line of the removable sections and penetrations.

3.4.3.3 Other Equipment

a. Insulation shall be formed or fabricated to fit the equipment. To ensure a tight fit on round equipment, edges shall be beveled and joints shall be tightly butted and staggered.

b. Insulation shall be secured in place with bands or wires at intervals as recommended by the manufacturer but not greater than 300 mm centers except flexible cellular which shall be adhered. Insulation corners shall be protected under wires and bands with suitable corner angles.

c. On high vibration equipment, cellular glass insulation shall be set in a coating of bedding compound as recommended by the manufacturer, and joints shall be sealed with bedding compound. Mineral fiber joints shall be filled with finishing cement.

d. Insulation on heads of heat exchangers shall be removable. The removable section joint shall be fabricated using a male-female shiplap type joint. Entire surface of the removable section shall be finished as specified.

e. Exposed insulation corners shall be protected with corner angles.

f. On equipment with ribs, such as boiler flue gas connection, draft fans, and fly ash or soot collectors, insulation shall be applied over 150 x 150 mm (6 x 6 inch) by 12 gauge welded wire fabric which has been cinched in place, or if approved by the Contracting Officer, spot

welded to the equipment over the ribs. Insulation shall be secured to the fabric with J-hooks and 50 x 50 mm (2 x 2 inch) washers or shall be securely banded or wired in place on 300 mm (maximum) centers.

g. On equipment handling media above 316 degrees C (600 degrees F), insulation shall be applied in two or more layers with joints staggered.

h. Upon completion of installation of insulation, penetrations shall be caulked. Two coats of Class I adhesive shall be applied over insulation, including removable sections, with a layer of glass cloth embedded between the coats. The total dry thickness of the finish shall be 2.0 mm (1/16 inch). Caulking shall be applied to parting line between equipment and removable section insulation.

3.4.4 Equipment Handling Dual Temperature Media

Below and above 16 degrees C: Equipment handling dual temperature media shall be insulated as specified for cold equipment.

3.4.5 Equipment Exposed to Weather

3.4.5.1 Installation

Equipment exposed to weather shall be insulated and finished in accordance with the requirements for ducts exposed to weather in paragraph DUCT INSULATION INSTALLATION.

3.4.5.2 Optional Panels

At the option of the Contractor, prefabricated metal insulation panels may be used in lieu of the insulation and finish previously specified. Thermal performance shall be equal to or better than that specified for field applied insulation. Panels shall be the standard catalog product of a manufacturer of metal insulation panels. Fastenings, flashing, and support system shall conform to published recommendations of the manufacturer for weatherproof installation and shall prevent moisture from entering the insulation. Panels shall be designed to accommodate thermal expansion and to support an 1112 N (250 pound) walking load without permanent deformation or permanent damage to the insulation. Exterior metal cover sheet shall be aluminum and exposed fastenings shall be stainless steel or aluminum.

END OF SECTION

SECTION 15190

GAS PIPING SYSTEMS

PART 1 GENERAL

1.1 REFERENCES

The publications listed below form a part of this specification to the extent referenced. The publications are referred to in the text by basic designation only.

AMERICAN GAS ASSOCIATION (AGA)

AGA Mnl	(1994; Addenda/Correction Jan 1996) A.G.A. Plastic Pipe Manual for Gas Service

AMERICAN NATIONAL STANDARDS INSTITUTE

ANSI Z21.45	(1995) Flexible Connectors of Other Than All-Metal Construction for Gas Appliances
ANSI Z21.69	(1992; Z21.69a) Connectors for Movable Gas Appliances

AMERICAN PETROLEUM INSTITUTE (API)

API Spec 6D	(1994; Supple 1 Jun 1996; Supple 2 Dec 1997) Pipeline Valves (Gate, Plug, Ball, and Check Valves)

AMERICAN SOCIETY FOR TESTING AND MATERIALS (ASTM)

ASTM A 539	(1996) Electric-Resistance-Welded Coiled Steel Tubing for Gas and Fuel Oil Lines
ASTM B 88	(1996) Seamless Copper Water Tube
ASTM B 210	(1995) Aluminum and Aluminum-Alloy Drawn Seamless Tubes
ASTM B 210M	(1995)Aluminum and Aluminum-Alloy Drawn Seamless Tubes (Metric)
ASTM B 241/B 241M	(1996) Aluminum and Aluminum-Alloy Seamless Pipe and Seamless Extruded Tube
ASTM B 280	(1995a) Seamless Copper Tube for Air Conditioning and Refrigeration Field Service

ASTM D 2513	(1996a) Thermoplastic Gas Pressure Pipe, Tubing, and Fittings
ASTM D 2517	(1994) Reinforced Epoxy Resin Gas Pressure Pipe and Fittings

AMERICAN SOCIETY OF MECHANICAL ENGINEERS (ASME)

ASME B1.20.1	(1983; R 1992) Pipe Threads, General Purpose (Inch)
ASME B16.3	(1992) Malleable Iron Threaded Fittings
ASME B16.5	(1996; B16.5a) Pipe Flanges and Flanged Fittings NPS 1/2 thru NPS 24
ASME B16.9	(1993) Factory-Made Wrought Steel Buttwelding Fittings
ASME B16.11	(1996) Forged Fittings, Socket-Welding and Threaded
ASME B16.21	(1992) Nonmetallic Flat Gaskets for Pipe Flanges
ASME B16.33	(1990) Manually Operated Metallic Gas Valves for Use in Gas Piping Systems Up to 125 psig (Sizes 1/2 through 2)
ASME B31.1	(1995; B31.1a; B31.1b; B31.1c) Power Piping
ASME B31.2	(1968) Fuel Gas Piping
ASME B36.10M	(1996) Welded and Seamless Wrought Steel Pipe
ASME BPV IX	(1998) Boiler and Pressure Vessel Code; Section IX, Welding and Brazing Qualifications

MANUFACTURERS STANDARDIZATION SOCIETY OF THE VALVE AND FITTINGS INDUSTRY (MSS)

MSS SP-25	(1998) Standard Marking System for Valves, Fittings, Flanges and Unions
MSS SP-58	(1993) Pipe Hangers and Supports - Materials, Design and Manufacture
MSS SP-69	(1996) Pipe Hangers and Supports - Selection and Application

NATIONAL FIRE PROTECTION ASSOCIATION (NFPA)

NFPA NFPA 54/ANSI Z223.1	(1996; Errata) National Fuel Gas Code

NFPA 70 (1999) National Electrical Code

THE SOCIETY FOR PROTECTIVE COATING (SSPC)

SSPC SP 6/NACE 3 (1994) Commercial Blast Cleaning

UNDERWRITERS LABORATORIES (UL)

UL Gas&Oil Dir (1996; Supple)Gas and Oil Equipment Directory

1.2 GENERAL REQUIREMENTS

1.2.1 Welding

Piping shall be welded in accordance with qualified procedures using performance qualified welders and welding operators. Procedures and welders shall be qualified in accordance with ASME BPV IX. Welding procedures qualified by others, and welders and welding operators qualified by another employer may be accepted as permitted by ASME B31.1. The Contracting Officer shall be notified at least 24 hours in advance of tests and the tests shall be performed at the work site if practicable. The Contracting Officer shall be furnished with a copy of qualified procedures and a list of names and identification symbols of qualified welders and welding operators. The welder or welding operator shall apply his assigned symbol near each weld he makes as a permanent record. Structural members shall be welded in accordance with Section 05055 WELDING, STRUCTURAL.

1.2.3 Standard Products

Materials and equipment shall be the standard products of a manufacturer regularly engaged in the manufacture of the products and shall essentially duplicate items that have been in satisfactory use for at least 2 years prior to bid opening. Asbestos or products containing asbestos shall not be used. Manufacturer's descriptive data and installation instructions shall be submitted for approval for compression-type mechanical joints used in joining dissimilar materials and for insulating joints. Valves, flanges and fittings shall be marked in accordance with MSS SP-25.

1.2.4 Verification of Dimensions

The Contractor shall become familiar with all details of the work, verify all dimensions in the field, and shall advise the Contracting Officer of any discrepancy before performing the work.

1.3 SUBMITTALS

Government approval is required for submittals with a "GA" designation; submittals having an "FIO" designation are for information only. The following shall be submitted in accordance with Section 01330 SUBMITTAL PROCEDURES:

SD-04 Drawings

Gas Piping System;FIO.

Drawings showing location, size and all branches of pipeline; location of all required shutoff valves; and instructions necessary for the installation of connectors and supports.

PART 2 PRODUCTS

2.1 PIPE AND FITTINGS

2.1.1 Steel Pipe, Joints, and Fittings

Steel pipe shall conform to ASME B36.10M. Malleable-iron threaded fittings shall conform to ASME B16.3. Steel pipe flanges and flanged fittings including bolts, nuts, and bolt pattern shall be in accordance with ASME B16.5. Wrought steel buttwelding fittings shall conform to ASME B16.9. Socket welding and threaded forged steel fittings shall conform to ASME B16.11.

2.1.7 Sealants for Steel Pipe Threaded Joints

Joint sealing compound shall be listed in UL Gas&Oil Dir, Class 20 or less. Tetrafluoroethylene tape shall conform to UL Gas&Oil Dir.

2.1.8 Identification

Pipe flow markings and metal tags shall be provided as required.

2.1.9 Flange Gaskets

Gaskets shall be nonasbestos compressed material in accordance with ASME B16.21, 1.6 mm (1/16 inch) thickness, full face or self-centering flat ring type. The gaskets shall contain aramid fibers bonded with styrene butadiene rubber (SBR) or nitrile butadiene rubber (NBR) suitable for a maximum 316 degrees C (600 degrees F) service. NBR binder shall be used for hydrocarbon service.

2.1.10 Pipe Threads

Pipe threads shall conform to ASME B1.20.1.

2.1.11 Escutcheons

Escutcheons shall be chromium-plated steel or chromium-plated brass, either one piece or split pattern, held in place by internal spring tension or set screw.

2.1.12 Gas Transition Fittings

Gas transition fittings shall be manufactured steel fittings approved for jointing metallic and thermoplastic or fiberglass pipe. Approved transition fittings are those that conform to AGA Mnl requirements for transitions fittings.

2.1.13 Insulating Pipe Joints

2.1.13.1 Insulating Joint Material

Insulating joint material shall be provided between flanged or threaded metallic pipe systems where shown to control galvanic or electrical action.

2.1.13.2 Threaded Pipe Joints

Joints for threaded pipe shall be steel body nut type dielectric unions with insulating gaskets.

2.1.13.3 Flanged Pipe Joints

Joints for flanged pipe shall consist of full face sandwich-type flange insulating gasket of the dielectric type, insulating sleeves for flange bolts, and insulating washers for flange nuts.

2.1.14 Flexible Connectors

Flexible connectors for connecting gas utilization equipment to building gas piping shall conform to ANSI Z21.45. Flexible connectors for movable food service equipment shall conform to ANSI Z21.69.

2.2 VALVES

Valves shall be suitable for shutoff or isolation service and shall conform to the following:

2.2.1 Valves 50 mm and Smaller

Valves 50 mm and smaller shall conform to ASME B16.33 and shall be of materials and manufacture compatible with system materials used.

2.2.2 Valves 65 mm and Larger

Valves 65 mm and larger shall be carbon steel conforming to API Spec 6D, Class 150.

2.3 PIPE HANGERS AND SUPPORTS

Pipe hangers and supports shall conform to MSS SP-58 and MSS SP-69.

2.4 METERS, REGULATORS AND SHUTOFF VALVES

Meters, regulators and shutoff valves shall be as specified in Section 02556GAS DISTRIBUTION SYSTEM.

PART 3 EXECUTION

3.1 EXCAVATION AND BACKFILLING

Earthwork shall be as specified in Section 02316 EXCAVATION, TRENCHING AND BACKFILLING FOR UTILITIES SYSTEMS.

3.2 GAS PIPING SYSTEM

Gas piping system shall be from the point of delivery, defined as the outlet of the meter set assembly , specified in Section 02556 GAS DISTRIBUTION SYSTEM, to the connections to each gas utilization device.

3.2.1 Protection of Materials and Components

Pipe and tube openings shall be closed with caps or plugs during installation. Equipment shall be protected from dirt, water, and chemical or mechanical damage. At the completion of all work, the entire system shall be thoroughly cleaned.

3.2.2 Workmanship and Defects

Piping, tubing and fittings shall be clear and free of cutting burrs and defects in structure or threading and shall be thoroughly brushed and chip-and scale-blown. Defects in piping, tubing or fittings shall not be repaired. When defective piping, tubing, or fittings are located in a system, the defective material shall be replaced.

3.3 PROTECTIVE COVERING

3.3.1 Underground Metallic Pipe

Buried metallic piping shall be protected from corrosion with protective coatings as specified in Section 02556 GAS DISTRIBUTION SYSTEM. When dissimilar metals are joined underground, gastight insulating fittings shall be used.

3.3.2 Aboveground Metallic Piping Systems

3.3.2.1 Ferrous Surfaces

Shop primed surfaces shall be touched up with ferrous metal primer. Surfaces that have not been shop primed shall be solvent cleaned. Surfaces that contain loose rust, loose mill scale and other foreign substances shall be mechanically cleaned by power wire and primed with ferrous metal primer. Primed surface shall be finished with two coats of exterior oil paint.

3.3.2.2 Nonferrous Surfaces

Except for aluminum alloy pipe, nonferrous surfaces shall not be painted. Surfaces of aluminum alloy pipe and fittings shall be painted to protect against external corrosion where they contact masonry, plaster, insulation, or are subject to repeated wettings by such liquids as water, detergents or sewage.

The surfaces shall be solvent-cleaned and treated with vinyl type wash coat. A first coat of aluminum paint and a second coat of alkyd gloss enamel or silicone alkyd copolymer enamel shall be applied.

3.4 INSTALLATION

Installation of the gas system shall be in conformance with the manufacturer's recommendations and applicable provisions of NFPA NFPA 54/ANSI Z223.1, AGA Mnl, and as indicated. Pipe cutting shall be done without damage to the pipe. Unless otherwise authorized, cutting shall be done by an approved type of mechanical cutter. Wheel cutters shall be used where practicable. On steel pipe 150 mm and larger, an approved gas cutting and beveling machine may be used. Cutting of thermoplastic and fiberglass pipe shall be in accordance with AGA Mnl.

3.4.1 Metallic Piping Installation

Underground piping shall be buried a minimum of 450 mm below grade. Changes in direction of piping shall be made with fittings only; mitering or notching pipe to form elbows and tees or other similar type construction will not be permitted. Branch connection may be made with either tees or forged branch outlet fittings. Branch outlet fittings shall be forged, flared for improvement of flow where attached to the run, and reinforced against external strains.

3.4.2 Metallic Tubing Installation

Metallic tubing shall be installed using gas tubing fittings approved by the tubing manufacturer. Branch connections shall be made with tees. All tubing end preparation shall be made with tools designed for the purpose. Aluminum alloy tubing shall not be used in exterior locations or underground.

3.4.4 Connections Between Metallic and Plastic Piping

Connections shall be made only outside, underground, and with approved transition fittings.

3.4.5 Piping Buried Under Buildings

Underground piping installed beneath buildings shall be run in a steel pipe casing protected from corrosion with protective coatings as specified in Section 02556 GAS DISTRIBUTION SYSTEM. The casing shall extend at least 100 mm outside the building. The pipe shall have spacers and end bushings to seal at both ends to prevent the entrance of water and escape of gas. A vent line from the annular space shall extend above grade outside to a point where gas will not be a hazard and shall terminate in a rain- and insect-resistant fitting.

3.4.6 Concealed Piping in Buildings

When installing piping which is to be concealed, unions, tubing fittings, running threads, right- and left-hand couplings, bushings, and swing joints made by combinations of fittings shall not be used.

3.4.6.1 Piping in Partitions

Concealed piping shall be located in hollow rather than solid partitions. Tubing passing through walls or partitions shall be protected against physical damage.

3.4.6.2 Piping in Floors

Piping in solid floors shall be laid in channels suitably covered to permit access to the piping with minimum damage to the building.

3.4.7 Aboveground Piping

Aboveground piping shall be run as straight as practicable along the alignment indicated and with a minimum of joints. Piping shall be separately supported. Exposed horizontal piping shall not be installed farther than 150 mm from nearest parallel wall in laundry areas where clothes hanging could be attempted.

3.4.8 Final Gas Connections

Unless otherwise specified, final connections shall be made with rigid metallic pipe and fittings. Flexible connectors may be used for final connections to gas utilization equipment.In addition to cautions listed in instructions required by ANSI standards for flexible connectors, insure that flexible connectors do not pass through equipment cabinet. Provide accessible gas shutoff valve and coupling for each gas equipment item.

3.5 PIPE JOINTS

Pipe joints shall be designed and installed to effectively sustain the longitudinal pull-out forces caused by contraction of the piping or superimposed loads.

3.5.1 Threaded Metallic Joints

Threaded joints in metallic pipe shall have tapered threads evenly cut and shall be made with UL approved graphite joint sealing compound for gas service or tetrafluoroethylene tape applied to the male threads only. Threaded joints up to 40 mm in diameter may be made with approved tetrafluoroethylene tape. Threaded joints up to 50 mm in diameter may be made with approved joint sealing compound. After cutting and before threading, pipe shall be reamed and burrs shall be removed. Caulking of threaded joints to stop or prevent leaks shall not be permitted.

3.5.2 Welded Metallic Joints

Beveling, alignment, heat treatment, and inspection of welds shall conform to ASME B31.2. Weld defects shall be removed and repairs made to the weld, or the weld joints shall be entirely removed and rewelded. After filler metal has been removed from its original package, it shall be protected or stored so that its characteristics or welding properties are not affected adversely. Electrodes that have been wetted or have lost any of their coating shall not be used.

3.5.6 Joining Thermoplastic or Fiberglass to Metallic Piping or Tubing

When compression type mechanical joints are used, the gasket material in the fittings shall be compatible with the plastic piping and with the gas in the system. An internal tubular rigid stiffener shall be used in conjunction with the fitting, and the stiffener shall be flush with end of the pipe or tubing and shall extend at least to the outside end of the compression fitting when installed. The stiffener shall be free of rough or sharp edges and shall not be a force fit in the plastic. A split tubular stiffener shall not be used.

3.6 PIPE SLEEVES

Pipes passing through concrete or masonry walls or concrete floors or roofs shall be provided with pipe sleeves fitted into place at the time of construction. Sleeves shall not be installed in structural members except where indicated or approved. All rectangular and square openings shall be as detailed. Each sleeve shall extend through its respective wall, floor or roof, and shall be cut flush with each surface, except in mechanical room floors not located on grade where clamping flanges or riser pipe clamps are used. Sleeves in mechanical room floors above grade shall extend at least 100 mm above finish floor. Unless otherwise indicated, sleeves shall be large enough to provide a minimum clearance of 6.4 mm all around the pipe. Sleeves in bearing walls, waterproofing membrane floors, and wet areas shall be steel pipe. Sleeves in nonbearing walls, floors, or ceilings may be steel pipe, galvanized sheet metal with lock-type longitudinal seam, or moisture-resistant fiber or plastic. For penetrations of fire walls, fire partitions and floors which are not on grade, the annular space between the pipe and sleeve shall be sealed with firestopping material and sealant that meet the requirement of Section 07840 FIRESTOPPING.

3.7 PIPES PENETRATING WATERPROOFING MEMBRANES

Pipes penetrating waterproofing membranes shall be installed as specified in Section 15400 PLUMBING, GENERAL PURPOSE.

3.8 FIRE SEAL

Penetrations of fire rated partitions, walls and floors shall be in accordance with Section 07840 FIRESTOPPING.

3.9 ESCUTCHEONS

Escutcheons shall be provided for all finished surfaces where gas piping passes through floors, walls, or ceilings except in boiler, utility, or equipment rooms.

3.10 SPECIAL REQUIREMENTS

Drips, grading of the lines, freeze protection, and branch outlet locations shall be as shown and shall conform to the requirements of NFPA 54.

3.11 BUILDING STRUCTURE

Building structure shall not be weakened by the installation of any gas piping. Beams or joists shall not be cut or notched.

3.12 PIPING SYSTEM SUPPORTS

Gas piping systems in buildings shall be supported with pipe hooks, metal pipe straps, bands or hangers suitable for the size of piping or tubing. Gas piping system shall not be supported by other piping. Spacing of supports in gas piping and tubing installations shall conform to the requirements of NFPA 54. The selection and application of supports in gas piping and tubing installations shall conform to the requirements of MSS SP-69. In the support of multiple pipe runs on a common base member, a clip or clamp shall be used where each pipe crosses the base support member. Spacing of the base support members shall not exceed the hanger and support spacing required for any of the individual pipes in the multiple pipe run. The clips or clamps shall be rigidly connected to the common base member. A clearance of 3.2 mm shall be provided between the pipe and clip or clamp for all piping which may be subjected to thermal expansion.

3.13 ELECTRICAL BONDING AND GROUNDING

A gas piping system within a building shall be electrically continuous and bonded to a grounding electrode as required by NFPA 70.

3.14 SHUTOFF VALVE

Main gas shutoff valve controlling the gas piping system shall be easily accessible for operation and shall be installed as indicated, protected from physical damage, and marked with a metal tag to clearly identify the piping system controlled.

3.16 TESTING

Before any section of a gas piping system is put into service, it shall be carefully tested to assure that it is gastight. Prior to testing, the system shall be blown out, cleaned and cleared of all foreign material. Each joint shall be tested by means of an approved gas detector, soap and water, or an equivalent nonflammable solution. Testing shall be completed before any work is covered, enclosed, or concealed. All testing of piping systems shall be done with due regard for the safety of employees and the public during the test. Bulkheads, anchorage and bracing suitably designed to resist test pressures shall be installed if necessary. Oxygen shall not be used as a testing medium.

3.16.1 Pressure Tests

Before appliances are connected, piping systems shall be filled with air or an inert gas and shall withstand a minimum pressure of 21 kPa gauge for a period of not less than 10 minutes as specified in NFPA NFPA 54/ANSI Z223.1 without showing any drop in pressure. Oxygen shall not be used. Pressure shall be measured with a mercury manometer, slope gauge, or an equivalent device so calibrated as to be read in increments of not greater than 1 kPa. The source of pressure shall be isolated before the pressure tests are made.

3.16.2 Pressure Tests for Liquified Petroleum Gas

Systems shall withstand the pressure test described above. When appliances are connected to the piping system, fuel gas shall be used for testing and appliances shall withstand a pressure of not less than 2.5 kPa nor more than 3.5 kPa for a period of not less than 10 minutes without showing any drop in pressure. Pressure shall be measured with a water manometer or an equivalent device calibrated to be read in increments of not greater than 20 Pa. The source of pressure shall be isolated before the pressure tests are made.

3.16.3 Test With Gas

Before turning gas under pressure into any piping, all openings from which gas can escape shall be closed. Immediately after turning on the gas, the piping system shall be checked for leakage by using a laboratory-certified gas meter, an appliance orifice, a manometer, or equivalent device. All testing shall conform to the requirements of NFPA NFPA 54/ANSI Z223.1. If leakage is recorded, the gas supply shall be shut off, the leak shall be repaired, and the tests repeated until all leaks have been stopped.

3.16.4 Purging

After testing is completed, and before connecting any appliances, all gas piping shall be fully purged. LPG piping tested using fuel gas with appliances connected does not require purging. Piping shall not be purged into the combustion chamber of an appliance. The open end of piping systems being purged shall not discharge into confined spaces or areas where there are ignition sources unless the safety precautions recommended in NFPA NFPA 54/ANSI Z223.1 are followed.

3.16.5 Labor, Materials and Equipment

All labor, materials and equipment necessary for conducting the testing and purging shall be furnished by the Contractor.

END OF SECTION

This page intentionally blank

SECTION 15400

PLUMBING, GENERAL PURPOSE

PART 1 GENERAL

1.1 REFERENCES

The publications listed below form a part of this specification to the extent referenced. The publications are referred to in the text by basic designation only.

AIR CONDITIONING AND REFRIGERATION INSTITUTE (ARI)

ARI 700	(1993) Specifications for Fluorocarbon and Other Refrigerants
ARI 1010	(1994) Drinking-Fountains and Self-Contained, Mechanically-Refrigerated Drinking-Water Coolers

AMERICAN NATIONAL STANDARDS INSTITUTE (ANSI)

ANSI Z21.10.3	(1993; Z21.10.3a) Gas Water Heaters Vol. III Storage, With Input Ratings Above 75,000 Btu Per Hour, Circulating and Instantaneous Water Heaters
ANSI Z21.22	(1986; Z21.22a) Relief Valves and Automatic Gas Shutoff Devices for Hot Water Supply Systems

AMERICAN SOCIETY FOR TESTING AND MATERIALS (ASTM)

ASTM A 47	(1990) Ferritic Malleable Iron Castings
ASTM A 53	(1993a) Pipe, Steel, Black and Hot-Dipped, Zinc-Coated Welded and Seamless
ASTM A 74	(1994) Cast Iron Soil Pipe and Fittings
ASTM A 105	(1995) Forgings, Carbon Steel, for Piping Components
ASTM A 183	(1983; R 1990) Carbon Steel Track Bolts and Nuts
ASTM A 193	(1996) Alloy-Steel and Stainless Steel Bolting Materials for High-Temperature Service
ASTM A 515	(1992) Pressure Vessel Plates, Carbon Steel, for Intermediate- and Higher-Temperature Service
ASTM A 516	(1990) Pressure Vessel Plates, Carbon Steel, for Moderate- and Lower-Temperature Service

ASTM A 536	(1984; R 1993) Ductile Iron Castings
ASTM A 733	(1993) Welded and Seamless Carbon Steel and Austenitic Stainless Steel Pipe Nipples
ASTM A 888	(1994) Hubless Cast Iron Soil Pipe and Fittings for Sanitary and Storm Drain, Waste, and Vent Piping Applications
ASTM B 32	(1995) Solder Metal
ASTM B 42	(1993) Seamless Copper Pipe, Standard Sizes
ASTM B 43	(1994) Seamless Red Brass Pipe, Standard Sizes
ASTM B 75	(1993) Seamless Copper Tube
ASTM B 88	(1993a) Seamless Copper Water Tube
ASTM B 111	(1993) Copper and Copper-Alloy Seamless Condenser Tubes and Ferrule Stock
ASTM B 152	(1994) Copper Sheet, Strip, Plate, and Rolled Bar
ASTM B 306	(1992) Copper Drainage Tube (DWV)
ASTM B 370	(1992) Copper Sheet and Strip for Building Construction
ASTM B 395	(1993) U-Bend Seamless Copper and Copper Alloy Heat Exchanger and Condenser Tubes
ASTM B 584	(1993b) Copper Alloy Sand Castings for General Applications
ASTM B 641	(1993) Seamless and Welded Copper Distribution Tube (Type D)
ASTM B 813	(1993) Liquid and Paste Fluxes for Soldering Applications of Copper and Copper Alloy Tube
ASTM B 828	(1992) Making Capillary Joints by Soldering of Copper and Copper-Alloy Tube & Fittings
ASTM C 564	(1994a) Rubber Gaskets for Cast Iron Soil Pipe and Fittings
ASTM C 920	(1987) Elastomeric Joint Sealants
ASTM D 638	(1994b) Tensile Properties of Plastics
ASTM D 1004	(1994a) Initial Tear Resistance of Plastic Film and Sheeting
ASTM D 1248	(1984; R 1989) Polyethylene Plastics Molding and Extrusion Materials

ASTM D 2000	(1990; R 1994) Rubber Products in Automotive Applications
ASTM D 2661	(1995) Acrylonitrile-Butadiene-Styrene (ABS) Schedule 40 Plastic Drain, Waste, and Vent Pipe and Fittings
ASTM D 2665	(1994) Poly(Vinyl Chloride) (PVC) Plastic Drain, Waste, and Vent Pipe and Fittings
ASTM D 2822	(1991) Asphalt Roof Cement
ASTM D 3138	(1993) Solvent Cements for Transition Joints Between Acrylonitrile-Butadiene-Styrene (ABS) and Poly(Vinyl Chloride) (PVC) Non-pressure Piping Components
ASTM D 3139	(1989; R 1995) Joints for Plastic Pressure Pipes Using Flexible Elastomeric Seals
ASTM D 3212	(1992) Joints for Drain and Sewer Plastic Pipes Using Flexible Elastomeric Seals
ASTM D 3308	(1991a) PTFE Resin Skived Tape
ASTM D 3311	(1994) Drain, Waste, and Vent (DWV) Plastic Fittings Patterns
ASTM D 4551	(1991) Poly(Vinyl Chloride) (PVC) Plastic Flexible Concealed Water-Containment Membrane
ASTM E 1	(1995) ASTM Thermometers
ASTM E 96	(1996) Water Vapor Transmission of Materials
ASTM F 409	(1993) Thermoplastic Accessible and Replaceable Plastic Tube and Tubular Fittings
ASTM F 477	(1993) Elastomeric Seals (Gaskets) for Joining Plastic Pipe
ASTM F 628	(1993) Acrylonitrile-Butadiene-Styrene (ABS) Schedule 40 Plastic Drain, Waste, and Vent Pipe with a Cellular Core
ASTM F 891	(1993a) Coextruded Poly(Vinyl Chloride) (PVC) Plastic Pipe with a Cellular Core

AMERICAN SOCIETY OF HEATING, REFRIGERATING AND AIR-CONDITIONING ENGINEERS (ASHRAE)

ASHRAE 34	(1994) Designation and Safety Classification of Refrigerants
ASHRAE 90.1	(1989; 90.1b; 90.1c; 90.1d; 90.1e; 90.1g; 90.1i) Energy Efficient Design of New Buildings Except Low-Rise Residential Buildings

AMERICAN SOCIETY OF MECHANICAL ENGINEERS (ASME)

ASME A112.1.2	(1991) Air Gaps in Plumbing Systems
ASME A112.6.1M	(1988) Supports for Off-the-Floor Plumbing Fixtures for Public Use
ASME A112.14.1	(1975; R 1990) Backwater Valves
ASME A112.18.1M	(1994; Errata Feb 1995) Plumbing Fixture Fittings
ASME A112.19.1M	(1994) Enameled Cast Iron Plumbing Fixtures
ASME A112.19.2M	(1990) Vitreous China Plumbing Fixtures
ASME A112.19.3M	(1987) Stainless Steel Plumbing Fixtures (Designed for Residential Use)
ASME A112.21.1M	(1991) Floor Drains
ASME A112.36.2M	(1991) Cleanouts
ASME B1.20.1	(1983; R 1992) Pipe Threads, General Purpose (Inch)
ASME B16.3	(1992) Malleable Iron Threaded Fittings
ASME B16.4	(1992) Cast Iron Threaded Fittings
ASME B16.5	(1988; Errata Oct 88; B16.5a) Pipe Flanges and Flanged Fittings
ASME B16.12	(1991) Cast Iron Threaded Drainage Fittings
ASME B16.15	(1985; R 1994) Cast Bronze Threaded Fittings Classes 125 and 250
ASME B16.18	(1984; R 1994) Cast Copper Alloy Solder Joint Pressure Fittings
ASME B16.21	(1992) Nonmetallic Flat Gaskets for Pipe Flanges
ASME B16.22	(1989) Wrought Copper and Copper Alloy Solder Joint Pressure Fittings
ASME B16.23	(1992; Errata Jan 1994) Cast Copper Alloy Solder Joint Drainage Fittings - DWV
ASME B16.24	(1991; Errata Jun 91) Cast Copper Alloy Pipe Flanges, Class 150, 300, 400, 600, 900, 1500 and 2500, and Flanged Fittings, Class 150 and 300
ASME B16.29	(1994) Wrought Copper and Wrought Copper Alloy Solder Joint Drainage Fittings - DWV
ASME B16.39	(1986; R 1994) Malleable Iron Threaded Pipe Unions Classes 150, 250, and 300
ASME B31.1	(1995) Power Piping
ASME B31.5	(1992; B31.5a) Refrigeration Piping

ASME B40.1	(1991) Gauges - Pressure Indicating Dial Type - Elastic Element
ASME BPV IX	(1995; Addenda Dec 1995) Boiler and Pressure Vessel Code; Section IX, Welding and Brazing Qualifications
ASME CSD-1	(1992; CSD-1a; CSD-1b) Controls and Safety Devices for Automatically Fired Boilers

AMERICAN SOCIETY OF SANITARY ENGINEERING (ASSE)

ASSE 1001	(1990) Pipe Applied Atmospheric Type Vacuum Breakers
ASSE 1002	(1992) Water Closet Flush Tank Ball Locks
ASSE 1003	(1981) Water Pressure Reducing Valves for Domestic Water Supply Systems
ASSE 1005	(1993) Water Heater Drain Valves - 3/4-Inch Iron Pipe Size
ASSE 1011	(1993) Hose Connection Vacuum Breakers
ASSE 1012	(1993) Backflow Preventers with Intermediate Atmospheric Vent
ASSE 1013	(1993) Reduced Pressure Principle Backflow Preventers
ASSE 1018	(1986) Trap Seal Primer Valves Water Supply Fed
ASSE 1037	(1990) Pressurized Flushing Devices (Flushometers) for Plumbing Fixtures/F

AMERICAN WATER WORKS ASSOCIATION (AWWA)

AWWA 10062J4	(1992) Standard Methods for the Examination of Water and Wastewater
AWWA B300	(1992) Hypochlorites
AWWA B301	(1992) Liquid Chlorine
AWWA C105	(1988) Polyethylene Encasement for Ductile-Iron Piping for Water and Other Liquids
AWWA C203	(1991) Coal-Tar Protective Coatings and Linings for Steel Water Pipelines - Enamel and Tape - Hot-Applied
AWWA C606	(1987) Grooved and Shouldered Joints
AWWA C700	(1995) Cold-Water Meters - Displacement Type, Bronze Main Case
AWWA M20	(1973) Manual: Water Chlorination Principles and Practices

AMERICAN WELDING SOCIETY (AWS)

AWS A5.8 (1992) Filler Metals for Brazing and Braze Welding

AWS B2.2 (1991) Brazing Procedure and Performance Qualification

CAST IRON SOIL PIPE INSTITUTE (CISPI)

CISPI 301 (1990) Hubless Cast Iron Soil Pipe and Fittings for Sanitary and Storm Drain, Waste, and Vent Piping Applications

CISPI HSN (1985) Neoprene Rubber Gaskets for Hub and Spigot Cast Iron Soil Pipe and Fittings

CODE OF FEDERAL REGULATIONS (CFR)

10 CFR 430 Energy Conservation Program for Consumer Products

21 CFR 175 Indirect Food Additives: Adhesives and Components of Coatings

COMMERCIAL ITEM DESCRIPTIONS (CID)

CID A-A-238 (Rev B) Seat, Water Closet

CID A-A-240 (Basic) Shower Head, Ball Joint

COPPER DEVELOPMENT ASSOCIATION (CDA)

CDA 404/0-RR (1992) Copper Brass Bronze Product Handbook, Copper Tube for Plumbing, Heating, Air Conditioning and Refrigeration

COUNCIL OF AMERICAN BUILDING OFFICIALS (CABO)

CABO A117.1 (1992; Errata Jun 1993) American National Standard for Accessible and Usable Buildings and Facilities

FOUNDATION FOR CROSS-CONNECTION CONTROL AND HYDRAULIC RESEARCH (FCCHR)

FCCHR-01 (1993) Manual of Cross-Connection Control

HYDRAULIC INSTITUTE (HI)

HI-01 (1983) Standards for Centrifugal, Rotary & Reciprocating Pumps

MANUFACTURERS STANDARDIZATION SOCIETY OF THE VALVE AND FITTINGS INDUSTRY (MSS)

MSS SP-25 (1993) Standard Marking System for Valves, Fittings, Flanges and Unions

MSS SP-44 (1991) Steel Pipe Line Flanges

MSS SP-58	(1993) Pipe Hangers and Supports - Materials, Design and Manufacture
MSS SP-67	(1995) Butterfly Valves
MSS SP-69	(1991) Pipe Hangers and Supports - Selection and Application
MSS SP-70	(1990) Cast Iron Gate Valves, Flanged and Threaded Ends
MSS SP-71	(1990) Cast Iron Swing Check Valves, Flanges and Threaded Ends
MSS SP-72	(1992) Ball Valves with Flanged or Butt-Welding Ends for General Service
MSS SP-73	(1991) Brazing Joints for Copper and Copper Alloy Pressure Fittings
MSS SP-78	(1987; R 1992) Cast Iron Plug Valves, Flanged and Threaded Ends
MSS SP-80	(1987) Bronze Gate, Globe, Angle and Check Valves
MSS SP-83	(1995) Class 3000 Steel Pipe Unions Socket-Welding and Threaded
MSS SP-84	(1990) Valves - Socket Welding and Threaded Ends
MSS SP-85	(1994) Cast Iron Globe & Angle Valves, Flanged and Threaded Ends
MSS SP-110	(1992) Ball Valves Threaded, Socket-Welding, Solder Joint, Grooved and Flared Ends

NATIONAL ASSOCIATION OF PLUMBING-HEATING-COOLING CONTRACTORS (NAPHCC)

NAPHCC-01	(1993; Supple 1994) National Standard Plumbing Code (Non-Illustrated Edition)
NAPHCC-02	(1993) National Standard Plumbing Code (Illustrated Edition)

NATIONAL ELECTRICAL MANUFACTURERS ASSOCIATION (NEMA)

NEMA 250	(1991) Enclosures for Electrical Equipment (1000 Volts Maximum)

NATIONAL FIRE PROTECTION ASSOCIATION (NFPA)

NFPA 54	(1999) National Fuel Gas Code
NFPA 90A	(1993) Installation of Air Conditioning and Ventilating Systems

NSF INTERNATIONAL (NSF)

NSF Std 14	(1965; Rev Nov 1990) Plastics Piping Components and Related Materials

PLASTIC PIPE AND FITTINGS ASSOCIATION (PPFA)

PPFA-01 (1991) Plastic Pipe in Fire Resistive Construction

PLUMBING AND DRAINAGE INSTITUTE (PDI)

PDI G-101 (1985) Testing and Rating Procedures for Grease Interceptors

PDI WH 201 (1992) Water Hammer Arresters

SOCIETY OF AUTOMOTIVE ENGINEERS (SAE)

SAE J1508 (1993) Hose Clamps

UNDERWRITERS LABORATORIES (UL)

UL 749 (1995) Household Dishwashers

1.2 STANDARD PRODUCTS

Specified materials and equipment shall be standard products of a manufacturer regularly engaged in the manufacture of such products. Specified equipment shall essentially duplicate equipment that has performed satisfactorily at least 2 years prior to bid opening.

1.3 PERFORMANCE REQUIREMENTS

1.3.1 Welding

Piping shall be welded in accordance with qualified procedures using performance-qualified welders and welding operators. Procedures and welders shall be qualified in accordance with ASME BPV IX. Welding procedures qualified by others, and welders and welding operators qualified by another employer, may be accepted as permitted by ASME B31.1. The Contracting Officer shall be notified 24 hours in advance of tests, and the tests shall be performed at the work site if practicable. Welders or welding operators shall apply their assigned symbols near each weld they make as a permanent record. Structural members shall be welded in accordance with Section 05055 WELDING, STRUCTURAL.

1.4 ELECTRICAL WORK

Motors, motor controllers and motor efficiencies shall conform to the requirements of Section 16415 ELECTRICAL WORK, INTERIOR. Electrical motor-driven equipment specified herein shall be provided complete with motors. Equipment shall be rated at 60 Hz, single phase, ac unless otherwise indicated. Where a motor controller is not provided in a motor-control center on the electrical drawings, a motor controller shall be as indicated. Motor controllers shall be provided complete with properly sized thermal-overload protection in each ungrounded conductor, auxiliary contact, and other equipment, at the specified capacity, and including an allowable service factor.

1.5 SUBMITTALS

Government approval is required for submittals with a "GA" designation; submittals having an "FIO" designation are for information only. The following shall be submitted in accordance with Section 01300 SUBMITTAL PROCEDURES:

SD-01 Data

Welding; FIO.

A copy of qualified procedures and a list of names and identification symbols of qualified welders and welding operators.

Vibration-Absorbing Features; FIO.

Details of vibration-absorbing features, including arrangement, foundation plan, dimensions and specifications.

SD-04 Drawings

Plumbing System; FIO.

Detail drawings consisting of illustrations, schedules, performance charts, instructions, brochures, diagrams, and other information to illustrate the requirements and operations of each system. Detail drawings for the complete plumbing system including piping layouts and locations of connections; dimensions for roughing-in, foundation, and support points; schematic diagrams and wiring diagrams or connection and interconnection diagrams. Detail drawings shall indicate clearances required for maintenance and operation. Where piping and equipment are to be supported other than as indicated, details shall include loadings and proposed support methods. Mechanical drawing plans, elevations, views, and details, shall be drawn to scale.

Electrical Schematics; FIO.

Complete electrical schematic lineless or full line interconnection and connection diagram for each piece of mechanical equipment having more than one automatic or manual electrical control device.

SD-06 Instructions

Plumbing System; FIO.

Diagrams, instructions, and other sheets proposed for posting. Manufacturer's recommendations for the installation of bell and spigot and hubless joints for cast iron soil pipe.

SD-09 Reports

Tests, Flushing and Sterilization; FIO.

Test reports in booklet form showing all field tests performed to adjust each component and all field tests performed to prove compliance with the specified performance criteria, completion and testing of the installed system. Each test report shall indicate the final position of controls.

SD-13 Certificates

Materials and Equipment; FIO.

Where materials or equipment are specified to comply with requirements of AGA, or ASME, proof of such compliance. The label or listing of the specified agency will be acceptable evidence. In lieu of the label or listing, a written certificate may be submitted from an approved, nationally recognized testing organization equipped to perform such services, stating that the items have been tested and conform to the requirements and testing methods of the specified agency. Where equipment is specified to conform to requirements of the ASME Boiler and Pressure Vessel Code, the design, fabrication, and installation shall conform to the code.

Bolts; FIO.

Written certification by the bolt manufacturer that the bolts furnished comply with the specified requirements. The certification shall include illustrations of product-required markings, the date of manufacture, and the number of each type of bolt to be furnished based on this certification.

SD-19 Operation and Maintenance Manuals

Plumbing System; FIO.

Six copies of the operation manual outlining the step-by-step procedures required for system startup, operation and shutdown. The manual shall include the manufacturer's name, model number, service manual, parts list, and brief description of all equipment and their basic operating features. Six copies of the maintenance manual listing routine maintenance procedures, possible breakdowns and repairs. The manual shall include piping and equipment layout and simplified wiring and control diagrams of the system as installed.

1.6 REGULATORY REQUIREMENTS

1.6.1 Plumbing

Plumbing work shall be in accordance with NAPHCC-01, unless otherwise stated and installed in accordance with NAPHCC-02.

1.7 PROJECT/SITE CONDITIONS

The Contractor shall become familiar with details of the work, verify dimensions in the field, and advise the Contracting Officer of any discrepancy before performing any work.

PART 2 PRODUCTS

2.1 MATERIALS

Materials for various services shall be in accordance with TABLES I and II. Pipe schedules shall be selected based on service requirements. Pipe fittings shall be compatible with the applicable pipe materials. Plastic pipe, fittings, and solvent cement shall meet NSF Std 14 and shall be NSF listed for the service intended. Pipe threads (except dry seal) shall conform to ASME B1.20.1. Grooved pipe couplings and fittings shall be from the same manufacturer. Material or equipment containing lead shall not be used in any potable water system. Hubless cast-iron soil pipe shall not be installed under concrete floor slabs or in crawl spaces below kitchen floors. Plastic pipe shall not be installed in air plenums any chase which contains supply, return, or exhaust ducts, lines which run to grease pits/traps, or lines from any equipment that empties hot water, 48.8 degrees C. Plastic pipe shall not be installed in a pressure piping systems.

2.1.1 Pipe Joint Materials

Grooved pipe shall not be used under ground. Joints and gasket materials shall conform to the following:

a. Coupling for Cast-Iron Pipe: ASTM A 74, AWWA C606.

b. Coupling for Steel Pipe: AWWA C606.

c. Couplings for Grooved Pipe: Ductile Iron ASTM A 536 (Grade 65-45-12).

d. Flange Gaskets: Gaskets shall be made of non-asbestos material in accordance with ASME B16.21. Gaskets shall be flat, 1.6 mm (1/16 inch) thick, and contain Aramid fibers bonded with Styrene Butadiene Rubber (SBR) or Nitro Butadiene Rubber (NBR). Gaskets shall be the full face or self centering flat ring type. Gaskets used for hydrocarbon service shall be bonded with NBR.

e. Neoprene Gaskets for Hub and Cast-Iron Pipe and Fittings: CISPI HSN.

f. Brazing Material: Brazing material shall conform to AWS A5.8, BCuP-5.

g. Brazing Flux: Flux shall be in paste or liquid form appropriate for use with brazing material. Flux shall be as follows: lead-free; have a 100 percent flushable residue; contain slightly acidic reagents; contain potassium borides; and contain fluorides. Silver brazing materials shall be in accordance with AWS A5.8.

h. Solder Material: Solder metal shall conform to ASTM B 32 95-5 tin antimony.

i. Solder Flux: Flux shall be liquid form, non-corrosive, and conform to ASTM B 813, Standard Test 1.

j. PTFE Tape: PTFE Tape, for use with Threaded Metal or Plastic Pipe, ASTM D 3308.

k. Rubber Gaskets for Cast-Iron Soil-Pipe and Fittings: ASTM C 564.

l. Rubber Gaskets for Grooved Pipe: ASTM D 2000, maximum temperature 110 degrees C (230 degrees F).

m. Flexible Elastomeric Seals: ASTM D 3139, ASTM D 3212 or ASTM F 477.

n. Bolts and Nuts for Grooved Pipe Couplings: Heat-treated carbon steel, ASTM A 183.

o. Solvent Cement for Transition Joints between ABS and PVC Nonpressure Piping Components: ASTM D 3138.

p. Omitted

q. Omitted

r. Omitted

s. Flanged fittings including flanges, bolts, nuts, bolt patterns, etc. shall be in accordance with ASME B16.5 class 150 and shall have the manufacturer's trademark affixed in accordance with MSS SP-25. Flange material shall conform to ASTM A 105. Blind flange material shall conform to ASTM A 516 cold service and ASTM A 515 for hot service. Bolts shall be high strength or intermediate strength with material conforming to ASTM A 193.

2.1.2 Miscellaneous Materials

Miscellaneous materials shall conform to the following:

a. Water Hammer Arrester: PDI WH 201.

b. Copper, Sheet and Strip for Building Construction: ASTM B 370.

c. Asphalt Roof Cement: ASTM D 2822.

d. Hose Clamps: SAE J1508.

e. Supports for Off-The-Floor Plumbing Fixtures: ASME A112.6.1M.

f. Metallic Cleanouts: ASME A112.36.2M.

g. Plumbing Fixture Setting Compound: A preformed flexible ring seal molded from hydrocarbon wax material. The seal material shall be nonvolatile nonasphaltic and contain germicide and provide watertight, gas tight, odor proof and vermin proof properties.

h. Coal-Tar Protective Coatings and Linings for Steel Water Pipelines: AWWA C203.

i. Hypochlorites: AWWA B300.

j. Liquid Chlorine: AWWA B301.

k. Polyethylene Encasement for Ductile-Iron Piping: AWWA C105.

l. Gauges - Pressure and Vacuum Indicating Dial Type - Elastic Element: ASME B40.1.

m. Thermometers: ASTM E 1.

2.1.3 Pipe Insulation Material

Insulation shall be as specified in Section 15080 THERMAL INSULATION FOR MECHANICAL SYSTEMS.

2.2 PIPE HANGERS, INSERTS, AND SUPPORTS

Pipe hangers, inserts, and supports shall conform to MSS SP-58 and MSS SP-69.

2.3 VALVES

Valves shall be provided on supplies to equipment and fixtures. Valves 65 mm (2-1/2 inches) and smaller shall be bronze with threaded bodies for pipe and solder-type connections for tubing. Valves 80 mm (3 inches) and larger shall have flanged iron bodies and bronze trim. Pressure ratings shall be based upon the application. Grooved end valves may be provided if the manufacturer certifies that the valves meet the performance requirements of applicable MSS standard. Valves shall conform to the following standards:

Description	Standard
Butterfly Valves	MSS SP-67
Cast-Iron Gate Valves, Flanged and Threaded Ends	MSS SP-70
Cast-Iron Swing Check Valves, Flanged and Threaded Ends	MSS SP-71
Ball Valves with Flanged Butt-Welding Ends for General Service	MSS SP-72
Ball Valves Threaded, Socket-Welding, Solder Joint, Grooved and Flared Ends	MSS SP-110
Cast-Iron Plug Valves, Flanged and Threaded Ends	MSS SP-78
Bronze Gate, Globe, Angle, and Check Valves	MSS SP-80
Steel Valves, Socket Welding and Threaded Ends	MSS SP-84
Cast-Iron Globe and Angle Valves, Flanged and Threaded Ends	MSS SP-85
Backwater Valves	ASME A112.14.1
Vacuum Relief Valves	ASSE 1001
Water Pressure Reducing Valves	ASSE 1003
Water Heater Drain Valves	ASSE 1005
Trap Seal Primer Valves	ASSE 1018
Temperature and Pressure Relief Valves for Hot Water Supply Systems	ANSI Z21.22
Temperature and Pressure Relief Valves for Automatically Fired Hot Water Boilers	ASME CSD-1 Safety Code No., Part CW, Article 5

2.3.1 Omitted

2.3.2 Omitted

2.3.3 Omitted

2.3.4 Omitted

2.3.5 Omitted

2.3.6 Relief Valves

Water heaters and hot water storage tanks shall have a combination pressure and temperature (P&T) relief valve. The pressure relief element of a P&T relief valve shall have adequate capacity to prevent excessive pressure build-up in the system when the system is operating at the maximum rate of heat input. The temperature element of a P&T relief valve shall have a relieving capacity which is at least equal to the total input of the heaters when operating at their maximum capacity. Relief valves shall be rated according to ANSI Z21.22. Relief valves for systems where the maximum rate of heat input is less than 59 kW shall have 20 mm nominal minimum inlets, and 20 mm nominal outlets. Relief valves for systems where the maximum rate of heat input is greater than 59 kW shall have 25 mm nominal minimum inlets, and 25 mm nominal outlets. The discharge pipe from the relief valve shall be the size of the valve outlet.

2.3.7 Thermostatic Mixing Valves

Mixing valves, thermostatic type, shall be line size and shall be constructed with rough or finish bodies either with or without plating. Each valve shall be constructed to control the mixing of hot and cold water and to deliver water at a desired temperature regardless of pressure or input temperature changes. The control element shall be of an approved type. The body shall be of heavy cast bronze, and interior parts shall be brass, bronze, or copper. The valve shall be equipped with necessary stops, check valves, unions, and sediment strainers on the inlets. Mixing valves shall maintain water temperature within 2 degrees C (5 degrees F) of any setting.

2.4 FIXTURES

Fixtures shall be water conservation type, in accordance with NAPHCC-01. Fixtures for use by the physically handicapped shall be in accordance with CABO A117.1. Vitreous china, nonabsorbent, hard-burned, and vitrified throughout the body shall be provided. Porcelain enameled ware shall have specially selected, clear white, acid-resisting enamel coating evenly applied on surfaces. No fixture will be accepted that shows cracks, crazes, blisters, thin spots, or other flaws. Fixtures shall be equipped with appurtenances such as traps, faucets, stop valves, and drain fittings. Each fixture and piece of equipment requiring connections to the drainage system, except grease interceptors, shall be equipped with a trap. Brass expansion or toggle bolts capped with acorn nuts shall be provided for supports, and polished chromium plated pipe, valves, and fittings shall be provided where exposed to view. Fixtures with the supply discharge below the rim shall be equipped with backflow preventers. Internal parts of flush and/or flushometer valves, shower mixing valves, shower head face plates, pop-up stoppers of lavatory waste drains, and pop-up stoppers and overflow tees and shoes of bathtub waste drains may contain acetal resin, fluorocarbon, nylon, acrylonitrile-butadiene-styrene (ABS) or other plastic material, if the material has provided satisfactory service under actual commercial or industrial operating conditions for not less than 2 years. Plastic in contact with hot water shall be suitable for 82 degrees C water temperature. Plumbing fixtures shall be as indicated in paragraph PLUMBING FIXTURE SCHEDULE.

2.4.1 Lavatories

Enameled cast-iron lavatories shall be provided with two cast-iron or steel brackets secured to the underside of the apron and drilled for bolting to the wall in a manner similar to the hanger plate. Exposed brackets shall be porcelain enameled.

2.5 BACKFLOW PREVENTERS

Backflow preventers shall be approves and listed by the Foundation For Cross Connection Control & Hydraulic Research. Reduced pressure principle assemblies, double check valve assemblies, atmospheric (nonpressure) type vacuum breakers, and pressure type vacuum breakers shall be tested, approved, and listed in accordance with FCCHR-01. Backflow preventers with intermediate atmospheric vent shall conform to ASSE 1012. Reduced pressure principle backflow preventers shall conform to ASSE 1013. Hose connection vacuum breakers shall conform to ASSE 1011. Pipe applied atmospheric type vacuum breakers shall conform to ASSE 1001. Air gaps in plumbing systems shall conform to ASME A112.1.2.

2.6 DRAINS

2.6.1 Floor and Shower Drains

Floor and shower drains shall consist of a galvanized body, integral seepage pan, and adjustable perforated or slotted chromium-plated bronze, nickel-bronze, or nickel-brass strainer, consisting of grate and threaded collar. Floor drains shall be cast iron except where metallic waterproofing membrane is installed. Drains shall be of double drainage pattern for embedding in the floor construction. The seepage pan shall have weep holes or channels for drainage to the drainpipe. The strainer shall be adjustable to floor thickness. A clamping device for attaching flashing or waterproofing membrane to the seepage pan without damaging the flashing or waterproofing membrane shall be provided when required. Drains shall be provided with threaded or caulked connection. In lieu of a caulked joint between the drain outlet and waste pipe, a neoprene rubber gasket conforming to ASTM C 564 may be installed, provided that the drain is specifically designed for the rubber gasket compression type joint. Floor and shower drains shall conform to ASME A112.21.1M.

2.6.1.1 Metallic Shower Pan Drains

Where metallic shower pan membrane is installed, polyethylene drain with corrosion-resistant screws securing the clamping device shall be provided. Polyethylene drains shall have fittings to adapt drain to waste piping. Polyethylene for floor drains shall conform to ASTM D 1248. Drains shall have separate cast-iron "P" trap, circular body, seepage pan, and strainer, unless otherwise indicated.

2.6.1.2 Drains

Drains installed in connection with waterproofed floors or shower pans shall be equipped with bolted-type device to securely clamp flashing.

2.6.2 Area Drains

Area drains shall be plain pattern with polished stainless steel perforated or slotted grate and bottom outlet. The drain shall be circular or square with a 300 mm nominal overall width or diameter and 250 mm nominal overall depth. Drains shall be cast iron with manufacturer's standard coating. Grate shall be easily lifted out for cleaning. Outlet shall be suitable for inside caulked connection to drain pipe. Drains shall conform to ASME A112.21.1M.

2.6.3 Omitted

2.6.4 Omitted

2.6.5 Omitted

2.6.6 Sight Drains

Sight drains shall consist of body, integral seepage pan, and adjustable strainer with perforated or slotted grate and funnel extension. The strainer shall have a threaded collar to permit adjustment to floor thickness. Drains shall be of double drainage pattern suitable for embedding in the floor construction. A clamping device for attaching flashing or waterproofing membrane to the seepage pan without damaging the flashing or membrane shall be provided for other than concrete construction. Drains shall have a galvanized heavy cast-iron body and seepage pan and chromium-plated bronze, nickel-bronze, or nickel-brass strainer and funnel combination. Drains shall be provided with threaded or caulked connection and with a separate cast-iron "P" trap, unless otherwise indicated. Drains shall be circular, unless otherwise indicated. The funnel shall be securely mounted over an opening in the center of the strainer. Minimum nominal dimensions shall be as follows:

Area of strainer and collar	0.023 square meters
Height of funnel	95 mm
Diameter of lower portion of funnel	50 mm
Diameter of upper portion of funnel	100 mm

2.7 SHOWER PAN

Shower pan may be copper, or nonmetallic material.

2.7.1 Sheet Copper

Sheet copper shall be 4.9 kg per square meter weight.

2.7.2 Plasticized Polyvinyl Chloride Shower Pan Material

Material shall be sheet form. The material shall be 1.016 mm minimum thickness of plasticized polyvinyl chloride or chlorinated polyethylene and shall be in accordance with ASTM D 4551.

2.7.3 Nonplasticized Polyvinyl Chloride (PVC) Shower Pan Material

Material shall consist of a plastic waterproofing membrane in sheet form. The material shall be 1.016 mm minimum thickness of nonplasticized PVC and shall have the following minimum properties:

a. ASTM D 638:

Ultimate Tensile Strength: 1.79 MPa

Ultimate Elongation: 398 percent
100 Percent Modulus: 3.07 MPa

b. ASTM D 1004:

Tear Strength: 53 kilonewtons per meter

c. ASTM E 96:

Permeance: 0.46 ng per Pa per second per square meter

d. Other Properties:

Specific Gravity: 1.29
PVC Solvent: Weldable
Cold Crack: minus 47 degrees C
Dimensional stability,
100 degrees C
Hardness, Shore A: 89

2.8 TRAPS

Unless otherwise specified, traps shall be plastic per ASTM F 409 or copper alloy adjustable tube type with slip joint inlet and swivel. Traps shall be without a cleanout. Tubes shall be copper alloy with walls not less than 0.813 mm thick within commercial tolerances, except on the outside of bends where the thickness may be reduced slightly in manufacture by usual commercial methods. Inlets shall have rubber washer and copper alloy nuts for slip joints above the discharge level. Swivel joints shall be below the discharge level and shall be of metal-to-metal or metal-to-plastic type as required for the application. Nuts shall have flats for wrench grip. Outlets shall have internal pipe thread, except that when required for the application, the outlets shall have sockets for solder-joint connections. The depth of the water seal shall be not less than 50 mm. The interior diameter shall be not more than 3.2 mm over or under the nominal size, and interior surfaces shall be reasonably smooth throughout. A copper alloy "P" trap assembly consisting of an adjustable "P" trap and threaded trap wall nipple with cast brass wall flange shall be provided for lavatories. The assembly shall be a standard manufactured unit and may have a rubber-gasketed swivel joint. Provide all floor drains with trap primes.

2.9 OMITTED

2.10 WATER HEATER

Pressure pipe shall have protective coating, a cathodic protection system, and joint bonding. Pipe, fittings, and joints shall have a protective coating. The protective coating shall be completely encasing polyethylene tube or sheet in accordance with AWWA C105. Joints and fittings shall be cleaned, coated with primer, and wrapped with tape. The pipe shall be cleaned, coated, and wrapped prior to pipe tightness testing. Joints and fittings shall be cleaned, coated, and wrapped after pipe tightness testing. Tape shall conform to AWWA C203 and shall be applied with a 50 percent overlap. Primer shall be as recommended by the tape manufacturer.

2.10.1 Automatic Storage Type

Heaters shall be complete with control system and shall have ASME rated combination pressure and temperature relief valve.

2.10.2 Omitted

2.10.3 Gas-Fired Type

Gas-fired water heaters shall conform to ANSI Z21.10.1 when input is 22 kW (75,000 Btu per hour) or less or ANSI Z21.10.3 for heaters with input greater than 22 kW (75,000 Btu per hour).

2.10.4 Indirect Heater Type

High temperature hot water (HTHW) heaters shall be the assembled product of one manufacturer, and be ASME tested and "U" stamped to code requirements under ASME BPV VIII Div 1. The storage tank shall be as specified in paragraph HOT-WATER STORAGE TANKS. The coil shall be as specified.

a. HTHW Energy Source: The heater element shall have a working pressure of 2758 kPa (400 psig) with water at a temperature of 204 degrees C. The heating surface (see 6.2 and 6.8) shall be based on 0.093 square meter of heating surface to heat 76 L or more of water in 1 hour from 4 to 82 degrees C using hot water at a temperature of 178 degrees C. Tubing shall conform to ASTM B 111, dopper alloy No. 706 (90-10 copper-nickel). Heating elements shall withstand an internal hydrostatic pressure of 4137 kPa for not less than 15 seconds without leaking or any evidence of damage.

b. The coil shall be “double-walled” tube-in-tube construction in accordance with the National Standard Plumbing Code. The double wall heat exchanger shall be suitable for potable water systems. Coils shall be u-tube type to provide domestic hot water at 60 degrees C when supplied with high temperature hot water at the temperature indicated. Coils shall be constructed in accordance with ASME-16 and certified with ASME stamp secured to unit. Coils shall be completely removable for cleaning and tube replacement and shall be free to expand. Coils shall be designed for 400 psig working pressure and an operating temperature of 232 degrees C. Water pressure loss through clean tubes shall not exceed 6 psig unless otherwise indicated. Minimum water velocity in tubes shall be 1 fps and assure turbulent flow. Tubes shall be copper-nickel or inhibited admiralty, constructed in accordance with ASTM B 395, suitable for the temperatures and pressures specified. Tubes shall not less than 20 mm.

2.10.5 Phenolic Resin Coatings

The phenolic resin coating shall be applied at either the coil or coating manufacturer's factory. The coil shall be chemically cleaned to remove any scale if present and to etch the metal surface. The exposed exterior surface of the coil shall be abrasively cleaned to white metal blast in accordance with SSPC SP 5. The coating shall be a product specifically intended for use on the material the water heating coils are made of. Steel, copper, copper alloy, or stainless steel coatings shall be capable of withstanding temperatures up to 204 degrees C dry bulb; and meet the requirements of 21 CFR 175. The entire exterior surface and the first 125 mm to 200 mm inside the tubes of each coil shall be coated with three component phenolic resin coating system. The system shall consist of the following: wash primer,

pigmented base coat, the clear top coat. Immediate and final cure times and temperatures shall be as recommended by the coating manufacturer.

2.10.5.1 Wash Primer

The wash primer shall be composed of a combination of polyvinyl butyral and a heat hardening phenolic resin. The weight per liter shall be between 0.8388 kg per liter minimum and 0.8867 kg per liter maximum.

2.10.5.2 Pigmented Base Coat

The pigmented baking phenolic base coat shall consist of heat hardening phenolic resins, suitable pigments of the earth type, and softening agents, and shall not contain drying oils or cellulose material. The weight per liter shall be between 1.2 kg per liter minimum and 1.3 kg per liter maximum. The non-volatile solids content shall be between 60 percent minimum and 64 percent maximum by weight.

2.10.5.3 Clear Top Coat

The clear non-pigmented baking phenolic top coat shall have a weight per liter (gallon) (gallon) of between 1.0 kg per liter minimum and 1.1 kg per liter maximum. The non-volatile solids content shall be between 48 percent minimum and 52 percent maximum by weight.

2.11 HOT-WATER STORAGE TANKS

Hot-water storage tanks shall be constructed by one manufacturer, ASME stamped for the working pressure, and shall have the National Board (ASME) registration. The standby heat loss shall conform to TABLE III as determined by the requirements of ASHRAE 90.1. Each tank shall be equipped with a thermometer, conforming to ASTM E 1, Type I, Class 3, Range C, style and form as required for the installation, and with 175 mm nominal scale. Thermometer shall have a separable socket suitable for a 20 mm nominal tapped opening. Tanks shall be equipped with pressure gauge. Insulation shall be as specified in Section 15080 THERMAL INSULATION FOR MECHANICAL SYSTEMS.

2.12 PUMPS

2.12.1 Omitted

2.12.2 Circulating Pumps

Domestic hot water circulating pumps shall be electrically driven, single-stage, centrifugal, with mechanical seals, suitable for the intended service. Pump capacities, efficiencies, motor sizes, speeds, and impeller types shall be as shown. Pump and motor shall be supported by the piping on which it is installed. The shaft shall be one-piece, heat-treated, corrosion-resisting steel with impeller and smooth-surfaced housing of bronze. Motor shall be totally enclosed, fan-cooled and shall have sufficient wattage (horsepower) for the service required. Pump shall conform to HI-01. Each pump motor shall be equipped with an across-the-line magnetic controller in a NEMA 250, Type 1 enclosure with "START-STOP" switch in cover. Pump motors smaller than 746 W (fractional horsepower pump motors) shall have integral thermal overload protection in accordance with Section 16415 ELECTRICAL WORK, INTERIOR. Guards shall shield exposed moving parts.

2.12.3 Omitted

2.12.4 Flexible Connectors

Flexible connectors shall be provided at the suction and discharge of each pump that is 1 hp or larger. Connectors shall be constructed of neoprene, rubber, or braided bronze, with Class 150 standard flanges. Flexible connectors shall be line size and suitable for the pressure and temperature of the intended service.

2.13 OMITTED

2.14 OMITTED

2.15 DOMESTIC WATER SERVICE METER

Cold water meter shall be of the positive displacement type conforming to AWWA C700. Meter register may be round or straight reading type. Meter shall be provided with a pulse generator, remote readout register and all necessary wiring and accessories.

PART 3 EXECUTION

3.1 GENERAL INSTALLATION REQUIREMENTS

Hubless cast-iron pipe shall not be installed under concrete floor slabs. Piping located in air plenums or fire rated shafts shall conform to NFPA 90A requirements. Piping located in fire rated shafts which constitute air ducts or enclose air ducts shall be noncombustible. Unprotected plastic pipe shall not be installed in air plenum. Installation of plastic pipe where in compliance with NFPA may be installed in accordance with PPFA-01. The plumbing system shall be installed complete with necessary fixtures, fittings, traps, valves, and accessories. Water and drainage piping shall be extended 1.5 m outside the building, unless otherwise indicated. A gate valve and drain shall be installed on the water service line inside the building approximately 150 mm above the floor from point of entry. Piping shall be connected to the exterior service lines or capped or plugged if the exterior service is not in place. Sewer and water pipes shall be laid in separate trenches, except when otherwise shown. Exterior underground utilities shall be at least 300 mm below the average local frost depth or as indicated on the drawings. If trenches are closed or the pipes are otherwise covered before being connected to the service lines, the location of the end of each plumbing utility shall be marked with a stake or other acceptable means. Valves shall be installed with control no lower than the valve body.

3.1.1 Water Pipe, Fittings, and Connections

3.1.1.1 Utilities

The piping shall be extended to fixtures, outlets, and equipment. The hot-water and cold-water piping system shall be arranged and installed to permit draining. The supply line to each item of equipment or fixture, except faucets, flush valves, or other control valves which are supplied with integral stops, shall be equipped with a shutoff valve to enable isolation of the item for repair and maintenance without interfering

with operation of other equipment or fixtures. Supply piping to fixtures, faucets, hydrants, shower heads, and flushing devices shall be anchored to prevent movement.

3.1.1.2 Cutting and Repairing

The work shall be carefully laid out in advance, and unnecessary cutting of construction shall be avoided. Damage to building, piping, wiring, or equipment as a result of cutting shall be repaired by mechanics skilled in the trade involved.

3.1.1.3 Protection of Fixtures, Materials, and Equipment

Pipe openings shall be closed with caps or plugs during installation. Fixtures and equipment shall be tightly covered and protected against dirt, water, chemicals, and mechanical injury. Upon completion of the work, the fixtures, materials, and equipment shall be thoroughly cleaned, adjusted, and operated. Safety guards shall be provided for exposed rotating equipment.

3.1.1.4 Mains, Branches, and Runouts

Piping shall be installed as indicated. Pipe shall be accurately cut and worked into place without springing or forcing. Structural portions of the building shall not be weakened. Aboveground piping shall run parallel with the lines of the building, unless otherwise indicated. Branch pipes from service lines may be taken from top, bottom, or side of main, using crossover fittings required by structural or installation conditions. Supply pipes, valves, and fittings shall be kept a sufficient distance from other work and other services to permit not less than 15 mm between finished covering on the different services. Bare and insulated water lines shall not bear directly against building structural elements so as to transmit sound to the structure or to prevent flexible movement of the lines. Water pipe shall not be buried in or under floors. Changes in pipe sizes shall be made with reducing fittings. Use of bushings will not be permitted except for use in situations in which standard factory fabricated components are furnished to accommodate specific excepted installation practice. Change in direction shall be made with fittings, except that bending of pipe 100 mm nominal and smaller will be permitted, provided a pipe bender is used and wide sweep bends are formed. The center-line radius of bends shall be not less than 6 diameters of the pipe. Bent pipe showing kinks, wrinkles, flattening, or other malformations will not be acceptable.

3.1.1.5 Pipe Drains

Pipe drains indicated shall consist of 20 mm nominal hose bibb with renewable seat and gate valve ahead of hose bibb. At other low points, 20 mm nominal brass plugs or caps shall be provided. Disconnection of the supply piping at the fixture is an acceptable drain.

3.1.1.6 Expansion and Contraction of Piping

Allowance shall be made throughout for expansion and contraction of water pipe. Each hot-water and hot-water circulation riser shall have expansion loops or other provisions such as offsets, changes in direction, etc., where indicated and/or required. Risers shall be securely anchored as required or where indicated to force expansion to loops. Branch connections from risers shall be made with ample swing or offset to avoid undue strain on fittings or short pipe lengths. Horizontal runs of pipe over 15 m in length shall be anchored to the wall or the supporting construction about midway on the run to force expansion,

evenly divided, toward the ends. Sufficient flexibility shall be provided on branch runouts from mains and risers to provide for expansion and contraction of piping. Flexibility shall be provided by installing one or more turns in the line so that piping will spring enough to allow for expansion without straining. If mechanical grooved pipe coupling systems are provided, the deviation from design requirements for expansion and contraction may be allowed pending approval of Contracting Officer.

3.1.1.7 Commercial-Type Water Hammer Arresters

Commercial-type water hammer arresters shall be provided on hot- and cold-water supplies and shall be located as generally indicated, with precise location and sizing to be in accordance with PDI WH 201. Water hammer arresters, where concealed, shall be accessible by means of access doors or removable panels. Commercial-type water hammer arresters shall conform to PDI WH 201. Vertical capped pipe columns will not be permitted.

3.1.2 Omitted

3.1.3 Joints

Installation of pipe and fittings shall be made in accordance with the manufacturer's recommendations. Mitering of joints for elbows and notching of straight runs of pipe for tees will not be permitted. Joints shall be made up with fittings of compatible material and made for the specific purpose intended.

3.1.3.1 Threaded

Threaded joints shall have American Standard taper pipe threads conforming to ASME B1.20.1. Only male pipe threads shall be coated with graphite or with an approved graphite compound, or with an inert filler and oil, or shall have a polytetrafluoroethylene tape applied.

3.1.3.2 Mechanical Couplings

Grooved mechanical joints shall be prepared according to the coupling manufacturer's instructions. Pipe and groove dimensions shall comply with the tolerances specified by the coupling manufacturer. The diameter of grooves made in the field shall be measured using a "go/no-go" gauge, vernier or dial caliper, or narrow-land micrometer. Groove width and dimension of groove from end of the pipe shall be measured and recorded for each change in grooving tool setup to verify compliance with coupling manufacturer's tolerances. Grooved joints shall not be used in concealed locations.

3.1.3.3 Union and Flanged

Unions, flanges and mechanical couplings shall not be concealed in walls, ceilings, or partitions. Unions shall be used on pipe sizes 65 mm nominal and smaller; flanges shall be used on pipe sizes 80 mm nominal and larger.

3.1.3.4 Cast Iron Soil, Waste and Vent Pipe

Bell and spigot compression and hubless gasketed clamp joints for soil, waste and vent piping shall be installed per the manufacturer's recommendations.

3.1.3.5 Copper Tube and Pipe

The tube or fittings shall not be annealed when making connections. Connections shall be made with a multiflame torch.

a. Brazed. Brazed joints shall be made in conformance with AWS B2.2, MSS SP-73, and CDA 404/O-RR with flux and are acceptable for line sizes. Copper to copper joints shall include the use of copper-phosphorus or copperphosphorus-silver brazing metal without flux. Brazing of dissimilar metals (copper to bronze or brass) shall include the use of flux with either a copper-phosphorus, copper-phosphorus-silver or a silver brazing filler metal.

b. Soldered. Soldered joints shall be made with flux and are only acceptable for lines 50 mm nominal and smaller. Soldered joints shall conform to ASME B31.5 and CDA 404/O-RR.

c. Copper Tube Extracted Joint. An extracted mechanical joint may be made in copper tube. Joint shall be produced with an appropriate tool by drilling a pilot hole and drawing out the tube surface to form a collar having a minimum height of three times the thickness of the tube wall. To prevent the branch tube from being inserted beyond the depth of the extracted joint, dimpled depth stops shall be provided. Branch tube shall be notched for proper penetration into fitting to ensure a free flow joint. Extracted joints shall be brazed in accordance with NAPHCC-01 using B-Cup series filler metal in accordance with MSS SP-73. Soldered extracted joints will not be permitted.

3.1.3.6 Plastic Pipe

Acrylonitrile-Butadiene-Styrene (ABS) pipe shall have joints made with solvent cement. PVC pipe shall have joints made with solvent cement elastomeric, threading, (threading of Schedule 80 Pipe is allowed only where required for disconnection and inspection; threading of Schedule 40 Pipe is not allowed), or mated flanged.

3.1.4 Dissimilar Pipe Materials

Connections between ferrous and non-ferrous copper pipe shall be made with dielectric unions or flange waterways. Connecting joints between plastic and metallic pipe shall be made with transition fitting for the specific purpose.

3.1.5 Corrosion Protection for Buried Pipe and Fittings

3.1.5.1 Cast Iron and Ductile Iron

Pressure pipe shall have protective coating, a cathodic protection system, and joint bonding. Pipe, fittings, and joints shall have a protective coating. The protective coating shall be completely encasing polyethylene tube or sheet in accordance with AWWA C105. Joints and fittings shall be cleaned, coated with primer, and wrapped with tape. The pipe shall be cleaned, coated, and wrapped prior to pipe tightness testing. Joints and fittings shall be cleaned, coated, and wrapped after pipe tightness testing. Tape shall conform to AWWA C203 and shall be applied with a 50 percent overlap. Primer shall be as recommended by the tape manufacturer.

3.1.5.2 Steel

Steel pipe, joints, and fittings shall be cleaned, coated with primer, and wrapped with tape. Pipe shall be cleaned, coated, and wrapped prior to pipe tightness testing. Joints and fittings shall be cleaned, coated, and wrapped after pipe tightness testing. Tape shall conform to AWWA C203 and shall be applied with a 50 percent overlap. Primer shall be as recommended by the tape manufacturer.

3.1.6 Pipe Sleeves and Flashing

Pipe sleeves shall be furnished and set in their proper and permanent location.

3.1.6.1 Sleeve Requirements

Pipes passing through concrete or masonry walls or concrete floors or roofs shall be provided with pipe sleeves fitted into place at the time of construction. Sleeves are not required for cast-iron soil pipe passing through concrete slab on grade, except where penetrating a membrane waterproof floor. A modular mechanical type sealing assembly may be installed in lieu of a waterproofing clamping flange and caulking and sealing of annular space between pipe and sleeve. The seals shall consist of interlocking synthetic rubber links shaped to continuously fill the annular space between the pipe and sleeve with corrosion-protected carbon steel bolts, nuts, and pressure plates. The links shall be loosely assembled with bolts to form a continuous rubber belt around the pipe with a pressure plate under each bolt head and each nut. After the seal assembly is properly positioned in the sleeve, tightening of the bolt shall cause the rubber sealing elements to expand and provide a watertight seal between the pipe and the sleeve. Each seal assembly shall be sized as recommended by the manufacturer to fit the pipe and sleeve involved. Sleeves shall not be installed in structural members, except where indicated or approved. Rectangular and square openings shall be as detailed. Each sleeve shall extend through its respective floor, or roof, and shall be cut flush with each surface, except for special circumstances. Pipe sleeves passing through floors in wet areas such as mechanical equipment rooms, lavatories, kitchens, and other plumbing fixture areas shall extend a minimum of 100 mm above the finished floor. Unless otherwise indicated, sleeves shall be of a size to provide a minimum of 6 mm clearance between bare pipe and inside of sleeve or between jacket over insulation and sleeves. Sleeves in bearing walls shall be steel pipe or cast-iron pipe. Sleeves for membrane waterproof floors shall be steel pipe, cast-iron pipe, or plastic pipe. Membrane clamping devices shall be provided on pipe sleeves for waterproof floors. Sleeves in nonbearing walls or ceilings may be steel pipe, cast-iron pipe, galvanized sheet metal with lock-type longitudinal seam, or moisture-resistant fiber or plastic. Plastic sleeves shall not be used in nonbearing fire walls, roofs, or floor/ceilings. Except as otherwise specified, the annular space between pipe and sleeve, or between jacket over insulation and sleeve, shall be sealed as indicated with sealants conforming to ASTM C 920 and with a primer, backstop material and surface preparation as specified in Section 07920 JOINT SEALING. Pipes passing through sleeves in concrete floors over crawl spaces shall be sealed as specified above. The annular space between pipe and sleeve or between jacket over insulation and sleeve shall not be sealed for interior walls which are not designated as fire rated. Sleeves through below-grade walls in contact with earth shall be recessed 15 mm from wall surfaces on both sides. Annular space between pipe and sleeve shall be filled with backing material and sealants in the joint between the pipe and concrete or masonry wall as specified above. Sealant selected for the earth side of the wall shall be compatible with dampproofing/waterproofing materials that are to be applied over the joint sealant.

3.1.6.2 Flashing Requirements

Pipes passing through roof or floor waterproofing membrane shall be installed through a 4.9 kg per square meter copper flashing, each within an integral skirt or flange. Flashing shall be suitably formed, and the skirt or flange shall extend not less than 200 mm from the pipe and shall be set over the roof or floor membrane in a solid coating of bituminous cement. The flashing shall extend up the pipe a minimum of 250 mm. For cleanouts, the flashing shall be turned down into the hub and caulked after placing the ferrule. Pipes passing through pitched roofs shall be flashed, using lead or copper flashing, with an adjustable integral flange of adequate size to extend not less than 200 mm from the pipe in all directions and lapped into the roofing to provide a watertight seal. The annular space between the flashing and the bare pipe or between the flashing and the metal-jacket-covered insulation shall be sealed as indicated. Flashing for dry vents shall be turned down into the pipe to form a waterproof joint. Pipes, up to and including 250 mm nominal in diameter, passing through roof or floor waterproofing membrane may be installed through a cast-iron sleeve with caulking recess, anchor lugs, flashing-clamp device, and pressure ring with brass bolts. Flashing shield shall be fitted into the sleeve clamping device. Pipes passing through wall waterproofing membrane shall be sleeved as described above. A waterproofing clamping flange shall be installed.

3.1.6.3 Waterproofing

Waterproofing at floor-mounted water closets shall be accomplished by forming a flashing guard from soft-tempered sheet copper. The center of the sheet shall be perforated and turned down approximately 40 mm to fit between the outside diameter of the drainpipe and the inside diameter of the cast-iron or steel pipe sleeve. The turned-down portion of the flashing guard shall be embedded in sealant to a depth of approximately 40 mm; then the sealant shall be finished off flush to floor level between the flashing guard and drainpipe. The flashing guard of sheet copper shall extend not less than 200 mm from the drainpipe and shall be lapped between the floor membrane in a solid coating of bituminous cement. If cast-iron water closet floor flanges are used, the space between the pipe sleeve and drainpipe shall be sealed with sealant and the flashing guard shall be upturned approximately 40 mm to fit the outside diameter of the drainpipe and the inside diameter of the water closet floor flange. The upturned portion of the sheet fitted into the floor flange shall be sealed.

3.1.6.4 Optional Counterflashing

Instead of turning the flashing down into a dry vent pipe, or caulking and sealing the annular space between the pipe and flashing or metal-jacket-covered insulation and flashing, counterflashing may be accomplished by utilizing the following:

a. A standard roof coupling for threaded pipe up to 150 mm nominal in diameter.

b. A tack-welded or banded-metal rain shield around the pipe.

3.1.6.5 Pipe Penetrations of Slab on Grade Floors

Where pipes, fixture drains, floor drains, cleanouts or similar items penetrate slab on grade floors, except at penetrations of floors with waterproofing membrane as specified in paragraphs Flashing Requirements

and Waterproofing, a groove 6 to 13 mm wide by 6 to 10 mm deep shall be formed around the pipe, fitting or drain. The groove shall be filled with a sealant as specified in Section 07920 JOINT SEALING.

3.1.7 Fire Seal

Where pipes pass through fire walls, fire-partitions, fire-rated pipe chase walls or floors above grade, a fire seal shall be provided as specified in Section 07270 FIRESTOPPING.

3.1.8 Supports

3.1.8.1 General

Hangers used to support piping 50 mm nominal and larger shall be fabricated to permit adequate adjustment after erection while still supporting the load. Pipe guides and anchors shall be installed to keep pipes in accurate alignment, to direct the expansion movement, and to prevent buckling, swaying, and undue strain. Piping subjected to vertical movement when operating temperatures exceed ambient temperatures shall be supported by variable spring hangers and supports or by constant support hangers. In the support of multiple pipe runs on a common base member, a clip or clamp shall be used where each pipe crosses the base support member. Spacing of the base support members shall not exceed the hanger and support spacing required for an individual pipe in the multiple pipe run.

3.1.8.2 Pipe Supports and Structural Bracing, Seismic Requirements

Piping and attached valves shall be supported and braced to resist seismic loads as specified in Section 13080 SEISMIC PROTECTION FOR MECHANICAL, ELECTRICAL EQUIPMENT. Structural steel required for reinforcement to properly support piping, headers, and equipment, but not shown, shall be provided. Material used for supports shall be as specified in Section 05120 STRUCTURAL STEEL.

3.1.8.3 Pipe Hangers, Inserts, and Supports

Installation of pipe hangers, inserts and supports shall conform to MSS SP-58 and MSS SP-69, except as modified herein.

a. Types 5, 12, and 26 shall not be used.

b. Type 3 shall not be used on insulated pipe.

c. Type 18 inserts shall be secured to concrete forms before concrete is placed. Continuous inserts which allow more adjustment may be used if they otherwise meet the requirements for type 18 inserts.

d. Type 19 and 23 C-clamps shall be torqued per MSS SP-69 and shall have both locknuts and retaining devices furnished by the manufacturer. Field-fabricated C-clamp bodies or retaining devices are not acceptable.

e. Type 20 attachments used on angles and channels shall be furnished with an added malleable-iron heel plate or adapter.

f. Type 24 may be used only on trapeze hanger systems or on fabricated frames.

g. Type 39 saddles shall be used on insulated pipe 100 mm nominal and larger when the temperature of the medium is 15 degrees C or higher. Type 39 saddles shall be welded to the pipe.

h. Type 40 shields shall:

(1) Be used on insulated pipe less than 100 mm nominal.

(2) Be used on insulated pipe 100 mm nominal and larger when the temperature of the medium is 15 degrees C or less.

(3) Have a high density insert for pipe 50 mm and larger and for smaller pipe sizes when the insulation is suspected of being visibly compressed, or distorted at or near the shield/insulation interface. High density inserts shall have a density of 128 kg per cubic meter or greater.

i. Horizontal pipe supports shall be spaced as specified in MSS SP-69 and a support shall be installed not over 300 mm from the pipe fitting joint at each change in direction of the piping. Pipe supports shall be spaced not over 1.5 m apart at valves. Operating temperatures in determining hanger spacing for PVC shall be 49 degrees C. Horizontal pipe runs shall include allowances for expansion and contraction.

j. Vertical pipe shall be supported at each floor, except at slab-ongrade, at intervals of not more than 4.5 m nor more than 2 m from end of risers, and at vent terminations. Vertical pipe risers shall include allowances for expansion and contraction.

k. Type 40 shields used on insulated pipe shall have high density inserts with a density of 128 kg per cubic meter or greater.

l. Type 35 guides using steel, reinforced polytetrafluoroethylene (PTFE) or graphite slides shall be provided to allow longitudinal pipe movement. Slide materials shall be suitable for the system operating temperatures, atmospheric conditions, and bearing loads encountered. Lateral restraints shall be provided as needed. Where steel slides do not require provisions for lateral restraint the following may be used:

(1) On pipe 100 mm nominal and larger when the temperature of the medium is 15 degrees C or higher, a Type 39 saddle, welded to the pipe, may freely rest on a steel plate.

(2) On pipe less than 100 mm nominal a Type 40 shield, attached to the pipe or insulation, may freely rest on a steel plate.

(3) On pipe 100 mm nominal and larger carrying medium less that 15 degrees C a Type 40 shield, attached to the pipe or insulation, may freely rest on a steel plate.

m. Pipe hangers on horizontal insulated pipe shall be the size of the outside diameter of the insulation. The insulation shall be continuous through the hanger on all pipe sizes and applications.

n. Where there are high system temperatures and welding to piping is not desirable, the type 35 guide shall include a pipe cradle, welded to the guide structure and strapped securely to the pipe. The pipe shall

be separated from the slide material by at least 100 mm or by an amount adequate for the insulation, whichever is greater.

o. Hangers and supports for plastic pipe shall not compress, distort, cut or abrade the piping, and shall allow free movement of pipe except where otherwise required in the control of expansion/contraction.

3.1.9 Welded Installation

Plumbing pipe weldments shall be as indicated. Changes in direction of piping shall be made with welding fittings only; mitering or notching pipe to form elbows and tees or other similar type construction will not be permitted. Branch connection may be made with either welding tees or forged branch outlet fittings. Branch outlet fittings shall be forged, flared for improvement of flow where attached to the run, and reinforced against external strains. Beveling, alignment, heat treatment, and inspection of weld shall conform to ASME B31.1. Weld defects shall be removed and repairs made to the weld, or the weld joints shall be entirely removed and rewelded. After filler metal has been removed from its original package, it shall be protected or stored so that its characteristics or welding properties are not affected. Electrodes that have been wetted or that have lost any of their coating shall not be used.

3.1.10 Pipe Cleanouts

Pipe cleanouts shall be the same size as the pipe except that cleanout plugs larger than 100 mm nominal will not be required. A cleanout installed in connection with cast-iron soil pipe shall consist of a long-sweep 1/4 bend or one or two 1/8 bends extended to the place shown. An extra-heavy cast-brass or cast-iron ferrule with countersunk cast-brass head screw plug shall be caulked into the hub of the fitting and shall be flush with the floor. Cleanouts in connection with other pipe, where indicated, shall be T-pattern, 90 degree branch drainage fittings with cast-brass screw plugs, except plastic plugs shall be installed in plastic pipe. Plugs shall be the same size as the pipe up to and including 100 mm nominal. Cleanout tee branches with screw plug shall be installed at the foot of soil and waste stacks, at the foot of interior downspouts, on each connection to building storm drain where interior downspouts are indicated, and on each building drain outside the building. Cleanout tee branches may be omitted on stacks in single story buildings with slab-on-grade construction or where less than 450 mm of crawl space is provided under the floor. Cleanouts on pipe concealed in partitions shall be provided with chromium plated bronze, nickel bronze, nickel brass or stainless steel flush type access cover plates. Round access covers shall be provided and secured to plugs with securing screw. Square access covers may be provided with matching frames, anchoring lugs and cover screws. Cleanouts in finished walls shall have access covers and frames installed flush with the finished wall. Cleanouts installed in finished floors subject to foot traffic shall be provided with a chrome-plated cast brass, nickel brass, or nickel bronze cover secured to the plug or cover frame and set flush with the finished floor. Heads of fastening screws shall not project above the cover surface. Where cleanouts are provided with adjustable heads, the heads shall be cast iron.

3.2 WATER HEATERS AND HOT WATER STORAGE TANKS

3.2.1 Relief Valves

No valves shall be installed between a relief valve and its water heater or storage tank. The P&T relief valve shall be installed where the valve actuator comes in contact with the hottest water in the heater. Whenever possible, the relief valve shall be installed directly in a tapping in the tank or heater; otherwise,

the P&T valve shall be installed in the hot-water outlet piping. A vacuum relief valve shall be provided on the cold water supply line to the hot-water storage tank or water heater and mounted above and within 150 mm above the top of the tank or water heater.

3.2.2 Installation of Gas-Fired Water Heater

Installation shall conform to NFPA 54. Storage water heaters that are not equipped with integral heat traps and having vertical pipe risers shall be installed with heat traps directly on both the inlet and outlet. Circulating systems need not have heat traps installed. An acceptable heat trap may be a piping arrangement such as elbows connected so that the inlet and outlet piping make vertically upward runs of not less than 600 mm just before turning downward or directly horizontal into the water heater's inlet and outlet fittings. Commercially available heat traps, specifically designed by the manufacturer for the purpose of effectively restricting the natural tendency of hot water to rise through vertical inlet and outlet piping during standby periods may also be approved.

3.2.3 Omitted

3.2.4 Heat Traps

Piping to and from each water heater and hot water storage tank shall be routed horizontally and downward a minimum of 600 mm before turning in an upward direction.

3.2.5 Connections to Water Heaters

Connections of metallic pipe to water heaters shall be made with dielectric unions or flanges.

3.3 FIXTURES AND FIXTURE TRIMMINGS

Angle stops, straight stops, stops integral with the faucets, or concealed type of lock-shield, and loose-key pattern stops for supplies with threaded, sweat or solvent weld inlets shall be furnished and installed with fixtures. Where connections between copper tubing and faucets are made by rubber compression fittings, a beading tool shall be used to mechanically deform the tubing above the compression fitting. Exposed traps and supply pipes for fixtures and equipment shall be connected to the rough piping systems at the wall, unless otherwise specified under the item. Floor and wall escutcheons shall be as specified. Drain lines and hot water lines of fixtures for handicapped personnel shall be insulated and do not require polished chrome finish. Plumbing fixtures and accessories shall be installed within the space shown.

3.3.1 Fixture Connections

Where space limitations prohibit standard fittings in conjunction with the cast-iron floor flange, special short-radius fittings shall be provided. Connections between earthenware fixtures and flanges on soil pipe shall be made gas tight and watertight with a closet-setting compound or neoprene gasket and seal. Use of natural rubber gaskets or putty will not be permitted. Fixtures with outlet flanges shall be set the proper distance from floor or wall to make a first-class joint with the closet-setting compound or gasket and fixture used.

3.3.2 Flushometer Valves

Flushometer valves shall be secured to prevent movement by anchoring the long finished top spud connecting tube to wall adjacent to valve with approved metal bracket. Flushometer valves for water closets shall be installed 1 m above the floor.

3.3.3 Height of Fixture Rims Above Floor

Lavatories shall be mounted with rim 775 mm above finished floor. Wall-hung drinking fountains and water coolers shall be installed with rim 1020 mm above floor. Wall-hung service sinks shall be mounted with rim 700 mm above the floor. Installation of fixtures for use by the physically handicapped shall be in accordance with CABO A117.1.

3.3.4 Shower Bath Outfits

The area around the water supply piping to the mixing valves and behind the escutcheon plate shall be made watertight by caulking or gasketing.

3.3.5 Fixture Supports

Fixture supports for off-the-floor lavatories, urinals, water closets, and other fixtures of similar size, design, and use, shall be of the chair-carrier type. The carrier shall provide the necessary means of mounting the fixture, with a foot or feet to anchor the assembly to the floor slab. Adjustability shall be provided to locate the fixture at the desired height and in proper relation to the wall. Support plates, in lieu of chair carrier, shall be fastened to the wall structure only where it is not possible to anchor a floor-mounted chair carrier to the floor slab.

3.3.5.1 Support for Solid Masonry Construction

Chair carrier shall be anchored to the floor slab. Where a floor-anchored chair carrier cannot be used, a suitable wall plate shall be imbedded in the masonry wall.

3.3.5.2 Support for Cellular-Masonry Wall Construction

Chair carrier shall be anchored to floor slab. Where a floor-anchored chair carrier cannot be used, a suitable wall plate shall be fastened to the cellular wall using through bolts and a back-up plate.

3.3.5.3 Support for Steel Stud Frame Partitions

Chair carrier shall be used. The anchor feet and tubular uprights shall be of the heavy duty design; and feet (bases) shall be steel and welded to a square or rectangular steel tube upright. Wall plates, in lieu of floor-anchored chair carriers, shall be used only if adjoining steel partition studs are suitably reinforced to support a wall plate bolted to these studs.

3.3.6 Backflow Prevention Devices

Plumbing fixtures, equipment, and pipe connections shall not cross connect or interconnect between a potable water supply and any source of nonpotable water. Backflow preventers shall be installed where

indicated and in accordance with NAPHCC-01 at all other locations necessary to preclude a cross-connect or interconnect between a potable water supply and any nonpotable substance. In addition backflow preventers shall be installed at all locations where the potable water outlet is below the flood level of the equipment, or where the potable water outlet will be located below the level of the nonpotable substance. Backflow preventers shall be located so that no part of the device will be submerged. Backflow preventers shall be of sufficient size to allow unrestricted flow of water to the equipment, and preclude the backflow of any nonpotable substance into the potable water system. Access shall be provided for maintenance and testing. Each device shall be a standard commercial unit.

3.3.7 Access Panels

Access panels shall be provided for concealed valves and controls, or any item requiring inspection or maintenance. Access panels shall be of sufficient size and located so that the concealed items may be serviced, maintained, or replaced. Access panels shall be as specified in Section 05500 MISCELLANEOUS METAL.

3.3.8 Sight Drains

Sight drains shall be installed so that the indirect waste will terminate 50 mm above the flood rim of the funnel to provide an acceptable air gap.

3.3.9 Traps

Each trap shall be placed as near the fixture as possible, and no fixture shall be double-trapped. Traps installed on cast-iron soil pipe shall be cast iron. Traps installed on steel pipe or copper tubing shall be recess-drainage pattern, or brass-tube type. Traps installed on plastic pipe may be plastic conforming to ASTM D 3311. Traps for acid-resisting waste shall be of the same material as the pipe.

3.3.10 Shower Pans

Before installing shower pan, subfloor shall be free of projections such as nail heads or rough edges of aggregate. Drain shall be a bolt-down, clamping ring type with weepholes, installed so the lip of the subdrain is flush with subfloor.

3.3.10.1 General

The floor of each individual shower, the shower-area portion of combination shower and drying room, and the entire shower and drying room where the two are not separated by curb or partition, shall be made watertight with a shower pan fabricated in place. The shower pan material shall be cut to size and shape of the area indicated, in one piece to the maximum extent practicable, allowing a minimum of 150 mm for turnup on walls or partitions, and shall be folded over the curb with an approximate return of 1/4 of curb height. The upstands shall be placed behind any wall or partition finish. Subflooring shall be smooth and clean, with nailheads driven flush with surface, and shall be sloped to drain. Shower pans shall be clamped to drains with the drain clamping ring.

3.3.10.2 Metal Shower Pans

When a shower pan of required size cannot be furnished in one piece, metal pieces shall be joined with a flatlock seam and soldered or burned. The corners shall be folded, not cut, and the corner seam shall be soldered or burned. Pans, including upstands, shall be coated on all surfaces with one brush coat of asphalt. Asphalt shall be applied evenly at not less than 1 liter per square meter. A layer of felt covered with building paper shall be placed between shower pans and wood floors. The joining surfaces of metal pan and drain shall be given a brush coat of asphalt after the pan is connected to the drain.

3.3.10.3 Nonplasticized Chlorinated Polyethylene Shower Pans

Corners of nonplasticized chlorinated polyethylene shower pans shall be folded against the upstand by making a pig-ear fold. Hot-air gun or heat lamp shall be used in making corner folds. Each pig-ear corner fold shall be nailed or stapled 15 mm from the upper edge to hold it in place. Nails shall be galvanized large-head roofing nails. On metal framing or studs, approved duct tape shall be used to secure pig-ear fold and membrane. Where no backing is provided between the studs, the membrane slack shall be taken up by pleating and stapling or nailing to studding 15 mm from upper edge. To adhere the membrane to vertical surfaces, the back of the membrane and the surface to which it will be applied shall be coated with adhesive that becomes dry to the touch in 5 to 10 minutes, after which the membrane shall be pressed into place. Surfaces to be solvent-welded shall be clean. Surfaces to be joined with xylene shall be initially sprayed and vigorously cleaned with a cotton cloth, followed by final coating of xylene and the joining of the surfaces by roller or equivalent means. If ambient or membrane temperatures are below 4 degrees C the membrane and the joint shall be heated prior to application of xylene. Heat may be applied with hot-air gun or heat lamp, taking precautions not to scorch the membrane. Adequate ventilation and wearing of gloves are required when working with xylene. Membrane shall be pressed into position on the drain body, and shall be cut and fit to match so that membrane can be properly clamped and an effective gasket-type seal provided. On wood subflooring, two layers of 0.73 kg per square meter dry felt shall be installed prior to installation of shower pan to ensure a smooth surface for installation.

3.3.10.4 Nonplasticized Polyvinyl Chloride (PVC) Shower Pans

Nonplasticized PVC shall be turned up behind walls or wall surfaces a distance of not less than 150 mm in room areas and 75 mm above curb level in curbed spaces with sufficient material to fold over and fasten to outside face of curb. Corners shall be pig-ear type and folded between pan and studs. Only top 25 mm of upstand shall be nailed to hold in place. Nails shall be galvanized large-head roofing type. Approved duct tape shall be used on metal framing or studs to secure pig-ear fold and membrane. Where no backing is provided between studs, the membrane slack shall be taken up by pleating and stapling or nailing to studding at top inch of upstand. To adhere the membrane to vertical surfaces, the back of the membrane and the surface to which it is to be applied shall be coated with adhesive that becomes dry to the touch in 5 to 10 minutes, after which the membrane shall be pressed into place. Trim for drain shall be exactly the size of drain opening. Bolt holes shall be pierced to accommodate bolts with a tight fit. Adhesive shall be used between pan and subdrain. Clamping ring shall be bolted firmly. A small amount of gravel or porous materials shall be placed at weepholes so that holes remain clear when setting bed is poured. Membrane shall be solvent welded with PVC solvent cement. Surfaces to be solvent welded shall be clean (free of grease and grime). Sheets shall be laid on a flat surface with an overlap of about 50 mm. Top edge shall be folded back and surface primed with a PVC primer. PVC cement shall be applied and surfaces immediately placed together, while still wet. Joint shall be lightly rolled with a paint roller, then as the joint sets shall be rolled firmly but not so hard as to distort the material. In long lengths,

about 600 or 900 mm at a time shall be welded. On wood subflooring, two layers of 0.73 kg per square meter felt shall be installed prior to installation of shower pan to ensure a smooth surface installation.

3.4 VIBRATION-ABSORBING FEATURES

Mechanical equipment, including pumps, shall be isolated from the building structure by approved vibration-absorbing features, unless otherwise shown. Each foundation shall include an adequate number of standard isolation units. Each unit shall consist of machine and floor or foundation fastening, together with intermediate isolation material, and shall be a standard product with printed load rating. Piping connected to mechanical equipment shall be provided with flexible connectors. Isolation unit installation shall limit vibration to 30 percent of the lowest equipment rpm.

3.5 WATER METER REMOTE READOUT REGISTER

The remote readout register shall be mounted at the location indicated or as directed by the Contracting Officer.

3.6 IDENTIFICATION SYSTEMS

3.6.1 Identification Tags

Identification tags made of brass, engraved laminated plastic, or engraved anodized aluminum, indicating service and valve number shall be installed on valves, except those valves installed on supplies at plumbing fixtures. Tags shall be 35 mm minimum diameter, and marking shall be stamped or engraved. Indentations shall be black, for reading clarity. Tags shall be attached to valves with No. 12 AWG, copper wire, chrome-plated beaded chain, or plastic straps designed for that purpose. Provide a set of laminated list of valves to be posted in each mechanical or service area. The list of valves be in tabular format and include type, location, and valve number.

3.6.2 Color Coding

Color coding for piping identification shall be as specified in Section 09900 PAINTING, GENERAL. Also provide direction of flow arrows on piping.

3.6.3 Color Coding Scheme for Locating Hidden Utility Components

Scheme shall be provided in buildings having suspended grid ceilings. The color coding scheme shall identify points of access for maintenance and operation of operable components which are not visible from the finished space and installed in the space directly above the suspended grid ceiling. The operable components shall include valves, dampers, switches, linkages and thermostats. The color coding scheme shall consist of a color code board and colored metal disks. Each colored metal disk shall be approximately 12 mm in diameter and secured to removable ceiling panels with fasteners. The fasteners shall be inserted into the ceiling panels so that the fasteners will be concealed from view. The fasteners shall be manually removable without tools and shall not separate from the ceiling panels when panels are dropped from ceiling height. Installation of colored metal disks shall follow completion of the finished surface on which the disks are to be fastened. The color code board shall have the approximate dimensions of 1 m width, 750 mm height, and 12 mm thickness. The board shall be made of wood

fiberboard and framed under glass or 1.6 mm transparent plastic cover. Unless otherwise directed, the color code symbols shall be approximately 20 mm in diameter and the related lettering in 15 mm high capital letters. The color code board shall be mounted and located in the mechanical or equipment room. The color code system shall be submitted and approved by the Contracting Officer.

3.7 ESCUTCHEONS

Escutcheons shall be provided at finished surfaces where bare or insulated piping, exposed to view, passes through floors, walls, or ceilings, except in boiler, utility, or equipment rooms. Escutcheons shall be fastened securely to pipe or pipe covering and shall be satin-finish, corrosion-resisting steel, polished chromium-plated zinc alloy, or polished chromium-plated copper alloy. Escutcheons shall be either one-piece or split-pattern, held in place by internal spring tension or setscrew.

3.8 PAINTING

Painting of pipes, hangers, supports, and other iron work, either in concealed spaces or exposed spaces, is specified in Section 09900 PAINTING, GENERAL.

3.9 TESTS, FLUSHING, AND STERILIZATION

3.9.1 Plumbing System

The plumbing system shall be tested in accordance with NAPHCC-01.

3.9.1.1 Shower Pans

After installation of the pan and finished floor, the drain shall be temporarily plugged below the weep holes. The floor area shall be flooded with water to a minimum depth of 25 mm for a period of 24 hours. Any drop in the water level during test, except for evaporation, will be reason for rejection, repair, and retest.

3.9.2 Omitted

3.9.3 Defective Work

If inspection or test shows defects, such defective work or material shall be replaced or repaired as necessary and inspection and tests shall be repeated. Repairs to piping shall be made with new materials. Caulking of screwed joints or holes will not be permitted.

3.9.4 System Flushing

After tests are completed, potable water piping shall be flushed. In general, sufficient water shall be used to produce a minimum water velocity of 0.762 meters per second through piping being flushed. Flushing shall be continued until discharge water shows no discoloration. System shall be drained at low points. Strainer screens shall be removed, cleaned, and replaced in line. After flushing and cleaning, systems shall be prepared for service by immediately filling water piping with clean, fresh potable water. Any stoppage, discoloration, or other damage to the finish, furnishings, or parts of the building due to the Contractor's

failure to properly clean the piping system shall be repaired by the Contractor. When the work is complete, the hot-water system shall be adjusted for uniform circulation. Flushing devices and automatic control systems shall be adjusted for proper operation.

3.9.5 Operational Test

Upon completion of and prior to acceptance of the installation, the Contractor shall subject the plumbing system to operating tests to demonstrate satisfactory functional and operational efficiency. Such operating tests shall cover a period of not less than 8 hours for each system and shall include the following information in a report with conclusion as to the adequacy of the system:

a. Time, date, and duration of test.

b. Water pressures at the most remote and the highest fixtures.

c. Operation of each fixture and fixture trim.

d. Operation of each valve, hydrant, and faucet.

e. Pump suction and discharge pressures.

f. Temperature of each domestic hot-water supply.

g. Operation of each floor and roof drain by flooding with water.

h. Operation of each vacuum breaker and backflow preventer.

Each indicating instrument shall be read at 1/2 hour intervals. The report of the test shall be submitted in quadruplicate. The Contractor shall furnish instruments, equipment, and personnel required for the tests; the Government will furnish the necessary water and electricity.

3.9.6 Sterilization

After pressure tests have been made, the entire domestic hot- and cold-water distribution system shall be sterilized. System shall be thoroughly flushed with water of sufficient velocity until all entrained dirt and other foreign material have been removed, before introducing chlorinating material. The chlorinating material shall be hypochlorites or liquid chlorine. Water chlorination procedure shall be in accordance with AWWA M20. The chlorinating material shall be fed into the water piping system at a constant rate at a concentration of at least 50 parts per million (ppm). A properly adjusted hypochlorite solution injected into the main with a hypochlorinator, or liquid chlorine injected into the main through a solution-feed chlorinator and booster pump, shall be used. The chlorine residual shall be checked at intervals to ensure that the proper level is maintained. Chlorine application shall continue until the entire main is filled. The water shall remain in the system for a minimum of 24 hours. Each valve in the system being sterilized shall be opened and closed several times during the contact period to ensure its proper disinfection. Following the 24-hour period, no less than 25 ppm chlorine residual shall remain in the system. Water tanks shall be disinfected by the addition of chlorine directly to the filling water. Following a 6 hour period, no less than 50 ppm chlorine residual shall remain in the tank. The system including the tanks shall then be flushed

with clean water until the residual chlorine is reduced to less than one part per million. During the flushing period each valve and faucet shall be opened and closed several times. From several points in the system the Contracting Officer will take samples of water in properly sterilized containers for bacterial examination. The samples of water shall be tested for total coliform organisms (coliform bacteria, fecal coliform, streptococcal, and other bacteria) in accordance with AWWA-10062J4. The testing method used shall be either the multiple-tube fermentation technique or the membrane- filter technique. The sterilizing shall be repeated until tests indicate the absence of coliform organisms (0 means coliform density per 100 milliliters) in the samples for at least 2 full days. The system will not be accepted until satisfactory bacteriological results have been obtained.

3.10 PLUMBING FIXTURE SCHEDULE

P-1 WATER CLOSET:

Siphon-jet, elongated bowl, top supply spud, ASME A112.19.2M, floor mounted. Floor flange shall be copper alloy, cast iron, or plastic.

Gasket shall be wax type.

Seat - CID A-A-238, Type A, white plastic, elongated, open front.

Flush Tank - An adequate quantity of water shall be provided to flush and clean the fixture served. The water supply to flush tanks equipped for manual flushing shall be controlled by a float valve or other automatic device designed to refill the tank after each discharge, and to completely shut off the water flow to the tank when the tank is filled to operational capacity. Water closets having their flush valve seat located below the flood level rim of the closet bowl shall have a ballcock installed within a sheath or in a separate and isolated compartment of the tank, both to have visible discharge onto the floor in case of failure. Provision shall be made to automatically supply water to the fixture so as to refill the trap seal after each flushing. Ballcocks shall meet ASSE 1002.

P-1A WATER CLOSET HANDICAPPED:

Siphon-jet, elongated bowl, top supply spud, ASME A112.19.2M, wall mounted. Floor flange shall be copper alloy, cast iron, or plastic.

Gasket shall be wax type.

Seat - CID A-A-238, Type A, white plastic, elongated, open front.

Flushometer Valve - ASSE 1037, large diaphragm type with non-hold-open feature, backcheck angle control stop, and vacuum breaker. Minimum upper chamber inside diameter of not less than 65 mm at the point where the diaphragm is sealed between the upper and lower chambers. The maximum water use shall be 6 liters per flush.

Top rim of owl shall be 460 mm above the floor.

P-2 URINAL:

Wall hanging, with integral trap and extended shields, ASME A112.19.2M siphon- jet. Top supply connection, back outlet.

Flushometer Valve - Similar to Flushometer Valve for P-1. The maximum water use shall be 3.8 liters per flush.

P-3 LAVATORY:

Manufacturer's standard sink depth, enameled cast iron ASME A112.19.1M, countertop, oval.

Faucet - Faucets shall be center set type. Faucets shall have replaceable seats and washers. Valves and handles shall be copper alloy. Connection between valve and spout for center-set faucet shall be of rigid metal tubing. Flow shall be limited to 1 liter per cycle at a flowing water pressure of 549 kPa if a metering device or fitting is used that limits the period of water discharge such as a foot switch or fixture occupancy sensor. If a metering device is not used, the flow shall be limited to 1.57 liters per second at a flowing pressure of 549 kPa.

Handles - Crown type. Cast, formed, or drop forged copper alloy.

Drain - Pop-up drain shall include stopper, lift rods, jam nut, washer, and tail piece. See paragraph FIXTURES for optional plastic accessories.

P-3A WHEELCHAIR LAVATORY:

Vitreous china, ASME A112.19.2M, wheelchair lavatory with wrist or elbow controls, 508.0 mm wide by 685.8 mm deep with gooseneck spout. Flow shall be limited to 0.16 liter per sec per cycle at a flowing water pressure of 549 kPa if a metering device or fitting is used that limits the period of water discharge such as foot switch or fixture occupancy sensor. If a metering device is not used, the flow shall be limited to 1.57 liters per second at a flowing water pressure of 549 kPa.
Drain - Strainer shall be copper alloy or stainless steel.

P-4 SHOWER:

Shower heads, CID A-A-240 other than emergency showers, shall include a nonremovable, tamperproof device to limit water flow to 0.16 liters per second when tested in accordance with ASME A112.18.1M.

Wall Mounted: Shower head shall be nonadjustable spray, stainless steel or chromium plated brass with ball joint. Handles shall be chrome-plated die cast zinc alloy. Control valves shall be copper alloy and have metal integral parts of copper alloy, nickel alloy, or stainless steel. Valves shall be pressure-balanced, anti-scald, single lever type provided with integral stops. Shower head shall be vandalproof with integral back.

Shower receptor shall be terrazzo manufactured of tan and white marble chips cast in white portland cement reinforced with 1.58 mm minimum thickness galvanized wire to produce a compressive strength of not less than 21 MPa, 7 days after casting. Receptor shall have an integral cast, galvanized-bonderized steel tiling flange which extends 25 mm minimum above shoulder on three sides. Terrazzo surface shall be

ground and polished with all air holes and pits to be grouted and polished. Drain body shall be brass and integral cast and shall provide for a caulked lead or noncaulked connection not less than 25 mm deep. Receptor size shall be as indicated on drawings. Receptor shall be installed level in a thin bed of mortar.

P-5 KITCHEN SINK:

Ledge back with holes for faucet and spout double bowl, each bowl 610 by 535 mm stainless steel ASME A112.19.3M.

Faucet and Spout - Cast or wrought copper alloy. Aerator shall have internal threads. Flow shall be limited to 0.16 liter per cycle at a flowing water pressure of 549 kPa if a metering device or fitting is used that limits the period of water discharge such as a foot switch or fixture occupancy sensor. If a metering device is not used, the flow shall be limited to 1.57 liters per second at a flowing water pressure of 549 kPa.

Handle - Cast copper alloy, wrought copper alloy, or stainless steel. Single lever type.

Drain Assembly - Plug, cup strainer, crossbars, jam nuts, washers, couplings, stopper, etc. shall be copper alloy or stainless steel.

P-6 JANITOR SINK:

Enameled cast iron ASME A112.19.1M, copper alloy or stainless steel ASME A112.19.3M corner, floor mounted 711 mm square, 172 mm deep.

Faucet and Spout - Cast or wrought copper alloy, with top or bottom brace, with backflow preventer. Faucets shall have replaceable seat and the washer shall rotate onto the seat. Handles shall be lever type. Strainers shall have internal threads.

Drain Assembly - Plug, cup strainer, crossbars, jam nuts, washers, couplings, stopper, etc. shall be copper alloy or stainless steel.

Trap - Cast iron.

P-7 WATER COOLER DRINKING FOUNTAINS:

Water cooler drinking fountains shall be self contained, conform to ARI 1010, use one of the fluorocarbon gases conforming to ARI 700 and ASHRAE 34 which has an Ozone Depletion Potential of less than or equal to 0.05, have a capacity to deliver 30.2 liters per hour of water at 10 degrees C with an inlet water temperature of 27 degrees C while residing in a room environment of 32 degrees C, and have self-closing valves. Self-closing valves shall have automatic stream regulators, have a flow control capability, have a push button actuation or have a cross-shaped index metal turn handle without a hood. Exposed surfaces of stainless steel shall have No. 4 general polish finish. Spouts shall provide a flow of water at least 100 mm high so as to allow the insertion of a cup or glass under the flow of water.

Surface Wall-Mounted - Surface wall-mounted units shall be 336.6 mm wide, 330.2 mm deep, and have a back height of 152.4 to 203.2 mm. The bowl shall be made of corrosion resisting steel. The unit shall have concealed fasteners and be for interior installation.

P-7A WATER COOLER DRINKING FOUNTAINS:

Water cooler drinking fountains shall be self contained, conform to ARI 1010, use one of the fluorocarbon gases conforming to ARI 700 and ASHRAE 34 which has an Ozone Depletion Potential of less than or equal to 0.05, have a capacity to deliver 30.2 liters per hour of water at 10 degrees C with an inlet water temperature of 27 degrees C while residing in a room environment of 32 degrees C, and have self-closing valves. Self-closing valves shall have automatic stream regulators, have a flow control capability, have a push button actuation or have a cross-shaped index metal turn handle without a hood. Exposed surfaces of stainless steel shall have No. 4 general polish finish. Spouts shall provide a flow of water at least 100 mm high so as to allow the insertion of a cup or glass under the flow of water.

Handicapped - Handicapped units shall be surface wall-mounted. The dimensions shall be 381.0 mm wide, 508.0 mm deep, with a back height of 152.4 to 203.2 mm. The unit shall clear the floor or ground by at least 200 mm. A clear knee space shall exist between the bottom of the bowl and the floor or ground of at least 685 mm and between the front edge of the bowl and the body of the unit of at least 200 mm. A 200 mm wide clear space shall exist on both sides of the unit. The spout height shall be no more than 1 m above the floor or ground to the outlet. The spout shall be at the front of the unit and direct the water flow in a trajectory that is parallel or nearly parallel to the front of the unit. The bowl shall be 165.1 mm high, made of corrosion resisting steel and be for interior installation.

P-8 WASHING MACHINE BOX:
See plumbing drawings for details.

3.11 POSTED INSTRUCTIONS

Framed instructions under glass or in laminated plastic, including wiring and control diagrams showing the complete layout of the entire system, shall be posted where directed. Condensed operating instructions explaining preventive maintenance procedures, methods of checking the system for normal safe operation, and procedures for safely starting and stopping the system shall be prepared in typed form, framed as specified above for the wiring and control diagrams and posted beside the diagrams. The framed instructions shall be posted before acceptance testing of the systems.

3.12 PERFORMANCE OF WATER HEATING EQUIPMENT

Standard rating condition terms are as follows:

EF = Energy factor, overall efficiency.

ET = Thermal efficiency with 21 degrees C delta T.

EC = Combustion efficiency, 100 percent - flue loss when smoke = o (trace is permitted).

SL = Standby loss in W/0.093 sq m based on 27 degrees C delta T, or in percent per hour based on nominal 38 degrees C delta T.

HL = Heat loss of tank surface area.

V = Storage volume in liters

3.12.1 Storage Water Heaters

3.12.1.1 Omitted

3.12.1.2 Gas

a. Storage capacity of 379 liters (100 gallons) or less, and input rating of 21980 W (75,000 Btu/h) or less: minimum EF shall be 0.62-0.0019V per 10 CFR 430.

b. Storage capacity of more than 379 liters (100 gallons) - or input rating more than 21980 W: (75,000 Btu/h:) Et shall be 77 percent; maximum SL shall be 1.3+38/V, per ANSI Z21.10.3.

TABLE I
PIPE AND FITTING MATERIALS FOR DRAINAGE, WASTE, AND VENT PIPING SYSTEMS

		SERVICE					
Item No.	Pipe and Fitting Materials	A	B	C	D	E	F
1	Cast iron soil pipe and fittings, hub and spigot, ASTM A 74 with compression gaskets	X	X	X	X	X	
2	Cast iron pipe and fittings hubless, CISPI 301 and ASTM A 888	X	X	X	X		
3	Cast iron drainage fittings, threaded, ASME B16.12 for use with Item 10	X		X	X		
4	Cast iron screwed fittings (threaded) ASME B16.4 for use with Item 10		X		X		
5	Grooved pipe couplings, ferrous and non-ferrous pipe ASTM A 536 and ASTM A 47	X	X	X		X	
6	Ductile iron grooved joint fittings for ferrous pipe ASTM A 536 and ASTM A 47 for use with Item 5	X	X	X	X		
7	Bronze sand casting grooved joint pressure fittings for non-ferrous pipe ASTM B 584, for use with Item 5	X	X	X	X		
8	Wrought copper grooved joint pressure fittings for non-ferrous pipe ASTM B 75 C12200, ASTM B 152 C11000, ASME B16.22 ASME B16.22 for use with Item 5	X	X				
9	Malleable-iron threaded fittings, galvanized ASME B16.3 for use with Item 10	X	X				
10	Steel pipe, seamless galvanized,	X		X	X		

	ASTM A 53, Type S, Grade B					
11	Seamless red brass pipe, ASTM B 43	X	X			
12	Bronzed flanged fittings, ASME B16.24 for use with Items 11 and 14	X	X			
13	Cast copper alloy solder joint pressure fittings, ASME B16.18 for use with Item 14	X	X			
14	Seamless copper pipe, ASTM B 42			X		
15	Cast bronze threaded fittings, ASME B16.15			X	X	
16	Copper drainage tube, (DWV), ASTM B 306	X*	X	X*	X	X
17	Wrought copper and wrought alloy solder-joint drainage fittings. ASME B16.29	X	X	X	X	X
18	Cast copper alloy solder joint drainage fittings, DWV, ASME B16.23	X	X	X	X	X
19	Acrylonitrile-Butadiene-Styrene (ABS) plastic drain, waste, and vent pipe and fittings ASTM D 2661, ASTM F 628	X	X	X	X	X
20	Polyvinyl Chloride plastic drain, waste and vent pipe and fittings, ASTM D 2665, ASTM F 891, (Sch 40)	X	X	X	X	X

SERVICE:

A - Underground Building Soil, Waste and Storm Drain
B - Aboveground Soil, Waste, Drain In Buildings
C - Underground Vent
D - Aboveground Vent
E - Interior Rainwater Conductors Above Ground
F - Corrosive Waste And Vent Above And Below Ground
* - Hard Temper

TABLE II
PIPE AND FITTING MATERIALS FOR PRESSURE PIPING SYSTEMS

Item No.		Pipe and Fitting Materials	SERVICE A	B	C	D
1		Malleable-iron threaded fittings,				
	a.	Galvanized, ASME B16.3 for use with Item 4a	X	X	X	X
	b.	Same as "a" but not galvanized for use with Item 4b			X	
2		Grooved pipe couplings, ferrous pipe ASTM A 536 and ASTM A 47, non-ferrous pipe, ASTM A 536 and ASTM A 47	X	X	X	
3		Ductile iron grooved joint fittings for ferrous pipe ASTM A 536 and ASTM A 47 for use with Item 2		X	X	X
4		Steel pipe:				
	a.	Seamless, galvanized, ASTM A 53, Type S, Grade B	X	X	X	X
	b.	Seamless, black, ASTM A 53, Type S, Grade B			X	
5		Seamless red brass pipe, ASTM B 43	X	X		X
6		Bronze flanged fittings, ASME B16.24 for use with Items 4 and 6	X	X	X	
7		Seamless copper pipe, ASTM B 42	X	X		X
8		Seamless copper water tube, ASTM B 88	X**	X**	X**	X***
9		Seamless and welded copper distribution tube (Type D) ASTM B 641	X**	X**	X**	***
10		Cast bronze threaded fittings, ASME B16.15 for use with Items 7 and 8	X	X		X
11		Wrought copper and bronze solder-joint pressure fittings, ASME B16.22 for use	X	X	X	X

TABLE II
PIPE AND FITTING MATERIALS FOR PRESSURE PIPING SYSTEMS

		SERVICE			
Item No.	Pipe and Fitting Materials	A	B	C	D
	with Items 7 and 8				
12	Cast copper alloy solder-joint pressure fittings, ASME B16.18 for use with Items 7 and 8	X	X	X	X
13	Bronze and sand castings grooved joint pressure fittings for non-ferrous pipe ASTM B 584, for use with Item 2		X	X	X
14	Steel pipeline flanges, MSS SP-44	X	X		
15	Fittings: brass or bronze; ASME B16.15, and ASME B16.18 ASTM B 828	X	X		
16	Carbon steel pipe unions, socket-welding and threaded, MSS SP-83	X	X	X	
17	Malleable-iron threaded pipe unions ASME B16.39	X	X		
18	Nipples, pipe threaded ASTM A 733	X	X	X	

A - Cold Water Aboveground

B - Hot Water 82 degree C Maximum Above ground

C - Compressed Air Lubricated

D - Cold Water Service Below Ground

Indicated types are minimum wall thicknesses.

** - Type L - Hard

*** - Type K - Hard temper with brazed joints only or type K-soft temper without joints in or under floors

**** - In or under slab floors only brazed joints

TABLE III

STANDARD RATING CONDITIONS AND MINIMUM PERFORMANCE RATINGS FOR WATER HEATING EQUIPMENT

A. STORAGE
WATER HEATERS

FUEL	STORAGE CAPACITY LITERS	INPUT RATING	TEST PROCEDURE	REQUIRED PERFORMANCE
Gas	380 max.	22 kW max.	10 CFR 430 minimum	EF = 0.62-0.0019V
Gas	380 min. OR	22 kW min.	ANSI Z21.10.3	ET= 77 percent; SL = 1.3+38/V max.

TERMS:

EF = Energy factor, overall efficiency.
ET = Thermal efficiency with 21 degrees C delta T.
EC = Combustion efficiency, 100 percent - flue loss when smoke = 0 (trace is permitted).
SL = Standby loss in W/0.09 sq. m. based on 27 degrees C delta T, or in percent per hour based on nominal 32 degrees C delta T.
HL = Heat loss of tank surface area
V = Storage volume in gallons

END OF SECTION

SECTION 15556

FORCED HOT WATER HEATING SYSTEMS USING WATER HEAT EXCHANGERS

PART 1 GENERAL

1.1 REFERENCES

The publications listed below form a part of this specification to the extent referenced. The publications are referred to in the text by basic designations only.

AMERICAN SOCIETY FOR TESTING AND MATERIALS (ASTM)

ASTM A 47	(1990) Ferritic Malleable Iron Castings
ASTM A 53	(1990b) Pipe, Steel, Black and Hot-Dipped, Zinc-Coated Welded and Seamless
ASTM A 105	(1992) Forgings, Carbon Steel, for Piping Components
ASTM A 106	(1991) Seamless Carbon Steel Pipe for High-Temperature Service
ASTM A 183	(1983; R 1990) Carbon Steel Track Bolts and Nuts
ASTM A 193	(1992) Alloy-Steel and Stainless Steel Bolting Materials for High-Temperature Service
ASTM A 234	(1992a) Piping Fittings of Wrought Carbon Steel and Alloy Steel for Moderate and Elevated Temperatures
ASTM A 366	(1991) Steel, Sheet, Carbon, Cold-Rolled, Commercial Quality
ASTM A 515	(1990) Pressure Vessel Plates, Carbon Steel, for Intermediate- and Higher-Temperature Service
ASTM A 516	(1990) Pressure Vessel Plates, Carbon Steel, for Moderate- and Lower-Temperature Service
ASTM A 525	(1991b) General Requirement for Steel Sheet, Zinc-Coated (Galvanized) by the Hot-Dip Process
ASTM A 527	(1990) Steel Sheet, Zinc-Coated (Galvanized) by the Hot-Dip Process, Lock-Forming Quality
ASTM A 528	(1990) Steel Sheet, Zinc-Coated (Galvanized) by the Hot-Dip Process, Drawing

	Quality
ASTM A 536	(1984) Ductile Iron Castings
ASTM A 569	(1991a) Steel, Carbon (0.15 Maximum, Percent), Hot-Rolled Sheet and Strip Commercial Quality
ASTM A 642	(1990) Steel Sheet, Zinc-Coated (Galvanized) by the Hot-Dip Process, Drawing Quality, Special Killed
ASTM A 733	(1989) Welded and Seamless Carbon Steel and Austenitic Stainless Steel Pipe Nipples
ASTM B 32	(1993) Solder Metal
ASTM B 62	(1993) Composition Bronze or Ounce Metal Castings
ASTM B 75	(1992a) Seamless Copper Tube
ASTM B 88	(1993) Seamless Copper Water Tube
ASTM B 251	(1993) Wrought Seamless Copper and Copper-Alloy Tube
ASTM B 395	(1993) U-Bend Seamless Copper and Copper Alloy Heat Exchanger and Condenser Tubes
ASTM B 650	(1985) Electrodeposited Engineering Chromium Coatings of Ferrous Substrates
ASTM B 687	(1988) Brass, Copper, and Chromium-Plated Pipe Nipples
ASTM D 596	(1991) Reporting Results of Analysis of Water
ASTM D 1248	(1984, R 1989) Polyethylene Plastics Molding and Extrusion Materials
ASTM D 2000	(1990) Rubber Products in Automotive Applications
ASTM D 3308	(1991a) PTFE Resin Skived Tape

AMERICAN SOCIETY OF MECHANICAL ENGINEERS (ASME)

ASME B1.20.1	(1983; R 1992) Pipe Threads, General Purpose (Inch)
ASME B16.1	(1989) Cast Iron Pipe Flanges and Flanged Fittings
ASME B16.3	(1992) Malleable Iron Threaded Fittings, Classes 150 and 300

ASME B16.4	(1992) Cast Iron Threaded Fittings Classes 125 and 250
ASME B16.5	(1988; Errata; B16.5a) Pipe Flanges and Flanged Fittings
ASME B16.9	(1993) Factory-Made Wrought Steel Buttwelding Fittings
ASME B16.11	(1991) Forged Fittings, Socket-Welding and Threaded
ASME B16.18	(1984) Cast Copper Alloy Solder Joint Pressure Fittings
ASME B16.21	(1992) Nonmetallic Flat Gaskets for Pipe Flanges
ASME B16.22	(1989) Wrought Copper and Copper Alloy Solder Joint Pressure Fittings
ASME B16.26	(1988) Cast Copper Alloy Fittings for Flared Copper Tubes
ASME B16.34	(1988) Valves - Flanged, Threaded, and Welding End
ASME B31.1	(1992; B31.1a; B31.1b) Power Piping
ASME B40.1	(1991) Gauges - Pressure Indicating Dial Type - Elastic Element
ASME BPV VIII Div 1	(1992; Addenda Dec 1992, Dec 1993) Boiler and Pressure Vessel Code; Section VIII, Pressure Vessels Division 1 - Basic Coverage
ASME BPV IX	(1992; Addenda Dec 1992, Dec 1993) Boiler and Pressure Vessel Code; Section IX, Welding and Brazing Qualifications

AMERICAN WATER WORKS ASSOCIATION (AWWA)

AWWA C606	(1987) Grooved and Shouldered Joints

EXPANSION JOINT MANUFACTURERS ASSOCIATION (EJMA)

EJMA-01	(1980; 5th Ed; Addenda 1985) EJMA Standards

FEDERAL SPECIFICATIONS (FS)

FS QQ-B-654	(Rev A; Am 1; Notice 1) Brazing Alloys, Silver
FS WW-U-516	(Rev B; Notice 1) Unions, Brass or Bronze, Threaded Pipe Connections and Solder-Joint Tube Connections
FS WW-U-531	(Rev F) Unions, Pipe, Steel or Malleable Iron: Threaded Connection, 150 Lb, 250 Lb and 300 Lb WSP

MANUFACTURERS STANDARDIZATION SOCIETY OF THE VALVE AND FITTINGS INDUSTRY (MSS)

MSS SP-25	(1993) Standard Marking System for Valves, Fittings, Flanges and Unions
MSS SP-58	(1988) Pipe Hangers and Supports - Materials, Design and Manufacture
MSS SP-69	(1991) Pipe Hangers and Supports - Selection and Application
MSS SP-70	(1990) Cast Iron Gate Valves, Flanged and Threaded Ends
MSS SP-71	(1990) Cast Iron Swing Check Valves, Flanges and Threaded Ends
MSS SP-80	(1987) Bronze Gate, Globe, Angle and Check Valves
MSS SP-85	(1985) Cast Iron Globe & Angle Valves Flanged and Threaded Ends

NATIONAL ASSOCIATION OF PLUMBING-HEATING-COOLING CONTRACTORS (NAPHCC)

NAPHCC-01	(1993) National Standard Plumbing Code Non-Illustrated Edition

NATIONAL ELECTRICAL MANUFACTURERS ASSOCIATION (NEMA)

NEMA 250	(1991) Enclosures for Electrical Equipment (1000 Volts Maximum)

1.2 SUBMITTALS

Government approval is required for submittals with a "GA" designation; submittals having an "FIO" designation are for information only. The following shall be submitted in accordance with Section 01330 SUBMITTAL PROCEDURES:

SD-01 Data

Spare Parts; FIO.

Spare parts data for each different item of material and equipment specified, after approval of the related submittals and not later than 3 months prior to the date of beneficial occupancy. The data shall include a complete list of parts and supplies, with current unit prices and source of supply.

Welding Procedures and Qualifications; FIO.

Six copies of qualified procedures and list of names and identification symbols of qualified welders and welding operators, prior to welding operations.

SD-04 Drawings

Heating System; GA.

Detail drawings consisting of a complete list of equipment and material, including manufacturer's descriptive and technical literature, performance charts and curves, catalog cuts, and installation instructions. Drawings shall also contain complete wiring and schematic diagrams and any other details required to demonstrate that the system has been coordinated and will properly function as a unit. Drawings shall show proposed layout and anchorage of equipment and appurtenances and equipment relationship to other parts of the work including clearances for maintenance and operation.

SD-06 Instructions

Framed Instructions; GA.

Proposed diagrams, instructions, and other sheets, prior to posting. The instructions shall show wiring and control diagrams and complete layout of the entire system. The instructions shall include, in typed form, condensed operating instructions explaining preventive maintenance procedures, methods of checking the system for normal safe operation and procedures for safely starting and stopping the system.

SD-09 Reports

Performance Tests; FIO.

Performance test reports in booklet form showing all field tests performed to adjust each component and all field tests performed to prove compliance with the specified performance criteria, upon completion and testing of the installed system. Each test report shall indicate the final position of controls.

Water Treatment Tests; FIO.

The water quality test report shall identify the chemical composition of the heating water. The report shall include a comparison of the condition of the water with the chemical company's recommended conditions. Any required corrective action shall be documented within the report.

SD-13 Certificates

Bolts; FIO.

Written certification that the bolts furnished comply with the requirements of this specification, provided by the bolt manufacturer. The certification shall include illustrations of product-required markings, the date of manufacture, and the number of each type of bolt to be furnished based on this certification.

SD-19 Operation and Maintenance Manuals

Heating System; FIO.

Six copies of operation and six copies of maintenance manuals for the equipment furnished. One complete set, prior to performance testing and the remainder upon acceptance. Operating manuals shall detail the step-by-step procedures required for system startup, operation, and shutdown. Operating manuals shall include the manufacturer's name, model number, parts list, and brief description of all equipment and their basic operating features. Maintenance manuals shall list routine maintenance procedures, water treatment procedures, possible breakdowns and repairs, and troubleshooting guides. Maintenance manuals shall include piping and equipment layout and simplified wiring and control diagrams of the system as installed. Manuals shall be provided prior to the field training course.

1.3 QUALIFICATIONS

Procedures and welders shall be qualified in accordance with the code under which the welding is specified to be accomplished.

1.4 DELIVERY AND STORAGE

All equipment delivered and placed in storage shall be stored with protection from the weather, excessive humidity and excessive temperature variation; and dirt, dust, or other contaminants.

1.5 FIELD MEASUREMENTS

The Contractor shall become familiar with all details of the work, verify all dimensions in the field, and shall advise the Contracting Officer of any discrepancy before performing the work.

PART 2 PRODUCTS

2.1 GENERAL MATERIAL AND EQUIPMENT REQUIREMENTS

2.1.1 Standard Products

Materials and equipment shall be the standard products of a manufacturer regularly engaged in the manufacture of such products and shall essentially duplicate items that have been in satisfactory use for at least 2 years prior to bid opening. Equipment shall be supported by a service organization that is, in the opinion of the Contracting Officer, reasonably convenient to the site.

2.1.2 Nameplates

Each major item of equipment shall have the manufacturer's name, address, type or style, model or serial number, and catalog number on a plate secured to the item of equipment.

2.1.3 Equipment Guards and Access

Belts, pulleys, chains, gears, couplings, projecting setscrews, keys, and other rotating parts exposed to personnel contact shall be fully enclosed or guarded in accordance with OSHA requirements. High temperature equipment and piping exposed to contact by personnel or where it creates a potential fire hazard shall be properly guarded or covered with insulation of a type specified.

2.1.4 Asbestos Prohibition

Asbestos and asbestos-containing products shall not be used.

2.1.5 Electrical Work

Electrical motor driven equipment specified shall be provided complete with motors, motor starters, and controls. Electric equipment (including motor efficiencies), and wiring shall be in accordance with Section 16415 ELECTRICAL WORK, INTERIOR. Standard motors shall be used. Electrical characteristics shall be as specified or indicated. Motor starters shall be provided complete with thermal overload protection and other appurtenances necessary for the motor control specified. Each motor shall be of sufficient size to drive the equipment at the specified capacity without exceeding the nameplate rating of the motor. Manual or automatic control and protective or signal devices required for the operation specified, and any control wiring, conduit, and connection to power required for controls and devices but not shown shall be provided.

2.2 PIPING, TUBING, AND FITTINGS

2.2.1 General

Piping, tubing, and fittings shall be as follows:

a. Low temperature water piping shall be black steel or copper tubing with cast iron, malleable iron or steel, solder-joint, flared-tube or grooved mechanical joint fittings.

b. Omitted

c. Omitted

d. High temperature water piping shall be black steel, Schedule 80.

e. Vent piping shall be black steel, Schedule 40, with black malleable iron fittings.

2.2.2 Steel Pipe

Pipe shall conform to ASTM A 53 or ASTM A 106, Grade A or B, black steel, Schedule 40, unless otherwise specified. Steel pipe to be bent shall be ASTM A 53, Grade A, standard, or Grade B, extra strong weight.

2.2.3 High Temperature Water Piping

Piping shall be Type S for 40 mm and smaller, Type S or Type E for pipe 50 mm and larger, Schedule 80 steel conforming to ASTM A 53, Grade B; or to ASTM A 106, Grade B.

2.2.4 Gauge Piping

Piping shall be copper tubing for low temperature water. Black steel, ASTM A 106, seamless, Grade A pipe shall be used for high temperature.

2.2.5 Copper Tubing

Tubing shall conform to ASTM B 88, Type K or L. Tubing for compressed air tubing shall conform to ASTM B 251.

2.2.6 High Temperature Water Fittings

Fittings shall be steel welding fittings conforming in physical and chemical properties to ASTM A 234. Buttwelding fittings shall conform to ASME B16.9. Socket welded fittings shall conform to ASME B16.1. Screwed fittings, when required, shall be black forged steel, 2000-pound class, conforming to ASME B16.11. Flanges shall be serrated or raised-faced type.

2.2.7 Malleable Iron Pipe Fittings

Fittings shall conform to ASME B16.3, type required to match adjacent piping.

2.2.8 Cast Iron Pipe Fittings

Fittings shall conform to ASME B16.1 or ASME B16.4 type required to match adjacent piping.

2.2.9 Steel Pipe Fittings

Fittings shall have the manufacturer's trademark affixed in accordance with MSS SP-25 so as to permanently identify the manufacturer.

2.2.9.1 Welded Fittings

Welded fittings shall conform to ASTM A 234 with WPA marking. Butt welded fittings shall conform to ASME B16.9, and socket welded fittings shall conform to ASME B16.11.

2.2.9.2 Grooved Mechanical Fittings

Standard fittings shall be of malleable iron conforming to ASTM A 47, Grade 32510, or ductile iron conforming to ASTM A 536, Grade 65-45-12. Fittings may also be constructed of steel, conforming to ASTM A 106, Grade B or ASTM A 53.

2.2.9.3 Grooved Mechanical Pipe Joints

Pipe joints shall conform to AWWA C606. Grooved mechanical joint fittings shall be full flow factory manufactured forged steel fittings. Fittings, couplings, gaskets, and pipe grooving tool or grooved end pipe shall be products of the same manufacturer. Mechanical pipe couplings shall be of the bolted type and shall consist of a housing fabricated in two or more parts, a synthetic rubber gasket, and nuts and bolts to secure unit together. Housings shall be of malleable iron conforming to ASTM A 47, Grade 32510 or ductile iron conforming to ASTM A 536, Grade 65-45-12. Coupling nuts and bolts shall be of steel and conform to ASTM A 183. Gaskets shall be of molded synthetic rubber, Type EPDM with central cavity, pressure responsive configuration and shall conform to ASTM D 2000.

2.2.10 Fittings for Copper Tubing

Wrought copper and bronze fittings shall conform to ASME B16.22 and ASTM B 75. Cast copper alloy fittings shall conform to ASME B16.18. Flared fittings shall conform to ASME B16.26 and ASTM B 62. Adapters may be used for connecting tubing to flanges and threaded ends of valves and equipment. Extracted brazed tee joints produced with an acceptable tool and installed as recommended by the manufacturer may be used.

2.2.11 Steel Flanges

Flanged fittings including flanges, bolts, nuts, bolt patterns., etc. shall be in accordance with ASME B16.5 class 150 and shall have the manufacturers trademark affixed in accordance with MSS SP-25. Flange material shall conform to ASTM A 105. Flanges for high temperature water systems shall be serrated or raised-face type. Blind flange material shall conform to ASTM A 516 cold service and ASTM A 515 for hot service. Bolts shall be high strength or intermediate strength with material conforming to ASTM A 193.

2.2.12 Pipe Threads

Pipe threads shall conform to ASME B1.20.1.

2.2.13 Nipples

Nipples shall conform to ASTM A 733 or ASTM B 687, standard weight.

2.2.14 Unions

Unions shall conform to FS WW-U-531 or FS WW-U-516, type to match adjacent piping.

2.2.15 Adapters

Adapters for copper tubing shall be brass or bronze for soldered fittings.

2.2.16 Dielectric Unions

Unions shall conform to the tensile strength and dimensional requirements specified in FS WW-U-531. Unions shall have metal connections on both ends to match adjacent piping. Metal parts of dielectric unions shall be separated so that the electrical current is below 1 percent of the galvanic current which would exist upon metal-to-metal contact.

2.2.17 Grooved Mechanical Joints

Rigid grooved pipe joints may be provided in lieu of unions, welded, flanges or screwed piping connections at chilled water pumps and allied equipment, and on aboveground pipelines in serviceable locations, if the temperature of the circulating medium does not exceed 110 degrees C. Flexible grooved joints will not be permitted, except as vibration isolators adjacent to mechanical equipment. Rigid grooved joints shall incorporate an angle bolt pad design which maintains metal-to-metal contact with equal amount of pad offset of housings upon installation to insure positive rigid clamping of the pipe. Designs which can only clamp on the bottom of the groove or which utilize gripping teeth or jaws, or which use misaligned housing bolt holes, or which require a torque wrench or torque specifications, will not be permitted. Rigid grooved pipe couplings shall be used with grooved end pipes, fittings, valves and strainers. Rigid couplings shall be designed for not less than 862 kPa service and appropriate for static head plus the pumping head, and shall provide a watertight joint. Grooved fittings and couplings, and grooving tools shall be provided from the same manufacturer. Segmentally welded elbows shall not be used. Grooves shall be prepared in accordance with the coupling manufacturer's latest published standards. Grooving shall be performed by qualified grooving operators having demonstrated proper grooving procedures in accordance with the tool manufacturer's recommendations. The Contracting Officer shall be notified 24 hours in advance of test to demonstrate operator's capability, and the test shall be performed at the work site, if practical, or at a site agreed upon. The operator shall demonstrate the ability to properly adjust the grooving tool, groove the pipe, and verify the groove dimensions in accordance with the coupling manufacturer's specifications.

2.2.18 Flexible Pipe Connectors

Flexible pipe connectors shall be designed for 1.034 MPa or 1.034 MPa service as appropriate for the static head plus the system head, and 121 degrees C. Connectors shall be installed where indicated. The flexible section shall be constructed of rubber, tetrafluoroethylene resin, or corrosion-resisting steel, bronze, monel, or galvanized steel. Materials used and the configuration shall be suitable for the pressure, vacuum, temperature, and circulating medium. The flexible section may have threaded, welded, soldered, flanged, grooved, or socket ends. Flanged assemblies shall be equipped with limit bolts to restrict maximum travel to the manufacturer's standard limits. Unless otherwise indicated, the length of the flexible connectors shall be as recommended by the manufacturer for the service intended. Internal sleeves or liners, compatible with circulating medium, shall be provided when recommended by the manufacturer. Covers to protect the bellows shall be provided where indicated.

2.3 MATERIALS AND ACCESSORIES

2.3.1 Iron and Steel Sheets

2.3.1.1 Galvanized Iron and Steel

Galvanized iron and steel shall conform to ASTM A 527, ASTM A 528, or ASTM A 642, with general requirements conforming to ASTM A 525. Gauge numbers specified are Manufacturer's Standard Gauge.

2.3.1.2 Uncoated (Black) Steel

Uncoated (black) steel shall conform to ASTM A 366 or ASTM A 569, composition, condition, and finish best suited to the intended use. Gauge numbers specified refer to Manufacturer's Standard Gauge.

2.3.2 Solder

Solder shall conform to ASTM B 32. Solder and flux shall be lead free.

2.3.3 Solder, Silver

Silver solder shall conform to FS QQ-B-654.

2.3.4 Thermometers

Thermometers shall have brass, malleable iron, or aluminum alloy case and frame, clear protective face, permanently stabilized glass tube with indicating-fluid column, white face, black numbers, and a 225 mm scale, and thermometers shall have rigid stems with straight, angular, or inclined pattern.

2.3.5 Gauges

Gauges shall conform to ASME B40.1.

2.3.6 Gaskets for Flanges

Composition gaskets shall conform to ASME B16.21. Gaskets shall be nonasbestos compressed material in accordance with ASME B16.21, 6.6 mm thickness, full face or self-centering flat ring type. Gaskets shall contain aramid fibers bonded with styrene butadiene rubber (SBR) or nitrile butadiene rubber (NBR). NBR binder shall be used for hydrocarbon service. Gaskets shall be suitable for pressure and temperatures of piping system.

2.3.7 Polyethylene Tubing

Low-density virgin polyethylene shall conform to ASTM D 1248, Type I, Category 5, Class B or C.

2.3.8 Omitted

2.3.9 Expansion Joints

Expansion joints shall provide for either single or double slip of connected pipes, as required or indicated, and for not less than the traverse indicated. Joints shall be designed for hot water working pressure not less than 861.8 kPa and shall be in accordance with applicable requirements of EJMA-01 and ASME B31.1. Joints shall be designed for packing injection under full line pressure. End connections shall be flanged or beveled for welding as indicated. Joints shall be provided with anchor base where required or indicated. Where adjoining pipe is carbon steel, the sliding slip shall be seamless steel plated with a minimum of 0 0508 mm of hard chrome conforming to ASTM B 650. Joint components shall be fabricated from material equivalent to that of the pipeline. Initial settings shall be made in accordance with manufacturer's recommendations to compensate for ambient temperature at time of installation. Pipe alignment guides shall be installed as recommended by joint manufacturer, but in any case shall not be more than 1.5 m from expansion joint except for lines 100 mm or smaller, guides shall be installed not more than 600 mm from the joint. Service outlets shall be provided where indicated.

2.3.10 Omitted

2.3.11 Pipe Hangers, Inserts, and Supports

Pipe hangers, inserts, and supports shall conform to MSS SP-58 and MSS SP-69.

2.4 VALVES FOR LOW TEMPERATURE WATER HEATING

2.4.1 Check Valves

Sizes 65 mm and less, bronze shall conform to MSS SP-80, Type 3 or 4, Class 125. Sizes 80 mm through 300 mm, cast iron shall conform to MSS SP-71, Type III or IV, Class 125.

2.4.2 Globe Valves

Sizes 65 mm and less, bronze shall conform to MSS SP-80, Type 1, 2 or 3, Class 125. Sizes 80 mm through 300 mm, cast iron shall conform to MSS SP-85, Type III, Class 125.

2.4.3 Angle Valves

Sizes 65 mm and less, bronze shall conform to MSS SP-80, Type 1, 2 or 3, Class 125. Sizes 80 mm through 300 mm, cast iron shall conform to MSS SP-85, Type III, Class 125.

2.4.4 Gate Valves

Sizes 65 mm and less, bronze shall conform to MSS SP-80, Type 1 or 2, Class 125. Sizes 80 mm through 1200 mm, cast iron shall conform to MSS SP-70, Type I, Class 125, Design OT or OF (OS&Y), bronze trim.

2.4.5 Air Vents

Air vents shall be provided at all piping high points in water systems, with block valve in inlet and internal check valve to allow air vent to be isolated for cleaning and inspection. Outlet connection shall be piped to nearest open site or suitable drain, or terminated 300 mm above finished grade. Pressure rating of air vent shall match pressure rating of piping system. Body and cover shall be cast iron or semi-steel with stainless steel or copper float and stainless steel or bronze internal parts. Air vents installed in piping in chase walls or other inaccessible places shall be provided with an access panel.

2.4.6 Balancing Valves

Balancing valves shall have meter connections with positive shutoff valves. An integral pointer shall register degree of valve opening. Valves shall be calibrated so that flow in liters per minute can be determined when valve opening in degrees and pressure differential across valve is known. Each balancing valve shall be constructed with internal seals to prevent leakage and shall be supplied with preformed insulation. Valves shall be suitable for 121 degrees C temperature and working pressure of the pipe in which installed. Valve bodies shall be provided with tapped openings and pipe extensions with shutoff valves outside of pipe insulation. The pipe extensions shall be provided with quick connecting hose fittings for a portable meter to measure the pressure differential. One portable differential meter shall be furnished. The meter suitable for the operating pressure specified shall be complete with hoses, vent, and shutoff valves and carrying case. In lieu of the balancing valve with integral metering connections, a ball valve or plug valve with a separately installed orifice plate or venturi tube may be used for balancing. Plug valves and ball valves 200 mm or larger shall be provided with manual gear operators with position indicators.

2.4.7 Automatic Flow Control Valves

The valves shall be designed to be sensitive to pressure differential across the valve to provide the required opening. The valves shall be selected for the flow required and provided with a permanent nameplate or tag carrying a record of the factory-determined flow rate and flow control pressure levels. Valves shall control the flow within 5 percent of the tag rating. Valves shall be suitable for the maximum operating pressure of 862 kPa (125 psi) or 150 percent of the system operating pressure, whichever is greater. Valves shall be suitable for the maximum system operating temperature and pressure. Valve materials shall be same as specified for low temperature heating system check, globe, angle and gate valves. Valve operator shall be the electric motor type or pneumatic type as applicable. Valve operator shall be capable of positive shutoff against the system pump head.

2.4.8 Butterfly Valves

Butterfly valves shall be 2-flange type or lug wafer type, and shall be bubbletight at 1135 kPa (150 psig). Valve bodies shall be cast iron, malleable iron, or steel. ASTM A 167, Type 404 or Type 316, corrosion resisting steel stems, bronze, or corrosion resisting steel discs, and synthetic rubber seats shall be provided. Valves smaller than 200 mm (8 inches) shall have throttling handles with a minimum of seven locking positions. Valves 200 mm (8 inches) and larger shall have totally enclosed manual gear operators with adjustable balance return stops and position indicators. Valves in insulated lines shall have extended neck to accommodate insulation thickness.

2.5 VALVES FOR HIGH AND MEDIUM TEMPERATURE WATER SYSTEMS

2.5.1 Check Valves

Sizes 65 mm and less, forged steel shall conform to ASTM A 105, Class 800 minimum, socket or butt welded. Sizes 80 mm through 600 mm, steel shall conform to ASME B16.34, Class 300 minimum, flanged ends, swing disc; water or gas service to 454 degrees C.

2.5.2 Globe Valves

Sizes 65 mm and less, forged steel shall conform to ASTM A 105, Class 800 minimum, socket or butt welded. Sizes 80 mm through 600 mm, steel shall conform to ASME B16.34, Class 300 minimum, flanged ends; water or service to 454 degrees C.

2.5.3 Angle Valves

Sizes 65 mm and less, forged steel shall conform to ASTM A 105, Class 800 minimum, socket or butt welded. Sizes 80 mm through 600 mm, steel shall conform to ASME B16.34, Class 300 minimum, flanged ends; water or gas service to 454 degrees C.

2.5.4 Gate Valves

Sizes 65 mm and less, forged steel shall conform to ASTM A 105, Class 800 minimum, socket or butt welded. Sizes 80 mm through 600 mm, steel shall conform to ASME B16.34, Class 300 minimum, flanged ends; water or gas service to 454 degrees C. Gate shall be split wedge (double disc) type.

2.6 COLD WATER CONNECTIONS

Connections shall be provided which include consecutively in line a strainer, backflow prevention device, and water pressure regulator. The backflow prevention device shall be provided as indicated and in compliance with Section 15400 PLUMBING, GENERAL PURPOSE.

2.6.1 Strainers

Basket or Y-type strainers shall be the same size as the pipelines in which they are installed. Strainer bodies shall be rated for 862 kPa service, with bottoms drilled and plugged. Bodies shall have arrows cast on the sides to indicate the direction of flow. Each strainer shall be equipped with a removable cover and sediment basket. Basket shall not be less than 0.795 mm and shall have perforations to provide a net free area through the basket of at least four times that of the entering pipe.

2.6.2 Pressure Regulating Valve

Valve shall be a type that will not stick nor allow pressure to build up on the low side. Valve shall be set to maintain a terminal pressure approximately 35 kPa in excess of the static head on the system and shall

operate within a 138 kPa variation regardless of initial pressure and without objectionable noise under any condition of operation.

2.7 OMITTED

2.8 EXPANSION TANK

Pressurization system shall include a replaceable diaphragm-type captive air expansion tank which will accommodate the expanded water of the system generated within the normal operating temperature range, limiting this pressure increase at all components in the system to the maximum allowable pressure at those components. The only air in the system shall be the permanent sealed-in air cushion contained in the diaphragm-type tank. Sizes shall be as indicated. Expansion tank shall be welded steel, constructed, tested and stamped in accordance with ASME BPV VIII Div 1 for a working pressure of 862 kPa and precharged to the minimum operating pressure. Tank air chamber shall be fitted with an air charging valve. Tank shall be supported by steel legs or bases for vertical installation or steel saddles for horizontal installations.

2.9 AIR SEPARATOR TANK

External air separation tank shall be steel, constructed, tested, and stamped in accordance with ASME BPV VIII Div 1 for a working pressure of 862 kPa. The capacity of the air separation tank indicated is minimum.

2.10 OMITTED

2.11 HEAT EXCHANGERS

Heat exchangers shall be multiple pass shell and U-tube type or plate and frame type as indicated, to provide low temperature hot water for the heating system when supplied with high temperature hot water at the temperatures and pressures indicated. Temperature and pressure for shell and U-tube exchangers shall not exceed 221 degrees C and 2.76 MPa for high temperature hot water. Exchangers shall be constructed in accordance with ASME BPV VIII Div 1 and certified with ASME stamp secured to unit. U-tube bundles shall be completely removable for cleaning and tube replacement and shall be free to expand with shell. Shells shall be of seamless steel pipe or welded steel construction and tubes shall be seamless tubing as specified below unless otherwise indicated. Tube connections to plates shall be leakproof. Saddles or cradles shall be provided to mount shell and U-tube exchangers. Design fouling factor shall be 0.00025.

2.11.1 Omitted

2.11.2 High Temperature Water Heat Exchangers, Shell and U-tube Type

Exchangers shall operate with low temperature water in shell and high temperature water in tubes. Shell side shall be designed for 1.03 MPa working pressure and factory tested at 2.07 MPa. Tubes shall be designed for 2.76 MPa working pressure and an operating temperature of 232 degrees C. High and low

temperature water and pressure relief connections shall be located in accordance with the manufacturer's standard practice. Water connections larger than 80 mm shall be ASME 4.14 MPa flanged for high temperature water, and ASME 4.03 MPa flanged for low temperature water. Water pressure loss through clean tubes shall not exceed 41 kPa unless otherwise indicated. Minimum water velocity in tubes shall be 300 mm/second (1 fps) and assure turbulent flow. Tubes shall be cupronickel or inhibited admiralty, constructed in accordance with ASTM B 395, suitable for the temperatures and pressures specified. Tubes shall be not less than 20 mm unless otherwise indicated.

2.12 SYSTEM EQUIPMENT AND ACCESSORIES

2.12.1 Circulating Pumps

Pumps for hot water shall be of the single-stage centrifugal type, electrically driven. Pumps shall be supported on a concrete. Pumps shall be either integrally mounted with the motor or direct-connected by means of a flexible-shaft coupling on a cast iron, or steel sub-base. Pump housing shall be of close grained cast iron. Shaft shall be carbon or alloy steel, turned and ground. Shaft seal shall be mechanical-seal or stuffing-box type. Impeller, impeller wearing rings, glands, casing wear rings, and shaft sleeve shall be bronze. Bearings shall be ball-, roller-, or oil-lubricated, bronze-sleeve type, and shall be sealed or isolated to prevent loss of oil or entrance of dirt or water. Motor shall be of a type approved by the manufacturer of the pump.

2.12.2 Omitted

2.12.3 Pressure Gauges and Thermometers

Gauges shall be provided for each heat exchanger and piping as indicated. A thermometer and pressure gauge shall be provided on the high temperature water supply and return mains. Thermometers shall be separable socket type.

2.12.4 Omitted

2.12.5 Pressure Relief Valves

One or more pressure relief valves shall be provided for each heat exchanger in accordance with ASME BPV VIII Div 1. The aggregate relieving capacity of the relief valves shall be not less than that required by the above code. Discharge from the valves shall be installed as indicated. Relief valves for high temperature water heat exchanger shall be installed on the heat exchanger shell.

2.12.6 Drains

A drain connection with 20 mm hose bib shall be installed at the lowest point in the low temperature water return main near the heat exchanger. In addition, threaded drain connections with threaded cap or plug shall be installed wherever required for thorough draining of the low temperature water system.

2.12.7 Strainers

Basket or Y-type strainer-body connections shall be the same size as the pipe lines in which the connections are installed. The bodies shall have arrows clearly cast on the sides to indicate the direction of flow. Each strainer shall be equipped with an easily removable cover and sediment basket. The body or bottom opening shall be equipped with nipple and gate valve for blowdown. The flow shall be into the basket and out through the perforations. For high temperature water systems, only cast steel bodies shall be used.

2.13 INSULATION

Shop and field applied insulation shall be as specified in Section 15080 THERMAL INSULATION FOR MECHANICAL SYSTEMS.

2.14 FACTORY PAINTED EXPOSED SPACE HEATING EQUIPMENT

Radiator and convector enclosures shall be coated with the manufacturer's standard rust inhibiting primer for painting in the field as specified in Section 09900 PAINTING, GENERAL. All other exposed heating equipment shall be painted at the factory with the manufacturer's standard primer and enamel finish.

2.15 CONVECTORS

The convector shall be the type and size indicated. The supply and return connections shall be the same size. Cast iron radiators and nonferrous convectors shall be tested hydrostatically at the factory and proved tight under a pressure of not less than 862 kPa. A certified report of these tests shall be furnished in accordance with paragraph SUBMITTALS.

2.15.1 Omitted

2.15.2 Omitted

2.15.3 Convectors

Convectors shall be constructed of cast iron or of nonferrous alloys, and shall be installed where indicated. Capacity of convectors shall be as indicated. Overall space requirements for convectors shall not be greater than the space provided. Convectors shall be complete with heating elements and enclosing cabinets having bottom recirculating opening and top supply grille. Convector cabinets shall be constructed of black sheet steel not less than 0.912 mm.

2.15.4 Convectors Control

The space temperature shall be maintained automatically by regulating water flow to the convectors by utilizing a modulating control valve. Controls shall be provided as specified in Section 15951 DIRECT DIGITAL CONTROL FOR HVAC2.

2.16 UNIT HEATERS

Heaters shall be as specified below, and shall have a heating capacity not in excess of 125 percent of the capacity indicated.

2.16.1 Propeller Fan Heaters

Heaters shall be designed for suspension and arranged for horizontal or vertical discharge of air as indicated. Casings shall be not less than 0.912 mm black steel and finished with lacquer or enamel. Suitable stationary deflectors shall be provided to assure proper air and heat penetration capacity at floor level based on established design temperature. Suspension from heating pipes will not be permitted. Fans for vertical discharge type heaters shall operate at speeds not in excess of 1,200 rpm, except that units with 84.4 MJ output capacity or less may operate at speeds up to 1,800 rpm. Horizontal discharge type unit heaters shall have discharge or face velocities not in excess of the following:

Unit Capacity, Liters per Second	Face Velocity, Meters per Second
Up to 472 (1000)	4.06 (800)
473 (1001)	4.57 (900)
1417 (3001)	5.08 (1,000)]

Unit Capacity, cfm	Face Velocity, fpm
Up to 1,000	800
1,001 to 3,000	900
3,001 and over	1,000

2.16.2 Centrifugal Fan Heaters

Heaters shall be arranged for floor or ceiling mounting as indicated. Heating elements and fans shall be housed in steel cabinets of sectionalized steel plates or reinforced with angle-iron frames. Cabinets shall be constructed of not lighter than 1.27 mm black steel. Each unit heater shall be provided with a means of diffusing and distributing the air. Fans shall be mounted on a common shaft, with one fan to each air outlet. Fan shaft shall be equipped with self-aligning ball, roller, or sleeve bearings and accessible means of lubrication. Fan shaft may be either directly connected to the driving motor or indirectly connected by adjustable V-belt drive rated at 150 percent of motor capacity. All fans in any one unit heater shall be the same size.

2.16.3 Heating Elements

Heating coils shall be as specified in Section 15895 AIR SUPPLY, DISTRIBUTION, VENTILATION, AND EXHAUST SYSTEM for types indicated. Coils shall be suitable for use with water up to 121 degrees C.

2.16.4 Motors

Motors shall be provided with NEMA 250 general purpose enclosure. Motors and motor controls shall otherwise be as specified in Section 16415 ELECTRICAL WORK, INTERIOR.

2.16.5 Motor Switches

Motors shall be provided with manual selection switches with "Off," and "Automatic" positions and shall be equipped with thermal overload protection.

2.16.6 Controls

Controls shall be provided as specified in Section 15951 DIRECT DIGITAL CONTROL FOR HVAC.

2.17 OMITTED

2.18 WATER TREATMENT SYSTEM

The water treatment system shall be capable of manually feeding chemicals into the heating system to prevent corrosion and scale within the heat exchanger and piping system. All water treatment equipment and chemicals shall be furnished and installed by a water treatment company regularly engaged in the installation of water treatment equipment and the provision of water treatment chemicals based upon water condition analyses. The water treatment company shall provide a water sample analysis taken from the building site, each month for 1 year.

2.18.1 Chemical Shot Feeder

A shot feeder shall be provided as indicated. Size and capacity of feeder shall be based upon local requirements and water analysis. The feeder shall be furnished with an air vent, gauge glass, funnel, valves, fittings, and piping. All materials of construction shall be compatible with the chemicals being used.

2.18.2 Chemicals

The chemical company shall provide pretreatment chemicals that will remove and permit flushing of mill scale, oil, grease, and other foreign matter from the water heating system. The chemical company shall also provide all treatment chemicals required for the initial fill of the system and for a period of one year of operation. The chemical company shall determine the correct chemicals and concentrations required for the water treatment. The chemicals shall not be proprietary and shall meet required Federal, State, and local environmental regulations for the treatment of heating water systems and discharge to the sanitary sewer. The chemicals shall remain stable throughout the operating temperature range of the system, and shall be compatible with pump seals and other elements of the system.

2.18.3 Glycol Solutions

A propylene glycol solution to provide –30 degrees F protection shall be provided. The glycol shall contain corrosion inhibitors. Silicate based inhibitors shall not be used. The solution shall be compatible with pump seals, other elements of the system, and all water treatment chemicals used within the system.

2.18.4 Test Kits

All required test kits and reagents for determining the proper water conditions shall be provided.

PART 3 EXECUTION

3.1 INSTALLATION

All work shall be installed as indicated and in accordance with the manufacturer's diagrams and recommendations.

3.2 FIELD PAINTING

Field painting of exposed pipe shall be as specified in Section 09900 PAINTING, GENERAL. Field painting of factory primed equipment shall be as specified in Section 09900 PAINTING, GENERAL.

3.3 WELDING

Piping shall be welded in accordance with qualified procedures using performance qualified welders and welding operators. Procedures and welders shall be qualified in accordance with ASME BPV IX. Welding procedures qualified by others, and welders and welding operators qualified by another employer may be accepted as permitted by ASME B31.1. The Contracting Officer shall be notified 24 hours in advance of tests and the tests shall be performed at the work site if practical. The welder or welding operator shall apply his assigned symbol near each weld he makes as a permanent record. Structural members shall be welded in accordance with Section 05055 WELDING, STRUCTURAL.

3.4 PIPING

Unless otherwise specified, pipe and fittings installation shall conform to the requirements of ASME B31.1. Pipe shall be cut accurately to measurements established at the job site and worked into place without springing or forcing, completely clearing all windows, doors, and other openings. Cuttings or other weakening of the building structure to facilitate piping installation will not be permitted without written approval. Pipe or tubing shall be cut square, shall have burrs removed by reaming, and shall be so installed as to permit free expansion and contraction without causing damage to building structure, pipe, joints, or hangers. Changes in direction shall be made with factory made fittings, except that bending of pipe up to 100 mm will be permitted, provided a pipe bender is used and wide sweep bends are formed. The center line radius of bends shall not be less than six diameters of the pipe. Bent pipe showing kinks, wrinkles, flattening, or other malformations will not be accepted. Vent pipes shall be installed through the roof as indicated and shall be flashed as specified. Horizontal mains shall pitch up or down in the direction of flow as indicated. The grade shall be not less than 25 mm in 12 m. Reducing fittings shall be used for changes in pipe sizes. Open ends of pipelines and equipment shall be capped or plugged during installation to keep

dirt or other foreign materials out of the systems. Pipe not otherwise specified shall be uncoated. Unions and other components for copper pipe or tubing shall be brass or bronze. Connections between ferrous and copper piping shall be electrically isolated using dielectric unions.

3.4.1 Joints

Except as otherwise specified, joints used on steel pipe shall be threaded for fittings 25 mm and smaller; threaded or welded for 32 mm up through 65 mm; and flanged or welded for 80 mm and larger. Joints between sections of copper tubing or copper pipe shall be flared or sweated. Pipe and fittings 32 mm and larger installed in inaccessible conduits or trenches beneath concrete floor slabs shall be welded. Unless otherwise specified, connections to equipment shall be made with black malleable iron unions for pipe 65 mm or smaller in diameter, and with flanges for pipe 80 mm or larger in diameter.

3.4.2 Low Temperature Systems

Piping may have threaded, welded, flanged or flared, sweated, or grooved mechanical joints as applicable and as specified. Reducing fittings shall be used for changes in pipe sizes. In horizontal lines, reducing fittings shall be the eccentric type to maintain the top of the adjoining pipes at the same level.

3.4.3 Omitted

3.4.4 High And Medium Temperature Systems

Temperature systems shall have welded joints to the maximum extent practicable, except screwed joints and fittings may be used at connections to equipment and on piping 65 mm and smaller. Equipment connections 80 mm and larger shall be flanged. Piping connections 80 mm and larger may be welded or flanged. In horizontal lines, reducing fittings shall be the eccentric type to maintain the tops of adjoining pipes at the same level. Grooved mechanical joints shall not be used.

3.4.5 Threaded Joints

Threaded joints shall be made with tapered threads properly cut, and shall be made tight with PTFE tape complying with ASTM D 3308, or equivalent thread joint compound applied to the male threads only, and in no case to the fittings.

3.4.6 Welded Joints

Joints shall be fusion-welded unless otherwise required. Changes in direction of piping shall be made with welding fittings only. Branch connection may be made with either welding tees or branch outlet fittings. Branch outlet fittings shall be forged, flared for improvement of flow where attached to the run, and reinforced against external strains.

3.4.7 Flanged Joints or Unions

Flanged joints or unions shall be provided in each line immediately preceding the connection to each piece of equipment or material requiring maintenance such as coils, pumps, control valves, and similar items. Flanged joints shall be faced true, provided with gaskets, and made square and tight. Full-faced gaskets shall be used with cast iron flanges.

3.4.8 Flared and Sweated Pipe and Tubing

Pipe and tubing shall be cut square and burrs shall be removed. Both inside of fittings and outside of tubing shall be cleaned with an abrasive before sweating. Care shall be taken to prevent annealing of fittings and hard drawn tubing when making connection. Installation shall be made in accordance with the manufacturer's recommendations. Changes in direction of piping shall be made with flared or soldered fittings only. Solder and flux shall be lead free. Joints for soldered fittings shall be made with silver solder or 95:5 tin-antimony solder. Cored solder shall not be used. Joints for flared fittings shall be of the compression pattern. Swing joints or offsets shall be provided on all branch connections, mains, and risers to provide for expansion and contraction forces without undue stress to the fittings or to short lengths of pipe or tubing.

3.4.9 Mechanical Tee Joint

An extracted mechanical tee joint may be made in copper tube. Joint shall be produced with an appropriate tool by drilling a pilot hole and drawing out the tube surface to form a collar having a minimum height of three times the thickness of the tube wall. To prevent the branch tube from being inserted beyond the depth of the extracted joint, dimpled depth stops shall be provided. The branch tube shall be notched for proper penetration into fitting to assure a free flow joint. Joints shall be brazed in accordance with NAPHCC-01. Soldered joints will not be permitted.

3.5 CONNECTIONS TO EQUIPMENT

Supply and return connections shall be provided by the Contractor unless otherwise indicated. Valves and traps shall be installed in accordance with the manufacturer's recommendations. Unless otherwise indicated, the size of the supply and return pipes to each piece of equipment shall be not smaller than the connections on the equipment. No bushed connections shall be permitted. Change in sizes shall be made with reducers or increasers only.

3.5.1 Low Temperature Water and Return Connections

Connections, unless otherwise indicated, shall be made with malleable iron unions for piping 65 mm or less in diameter and with flanges for pipe 80 mm or more in diameter.

3.5.2 High And Medium Temperature Water Connections

Connections shall be made with 13.8 MPa black malleable iron unions for pipe 20 mm or less in diameter and with flanges for pipe 25 mm and larger in diameter.

3.6 BRANCH CONNECTIONS

Branches shall pitch up or down as indicated, unless otherwise specified. Connection shall be made to insure unrestricted circulation, eliminate air pockets, and permit drainage of the system.

3.6.1 Low Temperature Water Branches

Branches taken from mains shall pitch with a grade of not less than 25 mm in 3 m.

3.6.2 Omitted

3.6.3 High Temperature Water Branches

Branches shall take off at 45 degrees in the direction of the fluid flow from the supply and return lines and should be branched from the top or upper half of the main line unless otherwise indicated. Abrupt reduction in pipe sizes shall be avoided.

3.7 RISERS

The location of risers is approximate. Exact locations of the risers shall be as approved.

3.8 SUPPORTS

3.8.1 General

Hangers used to support piping 50 mm and larger shall be fabricated to permit adequate adjustment after erection while supporting the load. Pipe guides and anchors shall be installed to keep pipes in accurate alignment, to direct the expansion movement, and to prevent buckling, swaying, and undue strain. All piping subjected to vertical movement when operating temperatures exceed ambient temperatures, shall be supported by variable spring hangers and supports or by constant support hangers.

3.8.1.1 Seismic Requirements for Pipe Supports, Standard Bracing

All piping and attached valves shall be supported and braced to resist seismic loads as specified under Section 13080 SEISMIC PROTECTION FOR MECHANICAL, ELECTRICAL EQUIPMENT and as shown on the drawings. Structural steel required for reinforcement to properly support piping, headers, and equipment but not shown shall be provided under this section. Material used for supports shall be as specified under Section 05120 STRUCTURAL STEEL.

3.8.1.2 Structural Attachments

Structural steel brackets required to support piping, headers, and equipment, but not shown, shall be provided under this section. Material and installation shall be as specified under Section 05120 STRUCTURAL STEEL. Pipe hanger loads suspended from steel joist panel points shall not exceed 222 N. Loads exceeding 222 N shall be suspended from panel points.

3.8.1.3 Multiple Pipe Runs

In the support of multiple pipe runs on a common base member, a clip or clamp shall be used where each pipe crosses the base support member. Spacing of the base support members shall not exceed the hanger and support spacing required for any individual pipe in the multiple pipe run.

3.8.2 Pipe Hangers, Inserts, and Supports

Pipe hangers, inserts and supports shall conform to MSS SP-58 and MSS SP-69, except as specified as follows:

a. Types 5, 12, and 26 shall not be used.

b. Type 3 shall not be used on insulated pipe which has a vapor barrier. Type 3 may be used on insulated pipe that does not have a vapor barrier if clamped directly to the pipe and if the clamp bottom does not extend through the insulation and the top clamp attachment does not contact the insulation during pipe movement.

c. Type 18 inserts shall be secured to concrete forms before concrete is placed. Continuous inserts which allow more adjustment may be used if they otherwise meet the requirements for Type 18 inserts.

d. Type 19 and 23 C-clamps shall be torqued per MSS SP-69 and have both locknuts and retaining devices furnished by the manufacturer. Field-fabricated C-clamp bodies or retaining devices are not acceptable.

e. Type 20 attachments used on angles and channels shall be furnished with an added malleable iron heel plate or adapter.

f. Type 24 may be used only on trapeze hanger systems or on fabricated frames.

g. Where Type 39 saddle or Type 40 shield are permitted for a particular pipe attachment application, the Type 39 saddle shall be used on all pipe 100 mm (4 inches) and larger.

h. Horizontal pipe supports shall be spaced as specified in MSS SP-69 and a support shall be installed not over 300 mm from the pipe fitting joint at each change in direction of the piping. Pipe supports shall be spaced not over 1.5 m apart at valves.

i. Vertical pipe shall be supported at each floor, except at slab-on-grade, and at intervals of not more than 4.5 m, except that pipe shall be supported not more than 2.4 m from end of risers, and at vent terminations.

j. Type 35 guides using steel, reinforced PTFE or graphite slides shall be provided where required to allow longitudinal pipe movement. Lateral restraints shall be provided as required. Slide materials shall be suitable for the system operating temperatures, atmospheric conditions and bearing loads encountered. Where steel slides do not require provision for restraint or lateral movement, an alternate guide method

may be used. On piping 100 mm and larger, a Type 39 saddle may be welded to the pipe and freely rest on a steel plate. On piping under 100 mm, a Type 40 protection shield may be attached to the pipe or insulation and freely rest on a steel slide plate. Where there are high system temperatures and welding to piping is not desirable, then the Type 35 guide shall include a pipe cradle, welded to the guide structure and strapped securely to the pipe. The pipe shall be separated from the slide material by at least 100 mm, or by an amount adequate for the insulation, which ever is greater.

k. Except for Type 3, pipe hangers on horizontal insulated pipe shall be the size of the outside diameter of the insulation.

3.8.3 Piping in Trenches

Piping shall be supported as indicated.

3.9 PIPE SLEEVES

3.9.1 Pipe Passing Through Concrete or Masonry

Pipe passing through concrete or masonry walls or concrete floors or roofs shall be provided with pipe sleeves fitted into place at the time of construction. Sleeves shall not be installed in structural members except where indicated or approved. Rectangular and square openings shall be as detailed. Each sleeve shall extend through its respective wall, floor, or roof, and shall be cut flush with each surface. Unless otherwise indicated, sleeves shall provide a minimum of 6 mm annular space between bare pipe or insulation surface and sleeves. Sleeves in bearing walls, waterproofing membrane floors, and wet areas shall be steel pipe or cast iron pipe. Sleeves in nonbearing walls, floors, or ceilings may be steel pipe, cast iron pipe, or galvanized sheet metal with lock-type longitudinal seam and of the metal thickness indicated. Except in pipe chases or interior walls, the annular space between pipe and sleeve or between jacket over insulation and sleeve in nonfire rated walls and floors shall be sealed as indicated and specified in Section 07900 JOINT SEALING. Penetrations in fire walls and floors shall be sealed in accordance with Section 07840 FIRESTOPPING.

3.9.2 Pipes Passing Through Waterproofing Membranes

Pipes passing through waterproofing membranes shall be installed through a 19.5 kg/square meter lead-flashing sleeve, a 4.9 kg/square meter copper sleeve, or a 0.813 mm thick aluminum sleeve, each having an integral skirt or flange. Flashing sleeve shall be suitably formed, and the skirt or flange shall extend 200 mm or more from the pipe and shall be set over the roof or floor membrane in a troweled coating of bituminous cement. The flashing sleeve shall extend up the pipe a minimum of 50 mm above the highest flood level of the roof or a minimum of 250 mm above the roof, whichever is greater, or 250 mm above the floor. The annular space between the flashing sleeve and the bare pipe or between the flashing sleeve and the metal-jacket-covered insulation shall be sealed as indicated. At the Contractor's option, pipes up to and including 250 mm in diameter passing through roof or floor waterproofing membrane may be installed through a cast iron sleeve with caulking recess, anchor lugs, flashing clamp device, and pressure ring with brass bolts. Waterproofing membrane shall be clamped into place and sealant shall be placed in the caulking recess.

3.9.3 Mechanical Seal Assembly

In lieu of a waterproofing clamping flange and caulking and sealing of annular space between pipe and sleeve or conduit and sleeve, a modular mechanical type sealing assembly may be installed. The seals shall consist of interlocking synthetic rubber links shaped to continuously fill the annular space between the pipe/conduit and sleeve with corrosion protected carbon steel bolts, nuts, and pressure plates. The links shall be loosely assembled with bolts to form a continuous rubber belt around the pipe with a pressure plate under each bolt head and each nut. After the seal assembly is properly positioned in the sleeve, tightening of the bolts shall cause the rubber sealing elements to expand and provide a watertight seal between the pipe/conduit and the sleeve. Each seal assembly shall be sized as recommended by the manufacturer to fit the pipe/conduit and sleeve involved. The Contractor electing to use the modular mechanical type seals shall provide sleeves of the proper diameters.

3.9.4 Counterflashing Alternate

As an alternate to caulking and sealing the annular space between the pipe and flashing sleeve or metal-jacket-covered insulation and flashing sleeve, counterflashing may be by standard roof coupling for threaded pipe up to 150 mm in diameter; lead-flashing sleeve for dry vents and turning the sleeve down into the pipe to form a waterproof joint; or tack-welded or banded-metal rain shield round the pipe and sealing as indicated.

3.9.5 Waterproofing Clamping Flange

Pipe passing through wall waterproofing membrane shall be sleeved as specified. In addition, a waterproofing clamping flange shall be installed as indicated.

3.9.6 Fire Seal

Where pipes pass through fire walls, fire partitions, fire rated pipe chase walls or floors above grade, a fire seal shall be provided as specified in Section 07840 FIRESTOPPING.

3.9.7 Escutcheons

Escutcheons shall be provided at all finished surfaces where exposed piping, bare or covered, passes through floors, walls, or ceilings, except in boiler, utility, or equipment rooms. Escutcheons shall be fastened securely to pipe sleeves or to extensions of sleeves without any part of sleeves being visible. Where sleeves project slightly from floors, special deep-type escutcheons shall be used. Escutcheons shall be chromium-plated iron or chromium-plated brass, either one-piece or split pattern, held in place by internal spring tension or setscrew.

3.10 ANCHORS

Anchors shall be provided where necessary or indicated to localize expansion or prevent undue strain on piping. Anchors shall consist of heavy steel collars with lugs and bolts for clamping and attaching anchor braces, unless otherwise indicated. Anchor braces shall be installed using turnbuckles where required. Supports, anchors, or stays shall not be attached in places where construction will be damaged by installation operations or by the weight or expansion of the pipeline.

3.11 PIPE EXPANSION

The expansion of supply and return pipes shall be provided for by changes in the direction of the run of pipe, by expansion loops, or by expansion joints as indicated. Low temperature water expansion joints may be the type specified. High temperature water system expansion joints may be one of the joint specified, except slip-tube type.

3.11.1 Expansion Loops

Expansion loops shall provide adequate expansion of the main straight runs of the system within the stress limits specified in ASME B31.1. The loops shall be cold-sprung and installed where required. Pipe guides shall be provided as required.

3.12 VALVES AND EQUIPMENT ACCESSORIES

3.12.1 Valves and Equipment

Valves shall be installed at the locations shown or specified, and where required for the proper functioning of the system as directed. Gate valves shall be used unless otherwise indicated, specified, or directed. Valves shall be installed with their stems horizontal to or above the main body of the valve. Valves used with ferrous piping shall have threaded or flanged ends and sweat-type connections for copper tubing.

3.12.2 Omitted

3.12.3 Thermometer Socket

A thermometer well shall be provided in each return line for each circuit in multicircuit systems.

3.12.4 Air Vents

Vents shall be installed where indicated, and on all high points and piping offsets where air can collect or pocket.

3.12.4.1 Water Air Vents

High, medium and low temperature water air vents shall be as indicated. Vent discharge lines shall be double-valved with globe valves and shall discharge into a funnel drain.

3.13 OMITTED

3.14 UNIT HEATERS

Unit heaters shall be installed as indicated and in accordance with the manufacturer's instructions.

3.15 INSULATION

Thickness of insulation materials for piping and equipment and application shall be in accordance with Section 15080 THERMAL INSULATION FOR MECHANICAL SYSTEMS.

3.16 TESTING AND CLEANING

3.16.1 Pressure Testing

The Contractor shall notify the Contracting Officer 14 days before the tests are to be conducted. The tests shall be performed in the presence of the Contracting Officer. The Contractor shall furnish all instruments and personnel required for the tests. Electricity, and water will be furnished by the Government. All test results shall be accepted before thermal insulation is installed. The entire low temperature heating system, including heat exchanger, radiators and fittings, shall be hydrostatically tested and proved tight under a pressure of 310 kPa for a period of 4 hours.

3.16.2 Cleaning

After the hydrostatic tests have been made and prior to the operating tests, the heat exchanger and piping shall be thoroughly cleaned by filling the system with a solution of 0.5 kg of caustic soda or 0.5 kg of trisodium phosphate per 200 L of water. Observe the proper safety precautions in the handling and use of these chemicals. The water shall be heated to approximately 66 degrees C, and the solution circulated in the system for a period of 48 hours, then drained and the system thoroughly flushed out with fresh water. Equipment shall be wiped clean, with all traces of oil, dust, dirt, or paint spots removed. The Contractor shall be responsible for maintaining the system in a clean condition until final acceptance. Bearings shall be lubricated with oil or grease as recommended by the manufacturer.

3.17 TESTING, ADJUSTING AND BALANCING

Except as specified herein, testing, adjusting, and balancing shall be in accordance with Section 15990 TESTING, ADJUSTING, AND BALANCING OF HVAC SYSTEMS.

3.18 MANUFACTURER'S SERVICES

Services of a manufacturer's representative who is experienced in the installation, adjustment, and operation of the equipment specified shall be provided. The representative shall supervise the installation, adjustment, and testing of the equipment.

3.19 FRAMED INSTRUCTIONS

Framed instructions containing wiring and control diagrams under glass or in laminated plastic shall be posted where directed. Condensed operating instructions, prepared in typed form, shall be framed as specified above and posted beside the diagrams. The framed instructions shall be posted before acceptance testing of the system.

3.20 FIELD TRAINING

A field training course shall be provided for designated operating and maintenance staff members. Training shall be provided for a total period of 8 hours of normal working time and shall start after the system is functionally complete but prior to final acceptance tests. Field training shall cover all of the items contained in the operating and maintenance manuals.

END OF SECTION

This page intentionally blank

SECTION 15650

CENTRAL REFRIGERATED AIR-CONDITIONING SYSTEM

PART 1 GENERAL

1.1 REFERENCES

The publications listed below form a part of this specification to the extent referenced. The publications are referred to in the text by basic designation only.

AIR CONDITIONING AND REFRIGERATION INSTITUTE (ARI)

ARI 210/240	(1989) Unitary Air-Conditioning and Air-Source Heat Pump Equipment
ARI 365	(1987) Commercial and Industrial Unitary Air-Conditioning Condensing Units
ARI 460	(1994) Remote Mechanical-Draft Air-Cooled Refrigerant Condensers
ARI 550	(1992) Centrifugal or Rotary Screw Water-Chilling Packages
ARI 590	(1992) Reciprocating Water-Chilling Packages
ARI 700	(1993) Specifications for Fluorocarbon and Other Refrigerants
ARI 710	(1986) Liquid-Line Driers
ARI 720	(1988) Refrigerant Access Valves and Hose Connectors
ARI 750	(1994) Thermostatic Refrigerant Expansion Valves
ARI 760	(1987) Solenoid Valves for Use with Volatile Refrigerants

AMERICAN BEARING MANUFACTURERS ASSOCIATION (ABEMA)

ABEMA 9	(1990) Load Ratings and Fatigue Life for Ball Bearings
ABEMA 11	(1990) Load Ratings and Fatigue Life for Roller Bearings

AMERICAN SOCIETY FOR TESTING AND MATERIALS (ASTM)

ASTM A 47	(1990) Ferritic Malleable Iron Castings
ASTM A 53	(1993a) Pipe, Steel, Black and Hot-Dipped, Zinc-Coated Welded and Seamless
ASTM A 106	(1994) Seamless Carbon Steel Pipe for High-Temperature Service
ASTM A 181	(1994) Forgings, Carbon Steel, for General-Purpose Piping
ASTM A 183	(1983; R 1990) Carbon Steel Track Bolts and Nuts

ASTM A 193	(1996) Alloy-Steel and Stainless Steel Bolting Materials for High-Temperature Service
ASTM A 234	(1996) Piping Fittings of Wrought Carbon Steel and Alloy Steel for Moderate and Elevated Temperatures
ASTM A 307	(1994) Carbon Steel Bolts and Studs, 60,000 PSI Tensile Strength
ASTM A 334	(1991) Seamless and Welded Carbon and Alloy-Steel Tubes for Low-Temperature Service
ASTM A 536	(1984; R 1993) Ductile Iron Castings
ASTM A 733	(1993) Welded and Seamless Carbon Steel and Austenitic Stainless Steel Pipe Nipples
ASTM B 32	(1995) Solder Metal
ASTM B 62	(1993) Composition Bronze or Ounce Metal Castings
ASTM B 75	(1993) Seamless Copper Tube
ASTM B 88	(1993a) Seamless Copper Water Tube
ASTM B 117	(1994) Operating Salt Spray (Fog) Testing Apparatus
ASTM B 209	(1995) Aluminum and Aluminum-Alloy Sheet and Plate
ASTM B 210	(1995) Aluminum and Aluminum-Alloy Drawn Seamless Tubes
ASTM B 280	(1993a) Seamless Copper Tube for Air Conditioning and Refrigeration Field Service
ASTM C 534	(1994) Preformed Flexible Elastomeric Cellular Thermal Insulation in Sheet and Tubular Form
ASTM D 520	(1984; R 1989) Zinc Dust Pigment
ASTM D 1384	(1993) Corrosion Test for Engine Coolants in Glassware
ASTM D 2000	(1990; R 1994) Rubber Products in Automotive Applications
ASTM D 3308	(1991a) PTFE Resin Skived Tape
ASTM F 104	(1993) Nonmetallic Gasket Materials
ASTM F 1199	(1988; R 1993) Cast (All Temperature and Pressures) and Welded Pipe Line Strainers (150 psig and 150 degrees F Maximum)

AMERICAN SOCIETY OF HEATING, REFRIGERATING AND AIR-CONDITIONING ENGINEERS (ASHRAE)

ASHRAE 15	(1994) Safety Code for Mechanical Refrigeration

AMERICAN SOCIETY OF MECHANICAL ENGINEERS (ASME)

ASME B1.20.1	(1983; R 1992) Pipe Threads, General Purpose (Inch)
ASME B16.5	(1988; Errata Oct 88; B16.5a) Pipe Flanges and Flanged Fittings
ASME B16.9	(1993) Factory-Made Wrought Steel Buttwelding Fittings
ASME B16.11	(1991) Forged Fittings, Socket-Welding and Threaded
ASME B16.18	(1984; R 1994) Cast Copper Alloy Solder Joint Pressure Fittings
ASME B16.21	(1992) Nonmetallic Flat Gaskets for Pipe Flanges
ASME B16.22	(1989) Wrought Copper and Copper Alloy Solder Joint Pressure Fittings
ASME B16.26	(1988) Cast Copper Alloy Fittings for Flared Copper Tubes
ASME B16.39	(1986; R 1994) Malleable Iron Threaded Pipe Unions Classes 150, 250, and 300
ASME B31.1	(1995) Power Piping
ASME B31.5	(1992; B31.5a) Refrigeration Piping
ASME B40.1	(1991) Gauges - Pressure Indicating Dial Type - Elastic Element
ASME BPV VIII Div 1	(1995) Boiler and Pressure Vessel Code; Section VIII, Pressure Vessels Division 1 - Basic Coverage
ASME BPV IX	(1995) Boiler and Pressure Vessel Code; Section IX, Welding and Brazing Qualifications

AMERICAN WATER WORKS ASSOCIATION (AWWA)

AWWA C606	(1987) Grooved and Shouldered Joints

AMERICAN WELDING SOCIETY (AWS)

AWS A5.8	(1992) Filler Metals for Brazing and Braze Welding
AWS D1.1	(1994) Structural Welding Code - Steel

HYDRAULIC INSTITUTE (HI)

HI-01	(1983) Standards for Centrifugal, Rotary, & Reciprocating Pumps

MANUFACTURERS STANDARDIZATION SOCIETY OF THE VALVE AND FITTINGS INDUSTRY (MSS)

MSS SP-25	(1993) Standard Marking System for Valves, Fittings, Flanges and Unions
MSS SP-58	(1993) Pipe Hangers and Supports - Materials, Design and Manufacture
MSS SP-67	(1995) Butterfly Valves
MSS SP-69	(1991) Pipe Hangers and Supports - Selection and Application
MSS SP-70	(1990) Cast Iron Gate Valves, Flanged and Threaded Ends
MSS SP-71	(1990) Cast Iron Swing Check Valves, Flanges and Threaded Ends
MSS SP-72	(1992) Ball Valves with Flanged or Butt-welding Ends for General Service
MSS SP-78	(1987; R 1992) Cast Iron Plug Valves, Flanged and Threaded Ends
MSS SP-80	(1987) Bronze Gate, Globe, Angle and Check Valves
MSS SP-85	(1994) Cast Iron Globe & Angle Valves, Flanged and Threaded Ends
MSS SP-110	(1996) Ball Valves Threaded, Socket-Welding, Solder Joint, Grooved and Flared Ends

NATIONAL ELECTRICAL MANUFACTURERS ASSOCIATION (NEMA)

NEMA 250	(1991) Enclosures for Electrical Equipment (1000 Volts Maximum)
NEMA MG 1	(1993; Rev 1-1993; Rev 2-1995) Motors and Generators

NATIONAL FIRE PROTECTION ASSOCIATION (NFPA)

NFPA 70	(1993) National Electrical Code
NFPA 90A	(1993) Installation of Air Conditioning and Ventilating Systems

UNDERWRITERS LABORATORIES (UL)

UL 1995	(1990) Heating and Cooling Equipment

1.2 SYSTEM DESCRIPTION

This specification section covers the provisions and installation procedures necessary for a complete and totally functional refrigerant system. The system shall be provided and installed with all necessary System Components, Accessories, Piping Components, and Supplemental Components Services.

1.3 SUBMITTALS

Government approval is required for submittals with a "GA" designation; submittals having an "FIO" designation are for information only. The following shall be submitted in accordance with Section 01300 SUBMITTAL PROCEDURES:

SD-01 Data

Central Refrigerated Air-Conditioning System; FIO.

Manufacturer's catalog data, at least 5 weeks prior to beginning construction, shall be highlighted to show model number, size, options, performance charts and curves, etc., in adequate detail to demonstrate compliance with contract requirements. Data shall include manufacturer's recommended installation instructions and procedures. Data shall be adequate to demonstrate compliance with contract requirements as specified within the paragraphs:

a. Refrigeration System

b. System Components

c. Accessories

d. Cooling Tower

e. Piping Components

If vibration isolation is specified for a unit, vibration isolator literature shall be included containing catalog cuts and certification that the isolation characteristics of the isolators provided meet the manufacturer's recommendations.

Water Treatment Systems; FIO.

Six complete copies, at least 5 weeks prior to the purchase of the water treatment system, of the proposed water treatment plan including a layout, control scheme, a list of existing make-up water conditions including the items listed in Paragraph Water Analysis, a list of chemicals, the proportion of chemicals to be added, the final treated water conditions, and a description of environmental concerns for handling the chemicals.

Spare Parts; FIO.

Spare parts data for each different item of material and equipment specified, after approval of the detail drawings and not later than 2 months prior to the date of beneficial occupancy. The data shall include a complete list of parts and supplies, with source of supply.

Qualifications; FIO.

Six copies of qualified procedures, and list of names and identification symbols of qualified welders and welding operators, prior to non-factory welding operations.

SD-04 Drawings

Central Refrigerated Air-Conditioning System; FIO.

Drawings, at least 5 weeks prior to beginning construction, shall provide adequate detail to demonstrate compliance with contract requirements. Drawings shall consist of:

a. Equipment layouts which identify assembly and installation details.

b. Piping layouts which identify all valves and fittings.

c. Plans and elevations which identify clearances required for maintenance and operation.

d. Wiring diagrams which identify each component individually and all interconnected or interlocked relationships between components.

e. Foundation drawings, bolt-setting information, and foundation bolts prior to concrete foundation construction for all equipment indicated or required to have concrete foundations.

f. Details, if piping and equipment are to be supported other than as indicated, which include loadings and type of frames, brackets, stanchions, or other supports.

SD-06 Instructions

Posted Instructions; FIO.

Posted instructions, at least 2 weeks prior to construction completion, shall include equipment layout, wiring and control diagrams, piping, valves and control sequences, and typed condensed operation instructions. The condensed operation instructions shall include preventative maintenance procedures, methods of checking the system for normal and safe operation, and procedures for safely starting and stopping the system. The posted instructions shall be framed under glass or laminated plastic and be posted where indicated by the Contracting Officer.

SD-07 Schedules

Factory Tests; FIO.

Schedules, at least 2 weeks prior to the factory test, which identify the date, time, and location for each test. Schedules shall be submitted for both the Chiller Performance Test and the Chiller Sound Test.

Tests; FIO.

Test schedules, at least 2 weeks prior to the start of related testing, for each of the field tests, the system performance tests, and the condenser water quality tests. The schedules shall identify the date, time, and location for each test.

Demonstrations; FIO.

A schedule, at least 2 weeks prior to the date of the proposed training course, which identifies the date, time, and location for the training.

SD-08 Statements

Verification of Dimensions; FIO.

A letter, at least 2 weeks prior to beginning construction, including the date the site was visited, conformation of existing conditions, and any discrepancies found.

SD-09 Reports

Factory Tests; FIO.

Six copies of the report shall be provided in bound 216 by 279 mm booklets. Reports shall certify the compliance with performance requirements and follow the format of the required testing standard for both the Chiller Performance Tests and the Chiller Sound Tests. Test report shall include certified calibration report of all test instrumentation. Calibration report shall include certification that all test instrumentation has been calibrated within 6 months prior to the test date, identification of all instrumentation, and certification that all instrumentation complies with requirements of the test standard.

Field Tests; FIO.

Six copies of the report shall be provided in bound 216 by 279 mm booklets. Reports shall document all phases of tests performed during the Water Pipe Testing, the Refrigerant Pipe Testing, and the Cooling Tower Tests. The report shall include initial test summaries, all repairs/adjustments made, and the final test results.

System Performance Tests; FIO.

Six copies of the report shall be provided in bound 216 by 279 booklets. The report shall document compliance with the specified performance criteria upon completion and testing of the system. The report shall indicate the number of days covered by the tests and any conclusions as to the adequacy of the system. The report shall also include the following information and shall be taken at least three different times at outside dry-bulb temperatures that are at least 3 degrees C apart:

a. Date and outside weather conditions.

b. The load on the system based on the following:

(1) The refrigerant used in the system.

(2) Condensing temperature and pressure.

(3) Suction temperature and pressure.

(4) Running current, voltage and proper phase sequence for each phase of all motors.

(5) The actual on-site setting of all operating and safety controls.

(6) Chilled water quantity and temperature in and out of the chiller.

(7) The position of the capacity-reduction gear at machine off, onethird loaded, one-half loaded, two-thirds loaded, and fully loaded.

Inspections; FIO.

Test report, at the completion of one year of service, in bound 216 by 279 mm booklets. The report shall identifying the condition of the cooling tower and condenser. The report shall also include a comparison of the condition of the cooling tower and condenser with the manufacturer's recommended operating conditions.

SD-13 Certificates

Central Refrigerated Air-Conditioning System; FIO.

Where the system, components, or equipment are specified to comply with requirements of ARI, ASHRAE, ASME, or UL, proof of such compliance shall be provided. The label or listing of the specified agency shall be acceptable evidence. In lieu of the label or listing, a written certificate from an approved, nationally recognized testing organization equipped to perform such services, stating that the items have been tested and conform to the requirements and testing methods of the specified agency may be submitted. When performance requirements of this project's drawings and specifications vary from standard ARI rating conditions, computer printouts, catalog, or other application data certified by ARI or a nationally recognized laboratory as described above shall be included. If ARI does not have a current certification program that encompasses such application data, the manufacturer may self certify that his application data complies with project performance requirements in accordance with the specified test standards.

SD-19 Operation and Maintenance Manuals

Operation Manual; FIO.

Six complete copies of an operation manual in bound 216 by 279 mm booklets listing step-by-step procedures required for system startup, operation, and shutdown. The booklets shall include the manufacturer's name, model number, and parts list. The manuals shall include the manufacturer's name, model number, service manual, and a brief description of all equipment and their basic operating features.

Maintenance Manual; FIO.

Six complete copies of maintenance manual in bound 216 by 279 mm booklets listing routine maintenance procedures, possible breakdowns and repairs, and a trouble shooting guide. The manuals shall include piping and equipment layouts and simplified wiring and control diagrams of the system as installed.

Water Treatment System; FIO.

Six complete copies of operating and maintenance manuals for the step-by-step water treatment procedures. The manuals shall include testing procedures used in determining water quality.

1.4 QUALIFICATIONS

Piping shall be welded in accordance with the qualified procedures using performance qualified welders and welding operators. Procedures and welders shall be qualified in accordance with ASME BPV IX.

Welding procedures qualified by others, and welders and welding operators qualified by another employer may be accepted as permitted by ASME B31.1. The Contracting Officer shall be notified 24 hours in advance of tests and the tests shall be performed at the work site if practical. The welder or welding operator shall apply his assigned symbol near each weld he makes as a permanent record. Structural members shall be welded in accordance with Section 05055 WELDING, STRUCTURAL.

1.5 SAFETY REQUIREMENTS

Exposed moving parts, parts that produce high operating temperature, parts which may be electrically energized, and parts that may be a hazard to operating personnel shall be insulated, fully enclosed, guarded, or fitted with other types of safety devices. Safety devices shall be installed so that proper operation of equipment is not impaired.

1.6 DELIVERY, STORAGE, AND HANDLING

All equipment delivered and placed in storage shall be stored with protection from the weather, humidity and temperature variations, dirt and dust, or other contaminants.

1.7 PROJECT/SITE CONDITIONS

1.7.1 Verification of Dimensions

The Contractor shall become familiar with all details of the work, verify all dimensions in the field, and shall advise the Contracting Officer of any discrepancy before performing any work.

1.7.2 Drawings

Because of the small scale of the drawings, it is not possible to indicate all offsets, fittings, and accessories that may be required. The Contractor shall carefully investigate the plumbing, fire protection, electrical, structural and finish conditions that would affect the work to be performed and shall arrange such work accordingly, furnishing required offsets, fittings, and accessories to meet such conditions.

PART 2 PRODUCTS

2.1 STANDARD PRODUCTS

Materials and equipment shall be standard products of a manufacturer regularly engaged in the manufacturing of such products, which are of a similar material, design and workmanship. The standard products shall have been in satisfactory commercial or industrial use for 2 years prior to bid opening. The 2-year use shall include applications of equipment and materials under similar circumstances and of similar size. The 2 years experience shall be satisfactorily completed by a product which has been sold or is offered for sale on the commercial market through advertisements, manufacturer's catalogs, or brochures. Products having less than a 2-year field service record shall be acceptable if a certified record of satisfactory field operation, for not less than 6,000 hours exclusive of the manufacturer's factory tests, can be shown. All products shall be supported by a service organization. The Contractor shall submit a certified list of qualified permanent service organizations for support of the equipment which includes their addresses and qualifications. These service organizations shall be reasonably convenient to the equipment installation and shall be able to render satisfactory service to the equipment on a regular and emergency basis during the warranty period of the contract.

2.2 NAMEPLATES

Each major component of equipment shall have the manufacturer's name, address, type or style, and catalog or serial number on a plate securely attached to the item of equipment. Nameplates shall be provided for:

a. Condensing and Compressors Unit(s)

b. Liquid-Chilling Package(s)

c. Receiver(s)

d. Pump(s)

e. Pump Motor(s)

f. Expansion Tanks

g. Air Separator Tanks

2.3 ELECTRICAL WORK

Electrical equipment, motors, motor efficiencies, and wiring shall be in accordance with Section 16415 ELECTRICAL WORK, INTERIOR. Electrical motor driven equipment specified shall be provided complete with motors, motor starters, and controls. Electrical characteristics and enclosure type shall be as shown, and unless otherwise indicated, all motors of 745 W and above with open, dripproof, or totally enclosed fan cooled enclosures, shall be high efficiency type. Field wiring shall be in accordance with manufacturer's instructions. Each motor shall conform to NEMA MG 1 and be of sufficient size to drive the equipment at the specified capacity without exceeding the nameplate rating of the motor. All motors shall be continuous duty with the enclosure specified. Motor starters shall be provided complete with thermal overload protection and other appurtenances necessary for the motor control indicated. Motors shall be furnished with a magnetic across-the-line or reduced voltage type starter as required by the manufacturer. Motor starter shall be provided with NEMA 1 enclosures. Manual or automatic control and protective or signal devices required for the operation specified and any control wiring required for controls and devices specified, but not shown, shall be provided.

2.4 MATERIALS

2.4.1 Gaskets

Gaskets shall conform to ASTM F 104 - classification for compressed sheet with nitrile binder and acrylic fibers for maximum 371 degrees C service.

2.4.2 Bolts and Nuts

Bolts and nuts, except as required for piping applications, shall be in accordance with ASTM A 307. The bolt head shall be marked to identify the manufacturer and the standard with which the bolt complies in accordance with ASTM A 307.

2.4.3 Escutcheons

Escutcheons shall be chromium-plated iron or chromium-plated brass, either one piece or split pattern, held in place by internal spring tension or set screws.

2.4.4 Pipe Hangers, Inserts, and Supports

Pipe hangers, inserts, and supports shall conform to MSS SP-58 and MSS SP-69.

2.4.5 Gauges

Gauges shall conform to ASME B40.1, Class 1, 2, or 3, Style X, Type I or III as required, 115 mm in diameter with phenolic or metal case.

2.5 REFRIGERATION SYSTEM

2.5.1 Condensing and Compressor Unit; Reciprocating, Scroll, or Screw

Each compressor or condensing unit shall be designed, fitted, tested, and rated in accordance with ARI 210/240 or ARI 365. Each unit shall also meet the requirements of ASHRAE 15, UL 1995 and NFPA 70 as applicable. The unit shall include the following components as defined in paragraph SYSTEM COMPONENTS:

a. Refrigerant and Oil

b. Reciprocating, Scroll, or Helical Rotary Screw Compressor

c. Compressor Driver, Electric Motor

d. Compressor Driver Connections

e. Liquid Cooler

f. Integral Air-Cooled Condenser

g. Receivers

h. Tools

i. All customary auxiliaries deemed necessary by the manufacturer for safe, controlled, automatic operation of the equipment

2.5.1.1 Capacity Criteria

Each unit shall produce an Energy Efficiency Ratio (EER) of 9.21 when rated in accordance with ARI 210/240 or ARI 365.

2.5.1.2 Controls Package

Units of 35 kW or more shall be provided with automatic capacity controls actuated by either pressure or temperature to provide automatic capacity reduction. Compressors with capacity reduction devices shall

start with capacity-reduction devices in the unloaded position. Multiple compressor units shall start compressors in sequence. Pressure cutouts and gauges shall be factory or field mounted on a gauge board. The controls package for the unit shall include:

a. Separate high- and low-pressure cutouts.

b. Suction gauges.

c. Discharge gauges.

d. Manual resets for all cutouts.

2.5.1.3 Base

Unit shall be mounted on a structural steel or cast iron base. Compressors shall be mounted on vibration isolators.

2.5.2 Liquid-Chilling Package; Reciprocating Scroll, or Screw

Reciprocating or scroll unit shall be designed, fitted, tested, and rated in accordance with ARI 590 and shall meet all the requirements of ASHRAE 15. Screw units shall be designed, fitted, tested, and rated in accordance with ARI 550 and shall meet all the requirements of ASHRAE 15. Entire unit shall be factory assembled, completely piped and wired except for units with remote condensers. Single packaged units shall be charged with refrigerant and oil ready for operation after connection to utilities. The unit shall include the following components as defined in paragraph SYSTEM COMPONENTS:

a. Refrigerant and Oil

b. Reciprocating or Scroll or Screw Compressor

c. Compressor Driver, Electric Motor

d. Compressor Driver Connections

e. Liquid Cooler

f. Integral Air-Cooled Condenser

g. Receivers

h. Tools

i. All customary auxiliaries deemed necessary by the manufacturer for safe, controlled, automatic operation of the equipment

2.5.2.1 Capacity Criteria

Unit shall have a minimum Coefficient of Performance (COP) of 2.7 at full load rating in accordance with ARI 590. Unit shall have a minimum Integrated Part Load Value (IPLV) of 2.8 in accordance with ARI 590.

2.5.2.2 Controls Package

Each water-chilling unit shall be provided with operating and safety controls of the electric, electronic, pneumatic electric or pneumatic type. The Contractor shall properly coordinate the chiller control system with the temperature-control system specified in Section 15895 AIR SUPPLY, DISTRIBUTION, VENTILATION, AND EXHAUST SYSTEM and 15951 DIRECT DIGITAL CONTROL FOR HVAC. Temperature sensing elements shall be located as recommended by the manufacturer. Capacity reduction may be provided by cylinder unloading, by sequence operation of two or more, but shall not exceed four compressors per circuit, or by a combination of both methods. Each unit shall be provided with a factory-piped and -wired control panel fitted with:

a. A refrigerant discharge pressure and suction pressure gauge

b. A separate high-pressure cut-out with manual reset

c. A low-temperature cutout

d. Omitted

e. Entering and leaving chilled water cutout

f. Omitted

g. Any other relays or appurtenances necessary for safe, controlled chiller operation

h. Manual on-off switch

i. Alarm circuit terminals to actuate a minimum 100 mm diameter alarm bell in the event of machine cutout on any protective device, except when the low-pressure control is used as an operating control. Oil pressure gauge and low oil pressure cutout shall be provided on compressors which utilize positive displacement type oil pumps.

j. System capacity control, pressure or temperature actuated, on systems over 3.5 kW to adjust the unit capacity in accordance with the system load, and to automatically re-cycle the system on power interruption.

2.5.2.3 Base

Unit shall be mounted on a structural steel or cast iron base. Compressors shall be mounted on vibration isolators.

2.5.2.4 Refrigerant Circuit

Each circuit shall include combination filter and drier, combination sight glass and moisture indicator, liquid-line solenoid valve, thermostatic expansion valve with external equalizer, and superheat adjustment.

2.6 SYSTEM COMPONENTS

2.6.1 Refrigerant and Oil

Refrigerants shall be one of the fluorocarbon gases. Refrigerants shall have number designations and safety classifications in accordance with ASHRAE 34. Refrigerants shall meet the requirements of ARI 700 as a minimum. Refrigerants shall have an Ozone Depletion Potential (ODP) of less than or equal to 0.05. The unit shall be factory leak tested and dehydrated. Where factory does not precharge the system, Contractor shall provide and install a complete charge of refrigerant and oil required for the installed system as recommended by the manufacturer.

2.6.2 Compressor(s)

2.6.2.1 Reciprocating Compressor(s)

All rotating parts shall be statically and dynamically balanced at the factory to minimize vibration. Compressors shall be capable of operating at partial load conditions without increased vibration over the normal vibration at full load operation and shall be capable of continuous operation down to the lowest step of unloading as specified. Compressors of size 7.45 kW and above shall have an oil lubrication system of the reversible, forced-feed type with oil strainer. Shaft seal in open-type units shall be mechanical type. Piston speed for open-type compressors shall not exceed the manufacturer's recommendation or 6 m/s (1,200 fpm), whichever is less. Compressors shall include:

a. Vertical, V, W, or radial cylinder design

b. Oil lubrication

c. Integrally cast block of close-grained iron or cast aluminum block with hardened steel cylinder sleeves

d. Oil-level bull's eye

e. Cast cylinder heads

f. Cast-aluminum or forged-steel connecting rods

g. Cast iron or forged-steel crankshaft

h. Main bearings of the sleeve-insert type

i. Crankcase oil heaters controlled as recommended by the manufacturer

j. Suction and discharge refrigerant service valves that are flange connected, wrench operated, with cap

k. A strainer on the suction side of the compressor

2.6.2.2 Scroll Compressor(s)

Compressors shall be of the compliant, hermetically sealed design. Compressors shall be mounted on vibration isolators to minimize vibration and noise. Rotating parts shall be statically and dynamically balanced at the factory to eliminate vibration. Lubrication system shall be centrifugal pump type equipped with an oil level bull's eye sight glass and an oil charging valve. Crankcase oil heater shall be provided if

standard or if available as an option. If provided, the crankcase oil heater shall be controlled as recommended by the manufacturer.

2.6.2.3 Helical Rotary Screw Compressor(s)

Compressors shall operate stably for indefinite time periods at any stage of capacity reduction without hot-gas bypass. Provision shall be made to insure proper lubrication of bearings and shaft seals on shutdown with or without electric power supply. Helical rotary screw compressors shall include:

a. An accessible, hermetic, positive displacement, oil-injected design directly driven by the compressor driver.

b. Rotors which are solid steel forging with sufficient rigidity for proper operation.

c. A maximum rotor operating speed no greater than 3,600 rpm.

d. Casings of cast iron, precision machined for minimal clearance about periphery of rotors.

e. A lubrication system of the forced-feed type that provides oil at the proper pressure to all parts requiring lubrication.

f. Shaft main bearings of the sleeve type with heavy duty bushings or rolling element type in accordance with ABEMA 9 or ABEMA 11. Bearings shall be conservatively loaded and rated for an L(10) life of not less than 200,000 hours.

g. A differential oil pressure or flow cutout to allow the compressor to operate only when the required oil pressure or flow is provided to the bearings.

h. A temperature- or pressure-initiated, hydraulically actuated, single slide-valve, capacity-control system to provide automatic capacity modulation from 100 percent to 15 percent.

i. An external oil separator and oil return system to remove oil entrained in the refrigerant gas and automatically return the oil to the compressor.

j. Crankcase oil heaters controlled as recommended by the manufacturer.

2.6.3 Compressor Driver, Electric Motor

Motor starter shall be unit mounted. The compressor(s) shall be driven by an electric motor that has a maximum speed of 3,600 rpm. Motor shall be of the constant-speed, squirrel-cage induction, open enclosure, or hermetically sealed, normal- or high-torque type as required by the compressor manufacturer to adequately bring the compressor up to full operating speed without damaging the equipment. Motor shall be furnished with magnetic across-the-line or reduced-voltage motor starter as required by the unit manufacturer to limit unit total instantaneous-current flow during start-up. Motor starter shall be provided with NEMA 1 enclosures with an integral circuit breaker which trips the breaker when the starter door is opened. Hermetically sealed motors shall be refrigerant-gas cooled. Wiring shall be as recommended by the compressor manufacturer to provide completely automatic operation of the system. Motors shall be protected against running overload and motor-winding temperature overloads. All compressors shall be protected from rapid on-off cycling by a 20-minute time-delay switch initiated by unit shutdown with an

adjustable time delay. Motor controller shall be suitable for starting compressor motor intermittently at 20-minute intervals continuously without damage to controller.

2.6.4 Omitted

2.6.5 Compressor Driver Connections

Each machine driven through speed-increasing gears shall be so designed as to assure self-alignment, interchangeable parts, proper lubrication, and minimum of unbalanced forces. Bearings shall be of the sleeve or roller type. Pressure lubrication with pump and cooler shall be provided. Gear cases shall be oil tight. Shaft extensions shall be provided with seals to retain oil and exclude all dust.

2.6.6 Liquid Cooler

Liquid coolers shall be designed, fitted, and rated in accordance with ARI 590 for reciprocating and scroll compressors and ARI 550 for rotary screw compressors. Coolers shall be designed, constructed, tested, and certified in accordance with ASME BPV VIII Div 1 as applicable, and shall comply with the provisions of ASHRAE 15. Liquid coolers shall be designed for waterside working pressures not less than 1,000 kPa. On direct-expansion-type units, refrigerant circuit shall be complete with liquid solenoid valve and expansion device capable of modulating to the minimum step of capacity unloading. Liquid coolers shall be of the removable or fixed-tube bundle type except that units less than 77 kW may be coaxial-tube type. Tubes shall be seamless copper, plain, integrally finned with smooth bore or integrally finned with enhanced bore. Nominal tube thickness shall be no less than 0.71 mm. Each tube shall be individually replaceable, excluding the coaxial-tube type. Tubes shall be installed into carbon mild steel tube sheets by rolling. Tube baffles shall be carbon mild steel properly spaced to provide adequate tube support, and cross flow liquid cooler feed control shall be complete and designed to feed the cooler at all levels of capacity from 100 percent down to minimum required operating level. Performance shall be based on a water velocity not less than 0.91 m/s nor more than 3.7 m/s and fouling factor of 0.000044 square meter-degree C/W.

2.6.7 Air-Cooled Condenser and Condensing Section

2.6.7.1 Sizing

Sizing of the condenser for full capacity at design conditions shall be based on the temperature difference between the entering outside air and the condensing refrigerant for systems with stand-alone condensers that are not part of a manufacturer matched combination and cataloged system. Sizing of all other condensers for full capacity at design conditions shall be based on a maximum of 16.7 degrees C temperature difference between the entering outside air and condensing refrigerant.

2.6.7.2 Construction

Air-Cooled condenser shall be designed, fitted, tested, and rated in accordance with ARI 210/240, ARI 365, ARI 460, or ARI 590 as applicable and shall meet the requirements of ASHRAE 15. Condenser shall be an integral part of the liquid-chilling package unit. Air-cooled condenser shall be a complete factory-fabricated and assembled unit, consisting of coils, fans, and electric-motor drive. Unless the condenser coil is completely protected through inherent design, screens shall be provided by the manufacturer to prevent physical damage to the coil.

2.6.7.3 Operation

Saturated refrigerant condensing temperature shall not be over 55 degrees C unless the system can meet the unit efficiency specified on the drawings at the provided condensing temperature, in which case the manufacturer shall certify that the condenser and associated equipment are designed for the submitted condensing temperature. The saturated condensing temperature shall not exceed 63 degrees C in either case. Entering dry bulb outside design air temperature shall be as indicated. For those periods when the refrigeration system will operate over design conditions, the equipment shall be capable of operating continuously at 5.6 degrees C above stated outside design air temperature without damage or shutdown of the compressor motor or shutdown of the refrigeration system by safety devices.

2.6.7.4 Condenser Coil

Condenser coil shall be of the extended-surface fin-and-tube type and shall be constructed of seamless copper or aluminum tubes with compatible copper or aluminum fins. On condensers with all aluminum construction, tubes shall conform to ASTM B 210; alloy 1100, and aluminum alloy conforming to chemical requirements of ASTM B 209, alloy 7072 shall be used for the fins and end sheets. Fins shall be soldered or mechanically bonded to the tubes and installed in a metal casing. Coil shall be tested after assembly at pressure specified in ASHRAE 15 for the refrigerant employed in the system.

2.6.7.5 Fans

Fans shall be centrifugal or propeller type as best suited for the application. Fans shall be direct or V-belt driven. Belt drives shall be completely enclosed within the unit casing or equipped with a guard. When belt drive is provided, an adjustable sheave to furnish not less than 20 percent fan-speed adjustment shall be provided. Sheaves shall be selected to provide the capacity indicated at the approximate midpoint of the adjustment. Fans shall be statically and dynamically balanced.

2.6.7.6 Condenser Casing

Condenser casing shall be aluminum not less than 2 mm or hot-dip galvanized steel not lighter than 1.2 mm. Condensers having horizontal air discharge shall be provided with discharge baffle to direct air upward, constructed of the same material and thickness as the casing.

2.6.7.7 Refrigerant Storage

Air-cooled condenser may be used for refrigerant storage in lieu of a separate receiver, if the condenser storage capacity is 5 percent in excess of the fully charged system for packaged air-cooled chillers and air-cooled condensing units with field installed refrigerant piping no longer than recommended by the manufacturer; 20 percent for all air-cooled condensers; and 20 percent for all air-cooled condensing units with field installed piping which is longer than recommended by the manufacturer.

2.6.7.8 Condenser Controls

If the equipment or system served by the condenser requires control of head pressure either air volume head pressure control or condenser flooding head pressure control shall be provided which meets the following requirements:

a. Air Volume Control: On a decrease in refrigerant discharge pressure, volume-control dampers shall modulate to control the airflow over the condenser coil. Solid-state variable-speed fan motor controller

may be provided in lieu of volume dampers to control the air flow over the coil. Condensers with multiple fans may be provided with fan cycling control to cycle fans in response to outdoor ambient temperature. Control shall be set for minimum of 35 degrees C saturated refrigerant condensing temperature.

b. Condenser Flooding: On a decrease in refrigerant discharge pressure, a head pressure sensitive valve shall throttle condenser outflow to increase the amount of liquid in the condenser. A differential pressure hot-gas bypass valve shall be provided to maintain receiver pressure which opens as the receiver pressure falls. Control shall be set for minimum of 35 degrees C saturated refrigerant condensing temperature.

c. Condenser shall be provided with a low ambient temperature control package which permits the compressor to start and run and the head pressure be maintained at ambient temperatures down to 0 degrees C.

2.6.8 Omitted

2.6.9 Omitted

2.6.10 Omitted

2.6.11 Omitted

2.6.12 Omitted

2.6.13 Tools

One complete set of special tools as recommended by the manufacturer for field maintenance of the system shall be provided. Tools shall be mounted on a tool board in the equipment room or contained in a toolbox as directed by the Contracting Officer.

2.7 ACCESSORIES

2.7.1 Pumps

Pumps shall be the electrically driven, non-overloading, centrifugal type which conform to HI-01. Pump capacity, efficiency, motor size, and impeller type shall be as indicated on the drawings. Pumps shall be selected at or near peak efficiency. Pump curve shall rise continuously from maximum capacity to shutoff. Shutoff head shall be approximately 20 percent greater than design head. Pump motor shall be totally enclosed and have sufficient wattage for the service required. Each pump motor shall be equipped with an across-the-line magnetic controller in a NEMA 250, Type 1 enclosure with "START-STOP" switch in the cover.

2.7.1.1 Construction

Shaft seal shall be mechanical-seal or stuffing-box type. Impeller shall be statically and dynamically balanced. Each pump casing shall be designed to withstand the discharge head specified plus the static head on system plus 50 percent of the total, but not less than 862 kPa. Pump casing and bearing housing shall be close grained cast iron. High points in the casing shall be provided with manual air vents; low points shall be provided with drain plugs. Impeller, impeller wearing rings, glands, casing wear rings, and shaft sleeve shall be bronze. Shaft shall be carbon or alloy steel, turned and ground. Bearings shall be

ball-bearings, roller-bearings, or oil-lubricated bronzesleeve type bearings, and be efficiently sealed or isolated to prevent loss of oil or entrance of dirt or water. Pump and motor shall be mounted on a common cast iron base having lipped edges and tapped drainage openings or structural steel base with lipped edges or drain pan and tapped drainage openings. Close coupled pumps shall be provided with drip pockets and tapped openings. Pump motor shall have the required capacity to prevent overloading with pump operating at any point on its characteristic curve. Pump speed shall not exceed 3,600 rpm, except where the pump head is less than 180 kPa the pump speed shall not exceed 1,750 rpm. Pump shall be accessible for servicing without disturbing piping connections.

2.7.1.2 Mechanical Shaft Seals

Seals shall be single, inside mounted, end-face-elastomer bellows type with stainless steel spring, brass or stainless steel seal head, carbon rotating face, and tungsten carbide sealing face. Glands shall be bronze and of the water-flush design to provide lubrication flush across the face of the seal. Bypass line from pump discharge to flush connection in gland shall be provided, with filter or cyclone separator in line.

2.7.1.3 Stuffing-Box Type Seals

Seals shall be single unit construction separate from the casing, secured against rotation. Stuffing box shall include minimum five rows of square, graphite braided asbestos packing and a bronze split-lantern ring. Packing gland shall be bronze interlocking split type.

2.7.2 Expansion Tanks

Expansion tanks shall be welded steel, constructed, tested and stamped in accordance with ASME BPV VIII Div 1 for a working pressure of 862 kPa and precharged to the minimum operating pressure. Expansion tanks shall have a replaceable diaphragm and be the captive air type. Tanks shall accommodate expanded water of the system generated within the normal operating temperature range, limiting this pressure increase at all components in the system to the maximum allowable pressure at those components. Each tank air chamber shall be fitted with an air charging valve. Tanks shall be supported by steel legs or bases for vertical installation or steel saddles for horizontal installations. The only air in the system shall be the permanent sealed-in air cushion contained within the expansion tank.

2.7.3 Air Separator Tanks

External air separation tank shall be steel, constructed, tested, and stamped in accordance with ASME BPV VIII Div 1 for a working pressure of 862 kPa.

2.7.4 Refrigerant Leak Detector

A refrigerant leak detector shall be provided in any mechanical room or enclosed area which houses a chiller utilizing R-22. The detector shall be located where refrigerant is likely to concentrate. The detector shall be a Halogen-Specific detector which shall be specifically designed for area monitoring. The detector shall have an adjustable sensitivity such that it can detect refrigerant at or above 3 ppm. The detector shall energize the local mechanical ventilation system and initiate an audible and visible alarm upon detecting a refrigerant level greater than 10 ppm.

2.7.5 Signs

Metal signs shall be provided having letters not less than 12 mm in height designating the main shut-off valves to each refrigerant vessel, the electrical control of the chiller, and the pressure limiting device.

2.7.6 Omitted

2.7.7 Insulation

2.7.7.1 Field Installed Insulation

Field installed insulation shall be as specified in Section 15080 THERMAL INSULATION FOR MECHANICAL SYSTEM, except for header and waterbox insulation which shall be flexible cellular insulation in accordance with ASTM C 534, Type I.

2.7.7.2 Factory Installed Insulation

For Liquid-Chilling Packages, insulation shall be provided on all suction piping from the evaporator to the compressor and on the liquid cooler including chilled water boxes or headers.

2.8 OMITTED

2.9 WATER TREATMENT SYSTEMS

When water treatment is specified, the use of chemical-treatment products containing hexavalent chromium (Cr) is prohibited.

2.9.1 Omitted

2.9.2 Chilled and Condenser Water

Water to be used in the chilled and condenser water systems shall be treated to maintain the conditions recommended by this specification as well as the recommendations from the manufacturers of the condenser and evaporator coils. Chemicals shall meet all required federal, state, and local environmental regulations for the treatment of evaporator coils and direct discharge to the sanitary sewer.

2.9.3 Glycol Solution

A 50 percent concentration by volume of industrial grade ethylene glycol shall be provided for the system. The glycol shall be tested in accordance with ASTM D 1384 with less than 0.013 mm penetration per year for all system metals. The glycol shall contain corrosion inhibitors. Silicate based inhibitors shall not be used. The solution shall be compatible with pump seals, other elements of the system, and water treatment chemicals used within the system.

2.9.4 Omitted

2.9.5 Chilled Water System

A shot feeder shall be provided on the chilled water piping as indicated. Size and capacity of feeder shall be based on local requirements and water analysis. The feeder shall be furnished with an air vent, gauge glass, funnel, valves, fittings, and piping.

2.10 PIPING COMPONENTS

2.10.1 Water Piping and Fittings

2.10.1.1 Steel Pipe

Steel pipe shall conform to ASTM A 53, Schedule 40, Type E or S, Grades A or B. Type F pipe shall not be used.

2.10.1.2 Steel Pipe Joints and Fittings

Joints and fittings shall be welded, flanged, threaded, or grooved as indicated. If not otherwise indicated, piping 25 mm nominal and smaller shall be threaded; piping larger than 25 mm nominal and smaller than 80 mm nominal shall be either threaded, grooved, or welded; and piping 80 mm nominal and larger shall be grooved, welded, or flanged. Rigid grooved mechanical joints and fittings may only be used in serviceable aboveground locations where the temperature of the circulating medium does not exceed 110 degrees C. Flexible grooved joints shall be used only as a flexible connector with grooved pipe system. Unless otherwise specified, grooved piping components shall meet the corresponding criteria specified for the similar welded, flanged, or threaded component specified herein. The manufacturer of each fitting shall be permanently identified on the body of the fitting in accordance with MSS SP-25.

a. Welded Joints and Fittings: Welded fittings shall conform to ASTM A 234, and identified with the appropriate grade and marking symbol. Buttwelding fittings shall conform to ASME B16.9. Socket-welding and threaded fittings shall conform to ASME B16.11.

b. Flanged Joints and Fittings: Flanges shall conform to ASTM A 181 and ASME B16.5 Class 150. Gaskets shall be nonasbestos compressed material in accordance with ASME B16.21, 1.59 mm thickness, full face or self-centering flat ring type. This gaskets shall contain aramid fibers bonded with styrene butadeine rubber (SBR) or nitrile butadeine rubber (NBR). Bolts, nuts, and bolt patterns shall conform to ASME B16.5. Bolts shall be high or intermediate strength material conforming to ASTM A 193.

c. Threaded Joints and Fittings: Threads shall conform to ASME B1.20.1. Pipe nipples shall conform to ASTM A 733, type and material to match adjacent piping. Unions shall conform to ASME B16.39, type as required to match adjacent piping.

d. Dielectric Unions and Flanges: Dielectric unions shall have the tensile strength and dimensional requirements specified. Unions shall have metal connections on both ends threaded to match adjacent piping. Metal parts of dielectric unions shall be separated with a nylon insulator to prevent current flow between dissimilar metals. Unions shall be suitable for the required operating pressures and temperatures. Dielectric flanges shall provide the same pressure ratings as standard flanges and provide complete electrical isolation.

e. Grooved Mechanical Joints and Fittings: Joints and fittings shall be designed for not less than 862 kPa service and shall be the product of the same manufacturer. Fitting and coupling houses shall be malleable iron conforming to ASTM A 47, Grade 32510; ductile iron conforming to ASTM A 536, Grade 65-45-12; or steel conforming ASTM A 106, Grade B or ASTM A 53. Gaskets shall be molded synthetic rubber with central cavity, pressure responsive configuration and shall conform to ASTM D 2000 Grade No. 2CA615A15B44F17Z for circulating medium up to 110 degrees C or Grade No. M3BA610A15B44Z for circulating medium up to 93 degrees C. Grooved joints shall conform to AWWA C606. Coupling nuts and bolts shall be steel and shall conform to ASTM A 183.

2.10.1.3 Copper Tube

Copper tubing for water service shall conform to ASTM B 88, Type K or L.

2.10.1.4 Copper Tube Joints and Fittings

Wrought copper and bronze solder-joint pressure fittings shall conform to ASME B16.22 and ASTM B 75. Cast copper alloy solder-joint pressure fittings shall conform to ASME B16.18. Cast copper alloy fittings for flared copper tube shall conform to ASME B16.26 and ASTM B 62. Brass or bronze adapters for brazed tubing may be used for connecting tubing to flanges and to threaded ends of valves and equipment. Extracted brazed tee joints produced with an acceptable tool and installed as recommended by the manufacturer may be used.

2.10.2 Water Piping Valves and Accessories

Valves shall be rated for Class 125 and shall be suitable for operating temperature of 120 degrees C. Valves shall be suitable for the working pressure of the pipe in which installed. Valves shall meet the material, fabrication and operating requirements of ASME B31.1. Chain operators shall be provided for valves located 3 m or higher above the floor. Valves in sizes larger than 25 mm nominal and used on steel pipe systems, may be provided with rigid grooved mechanical joint ends. Such grooved end valves shall be subject to the same requirements as rigid grooved mechanical joints and fittings and, shall be provided by the same manufacturer as the grooved pipe joint and fitting system.

2.10.2.1 Gate Valves

Gate valves 65 mm nominal and smaller shall conform to MSS SP-80 and shall be bronze with rising stem and threaded, soldered, or flanged ends. Gate valves 80 mm nominal and larger shall conform to MSS SP-70, Type I, II, Class 125, Design of and shall be cast iron with bronze trim, outside screw and yoke, and flanged or threaded ends.

2.10.2.2 Globe and Angle Valves

Globe and angle valves 65 mm nominal and smaller shall conform to MSS SP-80 and shall be bronze with threaded, soldered, or flanged ends. Globe and angle valves 80 mm nominal and larger shall conform to MSS SP-85 and shall be cast iron with bronze trim and flanged or threaded ends.

2.10.2.3 Check Valves

Check valves 65 mm nominal and smaller shall conform to MSS SP-80 and shall be bronze with threaded, soldered, or flanged ends. Check valves 80 mm nominal and larger shall conform to MSS SP-71, Type I, II, III, or IV, Class 125 or 150 and shall be cast iron with bronze trim and flanged or threaded ends.

2.10.2.4 Butterfly Valves

Butterfly valves shall be in accordance with MSS SP-67, Type 1, shall be 2 flange, and shall be bubble tight at 1,000 kPa. Valve bodies shall be cast iron, malleable iron, or steel. Valves smaller than 200 mm nominal shall have throttling handles with a minimum of seven locking positions. Valves 200 mm nominal and larger shall have totally enclosed manual gear operators with adjustable balance return stops and

position indicators. Valves in insulated lines shall have extended neck to accommodate insulation thickness.

2.10.2.5 Plug Valves

Plug valves 50 mm nominal and larger shall conform to MSS SP-78, have flanged or threaded ends, and have cast iron bodies with bronze trim. Valves 50 mm nominal and smaller shall be bronze with NPT connections for black steel pipe and brazed connections for copper tubing. Valves shall be lubricated, non-lubricated, or tetrafluoroethylene resin-coated type. Valves shall be resilient, double seated, trunnion mounted with tapered lift plug capable of two-way shutoff. Valves shall operate from fully open to fully closed by rotation of the handwheel to lift and turn the plug. Valves shall a weatherproof operators with mechanical position indicators. Valves 200 mm nominal or larger shall be provided with manual gear operators with position indicators.

2.10.2.6 Ball Valves

Ball valves 15 mm nominal and larger shall conform to MSS SP-72 or MSS SP-110 and shall be ductile iron or bronze with threaded, soldered, or flanged ends. Valves 200 mm nominal or larger shall be provided with manual gear operators with position indicators.

2.10.2.7 Calibrated Balancing Valves

Each valve shall be calibrated so that flow can be determined when the temperature and pressure differential across valve is known. Valves shall have an integral pointer which registers the degree of valve opening. Each valve shall be constructed with internal seals to prevent leakage and shall be supplied with preformed insulation. Valves Cv rating shall be as indicated. Valve bodies shall be provided with tapped openings and pipe extensions with positive shutoff valves outside of pipe insulation. The pipe extensions shall be provided with quick connecting hose fittings for a portable meter to measure the pressure differential. One portable differential meter, suitable for the operating pressure specified, shall be provided. The meter shall be complete with hoses, vent, integral metering connections, and carrying case as recommended by the valve manufacturer. In lieu of the balancing valve with integral metering connections, a ball valve or plug valve with a separately installed orifice plate or venturi tube may be used for balancing.

2.10.2.8 Automatic Flow Control Valves

The valves shall be designed to be sensitive to pressure differential across the valve to provide the required opening. The valves shall be selected for the flow required and provided with a permanent nameplate or tag carrying a record of the factory-determined flow rate and flow control pressure levels. Valves shall control the flow within 5 percent of the tag rating. Valves shall be suitable for the maximum operating pressure of 862 kPa (125 psi) 125 psi or 150 percent of the system operating pressure, whichever is greater. Valves shall be suitable for the maximum system operating temperature and pressure. Valve materials shall be same as specified for low temperature heating system check, globe, angle and gate valves. Valve operator shall be the electric motor type or pneumatic type as applicable. Valve operator shall be capable of positive shutoff against the system pump head.

2.10.2.9 Air Vents

Manual air vents shall be brass or bronze valves or cocks suitable for 862 kpa service, and furnished with threaded plugs or caps. Automatic air vents shall be float type, cast iron, stainless steel, or forged steel construction, suitable for 862 kpa service.

2.10.2.10 Strainers

Strainers shall be in accordance with ASTM F 1199, except as modified herein. Strainer shall be the cleanable, basket or "Y" type, the same size as the pipeline. The strainer bodies shall be fabricated of cast iron with bottoms drilled, and tapped. The bodies shall have arrows clearly cast on the sides indicating the direction of flow. Each strainer shall be equipped with removable cover and sediment screen. The screen shall be made of minimum 0.8 mm (22 gauge) brass sheet, with small perforations numbering not less than 60 per square centimeter to provide a net free area through the basket of at least 3.30 times that of the entering pipe. The flow shall be into the screen and out through the perforations.

2.10.2.11 Combination Strainer and Suction Diffuser

A combination strainer and suction diffuser, consisting of an angle type body with removable strainer basket and straightening vanes, a suction pipe support, and a blowdown outlet, shall be provided on pump suction. The combination strainer and suction diffuser shall be in accordance with ASTM F 1199, except as modified herein.

2.10.2.12 Pump Discharge Valves

Pump discharge valves shall be installed where indicated and shall perform the functions of a nonslam check valve, a manual balancing valve, and a shutoff. Valves shall be of cast iron or ductile iron construction with bronze and/or stainless steel accessories. Valves shall have an integral pointer which registers the degree of valve opening. Flow through the valve shall be manually adjustable from bubble tight shutoff to full flow. Valves smaller than 50 mm nominal shall have NPT connections. Valves 50 mm nominal and larger shall have flanged or grooved end connections. The valve design shall allow the back seat for the stem to be replaced in the field under full line pressure. Valve Cv rating shall be as indicated.

2.10.2.13 Backflow Preventers

Backflow preventers shall be in accordance with Section 15400 PLUMBING, GENERAL PURPOSE.

2.10.2.14 Flexible Pipe Connectors

Flexible pipe connectors shall be designed for 862 kpa or 1034 kPa service as appropriate for the static head plus the system head, and 110 degrees C, for grooved end flexible connectors. The flexible section shall be constructed of rubber, tetrafluoroethylene resin, or corrosion-resisting steel, bronze, monel, or galvanized steel. The flexible section shall be suitable for intended service with end connections to match adjacent piping. Flanged assemblies shall be equipped with limit bolts to restrict maximum travel to the manufacturer's standard limits. Unless otherwise indicated, the length of the flexible connectors shall be as recommended by the manufacturer for the service intended. Internal sleeves or liners, compatible with circulating medium, shall be provided when recommended by the manufacturer. Covers to protect the bellows shall be provided where indicated.

2.10.2.15 Pressure Gauges

Gauges shall conform to ASME B40.1 and shall be provided with throttling type needle valve or a pulsation dampener and shut-off valve. Gauge shall be a minimum of 85 mm in diameter with a range from 0 kPa to approximately 1.5 times the maximum system working pressure.

2.10.2.16 Thermometers

Thermometers shall have brass, malleable iron, or aluminum alloy case and frame, clear protective face, permanently stabilized glass tube with indicating-fluid column, white face, black numbers, and a 225 mm scale. Thermometers shall have rigid stems with straight, angular, or inclined pattern.

2.10.2.17 Pipe Nipples

Pipe nipples shall be in accordance with ASTM A 733 and be of material to match adjacent piping.

2.10.2.18 Pipe Unions

Pipe unions shall be in accordance with ASME B16.39 and be of material to match adjacent piping.

2.10.2.19 Solder

Solder for water piping shall be in accordance with ASTM B 32, alloy grade 50B.

2.10.3 Omitted

2.10.4 Refrigerant Piping and Fittings

Refrigerant piping, valves, fittings, and accessories shall conform to the requirements of ASHRAE 15 and ASME B31.5, except as specified.

2.10.4.1 Steel Pipe

Steel pipe for refrigerant service shall conform to ASTM A 53, Schedule 40, Type E or S, Grades A or B. Type F pipe shall not be used.

2.10.4.2 Steel Pipe Joints and Fittings

Joints and fittings shall be steel butt-welding, socket-welding, or malleable iron threaded type. Pipe shall be welded except that joints on lines 50 mm nominal and smaller may be threaded. Threads shall be tapered type conforming to ASME B1.20.1. The malleable iron threaded type fitting shall be of a weight corresponding to adjacent pipe. Flanges and flange faces of fittings shall be tongue-and-groove type with gaskets suitable for the refrigerant used; size 25 mm nominal and smaller shall be oval, two-bolt type; size above 25 mm nominal, up to and including 100 mm nominal, shall be square four-bolt type; and sizes over 100 mm nominal shall be round.

2.10.4.3 Steel Tubing

Steel tubing for refrigeration service shall be in accordance with ASTM A 334, Grade 1. Tubing with a nominal diameter of 10 mm or 15 mm shall have a wall thickness of 1.24 mm. Tubing with a nominal diameter of 20 mm through 50 mm shall have a wall thickness of 1.65 mm. Tubing with a nominal diameter of 65 mm through 100 mm shall have a wall thickness of 2.41 mm. Steel tubing shall be

cold-rolled, electric-forged, welded-steel. One end of the tubing shall be provided with a socket. Steel tubing shall be cleaned, dehydrated, and capped.

2.10.4.4 Steel Tubing Joints and Fittings

Joints and fittings shall be socket type provided by the steel tubing manufacturer.

2.10.4.5 Copper Tubing

Copper tubing shall conform to ASTM B 280 annealed or hard drawn as required. Copper tubing shall be soft annealed where bending is required and hard drawn where no bending is required. Soft annealed copper tubing shall not be used in sizes larger than 35 mm. Joints shall be brazed except that joints on lines 22 mm and smaller may be flared.

2.10.4.6 Copper Tube Joints and Fittings

Copper tube joints and fittings shall be flare joint type with short-shank flare, or solder-joint pressure type. Joints and fittings for brazed joint shall be wrought-copper or forged-brass sweat fittings. Cast sweat-type joints and fittings shall not be allowed for brazed joints.

2.10.5 Refrigerant Piping, Valves, and Accessories

Valves shall be pressure and temperature rates for contained refrigerant service and shall comply with ASME B31.5. Metals of constructions shall be ferrous or copper based. Atmosphere exposed valve stems shall be stainless steel or corrosion resistant metal plated carbon steel. Valve body connections shall not be used, except in pilot pressure or gauge lines where maintenance disassembly is required and welded flanges cannot be used. Valves shall be suitable for or fitted with extended copper ends for brazing in-place without disassembly. Ferrous body valves shall be fitted with factory fabricated and brazed copper transitions. To minimize system pressure drops, where practicable, globe valves shall be angle body type, and straight line valves shall be full port ball type. Control valve inlets shall be fitted with integral or adapted strainer or filter where recommended or required by the manufacturer. Valves shall be cleaned and sealed moisture-tight.

2.10.5.1 Refrigerant-Stop Valves

Valves, in sizes through 15 mm, shall be handwheel operated, straight or angle, packless diaphragm globe type with back-seating stem, brazed ends, except where SAE flare or retained seal cap connections are required. In sizes over 15 mm, valves shall be globe or angle type, wrench operated with ground-finish stems, or ball valves, packed especially for refrigerant service, back seated, and provided with seal caps. Refrigerant isolation and shut-off valves shall have retained or captive spindles and facilities for tightening or replacement of the gland packing under line pressure as applicable. Stop valves hall have back-seating plated steel stem, bolted bonnet in sizes 25 mm OD and larger, integral or flanged transition brazed socket. Valves in sizes through 65 mm shall be end-entry body assembly, full-port, floating ball type, with equalizing orifice fitted chrome plated ball, seats and seals of tetrafluoroethylene, chrome plated or stainless steel stem, and seal cap. In sizes 100 mm IPS and larger, and in smaller sizes where carbon steel piping is used, valve bodies shall be tongue and groove flanged and complete with mating flange, gaskets and bolting for socket or butt-welded connection. Purge, charge and receiver valves shall be of manufacturer's standard configuration.

2.10.5.2 Check Valves

Valve shall be designed for service application, spring-loaded type where required, with resilient seat and with flanged body in sizes 15 mm.

2.10.5.3 Liquid Solenoid Valves

Valves shall comply with ARI 760 and be suitable for continuous duty with applied voltages 15 percent under and 5 percent over nominal rated voltage at maximum and minimum encountered pressure and temperature service conditions. Valves shall be direct-acting or pilot-operating type, packless, except that packed stem, seal capped, manual lifting provisions shall be furnished. Solenoid coils shall be moisture-proof, UL approved, totally encapsulated or encapsulated and metal jacketed as required. Valves shall have safe working pressure of 2760 kPa and a maximum operating pressure differential of at least 1375 kPa at 85 percent rated voltage. Valves shall have an operating pressure differential suitable for the refrigerant used.

2.10.5.4 Expansion Valves

Expansion valves shall conform to requirements of ARI 750. Valve shall be of the diaphragm and spring type with internal or external equalizers, and bulb and capillary tubing. Valve shall be provided with an external superheat adjustment along with a seal cap. Internal equalizers may be utilized where flowing refrigerant pressure drop between outlet of the valve and inlet to the evaporator coil is negligible and pressure drop across the evaporator is less than the pressure difference corresponding to 1 degrees C of saturated suction temperature at evaporator conditions. Bulb charge shall be determined by the manufacturer for the application and such that liquid will remain in the bulb at all operating conditions. Gas limited liquid charged valves and other valve devices for limiting evaporator pressure shall not be used without a distributor or discharge tube or effective means to prevent loss of control when bulb becomes warmer than valve body. Pilot-operated valves shall have a characterized plug to provide required modulating control. A de-energized solenoid valve may be used in the pilot line to close the main valve in lieu of a solenoid valve in the main liquid line. An isolatable pressure gauge shall be provided in the pilot line, at the main valve. Automatic pressure reducing or constant pressure regulating expansion valves may be used only where indicted or for constant evaporator loads.

2.10.5.5 Safety Relief Valves

Valve shall be two-way type. Single type valves shall be used only where indicated. Valve shall bear the ASME code symbol. Valve capacity shall be certified by the National Board of Boiler and Pressure Vessel Inspectors. Valve shall be of an automatically reseating design after activation.

2.10.5.6 Evaporator Pressure Regulators, Direct-Acting

Valve shall include a diaphragm/spring assembly, external pressure adjustment with seal cap, and pressure gauge port. Valve shall maintain a constant inlet pressure by balancing inlet pressure on diaphragm against an adjustable spring load. Pressure drop at system design load shall not exceed the pressure difference corresponding to a 1 degrees C change in saturated refrigerant temperature at evaporator operating suction temperature. Spring shall be selected for indicated maximum allowable suction pressure range.

2.10.5.7 Refrigerant Access Valves

Refrigerant access valves and hose connections shall be in accordance with ARI 720.

2.10.5.8 Filter Driers

Driers shall conform to ARI 710. Sizes 15 mm and larger shall be the full flow, replaceable core type. Sizes 15 mm and smaller shall be the sealed type. Cores shall be of suitable desiccant that will not plug, cake, dust, channel, or break down, and shall remove water, acid, and foreign material from the refrigerant. Filter driers shall be constructed so that none of the desiccant will pass into the refrigerant lines. Minimum bursting pressure shall be 10.3 MPa.

2.10.5.9 Sight Glass and Liquid Level Indicator

a. Assembly and Components: Assembly shall be pressure- and temperaturerated and constructed of materials suitable for the service. Glass shall be borosilicate type. Ferrous components subject to condensation shall be electro-galvanized.

b. Omitted

c. Bull's-Eye and Inline Sight Glass Reflex Lens: Bull's-eye and inline sight glass reflex lens shall be provided for dead-end liquid service. For pipe line mounting, two plain lenses in one body suitable for backlighted viewing shall be provided.

2.10.5.10 Vibration Dampeners

Dampeners shall be of the all-metallic bellows and woven-wire type.

2.10.5.11 Flexible Pipe Connectors

Connector shall be pressure and temperature rated for the service in accordance with ASHRAE 15 and ASME B31.5. Connector shall be a composite of interior corrugated phosphor bronze or Type 300 Series stainless steel, as required for fluid service, with exterior reinforcement of bronze, stainless steel or monel wire braid. Assembly shall be constructed with a safety factor of not less than 4 at 150 degrees C. Unless otherwise indicated, the length of a flexible connector shall be as recommended by the manufacturer for the service intended.

2.10.5.12 Strainers

Strainers used in refrigerant service shall have brass or cast iron body, Y-or angle-pattern, cleanable, not less than 60-mesh noncorroding screen of an area to provide net free area not less than ten times the pipe diameter with pressure rating compatible with the refrigerant service. Screens shall be stainless steel or monel and reinforced spring-loaded where necessary for bypassproof construction.

2.10.5.13 Brazing Materials

Brazing materials for refrigerant piping shall be in accordance with AWS A5.8, Classification BCuP-5.

2.11 FABRICATION

2.11.1 Factory Coating

Unless otherwise specified, equipment and component items, when fabricated from ferrous metal, shall be factory finished with the manufacturer's standard finish, except that items located outside of buildings shall have weather resistant finishes that will withstand 500 hours exposure to the salt spray test specified in ASTM B 117 using a 5 percent sodium chloride solution. Immediately after completion of the test, the specimen shall show no signs of blistering, wrinkling, cracking, or loss of adhesion and no sign of rust creepage beyond 3 mm on either side of the scratch mark. Cut edges of galvanized surfaces where hot-dip galvanized sheet steel is used shall be coated with a zinc-rich coating conforming to ASTM D 520, Type I.

2.11.2 Field Painting

Painting required for surfaces not otherwise specified, and finish painting of items only primed at the factory are specified in Section 09900 PAINTING, GENERAL.

2.11.2.1 Color Coding

Color coding for piping identification is specified in Section 09900 PAINTING, GENERAL.

2.11.2.2 Color Coding Scheme

A color coding scheme for locating hidden piping shall be in accordance with Section 15400 PLUMBING, GENERAL PURPOSE.

2.12 OMITTED

2.13 SUPPLEMENTAL COMPONENTS SERVICES

2.13.1 Drain and Makeup Water Piping

Piping shall comply with the requirements of Section 15400 PLUMBING, GENERAL PURPOSE. Drains which connect to sanitary sewer system shall be connected by means of an indirect waste.

PART 3 EXECUTION

3.1 INSTALLATION

All work shall be performed in accordance with the manufacturer's published diagrams, recommendations, and equipment warranty requirements. Where equipment is specified to conform to the requirements of ASME BPV VIII Div 1 and ASME BPV IX, the design, fabrication, and installation of the system shall conform to ASME BPV VIII Div 1 and ASME BPV IX.

3.1.1 Refrigeration System

3.1.1.1 Equipment

Necessary supports shall be provided for all equipment, appurtenances, and pipe as required, including frames or supports for compressors, pumps, cooling towers, condensers, liquid coolers, and similar items. Compressors shall be isolated from the building structure. If mechanical vibration isolators are not provided, vibration absorbing foundations shall be provided. Each foundation shall include isolation units consisting of machine and floor or foundation fastenings, together with intermediate isolation material.

Other floormounted equipment shall be set on not less than a 150 mm concrete pad doweled in place. Concrete foundations for floor mounted pumps shall have a mass equivalent to three times the weight of the components, pump, base plate, and motor to be supported. In lieu of concrete pad foundation, concrete pedestal block with isolators placed between the pedestal block and the floor may be provided. Concrete pedestal block shall be of mass not less than three times the combined pump, motor, and base weights. Isolators shall be selected and sized based on load-bearing requirements and the lowest frequency of vibration to be isolated. Isolators shall limit vibration to 30 percent at lowest equipment rpm. Lines connected to pumps mounted on pedestal blocks shall be provided with flexible connectors. Foundation drawings, bolt-setting information, and foundation bolts shall be furnished prior to concrete foundation construction for all equipment indicated or required to have concrete foundations. Concrete for foundations shall be as specified in Section 03300 CASTIN-PLACE STRUCTURAL CONCRETE. Equipment shall be properly leveled, aligned, and secured in place in accordance with manufacturer's instructions.

3.1.1.2 Refrigerant Charging

a. Initial Charge: Upon completion of all the refrigerant pipe tests, the vacuum on the system shall be broken by adding the required charge of dry refrigerant for which the system is designed, in accordance with the manufacturer's recommendations. Contractor shall provide the complete charge of refrigerant in accordance with manufacturer's recommendations. Upon satisfactory completion of the system performance tests, any refrigerant that has been lost from the system shall be replaced. After the system is fully operational, service valve seal caps and blanks over gauge points shall be installed and tightened.

b. Refrigerant Leakage: If a refrigerant leak is discovered after the system has been charged, the leaking portion of the system shall immediately be isolated from the remainder of the system and the refrigerant shall be pumped into the system receiver or other suitable container. The refrigerant shall not be discharged into the atmosphere.

c. Contractor's Responsibility: The Contractor shall, at all times during the installation and testing of the refrigeration system, take steps to prevent the release of refrigerants into the atmosphere. The steps shall include, but not be limited to, procedures which will minimize the release of refrigerants to the atmosphere and the use of refrigerant recovery devices to remove refrigerant from the system and store the refrigerant for reuse or reclaim. At no time shall more than 85 grams of refrigerant be released to the atmosphere in any one occurrence. Any system leaks within the first year shall be repaired in accordance with the specified requirements including material, labor, and refrigerant if the leak is the result of defective equipment, material, or installation.

3.1.1.3 Oil Charging

Except for factory sealed units, two complete charges of lubricating oil for each compressor crankcase shall be furnished. One charge shall be used during the performance testing period, and upon the satisfactory completion of the tests, the oil shall be drained and replaced with the second charge.

3.1.1.4 Automatic Controls

Automatic controls for the central refrigeration system specified in paragraph REFRIGERATION SYSTEM shall be provided with the central refrigeration equipment. These controls shall operate automatically to balance the equipment capacity with the load on the air conditioning system, and shall be fully coordinated with and integrated into the temperature control system specified in Section 15895 AIR

SUPPLY, DISTRIBUTION, VENTILATION, AND EXHAUST SYSTEM and 15950 HEATING, VENTILATING AND AIR CONDITIONING (HVAC) CONTROL SYSTEMS .

3.1.2 General Piping Installation

3.1.2.1 Brazed Joints

Before brazing copper joints, both the outside of the tube and the inside of the fitting shall be cleaned with a wire fitting brush until the entire joint surface is bright and clean. Brazing flux shall not be used. Surplus brazing material shall be removed at all joints. Steel tubing joints shall be made in accordance with the manufacturer's recommendations. Joints in steel tubing shall be painted with the same material as the baked-on coating within 8 hours after joints are made. Tubing shall be protected against oxidation during brazing by continuous purging of the inside of the piping using nitrogen. All piping shall be supported prior to brazing and shall not be sprung or forced.

3.1.2.2 Threaded Joints

Threaded joints shall be made with tapered threads and made tight with PTFE tape complying with ASTM D 3308 or equivalent thread-joint compound applied to the male threads only. Not more than three threads shall show after the joint is made.

3.1.2.3 Welded Joints

Welding shall be in accordance with qualified procedures using qualified welders and welding operators. Procedures and welders shall be qualified in accordance with ASME BPV IX. Welding procedures qualified by others, and welders and welding operators qualified by another employer may be accepted as permitted by ASME B31.1. Contracting Officer shall be notified 24 hours in advance of welding tests and the tests shall be performed at the work site if practical. A permanent mark shall be applied near each weld to identify the welder who made that weld. Welded joints in steel refrigerant piping shall be fusion-welded. Changes in direction of piping shall be made with welded fittings only; mitering or notching pipe or other similar construction to form elbows or tees will not be permitted. Branch connections shall be made with welding tees or forged welding branch outlets. Steel pipe shall be thoroughly cleaned of all scale and foreign matter before the piping is assembled. During welding the pipe and fittings shall be filled with an inert gas, such as nitrogen, to prevent the formation of scale. Beveling, alignment, heat treatment, and inspection of weld shall conform to ASME B31.1. Weld defects shall be removed and rewelded at no additional cost to the Government. Electrodes shall be stored and dried in accordance with AWS D1.1 or as recommended by the manufacturer. Electrodes that have been wetted or that have lost any of their coating shall not be used.

3.1.2.4 Flanged Joints

Flanged joints shall be faced true, provided with gaskets suitable for use with refrigerants and made square and tight. When steel refrigerant piping is used, union or flange joints shall be provided in each line immediately preceding the connection to each piece of equipment requiring maintenance, such as compressors, coils, chillers, control valves, and other similar items.

3.1.2.5 Flared Connections

When flared connections are used, a suitable lubricant shall be used between the back of the flare and the nut in order to avoid tearing the flare while tightening the nut.

3.1.2.6 Thermometers

Thermometers shall be located specifically on, but not limited to the following: The sensing element of each automatic temperature control device where a thermometer is not an integral part thereof, the liquid line receiver and the suction line at each evaporator or liquid cooler.

3.1.2.7 Supports

a. General: All refrigerant pipe supports shall be in accordance with ASME B31.5. Hangers used to support piping 50 mm nominal and larger shall be fabricated to permit adequate adjustment after erection while still supporting the load. Pipe guides and anchors shall be installed to keep pipes in accurate alignment, to direct the expansion movement, and to prevent buckling, swaying, and undue strain. Piping subjected to vertical movement, when operating temperatures exceed ambient temperatures, shall be supported by variable spring hangers and supports or by constant support hangers.

b. Seismic Requirements: All piping and attached valves shall be supported and braced to resist seismic loads as specified under Section 13080 SEISMIC PROTECTION FOR MECHANICAL, ELECTRICAL EQUIPMENT as shown on the drawings. Structural steel required for reinforcement to properly support piping, headers, and equipment but not shown shall be provided under this section. Material used for support shall be as specified under Section 05120 STRUCTURAL STEEL.

c. Structural Attachments: Structural steel brackets required to support piping, headers, and equipment, but not shown, shall be provided under this section. Material and installation shall be as specified under Section 05120 STRUCTURAL STEEL.

3.1.2.8 Pipe Hangers, Inserts, and Supports

Pipe hangers, inserts, and supports shall conform to MSS SP-58 and MSS SP-69, except as modified herein. Pipe hanger types 5, 12, and 26 shall not be used.

a. Hangers: Type 3 shall not be used on insulated piping.

b. Inserts: Type 18 inserts shall be secured to concrete forms before concrete is placed. Continuous inserts which allow more adjustments may be used if they otherwise meet the requirements for Type 18 inserts.

c. C-Clamps: Type 19 and 23 C-clamps shall be torqued per MSS SP-69 and have both locknuts and retaining devices, furnished by the manufacturer. Field-fabricated C-clamp bodies or retaining devices are not acceptable.

d. Angle Attachments: Type 20 attachments used on angles and channels shall be furnished with an added malleable-iron heel plate or adapter.

e. Hangers: Type 24 may be used only on trapeze hanger systems or on fabricated frames.

f. Saddles and Shields: Where Type 39 saddle or Type 40 shield are permitted for a particular pipe attachment application, the Type 39 saddle, connected to the pipe, shall be used on all pipe 100 mm and larger when the temperature of the medium is 16 degrees C or higher. Type 40 shields shall be used on all piping less than 100 mm and all piping 100 mm and larger carrying medium less than 16 degrees C. A high

density insulation insert of cellular glass shall be used under the Type 40 shield for piping 50 mm and larger.

g. Horizontal Pipe Supports: Horizontal pipe supports shall be spaced as specified in MSS SP-69 and a support shall be installed not over 300 mm from the pipe fitting joint at each change in direction of the piping. Pipe supports shall be spaced not over 1.5 m apart at valves. Pipe hanger loads suspended from steel joist with hanger loads between panel points in excess of 22 kg shall have the excess hanger loads suspended from panel points.

h. Vertical Pipe Supports: Vertical pipe shall be supported at each floor, except at slab-on-grade, and at intervals of not more than 4.5 m, not more than 2.4 m from end of risers, and at vent terminations.

i. Pipe Guides: Type 35 guides using, steel, reinforced polytetrafluoroethylene (PTFE) or graphite slides shall be provided where required to allow longitudinal pipe movement. Lateral restraints shall be provided as required. Slide materials shall be suitable for the system operating temperatures, atmospheric conditions, and bearing loads encountered.

j. Steel Slides: Where steel slides do not require provisions for restraint of lateral movement, an alternate guide method may be used. On piping 100 mm nominal and larger, a Type 39 saddle shall be used. On piping under 100 mm nominal, a Type 40 protection shield may be attached to the pipe or insulation and freely rest on a steel slide plate.

k. High Temperature Guides with Cradles: Where there are high system temperatures and welding to piping is not desirable, then the Type 35 guide shall include a pipe cradle, welded to the guide structure and strapped securely to the pipe. The pipe shall be separated from the slide material by at least 100 mm, or by an amount adequate for the insulation, whichever is greater.

l. Multiple Pipe Runs: In the support of multiple pipe runs on a common base member, a clip or clamp shall be used where each pipe crosses the base support member. Spacing of the base support members shall not exceed the hanger and support spacing required for an individual pipe in the multiple pipe run.

3.1.2.9 Pipe Alignment Guides

Pipe alignment guides shall be provided where indicated for expansion loops, offsets, and bends and as recommended by the manufacturer for expansion joints, not to exceed 1.5 m on each side of each expansion joint, and in lines 100 mm nominal or smaller not more than 600 mm on each side of the joint.

3.1.2.10 Anchors

Anchors shall be provided wherever necessary or indicated to localize expansion or to prevent undue strain on piping. Anchors shall consist of heavy steel collars with lugs and bolts for clamping and attaching anchor braces, unless otherwise indicated. Anchor braces shall be installed in the most effective manner to secure the desired results using turnbuckles where required. Supports, anchors, or stays shall not be attached where they will injure the structure or adjacent construction during installation or by the weight of expansion of the pipeline. Detailed drawings of pipe anchors shall be submitted for approval before installation.

3.1.2.11 Pipe Sleeves

Sleeves shall not be installed in structural members except where indicated or approved. Rectangular and square openings shall be as detailed. Each sleeve shall extend through its respective wall, floor, or roof, and shall be cut flush with each surface. Pipes passing through concrete or masonry wall or concrete floors or roofs shall be provided with pipe sleeves fitted into place at the time of construction. Unless otherwise indicated, sleeves shall be of such size as to provide a minimum of 6 mm all-around clearance between bare pipe and sleeves or between jacketed-insulation and sleeves. Sleeves in bearing walls, waterproofing membrane floors, and wet areas shall be steel pipe or cast iron pipe. Sleeves in non-bearing walls, floors, or ceilings may be steel pipe, cast iron pipe, galvanized sheet metal with lock-type longitudinal seam and of the metal thickness indicated, or moisture resistant fiber or plastic. Except in pipe chases or interior walls, the annular space between pipe and sleeve or between jacket over-insulation and sleeve shall be sealed as indicated and specified in Section 07920 JOINT SEALING. Pipes passing through wall waterproofing membrane shall be sleeved as specified above, and a waterproofing clamping flange shall be installed.

a. Roof and Floor Penetrations: Pipes passing through roof or floor waterproofing membrane shall be installed through a 5.17 kg/sq m copper sleeve, or a 0.81 mm thick aluminum sleeve, each within an integral skirt or flange. Flashing sleeve shall be suitably formed, and skirt or flange shall extend not less than 200 mm from the pipe and shall be set over the roof or floor membrane in a troweled coating of bituminous cement. The flashing sleeve shall extend up the pipe a minimum of 50 mm above highest floor level of the roof or a minimum of 250 mm above the roof, whichever is greater, or 250 mm above the floor. The annular space between the flashing sleeve and the bare pipe or between the flashing sleeve and the metal-jacket-covered insulation shall be sealed as indicated. Pipes up to and including 250 mm nominal in diameter passing through roof or floor waterproofing membrane may be installed through a cast iron sleeve with caulking recess, anchor lugs, flashing clamp device, and pressure ring with brass bolts. Waterproofing membrane shall be clamped into place and sealant shall be placed in the caulking recess. In lieu of a waterproofing clamping flange and caulking and sealing of annular space between pipe and sleeve or conduit and sleeve, a modular mechanical type sealing assembly may be installed. Seals shall consist of interlocking synthetic rubber links shaped to continuously fill the annular space between the pipe/conduit and sleeve with corrosion protected carbon steel bolts, nuts, and pressure plates. Links shall be loosely assembled with bolts to form a continuous rubber belt around the pipe with a pressure plate under each bolt head and each nut. After the seal assembly is properly positioned in the sleeve, tightening of the bolt shall cause the rubber sealing elements to expand and provide a watertight seal between the pipe/conduit seal between the pipe/conduit and the sleeve. Each seal assembly shall be sized as recommended by the manufacturer to fit the pipe/conduit and sleeve involved. The Contractor electing to use the modular mechanical type seals shall provide sleeves of the proper diameters.

b. Fire-Rated Walls and Partitions: Penetration of fire-rated walls and partitions shall be sealed as specified in Section 07840 FIRESTOPPING.

3.1.2.12 Escutcheons

Finished surfaces where exposed piping, bare or insulated, pass through floors, walls, or ceilings, except in boiler, utility, or equipment rooms, shall be provided with escutcheons. Where sleeves project slightly from floors, special deep-type escutcheons shall be used. Escutcheon shall be secured to pipe or pipe covering.

3.1.2.13 Access Panels

Access panels shall be provided for all concealed valves, vents, controls, and items requiring inspection or maintenance. Access panels shall be of sufficient size and located so that the concealed items may be

serviced and maintained or completely removed and replaced. Access panels shall be as specified in Section 05500 MISCELLANEOUS METAL.

3.1.3 Water Piping

Pipe and fitting installation shall conform to the requirements of ASME B31.1. Pipe shall be cut accurately to measurements established at the jobsite, and worked into place without springing or forcing, completely clearing all windows, doors, and other openings. Cutting or other weakening of the building structure to facilitate piping installation will not be permitted without written approval. Pipe or tubing shall be cut square, shall have burrs removed by reaming, and shall permit free expansion and contraction without causing damage to the building structure, pipe, joints, or hangers.

3.1.3.1 Directional Changes

Changes in direction shall be made with fittings, except that bending of pipe 100 mm nominal and smaller will be permitted, provided a pipe bender is used and wide weep bends are formed. The centerline radius of bends shall not be less than 6 diameters of the pipe. Bent pipe showing kinks, wrinkles, flattening, or other malformations will not be accepted.

3.1.3.2 Functional Requirements

Horizontal supply mains shall pitch down in the direction of flow as indicated. The grade shall not be less than 2 mm in 1 m. Reducing fittings shall be used for changes in pipe sizes. Open ends of pipelines and equipment shall be capped or plugged during installation to keep dirt or other foreign materials out of the system. Pipe not otherwise specified shall be uncoated. Connections to appliances shall be made with malleable iron unions for steel pipe 65 mm nominal or less in diameter, and with flanges for pipe 80 mm nominal and above in diameter. Connections between ferrous and copper piping shall be electrically isolated from each other with dielectric unions or flanges. All piping located in air plenums shall conform to NFPA 90A requirements. Pipe and fittings installed in inaccessible conduits or trenches under concrete floor slabs shall be welded.

3.1.3.3 Valves

Isolation gate or ball valves shall be installed on each side of each piece of equipment, at the midpoint of all looped mains, and at any other points indicated or required for draining, isolating, or sectionalizing purpose. Isolation valves may be omitted where balancing cocks are installed to provide both balancing and isolation functions. Each valve except check valves shall be identified. Valves in horizontal lines shall be installed with stems horizontal or above.

3.1.3.4 Air Vents

Air vents shall be provided at all high points, on all water coils, and where indicated to ensure adequate venting of the piping system.

3.1.3.5 Drains

Drains shall be provided at all low points and where indicated to ensure complete drainage of the piping. Drains shall be accessible, and shall consist of nipples and caps or plugged tees unless otherwise indicated.

3.1.3.6 Flexible Pipe Connectors

Preinsulated flexible pipe connectors shall be attached to other components in strict accordance with the latest printed instructions of the manufacturer to ensure a vapor tight joint. Hangers, when required to suspend the connectors, shall be of the type recommended by the flexible pipe connector manufacturer and shall be provided at the intervals recommended.

3.1.3.7 Flanges and Unions

Except where copper tubing is used, union or flanged joints shall be provided in each line immediately preceding the connection to each piece of equipment or material requiring maintenance such as coils, pumps, control valves, and other similar items.

3.1.3.8 Grooved Mechanical Joints

Grooves shall be prepared in accordance with the coupling manufacturer's instructions. Pipe and groove dimensions shall comply with the tolerances specified by the coupling manufacturer. The diameter of grooves made in the field shall be measured using a "go/no-go" gauge, vernier or dial caliper, or narrow-land micrometer. Groove width and dimension of groove from end of pipe shall be measured and recorded for each change in grooving tool setup to verify compliance with coupling manufacturer's tolerances.

3.1.4 Refrigeration Piping

Unless otherwise specified, pipe and fittings installation shall conform to requirements of ASME B31.5. Pipe shall be cut accurately to measurement established at the jobsite and worked into place without springing or forcing. Cutting or otherwise weakening of the building structure to facilitate piping installation will not be permitted without written approval. Pipes shall be cut square, shall have burrs removed by reaming, and shall be installed in a manner to permit free expansion and contraction without damage to joints or hangers. Filings, dust, or dirt shall be wiped from interior of pipe before connections are made.

3.1.4.1 Directional Changes

Changes in direction shall be made with fittings, except that bending of pipe 100 mm nominal and smaller will be permitted, provided a pipe bender is used and wide-sweep bends are formed. The centerline radius of bends shall not be less than 6 diameters of the pipe. Bent pipe showing kinks, wrinkles, or other malformations will not be accepted.

3.1.4.2 Functional Requirements

All piping shall be installed 4 mm per m of pipe in the direction of flow to ensure adequate oil drainage. Open ends of refrigerant lines or equipment shall be properly capped or plugged during installation to keep moisture, dirt, or other foreign material out of the system. Piping shall remain capped until installation. Equipment piping shall be in accordance with the equipment manufacturer's recommendations and the contract drawings.

3.1.4.3 Valves

a. Stop valves shall be installed on each side of each piece of equipment such as compressors condensers, evaporators, receivers, and other similar items in multiple-unit installation, to provide partial system isolation as required for maintenance or repair. Angle and globe valves shall be installed with

stems horizontal unless otherwise indicated. Ball valves shall be installed with stems positioned to facilitate operation and maintenance. All valves except check valves shall be identified with a brass or aluminum tag not less than 35 mm in diameter, correctly stamped to explain the valve function, and with a number for identification. Tags shall be secured to the valve with No. 12 AWG copper wire.

b. Expansion valves shall be installed with the thermostatic expansion valve bulb located on top of the suction line when the suction line is less than 54 mm in diameter and at the 4 o'clock or 8 o'clock position on lines larger than 54 mm. The bulb shall be securely fastened with two clamps. The bulb shall be insulated. The bulb shall installed in a horizontal portion of the suction line, if possible, with the pigtail on the bottom. If the bulb must be installed in a vertical line, the bulb tubing shall be facing up.

3.1.4.4 Vibration Dampers

Vibration damper shall be provided in the suction and discharge lines on spring mounted compressors. Vibration dampers shall be installed parallel with the shaft of the compressor and shall be anchored firmly at the upstream end on the suction line and the downstream end in the discharge line.

3.1.4.5 Strainers

Strainers shall be provided immediately ahead of all solenoid valves and expansion devices. Strainers may be an integral part of the expansion valve.

3.1.4.6 Filter Dryer

A liquid line filter dryer shall be provided on each refrigerant circuit located such that all liquid refrigerant passes through a filter dryer. The filter dryer shall be sized in accordance with the manufacturer's recommendations for the system in which it is installed. The filter dryer shall be installed such that the filter dryer can be isolated from the system, the isolated portion of the system evacuated, and the filter dryer replaced. Filter dryers shall be installed in the horizontal position except replaceable core filter dryers may be installed in the vertical position with the access flange on the bottom.

3.1.4.7 Sight Glass

A moisture indicating sight glass shall be installed in all refrigerant circuits down stream of all filter dryers.

3.1.4.8 Discharge Line Oil Separator

Discharge line oil separator shall be provided in the discharge line from each compressor. Oil return line shall be connected to the compressor as recommended by the compressor manufacturer.

3.1.4.9 Accumulator

Accumulators shall be provided in the suction line to each compressor.

3.1.5 Omitted

3.1.6 Field Applied Insulation

Field applied insulation other than that specified for water boxes and headers shall be as specified in Section 15080 THERMAL INSULATION FOR MECHANICAL SYSTEMS.

3.1.7 Factory Applied Insulation

3.1.7.1 Refrigerant Suction Lines

Refrigerant suction lines between the cooler and each compressor shall be insulated with not less than 19 mm thick unicellular plastic foam.

3.1.7.2 Liquid Coolers

Liquid coolers (including chilled water headers or boxes), which may have factory or field applied insulation, shall be insulated with unicellular plastic foam. Insulation shall be not less than 19 mm thick or have a maximum thermal conductivity of 1.59 W/((sq. m)(degree K)). In lieu of the above insulation, a 50 mm thickness of urethane foam may be used. Urethane foam shall be completely covered and sealed with a sheet metal jacket not lighter than 1.0 mm. Insulation on heads of coolers shall be constructed to provide easy removal and replacement of heads without damage to the insulation.

3.2 TESTS

3.2.1 Field Tests

Tests shall be conducted in the presence of the Contracting Officer. Water and electricity required for the tests will be furnished by the Government. Any material, equipment, instruments, and personnel required for the test shall be provided by the Contractor. The services of a qualified technician shall be provided as required to perform all tests and procedures indicated herein. Field tests shall be coordinated with Section 15990 TESTING, ADJUSTING, AND BALANCING OF HVAC SYSTEMS.

3.2.1.1 Water Pipe Testing

After cleaning, water piping shall be hydrostatically tested at a pressure equal to 150 percent of the total system operating pressure for period of time sufficient to inspect every joint in the system and in no case less than 2 hours. Leaks shall be repaired and piping retested until test is successful. No loss of pressure shall be allowed. Leaks shall be repaired by rewelding or replacing pipe or fittings. Caulking of joints will not be permitted. Concealed and insulated piping shall be tested in place before concealing.

3.2.1.2 Refrigerant Pipe Testing

a. Refrigerant Leakage Test: After all components of the refrigerant system have been installed and the piping connected, the system shall be subjected to a refrigerant leakage test. The refrigerant leakage test shall be done with dry nitrogen before any refrigerant pipe is insulated or covered. High and low side of the refrigerant system shall be tested for the minimum refrigerant leakage test pressure specified in ASHRAE 15, for the refrigerant employed in the system. System shall be proved tight and free of leaks by allowing the refrigerant leakage test pressure to remain on the system for 24 hours with no drop in pressure. The initial test pressure and surrounding air temperature will be recorded. After the 24-hour hold period, the final system pressure and surrounding air temperature will be recorded. A correction of 3.7 kPa shall be allowed for each degree C change in the initial and final temperature of the surrounding

air, plus for an increase and minus for a decrease. The system shall have passed the refrigerant leakage test if the corrected final system pressure is equal to the initial system test pressure. If the pressures are not equal, the leaks shall be located and repaired.

b. Refrigerant Leaks: To repair leaks, the joint shall be taken apart, thoroughly cleaned, and remade as a new joint. Joints repaired by caulking or remelting and adding more brazing material will not be acceptable. After leak repairs have been made, the refrigerant leakage test shall be conducted again.

c. Evacuation Test: After the foregoing tests have been satisfactorily completed and the pressure relieved, entire system shall be evacuated to an absolute pressure of 300 microns. During evacuation of the system, the ambient temperature shall be higher than 2 degrees C. Vacuum line shall be closed, and the system shall stand for 1 hour. After this period, the absolute pressure shall not exceed 500 microns. If the pressure rises over 500 microns, the system shall continue to be evacuated until the system reaches 300 microns and can stand for 1 hour with the vacuum line closed without the absolute pressure rising over 500 microns. During evacuation, pressures shall be recorded by a thermocouple type, electronic type, or a calibrated-micron type gauge.

3.2.2 System Performance Tests

After the foregoing tests have been completed and before each refrigeration system is accepted, tests to demonstrate the general operating characteristics of all equipment shall be conducted by a registered professional engineer or an approved manufacturer's startup representative experienced in system startup and testing, at such times as directed. Tests shall cover a period of not less than 5 days for each system and shall demonstrate that the entire system is functioning in accordance with the drawings and specifications. Corrections and adjustments shall be made as necessary and tests shall be re-conducted to demonstrate that the entire system is functioning as specified.

3.3 OMITTED

3.4 MANUFACTURER'S FIELD SERVICE

The services of a factory-trained representative shall be provided for 7 days. The representative shall advise on the following:

a. Hermetic machines:

(1) Testing hermetic water-chilling unit under pressure for refrigerant leaks; evacuation and dehydration of machine to an absolute pressure of not over 300 microns.

(2) Charging the machine with refrigerant.

(3) Starting the machine.

b. Open Machines:

(1) Erection, alignment, testing, and dehydrating.

(2) Charging the machine with refrigerant.

(3) Starting the machine.

3.5 CLEANING AND ADJUSTING

3.5.1 Piping

Pipes shall be cleaned free of scale and thoroughly flushed of all foreign matter. A temporary bypass shall be provided for all water coils to prevent flushing water from passing through coils. Strainers and valves shall be thoroughly cleaned. Prior to testing and balancing, air shall be removed from all water systems by operating the air vents. Temporary measures, such as piping the overflow from vents to a collecting vessel shall be taken to avoid water damage during the venting process. Air vents shall be plugged or capped after the system has been vented.

3.5.2 Equipment

Equipment shall be wiped clean, with all traces of oil, dust, dirt, or paint spots removed. Temporary filters shall be provided for all fans that are operated during construction, and new filters shall be installed after all construction dirt has been removed from the building. System shall be maintained in this clean condition until final acceptance. Bearings shall be properly lubricated with oil or grease as recommended by the manufacturer. Belts shall be tightened to proper tension. Control valves and other miscellaneous equipment requiring adjustment shall be adjusted to setting indicated or directed. Fans shall be adjusted to the speed indicated by the manufacturer to meet specified conditions.

3.6 DEMONSTRATIONS

Contractor shall conduct a training course for the operating staff as designated by the Contracting Officer. The training period shall consist of a total 8 hours of normal working time and start after the system is functionally completed but prior to final acceptance tests. The field instructions shall cover all of the items contained in the Operation and Maintenance Manuals as well as demonstrations of routine maintenance operations.

END OF SECTION

SECTION 15895

AIR SUPPLY, DISTRIBUTION, VENTILATION, AND EXHAUST SYSTEM

PART 1 GENERAL

1.1 REFERENCES

The publications listed below form a part of this specification to the extent referenced. The publications are referred to in the text by basic designation only.

AIR CONDITIONING AND REFRIGERATION INSTITUTE (ARI)

ARI 350 (1986) Sound Rating of Non-Ducted Indoor Air-Conditioning Equipment

ARI 430 (1989) Central-Station Air-Handling Units

ARI 440 (1989) Room Fan-Coil Air-Conditioners

ARI 880 (1990) Air Terminals

ARI Guideline D (1987) Application and Installation of Central Station Air-Handling Units

AIR CONDITIONING CONTRACTORS OF AMERICA (ACCA)

ACCA Manual 4 (1990) Installation Techniques for Perimeter Heating & Cooling

AIR DIFFUSION COUNCIL (ADC)

ADC 1062:GRD (1984) Test Codes for Grilles, Registers and Diffusers

AIR MOVEMENT AND CONTROL ASSOCIATION (AMCA)

AMCA 210 (1985) Laboratory Methods of Testing Fans for Rating

AMCA 300 (1994) Reverberant Room Method for Sound Testing of Fans

AMERICAN BEARING MANUFACTURERS ASSOCIATION (ABEMA)

ABEMA 9 (1990) Load Ratings and Fatigue Life for Ball Bearings

ABEMA 11 (1990) Load Ratings and Fatigue Life for Roller Bearings

AMERICAN SOCIETY FOR TESTING AND MATERIALS (ASTM)

ASTM A 47 (1990) Ferritic Malleable Iron Castings

ASTM A 53 (1993a) Pipe, Steel, Black and Hot-Dipped, Zinc-Coated Welded and Seamless

ASTM A 106	(1993) Seamless Carbon Steel Pipe for High-Temperature Service
ASTM A 123	(1989a) Zinc (Hot-Dip Galvanized) Coatings on Iron and Steel Products
ASTM A 167	(1993) Stainless and Heat-Resisting Chromium-Nickel Steel Plate, Sheet, and Strip
ASTM A 181	(1993a) Forgings, Carbon Steel, for General-Purpose Piping
ASTM A 183	(1983; R 1990) Carbon Steel Track Bolts and Nuts
ASTM A 193	(1993a) Alloy-Steel and Stainless Steel Bolting Materials for High-Temperature Service
ASTM A 234	(1992a) Piping Fittings of Wrought Carbon Steel and Alloy Steel for Moderate and Elevated Temperatures
ASTM A 525	(1993) General Requirement for Steel Sheet, Zinc-Coated (Galvanized) by the Hot-Dip Process
ASTM A 536	(1984; R 1993) Ductile Iron Castings
ASTM A 733	(1989) Welded and Seamless Carbon Steel and Austenitic Stainless Steel Pipe Nipples
ASTM B 62	(1993) Composition Bronze or Ounce Metal Castings
ASTM B 75	(1993) Seamless Copper Tube
ASTM B 88	(1993a) Seamless Copper Water Tube
ASTM B 117	(1994) Salt Spray (Fog) Testing
ASTM C 107	(1989) Panel Spalling Testing High-Duty Fireclay Brick
ASTM C 1071	(1991) Thermal and Acoustical Insulation (Glass Fiber, Duct Lining Material)
ASTM D 520	(1984; R 1989) Zinc Dust Pigment
ASTM D 1384	(1993) Corrosion Test for Engine Coolants in Glassware
ASTM D 1654	(1992) Evaluation of Painted or Coated Specimens Subjected to Corrosive Environments
ASTM D 2000	(1990) Rubber Products in Automotive Applications
ASTM D 3359	(1993) Measuring Adhesion by Tape Test
ASTM E 437	(1992) Industrial Wire Cloth and Screens (Square Opening Series)

AMERICAN SOCIETY OF HEATING, REFRIGERATING AND AIR-CONDITIONING ENGINEERS (ASHRAE)

ASHRAE 52.1	(1992) Gravimetric and Duct-Spot Procedures for Air-Cleaning Devices Used in General Ventilation for Removing Particulate Matter
ASHRAE 68	(1986) Laboratory Method of Testing In-Duct Sound Power Measurement Procedures for Fans

AMERICAN SOCIETY OF MECHANICAL ENGINEERS (ASME)

ASME B1.20.1	(1983; R 1992) Pipe Threads, General Purpose (Inch)
ASME B16.3	(1992) Malleable Iron Threaded Fittings
ASME B16.5	(1988; Errata; B16.5a) Pipe Flanges and Flanged Fittings
ASME B16.9	(1993) Factory-Made Wrought Steel Buttwelding Fittings
ASME B16.11	(1991) Forged Fittings, Socket-Welding and Threaded
ASME B16.18	(1984) Cast Copper Alloy Solder Joint Pressure Fittings
ASME B16.21	(1992) Nonmetallic Flat Gaskets for Pipe Flanges
ASME B16.22	(1989) Wrought Copper and Copper Alloy Solder Joint Pressure Fittings
ASME B16.26	(1988) Cast Copper Alloy Fittings for Flared Copper Tubes
ASME B16.39	(1986) Malleable Iron Threaded Pipe Unions Classes 150, 250, and 300
ASME B31.1	(1992; B31.1a; B31.1b) Power Piping
ASME B40.1	(1991) Gauges - Pressure Indicating Dial Type - Elastic Element
ASME BPV IX	(1992; Addenda Dec 1992, Dec 1993) Boiler and Pressure Vessel Code; Section IX, Welding and Brazing Qualifications

AMERICAN WATER WORKS ASSOCIATION (AWWA)

AWWA C606	(1987) Grooved and Shouldered Joints

AMERICAN WELDING SOCIETY (AWS)

AWS D1.1	(1994) Structural Welding Code - Steel

COMMERCIAL ITEM DESCRIPTIONS (CID)

CID A-A-1419	(Rev D) Filter Element, Air Conditioning (Viscous-Impingement and Dry Types, Replaceable)

FEDERAL SPECIFICATIONS (FS)

FS WW-V-35	(Rev C) Valve, Ball

MANUFACTURERS STANDARDIZATION SOCIETY OF THE VALVE AND FITTINGS INDUSTRY (MSS)

MSS SP-25	(1993) Standard Marking System for Valves, Fittings, Flanges and Unions
MSS SP-58	(1993) Pipe Hangers and Supports - Materials, Design and Manufacture
MSS SP-69	(1991) Pipe Hangers and Supports - Selection and Application
MSS SP-70	(1990) Cast Iron Gate Valves, Flanged and Threaded Ends
MSS SP-71	(1990) Cast Iron Swing Check Valves, Flanged and Threaded Ends
MSS SP-80	(1987) Bronze Gate, Globe, Angle and Check Valves
MSS SP-85	(1994) Cast Iron Globe & Angle Valves, Flanged and Threaded Ends

NATIONAL ELECTRICAL MANUFACTURERS ASSOCIATION (NEMA)

NEMA MG 1	(1993) Motors and Generators

NATIONAL FIRE PROTECTION ASSOCIATION (NFPA)

NFPA 90A	(1993) Installation of Air Conditioning and Ventilating Systems

SHEET METAL AND AIR CONDITIONING CONTRACTORS' NATIONAL ASSOCIATION (SMACNA)

SMACNA-05	(1992) Fire, Smoke and Radiation Damper Installation Guide for HVAC Systems
SMACNA-10	(1985) HVAC Air Duct Leakage Test Manual

UNDERWRITERS LABORATORIES (UL)

UL-01	(1994; Supple) Building Materials Directory
UL-03	(1994) Electrical Construction Materials Directory
UL-05	(1994; Supple) Fire Resistance Directory

UL 94	(1991; Rev thru May 1994) Tests for Flammability of Plastic Materials for Parts in Devices and Appliances
UL 181	(1994) Factory-Made Air Ducts and Air Connectors
UL 214	(1993) Tests for Flame-Propagation of Fabrics and Films
UL 555	(1990; Rev thru Nov 1993) Fire Dampers
UL 586	(1990) High-Efficiency, Particulate, Air Filter Units
UL 705	(1994; Rev Jun 1994) Power Ventilators
UL 900	(1994) Test Performance of Air Filter Units
UL 1995	(1990) Heating and Cooling Equipment

1.2 COORDINATION OF TRADES

Ductwork, piping offsets, fittings, and accessories shall be furnished as required to provide a complete installation and to eliminate interference with other construction.

1.3 DELIVERY AND STORAGE

Equipment delivered and placed in storage shall be stored with protection from the weather, humidity and temperature variations, dirt and dust, or other contaminants.

1.4 SUBMITTALS

Government approval is required for submittals with a "GA" designation; submittals having an "FIO" designation are for information only. The following shall be submitted in accordance with Section 01300 SUBMITTAL PROCEDURES:

SD-01 Data

Components and Equipment Data; FIO.

Manufacturer's catalog data shall be included with the detail drawings for the following items. The data shall be highlighted to show model, size, options, etc., that are intended for consideration. Data shall be adequate to demonstrate compliance with contract requirements for the following:

a. Piping Components

b. Ductwork Components

c. Air Systems Equipment

d. Air Handling Units

e. Omitted

f. Terminal Units

SD-04 Drawings

Air Supply, Distribution, Ventilation, and Exhaust Equipment; FIO.

Drawings shall consist of equipment layout including assembly and installation details and electrical connection diagrams; ductwork layout showing the location of all supports and hangers, typical hanger details, gauge reinforcement, reinforcement spacing rigidity classification, and static pressure and seal classifications; and piping layout showing the location of all guides and anchors, the load imposed on each support or anchor, and typical support details. Drawings shall include any information required to demonstrate that the system has been coordinated and will properly function as a unit and shall show equipment relationship to other parts of the work, including clearances required for operation and maintenance.

SD-06 Instructions

Test Procedures; FIO.

Proposed test procedures for piping hydrostatic test, ductwork leak test, and performance tests of systems, at least 2 weeks prior to the start of related testing.

Welding Procedures; FIO.

A copy of qualified welding procedures, at least 2 weeks prior to the start of welding operations.

System Diagrams; GA.

Proposed diagrams, at least 2 weeks prior to start of related testing. System diagrams that show the layout of equipment, piping, and ductwork, and typed condensed operation manuals explaining preventative maintenance procedures, methods of checking the system for normal, safe operation, and procedures for safely starting and stopping the system shall be framed under glass or laminated plastic. After approval, these items shall be posted where directed.

SD-07 Schedules

Test Schedules; FIO.

Proposed test schedules for hydrostatic test of piping, ductwork leak test, and performance tests, at least 2 weeks prior to the start of related testing.

Field Training Schedule; FIO.

Proposed schedule for field training, at least 2 weeks prior to the start of related training.

SD-08 Statements

Similar Services; FIO.

Statement demonstrating successful completion of similar services on at least five projects of similar size and scope, at least 2 weeks prior to submittal of other items required by this section.

Welding Qualification; FIO.

A list of names and identification symbols of qualified welders and welding operators, at least 2 weeks prior to the start of welding operations.

SD-09 Reports

Test Reports; FIO.

Test reports for the piping hydrostatic test, ductwork leak test, and performance tests in booklet form, upon completion of testing. Reports shall document phases of tests performed including initial test summary, repairs/adjustments made, and final test results.

SD-13 Certificates

Bolts; FIO.

Written certification from the bolt manufacturer that the bolts furnished comply with the requirements of this specification. The certification shall include illustrations of product markings, and the number of each type of bolt to be furnished.

SD-19 Operation and Maintenance Manuals

Air Supply, Distribution, Ventilation, and Exhaust Manuals; FIO.

Six manuals listing step-by-step procedures required for system startup, operation, shutdown, and routine maintenance, at least 2 weeks prior to field training. The manuals shall include the manufacturer's name, model number, parts list, list of parts and tools that should be kept in stock by the owner for routine maintenance including the name of a local supplier, simplified wiring and controls diagrams, troubleshooting guide, and recommended service organization (including address and telephone number) for each item of equipment. Each service organization submitted shall be capable of providing 4-hour onsite response to a service call on an emergency basis.

PART 2 PRODUCTS

2.1 STANDARD PRODUCTS

Components and equipment shall be standard products of a manufacturer regularly engaged in the manufacturing of products that are of a similar material, design and workmanship. The standard products shall have been in satisfactory commercial or industrial use for 2 years before bid opening. The 2-year experience shall include applications of components and equipment under similar circumstances and of similar size. The 2 years must be satisfactorily completed by a product which has been sold or is offered for sale on the commercial market through advertisements, manufacturers' catalogs, or brochures. Products having less than a 2-year field service record will be acceptable if a certified record of satisfactory field

operation, for not less than 6,000 hours exclusive of the manufacturer's factory tests, can be shown. The equipment items shall be supported by a service organization.

2.2 ASBESTOS PROHIBITION

Asbestos and asbestos-containing products shall not be used.

2.3 NAMEPLATES

Equipment shall have a nameplate that identifies the manufacturer's name, address, type or style, model or serial number, and catalog number.

2.4 EQUIPMENT GUARDS AND ACCESS

Belts, pulleys, chains, gears, couplings, projecting setscrews, keys, and other rotating parts exposed to personnel contact shall be fully enclosed or guarded according to OSHA requirements. High temperature equipment and piping exposed to contact by personnel or where it creates a potential fire hazard shall be properly guarded or covered with insulation of a type specified.

2.5 PIPING COMPONENTS

2.5.1 Steel Pipe

Steel pipe shall conform to ASTM A 53, Schedule 40, Grade A or B, Type E or S.

2.5.2 Joints and Fittings For Steel Pipe

Joints shall be welded, flanged, threaded, or grooved as indicated. If not otherwise indicated, piping 25 mm and smaller shall be threaded; piping larger than 25 mm and smaller than 80 mm shall be either threaded, grooved, or welded; and piping 80 mm and larger shall be grooved, welded, or flanged. Rigid grooved mechanical joints and fittings may only be used in serviceable aboveground locations where the temperature of the circulating medium does not exceed 110 degrees C. Flexible grooved joints shall be used only as a flexible connector with grooved pipe system. Unless otherwise specified, grooved piping components shall meet the corresponding criteria specified for the similar welded, flanged, or threaded component specified herein. The manufacturer of each fitting shall be permanently identified on the body of the fitting according to MSS SP-25.

2.5.2.1 Welded Joints and Fittings

Welded fittings shall conform to ASTM A 234, and shall be identified with the appropriate grade and marking symbol. Butt-welded fittings shall conform to ASME B16.9. Socket-welded fittings shall conform to ASME B16.11.

2.5.2.2 Flanged Joints and Fittings

Flanges shall conform to ASTM A 181 and ASME B16.5, Class 150. Gaskets shall be nonasbestos compressed material according to ASME B16.21, 1.6 mm thickness, full face or self-centering flat ring type. The gaskets shall contain aramid fibers bonded with styrene butadiene rubber (SBR) or nitrile butadiene

rubber (NBR). Bolts, nuts, and bolt patterns shall conform to ASME B16.5. Bolts shall be high or intermediate strength material conforming to ASTM A 193.

2.5.2.3 Threaded Joints and Fittings

Threads shall conform to ASME B1.20.1. Unions shall conform to ASME B16.39, Class 150. Nipples shall conform to ASTM A 733. Malleable iron fittings shall conform to ASME B16.3, type as required to match piping.

2.5.2.4 Dielectric Unions and Flanges

Dielectric unions shall have the tensile strength and dimensional requirements specified. Unions shall have metal connections on both ends threaded to match adjacent piping. Metal parts of dielectric unions shall be separated with a nylon insulator to prevent current flow between dissimilar metals. Unions shall be suitable for the required operating pressures and temperatures. Dielectric flanges shall provide the same pressure ratings as standard flanges and provide complete electrical isolation.

2.5.2.5 Grooved Mechanical Joints and Fittings

Joints and fittings shall be designed for not less than 862 kPa service and shall be the product of the same manufacturer. Fitting and coupling houses shall be malleable iron conforming to ASTM A 47, Grade 32510; ductile iron conforming to ASTM A 536, Grade 65-45-12; or steel conforming to ASTM A 106, Grade B or ASTM A 53. Gaskets shall be molded synthetic rubber with central cavity, pressure responsive configuration and shall conform to ASTM D 2000 Grade No. 2CA615A15B44F17Z for circulating medium up to 110 degrees C or Grade No. M3BA610A15B44Z for circulating medium up to 93 degrees C. Grooved joints shall conform to AWWA C606. Coupling nuts and bolts shall be steel and shall conform to ASTM A 183.

2.5.3 Copper Tube

Copper tube shall conform to ASTM B 88, Type K or L.

2.5.4 Joints and Fittings For Copper Tube

Wrought copper and bronze solder-joint pressure fittings shall conform to ASME B16.22 and ASTM B 75. Cast copper alloy solder-joint pressure fittings shall conform to ASME B16.18. Cast copper alloy fittings for flared copper tube shall conform to ASME B16.26 and ASTM B 62. Brass or bronze adapters for brazed tubing may be used for connecting tubing to flanges and to threaded ends of valves and equipment. Extracted brazed tee joints produced with an acceptable tool and installed as recommended by the manufacturer may be used.

2.5.5 Valves

Valves shall be Class 125 and shall be suitable for the intended application. Valves shall meet the material, fabrication and operating requirements of ASME B31.1. Chain operators shall be provided for valves located 3 meters or higher above the floor. Valves in sizes larger than 25 mm and used on steel pipe systems, may be provided with rigid grooved mechanical joint ends. Such grooved end valves shall be subject to the same requirements as rigid grooved mechanical joints and fittings and, shall be provided by the same manufacturer as the grooved pipe joint and fitting system.

2.5.5.1 Gate Valves

Gate valves 65 mm and smaller shall conform to MSS SP-80 and shall be bronze with rising stem and threaded, solder, or flanged ends. Gate valves 80 mm and larger shall conform to MSS SP-70 and shall be cast iron with bronze trim, outside screw and yoke, and flanged or threaded ends.

2.5.5.2 Globe Valves

Globe valves 65 mm and smaller shall conform to MSS SP-80, bronze, threaded, soldered, or flanged ends. Globe valves 80 mm and larger shall conform to MSS SP-85 and shall be cast iron with bronze trim and flanged, or threaded ends.

2.5.5.3 Check Valves

Check valves 65 mm and smaller shall conform to MSS SP-80 and shall be bronze with threaded, soldered, or flanged ends. Check valves 80 mm and larger shall conform to MSS SP-71 and shall be cast iron with bronze trim and flanged or threaded ends.

2.5.5.4 Angle Valves

Angle valves 65 mm and smaller shall conform to MSS SP-80 and shall be bronze with threaded, soldered, or flanged ends. Angle valves 80 mm and larger shall conform to MSS SP-85 and shall be cast iron with bronze trim and flanged, or threaded ends.

2.5.5.5 Ball Valves

Ball valves 15 mm and larger shall conform to FS WW-V-35, and shall be ductile iron or bronze with threaded, soldered, or flanged ends.

2.5.5.6 Butterfly Valves

Butterfly valves shall be two flange and shall be bubble- tight at 1.03 MPa. Valve bodies shall be cast iron, malleable iron, or steel. ASTM A 167, Type 404 or Type 316, corrosion resisting steel stems, bronze or corrosion resisting steel discs, and synthetic rubber seats shall be provided. Valves smaller than 200 mm shall have throttling handles with a minimum of seven locking positions. Valves 200 mm and larger shall have totally enclosed manual gear operators with adjustable balance return stops and position indicators. Valves in insulated lines shall have extended neck to accommodate insulation thickness.

2.5.5.7 Balancing Valves

Balancing valves 50 mm or smaller shall be bronze with NPT connections for black steel pipe and brazed connections for copper tubing. Valves 25 mm or larger may be all iron with threaded or flanged ends. The valves shall have a square head or similar device and an indicator arc and shall be designed for 120 degrees C. Iron valves shall be lubricated, nonlubricated, or tetrafluoroethylene resin-coated plug valves. In lieu of plug valves, ball valves may be used. Plug valves and ball valves 200 mm or larger shall be provided with manual gear operators with position indicators. Valves shall be selected for the flow required and provided with a permanent nameplate or tag carrying a permanent record of the factory-determined flow rate and flow control pressure levels. Valves shall control the flow within 5 percent of the tag rating. Valves shall be suitable for the maximum operating pressure of 862 kPa or 150 percent of the system operating pressure, whichever is the greater. Where the available system pressure is not adequate to provide the minimum pressure differential that still allows flow control, the system pump head capability shall be appropriately increased. Where flow readings are provided by remote or portable meters, valve bodies shall be provided with tapped openings and pipe extensions with shutoff valves outside of pipe insulation. The pipe extensions shall be provided with quick connecting hose fittings for a portable meter to measure the pressure differential across the automatic flow control valve. A portable meter furnished with accessory kit as recommended by the automatic valve manufacturer shall be provided.

2.5.5.8 Air Vents

Manual air vents shall be brass or bronze valves or cocks suitable for pressure rating of piping system and furnished with threaded plugs or caps.

2.5.6 Strainers

Basket and "Y" type strainers shall be the same size as the pipelines in which they are installed. The strainer bodies shall be fabricated of cast iron with bottoms drilled, and tapped. Strainers shall be designed for 125 psig) and 250 degrees F operating conditions. The bodies shall have arrows clearly cast on the sides indicating the direction of flow. Each strainer shall be equipped with removable cover and sediment screen. The screen shall be made of 0.8 mm brass sheet, Monel, or corrosion-resistant steel, with small perforations numbering not less than 2600 per square cm to provide a net free area through the basket of at least 3.30 times that of the entering pipe. The flow shall be into the screen and out through the perforations.

2.5.7 Chilled Water System Accessories

Chilled water system accessories such as pumps, combination strainer and suction diffusers, and expansion tanks shall be as specified in Section 15650 CENTRAL REFRIGERATED AIR CONDITIONING SYSTEM.

2.5.8 Water Heating System Accessories

Water heating accessories such as expansion tanks shall be as specified in Section 15556 FORCED HOT WATER HEATING SYSTEMS USING HEAT EXCHANGERS.

2.5.9 Glycol

The glycol shall be tested according to ASTM D 1384 and shall cause less than 0.0125 mm penetration per year for all system metals. The glycol shall contain corrosion inhibitors. Silicon based inhibitors shall not be used. The solution shall be compatible with all wetted items within the system.

2.5.10 Backflow Preventers

Backflow preventers shall be according to Section 15400 PLUMBING, GENERAL PURPOSE.

2.5.11 Flexible Pipe Connectors

Flexible pipe connectors shall be designed for 862 kPa or 1034 kPa service as appropriate for the static head plus the system head, and 120 degrees C, 110 degrees C for grooved end flexible connectors. The flexible section shall be constructed of rubber, tetrafluoroethylene resin, or corrosion-resisting steel, bronze, monel, or galvanized steel. The flexible section shall be suitable for intended service with end connections to match adjacent piping. Flanged assemblies shall be equipped with limit bolts to restrict maximum travel to the manufacturer's standard limits. Unless otherwise indicated, the length of the flexible connectors shall be as recommended by the manufacturer for the service intended. Internal sleeves or liners, compatible with circulating medium, shall be provided when recommended by the manufacturer. Covers to protect the bellows shall be provided where indicated.

2.5.12 Pressure Gauges

Gauges shall conform to ASME B40.1 and shall be provided with throttling type needle valve or a pulsation dampener and shut-off valve. Gauge shall be a minimum of 85 mm in diameter and shall have a range from 0 kPa to approximately 1.5 times the maximum system working pressure.

2.5.13 Thermometers

Thermometers shall have brass, malleable iron, or aluminum alloy case and frame, clear protective face, permanently stabilized glass tube with indicating-fluid column, white face, black numbers, and a 225 mm scale, and shall have rigid stems with straight, angular, or inclined pattern.

2.5.14 Escutcheons

Escutcheons shall be chromium-plated iron or chromium-plated brass, either one piece or split pattern, held in place by internal spring tension or setscrews.

2.5.15 Pipe Hangers, Inserts, and Supports

Pipe hangers, inserts, and supports shall conform to MSS SP-58 and MSS SP-69.

2.5.16 Omitted

2.5.17 Insulation

Shop and field applied insulation shall be as specified in Section 15080 THERMAL INSULATION FOR MECHANICAL SYSTEMS.

2.5.18 Condensate Drain Lines

Condensate drainage shall be provided for each item of equipment that generates condensate as specified for drain, waste, and vent piping systems in Section 15400 PLUMBING, GENERAL PURPOSE.

2.6 ELECTRICAL WORK

Electrical motor-driven equipment specified shall be provided complete with motor, motor starter, and controls. Unless otherwise specified, electric equipment, including wiring and motor efficiencies, shall be according to Section 16415 ELECTRICAL WORK, INTERIOR. Electrical characteristics and enclosure type shall be as shown. Unless otherwise indicated, motors of 745 W and above shall be high efficiency type. Motor starters shall be provided complete with thermal overload protection and other appurtenances necessary. Each motor shall be according to NEMA MG 1 and shall be of sufficient size to drive the equipment at the specified capacity without exceeding the nameplate rating of the motor. Manual or automatic control and protective or signal devices required for the operation specified, and any control wiring required for controls and devices, but not shown, shall be provided. Where two-speed or variable-speed motors are indicated, solid-state variable-speed controller may be provided to accomplish the same function. Solid-state variable-speed controllers shall be utilized for motors rated 7.45 kW or less. Adjustable frequency drives shall be used for larger motors.

2.7 CONTROLS

Controls shall be provided as specified in Section 15950 HEATING, VENTILATING AND AIR CONDITIONING (HVAC) CONTROL SYSTEMS.

2.8 DUCTWORK COMPONENTS

2.8.1 Metal Ductwork

All aspects of metal ductwork construction, including all fittings and components, shall comply with SMACNA-06 unless otherwise specified. Elbows shall be radius type with a centerline radius of 1-1/2 times the width or diameter of the duct where space permits. Otherwise, elbows having a minimum radius equal to the width or diameter of the duct or square elbows with factory fabricated turning vanes may be used. Static pressure Class 125, 250, and 500 Pa (1/2, 1, and 2-inch w.g.) ductwork shall meet the requirements of Seal Class C. Class 750 through 2500 Pa shall meet the requirements of Seal Class A. Sealants shall conform to fire hazard classification specified in Section 15080 THERMAL INSULATION FOR MECHANICAL SYSTEMS. Pressure sensitive tape shall not be used as a sealant. Spiral lock seam duct, and flat oval shall be made with duct sealant and locked with not less than 3 equally spaced drive screws or other approved methods indicated in SMACNA-06. The sealant shall be applied to the exposed male part of the fitting collar so that the sealer will be on the inside of the joint and fully protected by the metal of the duct fitting. One brush coat of the sealant shall be applied over the outside of the joint to at least 50 mm band width covering all screw heads and joint gap. Dents in the male portion of the slip fitting collar will not be acceptable. Outdoor air intake ducts and plenums shall be fabricated with watertight soldered or brazed joints and seams.

2.8.1.1 Transitions

Diverging air flow transitions shall be made with each side pitched out a maximum of 15 degrees, for an included angle of 30 degrees. Transitions for converging air flow shall be made with each side pitched in a maximum of 30 degrees, for an included angle of 60 degrees, or shall be as indicated. Factory-fabricated reducing fittings for systems using round duct sections when formed to the shape of the ASME short flow nozzle, need not comply with the maximum angles specified.

2.8.1.2 Metallic Flexible Duct

Metallic type duct shall be single-ply galvanized steel. Duct shall be of corrugated/interlocked, folded and knurled type seam construction, bendable without damage through 180 degrees with a throat radius equal to 1/2 duct diameter. Duct shall conform to UL 181 and shall be rated for positive or negative working pressure of 3.75 kPa at 177 degrees C when duct is aluminum, and 343 degrees C when duct is galvanized steel or stainless steel.

2.8.1.3 Insulated Nonmetallic Flexible Duct Runouts

Flexible duct runouts shall be used only where indicated. Runout length shall be as shown on the drawings, but shall in no case exceed 3 m. Runouts shall be preinsulated, factory fabricated, and shall comply with NFPA 90A and UL 181. Either field or factory applied vapor barrier shall be provided. Where coil induction or high velocity units are supplied with vertical air inlets, a streamlined and vaned and mitered elbow transition piece shall be provided for connection to the flexible duct or hose. The last elbow to these units, other than the vertical air inlet type, shall be a die-stamped elbow and not a flexible connector. Insulated flexible connectors may be used as runouts. The insulated material and vapor barrier shall conform to the requirements of Section 15080 THERMAL INSULATION FOR MECHANICAL SYSTEMS. The insulation material surface shall not be exposed to the air stream.

2.8.1.4 General Service Duct Connectors

A flexible duct connector approximately 150 mm in width shall be provided where sheet metal connections are made to fans or where ducts of dissimilar metals are connected. For round/oval ducts, the flexible material shall be secured by stainless steel or zinc-coated, iron clinch-type draw bands. For rectangular ducts, the flexible material locked to metal collars shall be installed using normal duct construction methods. The composite connector system shall comply with UL 214 and be classified as "flame-retarded fabrics" in UL-01.

2.8.1.5 High Temperature Service Duct Connections

Material shall be approximately 2.38 mm thick, 1.2 to 1.36 kg per square weight, plain weave fibrous glass cloth with, nickel/chrome wire reinforcement for service in excess of 650 degrees C.

2.8.2 Omitted

2.8.3 Ductwork Accessories

2.8.3.1 Duct Access Doors

Access doors shall be provided in ductwork and plenums where indicated and at all air flow measuring primaries, automatic dampers, fire dampers, coils, thermostats, and other apparatus requiring service and inspection in the duct system, and unless otherwise shown, shall conform to SMACNA-06. Access doors shall be provided upstream and downstream of air flow measuring primaries and heating and cooling coils. Doors shall be minimum 375 by 450 mm, unless otherwise shown. Where duct size will not accommodate this size door, the doors shall be made as large as practicable. Doors 600 by 600 mm or larger shall be provided with fasteners operable from both sides. Doors in insulated ducts shall be the insulated type.

2.8.3.2 Fire Dampers

Fire dampers shall be 1-1/2 hour fire rated unless otherwise indicated. Fire dampers shall conform to the requirements of NFPA 90A and UL 555. Fire dampers shall be automatic operating type and shall have a dynamic rating suitable for the maximum air velocity and pressure differential to which it will be subjected. Fire dampers shall be approved for the specific application, and shall be installed according to their listing. Fire dampers shall be equipped with a steel sleeve or adequately sized frame installed in such a manner that disruption of the attached ductwork, if any, will not impair the operation of the damper. Sleeves or frames shall be equipped with perimeter mounting angles attached on both sides of the wall or floor opening. Ductwork in fire-rated floor-ceiling or roof-ceiling assembly systems with air ducts that pierce the ceiling of the assemblies shall be constructed in conformance with UL-05. Fire dampers shall be curtain type with damper blades out of the air stream. Dampers shall not reduce the duct or the air transfer opening cross-sectional area. Dampers shall be installed so that the centerline of the damper depth or thickness is located in the centerline of the wall, partition or floor slab depth or thickness. Unless otherwise indicated, the installation details given in SMACNA-05 and in manufacturer's instructions for fire dampers shall be followed.

2.8.3.3 Splitters and Manual Balancing Dampers

Splitters and manual balancing dampers shall be furnished with accessible operating mechanisms. Where operators occur in finished portions of the building, operators shall be chromium plated with all exposed edges rounded. Splitters shall be operated by quadrant operators or 5 mm rod brought through the side of the duct with locking setscrew and bushing. Two rods are required on splitters over 200 mm. Manual volume control dampers shall be operated by locking-type quadrant operators. Dampers and splitters shall be 2 gauges heavier than the duct in which installed. Unless otherwise indicated, multileaf dampers shall be opposed blade type with maximum blade width of 300 mm. Access doors or panels shall be provided for all concealed damper operators and locking setscrews. Unless otherwise indicated, the locking-type quadrant operators for dampers, when installed on ducts to be thermally insulated, shall be provided with stand-off mounting brackets, bases, or adapters to provide clearance between the duct surface and the operator not less than the thickness of the insulation. Stand-off mounting items shall be integral with the operator or standard accessory of the damper manufacturer. Volume dampers shall be provided where indicated.

2.8.3.4 Air Deflectors and Branch Connections

Air deflectors shall be provided at duct mounted supply outlets, at takeoff or extension collars to supply outlets, at duct branch takeoff connections, and at 90 degree elbows, as well as at locations as indicated on the drawings or otherwise specified. Conical branch connections or 45-degree entry connections may be used in lieu of deflectors or extractors for branch connections. All air deflectors, except those installed in 90-degree elbows, shall be provided with an approved means of adjustment. Adjustment shall be made from easily accessible means inside the duct or from an adjustment with sturdy lock on the face of the duct. When installed on ducts to be thermally insulated, external adjustments shall be provided with stand-off mounting brackets, integral with the adjustment device, to provide clearance between the duct surface and the adjustment device not less than the thickness of the thermal insulation. Air deflectors shall be factory-fabricated units consisting of curved turning vanes or louver blades designed to provide uniform air distribution and change of direction with minimum turbulence or pressure loss. Air deflectors shall be factory or field assembled. Blade air deflectors, also called blade air extractors, shall be approved factory fabricated units consisting of equalizing grid and adjustable blade and lock. Adjustment shall be easily made from the face of the diffuser or by position adjustment and lock external to the duct. Stand-off brackets shall be provided on insulated ducts and are described herein. Fixed air deflectors, also called turning vanes, shall be provided in 90-degree elbows.

2.8.4 Duct Sleeves, Framed Prepared Openings, Closure Collars

2.8.4.1 Duct Sleeves

Duct sleeves shall be provided for round ducts 375 mm in diameter or less passing through floors, walls, ceilings, or roof, and installed during construction of the floor, wall, ceiling, or roof. Round ducts larger than 375 mm in diameter and square, rectangular, and oval ducts passing through floors, walls, ceilings, or roof shall be installed through framed prepared openings. The Contractor shall be responsible for the proper size and location of sleeves and prepared openings. Sleeves and framed openings are also required where grilles, registers, and diffusers are installed at the openings. Framed prepared openings shall be fabricated from 1.0 mm galvanized steel, unless otherwise indicated. Where sleeves are installed in bearing walls or partitions, black steel pipe, ASTM A 53, Schedule 20 shall be used. Sleeve shall provide 25 mm clearance between the duct and the sleeve or 25 mm clearance between the insulation and the sleeve for insulated ducts.

2.8.4.2 Framed Prepared Openings

Openings shall have 25 mm clearance between the duct and the opening or 25 mm clearance between the insulation and the opening for insulated ducts.

2.8.4.3 Closure Collars

Collars shall be fabricated of galvanized sheet metal not less than 100 mm wide, unless otherwise indicated, and shall be installed on exposed ducts on each side of walls or floors where sleeves or prepared openings are provided. Collars shall be installed tight against surfaces. Collars shall fit snugly around the duct or insulation. Sharp edges of the collar around insulated duct shall be ground smooth to preclude tearing or puncturing the insulation covering or vapor barrier. Collars for round ducts 375 mm in diameter or less shall be fabricated from 1.0 mm galvanized steel. Collars for round ducts larger than 375 mm and square, and rectangular ducts shall be fabricated from 1.3 mm galvanized steel. Collars shall be installed with fasteners on maximum 150 mm centers, except that not less than four fasteners shall be used.

2.8.5 Omitted

2.8.6 Omitted

2.8.7 Diffusers, Registers, and Grilles

Units shall be factory-fabricated of steel, corrosion-resistant steel, or aluminum and shall distribute the specified quantity of air evenly over space intended without causing noticeable drafts, air movement faster than 0.25 m/s in occupied zone, or dead spots anywhere in the conditioned area. Outlets for diffusion, spread, throw, and noise level shall be as required for specified performance. Performance shall be certified according to ADC 1062:GRD. Inlets and outlets shall be sound rated and certified according to ADC 1062:GRD. Sound power level shall be as indicated. Diffusers and registers shall be provided with volume damper with accessible operator, unless otherwise indicated; or if standard with the manufacturer, an automatically controlled device will be acceptable. Volume dampers shall be opposed blade type for all diffusers and registers, except linear slot diffusers. Linear slot diffusers shall be provided with round or elliptical balancing dampers. Where the inlet and outlet openings are located less than 2 m above the floor, they shall be protected by a grille or screen according to NFPA 90A.

2.8.7.1 Diffusers

Diffuser types shall be as indicated. Ceiling mounted units shall be furnished with anti-smudge devices, unless the diffuser unit minimizes ceiling smudging through design features. Diffusers shall be provided with air deflectors of the type indicated. Air handling troffers or combination light and ceiling diffusers shall conform to the requirements of UL-03 for the interchangeable use as cooled or heated air supply diffusers or return air units. Ceiling mounted units shall be installed with rims tight against ceiling. Sponge rubber gaskets shall be provided between ceiling and surface mounted diffusers for air leakage control. Suitable trim shall be provided for flush mounted diffusers. Duct collar connecting the duct to diffuser shall be airtight and shall not interfere with volume controller. Return or exhaust units shall be similar to supply diffusers.

2.8.7.2 Registers and Grilles

Units shall be four-way directional-control type, except that return and exhaust registers may be fixed horizontal or vertical louver type similar in appearance to the supply register face. Registers shall be provided with sponge-rubber gasket between flanges and wall or ceiling. Wall supply registers shall be installed at least 150 mm below the ceiling unless otherwise indicated. Return and exhaust registers shall be located 150 mm above the floor unless otherwise indicated. Four-way directional control may be achieved by a grille face which can be rotated in four positions or by adjustment of horizontal and vertical vanes. Grilles shall be as specified for registers, without volume control damper.

2.8.8 Louvers

Louvers for installation in exterior walls which are associated with the air supply and distribution system shall be as specified in Section 07600 SHEET METALWORK, GENERAL.

2.8.9 Air Vents, Penthouses, and Goosenecks

Air vents, penthouses, and goosenecks shall be fabricated from galvanized steel sheets with galvanized structural shapes. Sheet metal thickness, reinforcement, and fabrication shall conform to SMACNA-06. Louver blades shall be accurately fitted and secured to frames. Edges of louver blades shall be folded or beaded for rigidity and baffled to exclude driving rain. Air vents, penthouses, and goosenecks shall be provided with bird screen.

2.8.10 Bird Screens and Frames

Bird screens shall conform to ASTM E 437, Type I, Class 1, 2 by 2 mesh, 1.6 mm diameter aluminum wire or 0.8 mm diameter stainless steel wire. Frames shall be removable type or stainless steel or extruded aluminum.

2.9 AIR SYSTEMS EQUIPMENT

2.9.1 Fans

Fans shall be tested and rated according to AMCA 210. Fans may be connected to the motors either directly or indirectly with V-belt drive. V-belt drives shall be designed for not less than 150 percent of the connected driving capacity. Motor sheaves shall be variable pitch for 11 kW and below and fixed pitch as defined by ARI Guideline D. Variable pitch sheaves shall be selected to drive the fan at a speed which will

produce the specified capacity when set at the approximate midpoint of the sheave adjustment. When fixed pitch sheaves are furnished, a replaceable sheave shall be provided when needed to achieve system air balance. Motors for V-belt drives shall be provided with adjustable rails or bases. Removable metal guards shall be provided for all exposed V-belt drives, and speed-test openings shall be provided at the center of all rotating shafts. Fans shall be provided with personnel screens or guards on both suction and supply ends, except that the screens need not be provided, unless otherwise indicated, where ducts are connected to the fan. Fan and motor assemblies shall be provided with vibration-isolation supports or mountings as indicated. Vibration-isolation units shall be standard products with published loading ratings. Each fan shall be selected to produce the capacity required at the fan static pressure indicated. Sound power level shall be as indicated. The sound power level values shall be obtained according to AMCA 300. Standard AMCA arrangement, rotation, and discharge shall be as indicated.

2.9.1.1 Centrifugal Fans

Centrifugal fans shall be fully enclosed, single-width single-inlet, or double-width double-inlet, AMCA Pressure Class I, II, or III as required or indicated for the design system pressure. Impeller wheels shall be rigidly constructed, accurately balanced both statically and dynamically. Fan blades may be forward curved, backward-inclined or airfoil design in wheel sizes up to 750 mm. Fan blades for wheels over 750 mm in diameter shall be backward-inclined or airfoil design. Fan wheels over 900 mm in diameter shall have overhung pulleys and a bearing on each side of the wheel. Fan wheels 900 mm or less in diameter may have one or more extra long bearings between the fan wheel and the drive. Bearings shall be sleeve type, self-aligning and self-oiling with oil reservoirs, or precision self-aligning roller or ball-type with accessible grease fittings or permanently lubricated type. Grease fittings shall be connected to tubing and serviceable from a single accessible point. Bearing life shall be L50 rated at not less than 200,000 hours as defined by ABEMA 9 and ABEMA 11. Fan shafts shall be steel, accurately finished, and shall be provided with key seats and keys for impeller hubs and fan pulleys. Each fan outlet shall be of ample proportions and shall be designed for the attachment of angles and bolts for attaching flexible connections. Automatically operated inlet vanes shall be provided on suction inlets where indicated. Motors, unless otherwise indicated, shall not exceed 1,800 rpm and shall have totally enclosed enclosures. Motor starters shall be magnetic across-the-line type with general-purpose enclosure.

2.9.1.2 In-Line Centrifugal Fans

In-line fans shall have centrifugal backward inclined blades, stationary discharge conversion vanes, internal and external belt guards, and adjustable motor mounts. Fans shall be mounted in a welded tubular casing. Air shall enter and leave the fan axially. Inlets shall be streamlined with conversion vanes to eliminate turbulence and provide smooth discharge air flow. Fan bearings and drive shafts shall be enclosed and isolated from the air stream. Fan bearings shall be sealed against dust and dirt and shall be permanently lubricated, and shall be precision self aligning ball or roller type. Bearing life shall be L50 rated at not less than 200,000 hours as defined by ABEMA 9 and ABEMA 11. Motors shall have totally enclosed enclosure. Motor starters shall be magnetic across-the-line with general-purpose enclosures.

2.9.1.3 Axial Flow Fans

Axial flow fans shall be complete with drive components and belt guard, and shall have a steel housing, cast fan wheel, cast or welded steel diffusers, fan shaft, bearings, and mounting frame as a factory-assembled unit. Fan wheels shall have radially projecting blades of airfoil cross section and shall be dynamically balanced and keyed to the fan shaft. Fan bearings and drive shafts shall be enclosed and isolated from the air stream. Fan bearings shall be sealed against dust and dirt, shall be permanently lubricated or with

accessible grease fittings, and shall be precision self-aligning ball or roller type. Bearing life shall be L50 rated at not less than 200,000 hours of operation as defined by ABEMA 9 and ABEMA 11. Fan inlets shall be provided with an aerodynamically shaped bell and an inlet cone. Diffuser or straightening vanes shall be provided at the fan discharge to minimize turbulence and provide smooth discharge air flow. Fan unit shall be provided with inlet and outlet flanges, duct equalizer section, and where indicated automatic operation adjustable inlet vanes. Unless otherwise indicated, motors shall not exceed 1,800 rpm and shall have totally enclosed enclosure. Motor starters shall be magnetic across-the-line with general-purpose enclosure.

2.9.1.4 Panel Type Power Wall Ventilators

Fans shall be propeller type, assembled on a reinforced metal panel with venturi opening spun into panel. Fans with wheels less than 600 mm diameter shall be direct or V-belt driven and fans with wheels 600 mm diameter and larger shall be V-belt drive type. Fans shall be furnished with wall mounting collar. Lubricated bearings shall be provided. Fans shall be fitted with wheel and motor side metal or wire guards which have a corrosion-resistant finish. Motor enclosure shall be totally enclosed fan cooled type. Gravity and motor operated backdraft dampers shall be provided where indicated.

2.9.1.5 Centrifugal Type Power Wall Ventilators

Fans shall be direct or V-belt driven centrifugal type with backward inclined, non-overloading wheel. Motor housing shall be removable and weatherproof. Unit housing shall be designed for sealing to building surface and for discharge and condensate drippage away from building surface. Housing shall be constructed of heavy gauge aluminum. Unit shall be fitted with an aluminum or plated steel wire discharge bird screen, manufacturer's standard gravity or motor-operated damper, an airtight and liquid-tight metallic wall sleeve. Motor enclosure shall be totally enclosed fan cooled type. Lubricated bearings shall be provided.

2.9.1.6 Centrifugal Type Power Roof Ventilators

Fans shall be direct or V-belt driven with backward inclined, non-overloading wheel. Motor compartment housing shall be hinged or removable and weatherproof, constructed of heavy gauge aluminum. Fans shall be provided with birdscreen, disconnect switch, gravity or motorized dampers, where indicated, sound curb, roof curb, and extended base. Motors enclosure shall be dripproof type. Grease-laden kitchen exhaust fans shall be centrifugal type according to UL 705 and fitted with V-belt drive, round hood, and windband upblast discharge configuration, integral residue trough and collection device, motor and power transmission components located in outside positively air ventilated compartment. Lubricated bearings shall be provided.

2.9.1.7 Propeller Type Power Roof Ventilators

Fans shall be direct or V-belt driven. Fan housing shall be hinged or removable weathertight, fitted with framed rectangular base constructed of aluminum or galvanized steel. Motors shall be totally enclosed fan cooled type. Motors shall be provided with nonfusible, horsepower rated, manual disconnect mount on unit. Fans shall be provided with gravity or motor operated dampers, birdscreen, sound curb, or roof curb. Lubricated bearings shall be provided.

2.9.2 Omitted

2.9.3 Air Filters

Air filters shall be listed according to requirements of UL 900, except high efficiency particulate air filters of 99.97 percent efficiency by the DOP Test method shall be as listed under the Label Service and shall meet the requirements of UL 586.

2.9.3.1 Extended Surface Pleated Panel Filters

Filters shall be 50 mm depth, sectional, disposable type of the size indicated and shall have an average efficiency of 25 to 30 percent when tested according to ASHRAE 52.1. Initial resistance at 2.54 m/s shall not exceed 9 mm water gauge. Filters shall be UL Class 2. Media shall be nonwoven cotton and synthetic fiber mat. A wire support grid bonded to the media shall be attached to a moisture resistant fiberboard frame. All four edges of the filter media shall be bonded to the inside of the frame to prevent air bypass and increase rigidity.

2.9.3.2 Extended Surface Nonsupported Pocket Filters

Filters shall be 30-inch depth, sectional, replaceable dry media type of the size indicated and shall have an average efficiency of 80 to 85 percent when tested according to ASHRAE 52.1. Initial resistance at 500 feet per minute shall not exceed 0.45 inch water gauge. Filters shall be UL Class 1. Media shall be fibrous glass, supported in the air stream by a wire or non-woven synthetic backing and secured to a galvanized steel metal header. Pockets shall not sag or flap at anticipated air flows. Each filter shall be installed with an extended surface pleated panel filter as a prefilter in a factory preassembled, side access housing or a factory-made sectional frame bank, as indicated.

2.9.3.3 Omitted

2.9.3.4 Replaceable Media Filters

Replaceable media filters shall be the dry-media type, of the size required to suit the application. Filtering media shall be not less than 50 mm thick fibrous glass media pad supported by a structural wire grid or woven wire mesh. Pad shall be enclosed in a holding frame of not less than 1.6 mm galvanized steel, and equipped with quick-opening mechanism for changing filter media. The air flow capacity of the filter shall be based on net filter face velocity not exceeding 300 feet per minute, with initial resistance of 0.13 inch water gauge. Average efficiency shall be not less than 25 percent when tested according to ASHRAE 52.1.

2.9.3.5 Omitted

2.9.3.6 Omitted

2.9.3.7 Omitted

2.9.3.8 Omitted

2.9.3.9 Holding Frames

Frames shall be fabricated from not lighter than 1.6 mm sheet steel with rust-inhibitor coating. Each holding frame shall be equipped with suitable filter holding devices. Holding frame seats shall be gasketed. All joints shall be airtight.

2.9.3.10 Filter Gauges

Filter gauges shall be dial type, diaphragm actuated draft and shall be provided for all filter stations, including those filters which are furnished as integral parts of factory fabricated air handling units. Gauges shall be at least 98 mm in diameter, shall have white dials with black figures, and graduations shall be graduated in 0.25 mm, and shall have a minimum range of 25 mm beyond the specified final resistance for the filter bank on which each gauge is applied. Each gauge shall incorporate a screw operated zero adjustment and shall be furnished complete with two static pressure tips with integral compression fittings, two molded plastic vent valves, two 1.5 m minimum lengths of 6.35 mm diameter aluminum tubing, and all hardware and accessories for gauge mounting.

2.10 AIR HANDLING UNITS

2.10.1 Field-Fabricated Air Handling Units

Built-up units shall be as specified in paragraph DUCTWORK COMPONENTS. Fans, coils spray-coil dehumidifiers, and air filters shall be as specified in paragraph AIR SYSTEMS EQUIPMENT for types indicated.

2.10.2 Factory-Fabricated Air Handling Units

Units shall be single-zone draw-through type or single-zone blow-through type as indicated. Units shall include fans, coils, airtight insulated casing, prefilters, secondary filter sections, adjustable V-belt drives, belt guards for externally mounted motors, access sections where indicated, mixing box combination sectional filter-mixing box, vibration-isolators, and appurtenances required for specified operation. Vibration isolators shall be as indicated. Each air handling unit shall have physical dimensions suitable to fit space allotted to the unit and shall have the capacity indicated. Air handling unit shall have published ratings based on tests performed according to ARI 430.

2.10.2.1 Casings

Casing sections shall be 2-inch double wall type, constructed of a minimum 18 gauge galvanized steel, or 18 gauge steel outer casing protected with a corrosion resistant paint finish according to paragraph FACTORY PAINTING. Inner casing of double-wall units shall be minimum 1.0 mm (20 gauge) solid galvanized steel. Casing shall be designed and constructed with an integral structural steel frame such that exterior panels are non-load bearing. Exterior panels shall be individually removable. Removal shall not affect the structural integrity of the unit. Casings shall be provided with inspection doors, access sections, and access doors as indicated. Inspection and access doors shall be insulated, fully gasketed, double-wall type, of a minimum 1.3 mm outer and 1.0 mm inner panels. Doors shall be rigid and provided with heavy duty hinges and latches. Inspection doors shall be a minimum 300 mm wide by 300 mm high. Access doors shall be minimum 600 mm wide and shall be the full height of the unit casing or a minimum of 1800 mm, whichever is less. Access sections shall be according to paragraph AIR HANDLING UNITS. Drain pan shall be double-bottom type constructed of 16 gauge galvanized steel, pitched to the drain connection. Drain pans shall be constructed watertight, treated to prevent corrosion, and designed for positive condensate drainage. When two or more cooling coils are used, with one stacked above the other, condensate from the upper coils shall not flow across the face of lower coils. Intermediate drain pans or condensate collection channels and downspouts shall be provided, as required to carry condensate to the unit drain pan out of the air stream and without moisture carryover. Each casing section handling conditioned air shall be insulated with not less than 25 mm thick, 24 kg per cubic meter coated fibrous glass material having a thermal conductivity not greater than 0.033 W/m-K(0.23 Btu/hr-sf-F). Factory applied fibrous glass insulation shall conform to

ASTM C 1071, except that the minimum thickness and density requirements do not apply, and shall meet the requirements of NFPA 90A. Foam-type insulation is not acceptable. Foil-faced insulation shall not be an acceptable substitute for use on double-wall access doors and inspections doors and casing sections. Duct liner material, coating, and adhesive shall conform to fire-hazard requirements specified in Section 15080 THERMAL INSULATION FOR MECHANICAL SYSTEMS. Exposed insulation edges and joints where insulation panels are butted together shall be protected with a metal nosing strip or shall be coated to conform to meet erosion resistance requirements of ASTM C 107. A latched and hinged inspection door, shall be provided in the fan and coil sections. Additional inspection doors, access doors and access sections shall be provided where indicated.

2.10.2.2 Heating and Cooling Coils

Coils shall be provided as specified in paragraph AIR SYSTEMS EQUIPMENT, for types indicated.

2.10.2.3 Omitted

2.10.2.4 Air Filters

Air filters shall be as specified in paragraph AIR SYSTEMS EQUIPMENT for types and thickness indicated.

2.10.2.5 Fans

Fans shall be double-inlet, centrifugal type with each fan in a separate scroll. Fans and shafts shall be dynamically balanced prior to installation into air handling unit, then the entire fan assembly shall be statically and dynamically balanced at the factory after it has been installed in the air handling unit. Fans shall be mounted on steel shafts accurately ground and finished. Fan bearings shall be sealed against dust and dirt and shall be precision self-aligning ball or roller type. Bearing life shall be L50 rated at not less than 200,000 hours as defined by ABEMA 9 and ABEMA 11. Bearings shall be permanently lubricated or lubricated type with lubrication fittings readily accessible at the drive side of the unit. Bearings shall be supported by structural shapes, or die formed sheet structural members, or support plates securely attached to the unit casing. Bearings may not be fastened directly to the unit sheet metal casing. Fans and scrolls shall be furnished with coating indicated. Fans shall be driven by a unit-mounted or a floor- mounted motor connected to fans by V-belt drive complete with belt guard for externally mounted motors. Belt guards shall be the three sided enclosed type with solid or expanded metal face. Belt drives shall be designed for not less than a 1.3 service factor based on motor nameplate rating. Motor sheaves shall be variable pitch for 20 kW and below and fixed pitch above 20 kW as defined by ARI Guideline D. Where fixed sheaves are required, variable pitch sheaves may be used during air balance, but shall be replaced with an appropriate fixed sheave after air balance is completed. Variable pitch sheaves shall be selected to drive the fan at a speed that will produce the specified capacity when set at the approximate midpoint of the sheave adjustment. Motors for V-belt drives shall be provided with adjustable bases. Fan motors shall have totally enclosed] enclosures. Motor starters shall be magnetic across-the-line type with general-purpose enclosure. Unit fan or fans shall be selected to produce the required capacity at the fan static pressure. Sound power level shall be as indicated. The sound power level values shall be obtained according to AMCA 300 or ASHRAE 68.

2.10.2.6 Access Sections and Filter/Mixing Boxes

Access sections shall be provided where indicated and shall be furnished with access doors as shown. Access sections and filter/mixing boxes shall be constructed in a manner identical to the remainder of the

unit casing and shall be equipped with access doors. Mixing boxes shall be designed to minimize air stratification and to promote thorough mixing of the air streams.

2.10.2.7 Omitted

2.10.2.8 Dampers

Dampers shall be as specified in paragraph CONTROLS.

2.11 TERMINAL UNITS

2.11.1 Room Fan-Coil Units

Base units shall include galvanized coil casing, coil assembly drain pan valve and piping package, outside air damper, air filter, fans, motor, fan drive, and motor switch, plus an enclosure for cabinet models and casing for concealed models. Leveling devices integral with the unit shall be provided for vertical type units. Sound power levels shall not exceed NC value of 35. Sound power level data or values for these units shall be obtained according to test procedures based on ARI 350. Sound power values apply to units provided with factory fabricated cabinet enclosures and standard grilles. Values obtained for the standard cabinet models will be acceptable for concealed models without separate test provided there is no variation between models as to the coil configuration, blowers, motor speeds, or relative arrangement of parts. Automatic valves and controls shall be provided as specified in paragraph CONTROLS. Each unit shall be fastened securely to the building structure. Capacity of the units shall be as indicated. Room fan-coil units shall be certified as complying with ARI 440, and shall meet the requirements of UL 1995.

2.11.1.1 Enclosures

Enclosures shall be fabricated of not lighter than 1.3 mm steel, reinforced and braced. Front panels of enclosures shall be removable and provided with 13 mm thick dual density fibrous glass insulation. The exposed side shall be high density, erosion-proof material suitable for use in air streams with velocities up to 23 m/s . Discharge grille shall be adjustable and shall be of such design as to properly distribute air throughout the conditioned space. Plastic discharge and return grilles are acceptable provided the plastic material is certified by the manufacturer to be classified as flame resistant according to UL 94 and the material shall comply with the heat deflection criteria specified in UL 1995. Ferrous metal surfaces shall be galvanized or factory finished with corrosion resistant enamel. Access doors or removable panels shall be provided for piping and control compartments. Duct discharge collar shall be provided for concealed models. Enclosures shall have easy access for filter replacement.

2.11.1.2 Fans

Fans shall be galvanized steel or aluminum, multiblade, centrifugal type. In lieu of metal, fans and scrolls may be non-metallic materials of suitably reinforced compounds. Fans shall be dynamically and statically balanced. Surfaces shall be smooth. Assemblies shall be accessible for maintenance. Disassembly and re-assembly shall be by means of mechanical fastening devices and not by epoxies or cements.

2.11.1.3 Coils

Coils shall be constructed of not less than 10 mm outside diameter seamless copper tubing, with copper or aluminum fins mechanically bonded or soldered to the tubes. Coils shall be provided with not less than

12 mm outside diameter flare or sweat connectors, accessory piping package with thermal connections suitable for connection to the type of control valve supplied, and manual air vent. Coils shall be tested hydrostatically at 2000 kPa or under water at 1700 kPa air pressure and suitable for 1400 kPa working pressure. Provisions shall be made for coil removal.

2.11.1.4 Drain Pans

Drain and drip pans shall be sized and located to collect all water condensed on and dripping from any item within the unit enclosure or casing. Drain pans shall be constructed of not lighter than 0.9 mm steel, galvanized after fabrication, thermally insulated to prevent condensation. Insulation shall have a flame spread rating not over 25 without evidence of continued progressive combustion, a smoke developed rating no higher than 50, and shall be of a waterproof type or coated with a waterproofing material. In lieu of the above, drain pans may be constructed of die-formed 0.85 mm steel, formed from a single sheet, galvanized after fabrication, insulated and coated as specified for the 0.9 mm material or of die-formed 0.9 mm type 304 stainless steel, insulated as specified above. Drain pans shall be pitched to drain. Minimum 20 mm NPT or 15 mm OD drain connection shall be provided in drain pan. Auxiliary drain pans to catch drips from control and piping packages, eliminating insulation of the packages, may be plastic; if metal, the auxiliary pans shall comply with the requirements specified above. Insulation at control and piping connections thereto shall extend 25 mm minimum over the auxiliary drain pan.

2.11.1.5 Manually Operated Outside Air Dampers

Manually operated outside air dampers shall be provided according to the arrangement indicated. Dampers shall be parallel airfoil type and of galvanized construction. Blades shall rotate on stainless steel or nylon sleeve bearings.

2.11.1.6 Filters

Filters shall be of the fiberglass disposable type, 25 mm thick, conforming to CID A-A-1419. Filters in each unit shall be removable without the use of tools.

2.11.1.7 Motors

Motors shall be of the permanent split-capacitor type with built-in thermal overload protection, directly connected to unit fans. Motor switch shall be two or three speeds and off, manually operated, and shall be mounted on an identified plate adjacent to the room thermostat. In lieu of the above fan speed control, a solid-state variable-speed controller having a minimum speed reduction of 50 percent may be provided. Motors shall have permanently- lubricated or oilable sleeve-type or combination ball and sleeve-type bearings with vibration isolating mountings suitable for continuous duty. Motor power consumption, shown in watts, at the fan operating speed selected to meet the specified capacity shall not exceed the following values:

Unit Capacity (L/s)	Maximum Power Consumption (Watts)
94	55
142	60
189	65
283	80
378	130
472	130
566	130

Unit Capacity (cfm)	Maximum Power Consumption (Watts)
200	55
300	60
400	65
600	80
800	130
1000	130
1200	130

2.12 OMITTED

2.13 FACTORY PAINTING

Units which are not of galvanized construction according to ASTM A 123 or ASTM A 525 shall be factory painted with a corrosion resisting paint finish. Internal and external ferrous metal surfaces shall be cleaned, phosphatised and coated with a paint finish which has been tested according to ASTM B 117, ASTM D 1654, and ASTM D 3359. Evidence of satisfactory paint performance for a minimum of 125 hours for units to be installed indoors and 500 hours for units to be installed outdoors shall be submitted. Rating of failure at the scribe mark shall be not less than 6, average creepage not greater than 3 mm. Rating of the inscribed area shall not be less than 10, no failure. On units constructed of galvanized steel which have been welded, exterior surfaces of welds or welds that have burned through from the interior shall receive a final shop docket of zinc-rich protective paint according to ASTM D 520 Type I.

PART 3 EXECUTION

3.1 INSTALLATION

Work shall be installed as shown and according to the manufacturer's diagrams and recommendations.

3.1.1 Piping

Pipe and fitting installation shall conform to the requirements of ASME B31.1. Pipe shall be cut accurately to measurements established at the jobsite, and worked into place without springing or forcing, completely clearing all windows, doors, and other openings. Cutting or other weakening of the building structure to facilitate piping installation will not be permitted without written approval. Pipe or tubing shall be cut square, shall have burrs removed by reaming, and shall permit free expansion and contraction without causing damage to the building structure, pipe, joints, or hangers. Changes in direction shall be made with fittings, except that bending of pipe 100 mm and smaller will be permitted, provided a pipe bender is used

and wide sweep bends are formed. The centerline radius of bends shall not be less than six diameters of the pipe. Bent pipe showing kinks, wrinkles, flattening, or other malformations will not be accepted. Horizontal supply mains shall pitch down in the direction of flow as indicated. The grade shall be not less than 2 mm in 1 m. Reducing fittings shall be used for changes in pipe sizes. Open ends of pipelines and equipment shall be capped or plugged during installation to keep dirt or other foreign materials out of the system. Pipe not otherwise specified shall be uncoated. Connections to appliances shall be made with malleable iron unions for steel pipe 65 mm or less in diameter, and with flanges for pipe 80 mm and larger. Connections between ferrous and copper piping shall be electrically isolated from each other with dielectric unions or flanges. All piping located in air plenums shall conform to NFPA 90A requirements. Pipe and fittings installed in inaccessible conduits or trenches under concrete floor slabs shall be welded.

3.1.1.1 Joints

a. Threaded Joints: Threaded joints shall be made with tapered threads and made tight with a stiff mixture of graphite and oil or polytetrafluoroethylene tape or equivalent thread joint compound or material, applied to the male threads only.

b. Soldered Joints: Joints in copper tubing shall be cut square with ends reamed, and all filings and dust wiped from interior of pipe. Joints shall be soldered with 95/5 solder or brazed with silver solder applied and drawn through the full fitting length. Care shall be taken to prevent annealing of tube or fittings when making connections. Joints 65 mm and larger shall be made with heat uniformly around the entire circumference of the joint with a multi-flame torch. Connections in floor slabs shall be brazed. Excess solder shall be wiped from joint before solder hardens.

c. Welded Joints: Welding shall be according to qualified procedures using qualified welders and welding operators. Procedures and welders shall be qualified according to ASME BPV IX. Welding procedures qualified by others and welders and welding operators qualified by another operator may be permitted by ASME B31.1. Structural members shall be welded according to Section 05055 WELDING, STRUCTURAL. All welds shall be permanently identified by imprinting the welder's or welding operator's assigned symbol adjacent to the weld. Welded joints shall be fusion welded unless otherwise required. Changes in direction of piping shall be made with welding fittings only; mitering or notching pipe to form elbows and tees or other similar type construction will not be permitted. Branch connections may be made with either welding tees or branch outlet fittings. Branch outlet fittings shall be forged, flared for improvement of flow where attached to the run, and reinforced against external strains. Beveling, alignment, heat treatment and inspection of weld shall conform to ASME B31.1. Weld defects shall be removed and repairs made to the weld, or the weld joints shall be entirely removed and rewelded. Electrodes shall be stored and dried according to AWS D1.1 or as recommended by the manufacturer. Electrodes that have been wetted or that have lost any of their coating shall not be used.

3.1.1.2 Grooved Mechanical Joints

Grooves shall be prepared according to the coupling manufacturer's instructions. Pipe and groove dimensions shall comply with the tolerances specified by the coupling manufacturer. The diameter of grooves made in the field shall be measured using a "go/no-go" gauge, vernier or dial caliper, or narrow-land micrometer. Groove width and dimension of groove from end of pipe shall be measured and recorded for each change in grooving tool setup to verify compliance with coupling manufacturer's tolerances. Grooved joints shall not be used in concealed locations.

3.1.1.3 Flanges and Unions

Except where copper tubing is used, union or flanged joints shall be provided in each line immediately preceding the connection to each piece of equipment or material requiring maintenance such as coils, pumps, control valves, and other similar items.

3.1.2 Supports

3.1.2.1 General

Hangers used to support piping 50 mm and larger shall be fabricated to permit adequate adjustment after erection while still supporting the load. Pipe guides and anchors shall be installed to keep pipes in accurate alignment, to direct the expansion movement, and to prevent buckling, swaying, and undue strain. Piping subjected to vertical movement when operating temperatures exceed ambient temperatures shall be supported by variable spring hangers and supports or by constant support hangers.

3.1.2.2 Seismic Requirements (Pipe Supports and Structural Bracing)

Piping and attached valves shall be supported and braced to resist seismic loads as specified under Section 13080 SEISMIC PROTECTION FOR MECHANICAL, ELECTRICAL EQUIPMENT. Structural steel required for reinforcement to properly support piping, headers, and equipment but not shown shall be provided under this section. Material used for support shall be as specified under Section 05210 STEEL JOISTS.

3.1.2.3 Pipe Hangers, Inserts and Supports

Pipe hangers, inserts, and supports shall conform to MSS SP-58 and MSS SP-69, except as modified herein. Types 5, 12, and 26 shall not be used.

a. Hangers: Type 3 shall not be used on insulated piping.

b. Inserts: Type 18 inserts shall be secured to concrete forms before concrete is placed. Continuous inserts which allow more adjustment may be used if they otherwise meet the requirements for Type 18 inserts.

c. C-Clamps: Type 19 and 23 C-clamps shall be torqued per MSS SP-69 and have both locknuts and retaining devices, furnished by the manufacturer. Field-fabricated C-clamp bodies or retaining devices are not acceptable.

d. Angle Attachments: Type 20 attachments used on angles and channels shall be furnished with an added malleable-iron heel plate or adapter.

e. Hangers: Type 24 may be used only on trapeze hanger systems or on fabricated frames.

f. Type 39 saddles shall be used on all insulated pipe 100 mm and larger when the temperature of the medium is above 15.5 degrees C. Type 39 saddles shall be welded to the pipe.

g. Type 40 shields shall:

(1) be used on all insulated pipes less than 100 mm.

(2) be used on all insulated pipes 100 mm and larger when the temperature of the medium is 15.5 degrees C or less.

(3) have a high density insert for pipe 50 mm and larger, and for smaller pipe when the insulation shows signs of being visibly compressed, or when the insulation or jacket shows visible signs of distortion at or near the type 40 shield. High density inserts shall have a density of 144 kg/cubic meter or greater.

h. Horizontal Pipe Supports: Horizontal pipe supports shall be spaced as specified in MSS SP-69 and a support shall be installed not over 300 mm from the pipe fitting joint at each change in direction of the piping. Pipe supports shall be spaced not over 1.5 m apart at valves. Pipe hanger loads suspended from steel joist with hanger loads between panel points in excess of 220 N shall have the excess hanger loads suspended from panel points.

i. Vertical Pipe Supports: Vertical pipe shall be supported at each floor, except at slab-on-grade, and at intervals of not more than 5 m, not more than 2.4 m from end of risers, and at vent terminations.

j. Pipe Guides: Type 35 guides using steel reinforced polytetrafluoroethylene (PTFE) or graphite slides shall be provided where required to allow longitudinal pipe movement. Lateral restraints shall be provided as required. Slide materials shall be suitable for the system operating temperatures, atmospheric conditions, and bearing loads encountered.

k. Steel Slides: Where steel slides do not require provisions for restraint of lateral movement, an alternate guide method may be used. On piping 100 mm and larger with medium 15.5 degrees C or greater, a Type 39 saddle may be welded to the pipe and freely rest on a steel plate. On piping under 100 mm, a Type 40 protection shield may be attached to the pipe or insulation and freely rest on a steel slide plate.

l. High Temperature Guides with Cradles: Where there are high system temperatures and welding to piping is not desirable, the Type 35 guide shall include a pipe cradle, welded to the guide structure and strapped securely to the pipe. The pipe shall be separated from the slide material by at least 100 mm, or by an amount adequate for the insulation, whichever is greater.

m. Insulated Pipe: Insulation on horizontal pipe shall be continuous through hangers for hot and cold piping. Other requirements on insulated pipe are specified in Section 15080 THERMAL INSULATION FOR MECHANICAL SYSTEMS.

3.1.3 Anchors

Anchors shall be provided wherever necessary or indicated to localize expansion or to prevent undue strain on piping. Anchors shall consist of heavy steel collars with lugs and bolts for clamping and attaching anchor braces, unless otherwise indicated. Anchor braces shall be installed in the most effective manner to secure the desired results using turnbuckles where required. Supports, anchors, or stays shall not be attached where they will injure the structure or adjacent construction during installation or by the weight of expansion of the pipeline.

3.1.4 Pipe Sleeves

Sleeves shall not be installed in structural members except where indicated or approved. Rectangular and square openings shall be as detailed. Each sleeve shall extend through its respective wall, floor, or roof, and

shall be cut flush with each surface. Pipes passing through concrete or masonry wall or concrete floors or roofs shall be provided with pipe sleeves fitted into place at the time of construction. Unless otherwise indicated, sleeves shall provide a minimum of 6 mm all-around clearance between bare pipe and sleeves or between jacket over insulation and sleeves. Sleeves in bearing walls, waterproofing membrane floors, and wet areas shall be steel pipe or cast iron pipe. Sleeves in non-bearing walls, floors, or ceilings may be steel pipe, cast iron pipe, galvanized sheet metal with lock-type longitudinal seam and of the metal thickness indicated, or moisture resistant fiber or plastic. Except in pipe chases or interior walls, the annular space between pipe and sleeve or between jacket over insulation and sleeve, in non-fire rated walls, shall be sealed as indicated and specified in Section 07920 JOINT SEALING. Pipes passing through wall waterproofing membrane shall be sleeved as specified above, and a waterproofing clamping flange shall be installed as indicated.

3.1.4.1 Roof and Floor Sleeves

Pipes passing through roof or floor waterproofing membrane shall be installed through a 17-ounce copper sleeve or a 0.8 mm thick aluminum sleeve, each within an integral skirt or flange. Flashing sleeve shall be suitably formed, and skirt or flange shall extend not less than 200 mm from the pipe and shall be set over the roof or floor membrane in a troweled coating of bituminous cement. Unless otherwise shown, the flashing sleeve shall extend up the pipe a minimum of 50 mm above highest floor level or a minimum of 250 mm above the roof. The annular space between the flashing sleeve and the bare pipe or between the flashing sleeve and the metal-jacket-covered insulation shall be sealed as indicated. Pipes up to and including 250 mm in diameter passing through roof or floor waterproofing membrane may be installed through a cast iron sleeve with caulking recess, anchor lugs, flashing clamp device, and pressure ring with brass bolts. Waterproofing membrane shall be clamped into place and sealant shall be placed in the caulking recess. In lieu of a waterproofing clamping flange and caulking and sealing of annular space between pipe and sleeve or conduit and sleeve, a modular mechanical type sealing assembly may be installed. Seals shall consist of interlocking synthetic rubber links shaped to continuously fill the annular space between the pipe/conduit and sleeve with corrosion protected carbon steel bolts, nuts, and pressure plates. Links shall be loosely assembled with bolts to form a continuous rubber belt around the pipe with a pressure plate under each bolt head and each nut. After the seal assembly is properly positioned in the sleeve, tightening of the bolt shall cause the rubber sealing elements to expand and provide a watertight seal between the pipe/conduit and the sleeve. Each seal assembly shall be sized as recommended by the manufacturer to fit the pipe/conduit and sleeve involved.

3.1.4.2 Fire Seal

Where pipes pass through firewalls, fire partitions, or floors, a fire seal shall be provided as specified in Section 07270 FIRESTOPPING.

3.1.4.3 Escutcheons

Escutcheons shall be provided at finished surfaces where exposed piping, bare or insulated, passes through floors, walls, or ceilings except in boiler, utility, or equipment rooms. Where sleeves project slightly from floors, special deep-type escutcheons shall be used. Escutcheons shall be secured to pipe or pipe covering.

3.1.5 Condensate Drain Lines

Water seals shall be provided in the condensate drain from all units. The depth of each seal shall be 50 mm plus 0.1 mm for each Pa, of the total static pressure rating of the unit to which the drain is connected. Water seals shall be constructed of 2 tees and an appropriate U-bend with the open end of each tee plugged. Pipe cap or plug cleanouts shall be provided where indicated. Drains indicated to connect to the sanitary waste system shall be connected by an indirect waste fitting. Air conditioner drain lines shall be insulated as specified in Section 15080 THERMAL INSULATION FOR MECHANICAL SYSTEMS.

3.1.6 Pipe-Alignment Guides

Pipe-alignment guides shall be provided where indicated for expansion loops, offsets, and bends and as recommended by the manufacturer for expansion joints, not to exceed 1.5 m on each side of each expansion joint, and in lines 100 mm or smaller not more than 600 mm on each side of the joint.

3.1.7 Air Vents and Drains

3.1.7.1 Vents

Air vents shall be provided at high points, on water coils, and where indicated to ensure adequate venting of the piping system.

3.1.7.2 Drains

Drains shall be provided at low points and where indicated to ensure complete drainage of the piping. Drains shall be accessible, and shall consist of nipples and caps or plugged tees unless otherwise indicated.

3.1.8 Valves

Isolation gate or ball valves shall be installed on each side of each piece of equipment such as pumps, heaters, heating or cooling coils, and other similar items, at the midpoint of all looped mains, and at any other points indicated or required for draining, isolating, or sectionalizing purposes. Isolation valves may be omitted where balancing cocks are installed to provide both balancing and isolation functions. Each valve except check valves shall be identified. Valves in horizontal lines shall be installed with stems horizontal or above.

3.1.9 Equipment and Installation

Frames and supports shall be provided for tanks, compressors, pumps, valves, air handling units, fans, coils, dampers, and other similar items requiring supports. Air handling units shall be floor mounted or ceiling hung, as indicated. The method of anchoring and fastening shall be as detailed. Floor- mounted equipment, unless otherwise indicated, shall be set on not less than 150 mm concrete pads or curbs doweled in place. Concrete foundations for circulating pumps shall be heavy enough to minimize the intensity of the vibrations transmitted to the piping and the surrounding structure, as recommended in writing by the pump manufacturer. In lieu of a concrete pad foundation, a concrete pedestal block with isolators placed between the pedestal block and the floor may be provided. The concrete foundation or concrete pedestal block shall be of a mass not less than three times the weight of the components to be supported. Lines connected to the pump mounted on pedestal blocks shall be provided with flexible connectors. Foundation drawings, bolt- setting information, and foundation bolts shall be furnished prior to concrete foundation construction

for all equipment indicated or required to have concrete foundations. Concrete for foundations shall be as specified in Section 03300 CAST-IN-PLACE STRUCTURAL CONCRETE.

3.1.10 Access Panels

Access panels shall be provided for concealed valves, vents, controls, dampers, and items requiring inspection or maintenance. Access panels shall be of sufficient size and located so that the concealed items may be serviced and maintained or completely removed and replaced. Access panels shall be as specified in Section 05500 MISCELLANEOUS METALS.

3.1.11 Flexible Connectors

Pre-insulated flexible connectors and flexible duct shall be attached to other components in accordance with the latest printed instructions of the manufacturer to ensure a vapor tight joint. Hangers, when required to suspend the connectors, shall be of the type recommended by the connector or duct manufacturer and shall be provided at the intervals recommended.

3.1.12 Sleeved and Framed Openings

Space between the sleeved or framed opening and the duct or the duct insulation shall be packed as specified in Section 07270 FIRESTOPPING for fire rated penetrations. For non-fire rated penetrations, the space shall be packed as specified in Section 07920 JOINT SEALING.

3.1.13 Metal Ductwork

Installation shall be according to SMACNA-06 unless otherwise indicated. Duct supports for sheet metal ductwork shall be according to SMACNA-06, unless otherwise specified. Friction beam clamps indicated in SMACNA-06 shall not be used. Risers on high velocity ducts shall be anchored in the center of the vertical run to allow ends of riser to move due to thermal expansion. Supports on the risers shall allow free vertical movement of the duct. Supports shall be attached only to structural framing members and concrete slabs. Supports shall not be anchored to metal decking unless a means is provided and approved for preventing the anchor from puncturing the metal decking. Where supports are required between structural framing members, suitable intermediate metal framing shall be provided. Where C-clamps are used, retainer clips shall be provided.

3.1.14 Omitted

3.1.15 Omitted

3.1.16 Omitted

3.1.17 Omitted

3.1.18 Dust Control

To prevent the accumulation of dust, debris and foreign material during construction, temporary dust control protection shall be provided. The distribution system (supply and return) shall be protected with temporary seal-offs at all inlets and outlets at the end of each day's work. Temporary protection shall remain in place until system is ready for startup.

3.1.19 Insulation

Thickness and application of insulation materials for ductwork, piping, and equipment shall be according to Section 15080 THERMAL INSULATION FOR MECHANICAL SYSTEMS. Outdoor air intake ducts and plenums shall be externally insulated up to the point where the outdoor air reaches the conditioning unit.

3.1.20 Duct Test Holes

Holes with closures or threaded holes with plugs shall be provided in ducts and plenums as indicated or where necessary for the use of pitot tube in balancing the air system. Extensions, complete with cap or plug, shall be provided where the ducts are insulated.

3.1.21 Power Roof Ventilator Mounting

Foamed 13 mm thick, closed-cell, flexible elastomer insulation shall cover width of roof curb mounting flange. Where wood nailers are used, holes shall be pre-drilled for fasteners.

3.1.22 Power Transmission Components Adjustment

V-belts and sheaves shall be tested for proper alignment and tension prior to operation and after 72 hours of operation at final speed. Belts on drive side shall be uniformly loaded, not bouncing. Alignment of direct driven couplings shall be to within 50 percent of manufacturer's maximum allowable range of misalignment.

3.2 FIELD PAINTING AND PIPING IDENTIFICATION

Finish painting of items only primed at the factory or surfaces not specifically noted otherwise and identification for piping are specified in Section 09900 PAINTING, GENERAL.

3.3 PIPING HYDROSTATIC TEST

After cleaning, water piping shall be hydrostatically tested at a pressure equal to 150 percent of the total system operating pressure for period of time sufficient to inspect every joint in the system and in no case less than 2 hours. Leaks shall be repaired and piping retested until test is successful. No loss of pressure will be allowed. Leaks shall be repaired by re-welding or replacing pipe or fittings. Caulking of joints will not be permitted. Concealed and insulated piping shall be tested in place before covering or concealing.

3.4 DELETED

3.5 CLEANING AND ADJUSTING

Pipes shall be cleaned free of scale and thoroughly flushed of foreign matter. A temporary bypass shall be provided for water coils to prevent flushing water from passing through coils. Strainers and valves shall be

thoroughly cleaned. Prior to testing and balancing, air shall be removed from water systems by operating the air vents. Temporary measures, such as piping the overflow from vents to a collecting vessel shall be taken to avoid water damage during the venting process. Air vents shall be plugged or capped after the system has been vented. Inside of room fan-coil units air terminal units, ducts, plenums, and casing shall be thoroughly cleaned of debris and blown free of small particles of rubbish and dust and then shall be vacuum cleaned before installing outlet faces. Equipment shall be wiped clean, with traces of oil, dust, dirt, or paint spots removed. Temporary filters shall be provided prior to startup of all fans that are operated during construction, and new filters shall be installed after all construction dirt has been removed from the building, and the ducts, plenums, casings, and other items specified have been vacuum cleaned. System shall be maintained in this clean condition until final acceptance. Bearings shall be properly lubricated with oil or grease as recommended by the manufacturer. Belts shall be tightened to proper tension. Control valves and other miscellaneous equipment requiring adjustment shall be adjusted to setting indicated or directed. Fans shall be adjusted to the speed indicated by the manufacturer to meet specified conditions.

3.6 TESTING, ADJUSTING, AND BALANCING

Testing, adjusting, and balancing shall be as specified in Section 15990 TESTING, ADJUSTING AND BALANCING OF HVAC SYSTEMS. Testing, adjusting, and balancing shall begin only when the air supply and distribution, including controls, has been completed, with the exception of performance tests.

3.7 PERFORMANCE TESTS

After testing, adjusting, and balancing has been completed as specified, each system shall be tested as a whole to see that all items perform as integral parts of the system and temperatures and conditions are evenly controlled throughout the building. Corrections and adjustments shall be made as necessary to produce the conditions indicated or specified. Capacity tests and general operating tests shall be conducted by an experienced engineer. Tests shall cover a period of not less than 7 days for each system and shall demonstrate that the entire system is functioning according to the specifications. Coincidental chart recordings shall be made at points indicated on the drawings for the duration of the time period and shall record the temperature at space thermostats or space sensors, the humidity at space humidistats or space sensors and the ambient temperature and humidity in a shaded and weather protected area.

3.8 FIELD TRAINING

The Contractor shall conduct a training course for operating and maintenance personnel as designated by the Contracting Officer. Training shall be provided for a period of 8 hours of normal working time and shall start after the system is functionally complete but prior to the performance tests. The field instruction shall cover all of the items contained in the approved Operating and Maintenance Instructions.

END OF SECTION

This page intentionally blank

SECTION 15951

DIRECT DIGITAL CONTROL FOR HVAC

PART 1 GENERAL

1.1 REFERENCES

The publications listed below form a part of this specification to the extent referenced. The publications are referred to in the text by basic designation only.

AIR MOVEMENT AND CONTROL ASSOCIATION (AMCA)

AMCA 500	(1989) Test Methods for Louvers, Dampers and Shutters

AMERICAN NATIONAL STANDARDS INSTITUTE (ANSI)

ANSI C12.1	(1988) Code for Electricity Metering
ANSI X3.64	(1979; R 1990) Additional Controls for Use with American National Standard Code for Information Interchange
ANSI X3.154	(1988) Office Machines and Supplies - Alphanumeric Machines-Keyboard Arrangement

AMERICAN SOCIETY FOR TESTING AND MATERIALS (ASTM)

ASTM A 269	(1994a) Seamless and Welded Austenitic Stainless Steel Tubing for General Service
ASTM B 88	(1993a) Seamless Copper Water Tube
ASTM D 635	(1991) Rate of Burning and/or Extent and Time of Burning of Self-Supporting Plastics in a Horizontal Position
ASTM D 1693	(1970; R 1988) Environmental Stress-Cracking of Ethylene Plastics

AMERICAN SOCIETY OF HEATING, REFRIGERATING AND AIR-CONDITIONING ENGINEERS (ASHRAE)

ASHRAE-03	(1993; Errata) Handbook, Fundamentals I-P Edition

AMERICAN SOCIETY OF MECHANICAL ENGINEERS (ASME)

ASME BPV VIII Div I	(1992; Addenda Dec 1992, Dec 1993) Boiler and Pressure Vessel Code; Section VIII, Pressure Vessels Division 1 - Basic Coverage
ASME B16.34	(1988) Valves - Flanged, Threaded, and Welding End
ASME B40.1	(1991) Gauges - Pressure Indicating Dial Type - Elastic Element

CODE OF FEDERAL REGULATIONS (CFR)

47 CFR 15	Radio Frequency Devices
47 CFR 68	Connection of Terminal Equipment to the Telephone Network

INSTITUTE OF ELECTRICAL AND ELECTRONICS ENGINEERS (IEEE)

IEEE C62.41	(1991) Surge Voltages in Low-Voltage AC Power Circuits

INSTRUMENT SOCIETY OF AMERICA (ISA)

ISA S7.3	(1975; R 1981) Quality Standard for Instrument Air

NATIONAL ELECTRICAL MANUFACTURERS ASSOCIATION (NEMA)

NEMA 250	(1993) Enclosures for Electrical Equipment (1000 Volts Maximum)
NEMA ICS 1	(1993) Industrial Control and Systems

NATIONAL FIRE PROTECTION ASSOCIATION (NFPA)

NFPA 90A	(1993) Installation of Air Conditioning and Ventilating Systems

SHEET METAL & AIR CONDITIONING CONTRACTORS' NATIONAL ASSOCIATION (SMACNA)

SMACNA-07	(1993) HVAC Systems - Testing, Adjusting and Balancing

UNDERWRITERS LABORATORIES (UL)

UL 94	(1991; Rev thru May 1994) Tests for Flammability

	of Plastic Materials for Parts in Devices and Appliances
UL 555S	(1993; Rev Sep 1994) Leakage Rated Dampers for Use in Smoke-Control Systems
UL 916	(1994; Rev Apr 1994) Energy Management Equipment

1.2 GENERAL REQUIREMENTS

The direct digital control (DDC) shall be a complete system suitable for the heating, ventilating and air-conditioning (HVAC) system. The DDC control system shall be manufactured by Staefa Controls and installed by authorized representatives of Staefa Controls to match the existing base system. This is a proprietary specification; no substitutions or alternate manufacturer's system shall be allowed. The contractor shall provide all services, materials, and equipment necessary for a complete DDC system for the project building.

1.2.1 Nameplates, Lens Caps, and Tags

Nameplates and lens caps bearing legends as shown and tags bearing device-unique identifiers as shown shall have engraved or stamped characters. A plastic or metal tag shall be mechanically attached directly to each device or attached by a metal chain or wire. Each airflow measurement station shall have a tag showing flow rate range for signal output range, duct size, and identifier as shown.

1.2.2 Verification of Dimensions

The Contractor shall become familiar with all details of the work, shall verify all dimensions in the field, and shall advise the Contracting Officer of any discrepancy before performing any work.

1.2.3 Drawings

Because of the small scale of the drawings, it is not possible to indicate all offsets, fittings, and accessories that may be required. The Contractor shall carefully investigate the mechanical, electrical, and finish conditions that could affect the work to be performed, shall arrange such work accordingly, and shall furnish all work necessary to meet such conditions.

1.2.4 Power-Line Surge Protection

Equipment connected to ac circuits shall be protected from power-line surges. Equipment protection shall meet the requirements of IEEE C62.41. Fuses shall not be used for surge protection.

1.2.5 Surge Protection for Transmitter and Control Wiring

DDC system control-panel equipment shall be protected against surges induced on control and transmitter wiring installed outside and as shown. The equipment protection shall be tested in the normal mode and in the common mode, using the following two waveforms:

a. A 10-microsecond by 1,000-microsecond waveform with a peak voltage of 1,500 volts and a peak current of 60 amperes.

b. An 8-microsecond by 20-microsecond waveform with a peak voltage of 1,000 volts and a peak current of 500 amperes.

1.2.7 System Overall Reliability Requirement

The system shall be configured and installed to yield a mean time between failure (MTBF) of at least 40,000 hours. Each DDC panel shall be designed, configured, installed and programmed to provide for stand alone operation with minimal performance degradation on failure of other system components to which it is connected or with which it communicates.

1.2.8 Multiple DDC Panel Requirement

Where the system to be controlled by the DDC system is located in multiple mechanical rooms, each mechanical room shall have at least one DDC panel. DDC panels shall be located in the same room as the equipment being controlled or in an adjacent space which has direct access to the equipment room. DDC panels shall not control equipment located in a different mechanical room.

1.2.9 System Accuracy and Display

The system shall maintain an end-to-end accuracy for 1 year from sensor to operator's console display for the applications specified and shall display the value as specified. Each temperature shall be displayed and printed to nearest 0.05 degree C.

1.2.9.1 Space Temperature

Space temperature with a range of 10 to 30 degrees C plus or minus 0.5 degrees C for conditioned space; minus 1 to plus 55 degrees C plus or minus 0.05 degrees C for unconditioned space.

1.2.9.2 Duct Temperature

Duct temperature with a range of 5 to 60 degrees C plus or minus 1 degree C.

1.2.9.3 Outside Air Temperature

Outside air (OA) temperature with a range of minus 35 to plus 55 degrees C plus or minus 1 degree C; with a subrange of minus 1 to plus 40 degrees C plus or minus 0.5 degree C.

1.2.9.4 Water Temperature

Water temperature with a range of minus 1 to plus 40 degrees C plus or minus 0.5 degree C; the range of 40 to 120 degrees C plus or minus 1 degree C; and water temperatures for the purpose of performing energy (Btu) calculations using differential temperatures to plus or minus 0.5 degree C using matched sensors.

1.2.9.5 High Temperature

High temperature with a range of 200 to 260 degrees C plus or minus 1 degree C.

1.2.9.6 Relative Humidity

Relative humidity with a range of 20 to 80 percent plus or minus 6.0 percent of range (display and print to nearest 1.0 percent).

1.2.9.7 Pressure

Pressure with a range for the specific application plus or minus 2.0 percent of range (display and print to nearest kPa.)

1.2.9.8 Flow

Flow with a range for the specific application plus or minus 3.0 percent of range, and flows for the purpose of thermal calculations to plus or minus 2.0 percent of actual flow (display and print to nearest unit, such as liters per second.

1.2.9.9 KWh and kW Demand

KWh and kW demand with a range for the specific application plus or minus 1.0 percent of reading (display and print to nearest kWh or kW).

1.2.9.10 Analog Value Input

An analog value input to the system's equipment via an AI with a maximum error of 0.50 percent of range, not including the sensor or transmitter error. This accuracy shall be maintained over the specified environmental conditions.

1.3 SUBMITTALS

Government approval is required for submittals with a "GA" designation; submittals having an "FIO" designation are for information only. The following shall be submitted in accordance with Section 01300 SUBMITTAL PROCEDURES:

SD-01 Data

Equipment Compliance Booklet; GA.

The HVAC Control System Equipment Compliance Booklet (ECB) shall be in booklet form and indexed, with numbered tabs separating the information on each device. It shall consist of, but not be limited to, data sheets and catalog cuts which document compliance of all devices and components with the specifications. The ECB shall be indexed in alphabetical order by the unique identifiers. Devices and components which do not have unique identifiers shall follow the devices and components with unique identifiers and shall be indexed in alphabetical order according to their functional name. The ECB shall include a Bill of Materials for each HVAC Control System. The Bill of Materials shall function as the Table of Contents for the ECB and shall include the device's unique identifier, device function, manufacturer, model/part/catalog number used for ordering, and tab number where the device information is located in the ECB. The ECB shall be submitted along with Submittal SD-04, Drawings.

SD-04 Drawings

HVAC Control System; GA.

Drawings shall be on A1 (841 mm x 594 mm) sheets in the form and arrangement shown. The drawings shall use the same abbreviations, symbols, nomenclature and identifiers shown. Each control-system element on a drawing shall have a unique identifier as shown. All HVAC Control System Drawings shall be delivered together as a complete submittal. Deviations must be approved by the Contracting Officer. Drawings shall be submitted along with Submittal SD-01, Data.

HVAC Control System Drawings shall include the following:

Sheet One:	Drawing Index, HVAC Control System Legend
Sheet Two:	Valve Schedule, Damper Schedule
Sheet Three:	Compressed Air Station Schematic
Sheet Four:	Control System Schematic and Equipment Schedule
Sheet Five:	Sequence of Operation and Data Terminal Strip Layout
Sheet Six:	Control Loop Wiring Diagrams
Sheet Seven:	Motor Starter and Relay Wiring Diagram
Sheet Eight:	Communication Network and Block Diagram
Sheet Nine:	DDC Panel Installation and Block Diagram
.	
.	Repeat Sheets Four through Seven for each AHU System

The HVAC Control System Drawing Index shall show the name and number of the building, military site, State or other similar designation, and Country. The Drawing Index shall list all HVAC Control System Drawings, including the drawing number, sheet number, drawing title, and computer filename when used.

The HVAC Control System Legend shall show generic symbols and the name of all devices shown on the HVAC Control System Drawings.

The Valve Schedule shall include each valve's unique identifier, size, flow coefficient (C_v), pressure drop at specified flow rate, spring range, positive positioner range, actuator size, close-off pressure data, dimensions, and access and clearance requirements data. Valve schedules may be submitted in advance but shall be included in the complete submittal.

The Damper Schedule shall contain each damper's and each actuator's identifier, nominal and actual sizes, orientation of axis and frame, direction of blade rotation, spring ranges, operation rate, positive positioner ranges, locations of actuators and damper end switches, arrangement of sections in multi-section dampers, and methods of connecting dampers, actuators, and linkages. The Damper Schedule shall include the maximum leakage rate at the operating static-pressure differential. The Damper Schedule shall contain actuator selection data supported by calculations of the torque required to move and seal the dampers, access and clearance requirements. Damper schedules may be submitted in advance but shall be included in the complete submittal.

The HVAC Control System Schematics shall be in the form shown, and shall show all control and mechanical devices associated with the HVAC system. A System Schematic drawing shall be submitted for each HVAC system.

The HVAC Control System Equipment Schedule shall be in the form shown. All devices shown on the drawings having unique identifiers shall be referenced in the Equipment Schedule. Information to be included in the Equipment Schedule shall be the Control Loop, Device Unique Identifier, Device Function,

Setpoint, Input Range, and additional important parameters (i.e. output range). An Equipment Schedule shall be submitted for each HVAC system.

The HVAC Control System Sequence of Operation shall reflect the language and format of this specification, and shall refer to the devices by their unique identifiers as shown. No operational deviations from specified sequences will be permitted without prior written approval of the Contracting Officer. Sequences of Operation shall be submitted for each HVAC Control System including each type of terminal-unit control system.

The HVAC Control System Wiring Diagrams shall be functional wiring diagrams which show the interconnection of conductors and cables to HVAC control panel terminal blocks and to the identified terminals of devices, starters and package equipment. The wiring diagrams shall show all necessary jumpers and ground connections. The wiring diagrams shall show the labels of all conductors. All sources of power required for HVAC control systems and for packaged-equipment control systems shall be identified back to the panel-board circuit breaker number, HVAC system control panel, magnetic starter, or packaged equipment control circuit. Each power supply and transformer not integral to a controller, starter, or packaged equipment shall be shown. The connected volt-ampere load and the power supply volt-ampere rating shall be shown. Wiring Diagrams shall be submitted for each HVAC control system.

SD-08 Statements

Commissioning Procedures; GA.

Six copies of the HVAC Control System Commissioning Procedures, in booklet form and indexed, 60 days prior to the scheduled start of commissioning. Commissioning Procedures shall be provided for each HVAC control system, and for each type of terminal-unit control system. The Commissioning Procedures shall reflect the format and language of this specification, and refer to devices by their unique identifiers as shown. The Commissioning Procedures shall be specific for each HVAC system, and shall give detailed step-by-step procedures for commissioning of the system.

The Commissioning Procedures shall include detailed, product-specific set-up procedures, configuration procedures, adjustment procedures, and calibration procedures for each device. Where the detailed product-specific commissioning procedures are included in manufacturer supplied manuals, reference may be made in the HVAC Control System Commissioning Procedures to the manuals.

An HVAC Control System Commissioning Procedures Equipment List shall be included that lists the equipment to be used to accomplish commissioning. The list shall include manufacturer name, model number, equipment function, the date of the latest calibration, and the results of the latest calibration.

Performance Verification Test Procedures; GA.

Six copies of the HVAC Control System Performance Verification Test Procedures, in booklet form and indexed, 60 days before the Contractor's scheduled test dates. The Performance Verification Test Procedures shall refer to the devices by their unique identifiers as shown, shall explain, step-by-step, the actions and expected results that will demonstrate that the HVAC control system performs in accordance with the sequences of operation, and other contract documents.

An HVAC Control System Performance Verification Test Equipment List shall be included that lists the equipment to be used during Performance Verification Testing. The list shall include manufacturer name,

model number, equipment function, the date of the latest calibration, and the results of the latest calibration.

Training Course Materials; GA.

An outline for the HVAC Control System Training Course with a proposed time schedule. Approval of the planned training schedule shall be obtained from the Government at least 60 days prior to the start of the training.

Six copies of HVAC Control System Training Course material 30 days prior to the scheduled start of the training course. The Training Course material shall include the Operation Manual, Maintenance and Repair Manual, and paper copies of overheads used in the course.

SD-09 Reports

Commissioning Report; GA.

Six copies of the HVAC Control System Commissioning Report, in booklet form and indexed, within 30 days after completion of the system commissioning. The Commissioning Report shall include data collected during the HVAC Control System Commissioning Procedures and shall follow the format of the Commissioning Procedures. The Commissioning Report shall include all Configuration Checksheets with final values listed for all parameters, setpoints, P, I, D setting constants, calibration data for all devices, results of adjustments, and results of testing.

Performance Verification Test Report; GA.

Six copies of the HVAC Control System Performance Verification Test Report, in booklet form and indexed, within 30 days after completion of the test. The HVAC Control System Performance Verification Test Report shall include data collected during the HVAC Control System Performance Verification Test. The original copies of all data gathered during the Performance Verification Test shall be turned over to the Government after Government approval of the test results.

SD-18 Records

Service Organizations; FIO.

Six copies of a list of service organizations qualified to service the HVAC control system. The list shall include the service organization name, address, technical point of contact and telephone number, and contractual point of contact and telephone number.

SD-19 Operation and Maintenance Manuals

Operation Manual; GA.

Six copies of the HVAC Control System Operation Manual for each HVAC control system, in booklet form and indexed, 30 days before the date scheduled for the Training Course. The Operation Manual shall include the HVAC Control System Sequence of Operation, and Procedures for the HVAC System Start-up, Operation and Shut-down. The Operation Manual shall include all As-Built HVAC Control System Detail Drawings. The Operation Manual shall include the As-Built Configuration Checksheets,

the Procedures for Changing HVAC Control System Setpoints, and the Procedures for Placing HVAC System Controllers in the Manual Control Mode.

The Procedures for Changing HVAC Control System Setpoints shall describe the step-by-step procedures required to change: the process variable setpoints, the alarm setpoints, the bias settings, and setpoint reset schedules.

The Procedures for Placing HVAC System Controllers in the Manual Control Mode shall describe step-by-step procedures required to obtain manual control of each controlled device and to manually adjust their positions.

Maintenance and Repair Manual; GA.

Six copies of the HVAC Control System Maintenance and Repair Manual for each HVAC control system, in booklet form and indexed in hardback binders, 30 days before the date scheduled for the Training Course. The Maintenance and Repair Manual shall include the Routine Maintenance Checklist, a Recommended Repair Methods List, a List of Recommended Maintenance and Repair Tools, the Qualified Service Organization List, the As-Built Commissioning Procedures and Report, the As-Built Performance Verification Test Procedures and Report, and the As-Built Equipment Data Booklet. The Routine Maintenance Checklist shall be arranged in a columnar format. The first column shall list all devices listed in the Equipment Compliance Booklet, the second column shall state the maintenance activity or state no maintenance required, the third column shall state the frequency of the maintenance activity, and the fourth column for additional comments or reference.

The Recommended Repair Methods List shall be arranged in a columnar format and shall list all devices in the Equipment Data Compliance Booklet and state the guidance on recommended repair methods, either field repair, factory repair, or whole-item replacement.

The As-Built Equipment Data Booklet shall include the Equipment Compliance Booklet and all manufacturer supplied user manuals and information.

If the Operation Manual and the Maintenance and Repair Manual are provided in a common volume, they shall be clearly differentiated and separately indexed.

1.4 DELIVERY AND STORAGE

Products shall be stored with protection from the weather, humidity and temperature variations, dirt and dust, and other contaminants, within the storage-condition limits published by the equipment manufacturer. Dampers shall be stored so that seal integrity, blade alignment and frame alignment are maintained.

1.5 OMITTED

1.6 TRAINING

1.6.1 Training-Course Requirements

A training course shall be conducted for four operating staff members designated by the Contracting Officer in the maintenance and operation of the system, including specified hardware and software. The training period, for a total of 32 hours of normal working time, shall be conducted within 30 days after successful completion of the performance verification test. The training course shall be conducted at the

project site. Audiovisual equipment and five sets of all other training materials and supplies shall be provided. A training day is defined as 8 hours of classroom instruction, including two 15-minute breaks and excluding lunchtime, Monday through Friday, during the daytime shift in effect at the training facility.

1.6.2 Training-Course Content

For guidance in planning the required instruction, the Contractor shall assume that attendees will have a high school education or equivalent, and are familiar with HVAC systems. The training course shall cover all of the material contained in the Operating and Maintenance Instructions, the layout and location of each HVAC control panel, the layout of one of each type of unitary equipment and the locations of each, the location of each system-control device external to the panels, the location of the compressed-air station, preventive maintenance, troubleshooting, diagnostics, calibration, adjustment, commissioning, tuning, and repair procedures. Typical systems and similar systems may be treated as a group, with instruction on the physical layout of one such system. The results of the performance verification test and the calibration, adjustment and commissioning report shall be presented as benchmarks of HVAC control-system performance by which to measure operation and maintenance effectiveness.

1.7 MAINTENANCE AND SERVICE

1.7.1 General Requirements

Services, materials and equipment shall be provided as necessary to maintain the entire system in an operational state as specified for a period of 1 year after successful completion and acceptance of the Performance Verification Test. Impacts on facility operations shall be minimized.

1.7.2 Description of Work

The adjustment and repair of the system shall include the manufacturer's required adjustments of computer equipment, software updates, transmission equipment and instrumentation and control devices.

1.7.3 Personnel

Service personnel shall be qualified to accomplish work promptly and satisfactorily. The Government shall be advised in writing of the name of the designated service representative, and of any changes in personnel.

1.7.4 Scheduled Inspections

Two inspections shall be performed at 6-month intervals (or less if required by the manufacturer), and all work required shall be performed. Inspections shall be scheduled in June and December. These inspections shall include:

a. Visual checks and operational tests of all equipment.

b. Fan checks and filter changes for all control system equipment.

c. Clean all control system equipment including interior and exterior surfaces.

d. Check and calibrate each field device. Check and calibrate 50 percent of the total analog points during the first inspection. Check and calibrate the remaining 50 percent of the analog points during the

second major inspection. Certify analog test instrumentation accuracy to be twice that of the device being calibrated. Randomly check at least 25 percent of all digital points for proper operation during the first inspection. Randomly check at least 25 percent of the remaining digital points during the second inspection.

e. Run all system software diagnostics and correct all diagnosed problems.

f. Resolve any previous outstanding problems.

1.7.5 Scheduled Work

This work shall be performed during regular working hours, Monday through Friday, excluding legal holidays.

1.7.6 Emergency Service

The Government will initiate service calls when the system is not functioning properly. Qualified personnel shall be available to provide service to the system. A telephone number where the service supervisor can be reached at all times shall be provided. Service personnel shall be at the site within 24 hours after receiving a request for service. The control system shall be restored to proper operating condition within 3 calendar days after receiving a request for service.

1.7.7 Operation

Scheduled adjustments and repairs shall include verification of the control system operation as demonstrated by the applicable tests of the performance verification test.

1.7.8 Records and Logs

Dated records and logs shall be kept of each task, with cumulative records for each major component, and for the complete system chronologically. A continuous log shall be maintained for all devices. The log shall contain all initial analog span and zero calibration values and all digital points. Complete logs shall be kept and shall be available for inspection onsite, demonstrating that planned and systematic adjustments and repairs have been accomplished for the control system.

1.7.9 Work Requests

Each service call request shall be recorded as received and shall include the serial number identifying the component involved, its location, date and time the call was received, nature of trouble, names of the service personnel assigned to the task, instructions describing what has to be done, the amount and nature of the materials to be used, the time and date work started, and the time and date of completion. A record of the work performed shall be submitted within 5 days after work is accomplished.

1.7.10 System Modifications

Recommendations for system modification shall be submitted in writing. No system modifications, including operating parameters and control settings, shall be made without prior approval of the Government. Any modifications made to the system shall be incorporated into the operations and maintenance manuals, and other documentation affected.

1.7.11 Software

Updates to the software shall be provided for system, operating and application software, and operation in the system shall be verified. Updates shall be incorporated into operations and maintenance manuals, and software documentation. There shall be at least one scheduled update near the end of the first year's warranty period, at which time the latest released version of the Contractor's software shall be installed and validated.

PART 2 PRODUCTS

2.1 GENERAL EQUIPMENT REQUIREMENTS

Units of the same type of equipment shall be products of a single manufacturer. Each major component of equipment shall have the manufacturer's name and address, and the model and serial number in a conspicuous place. Materials and equipment shall be standard products of a manufacturer regularly engaged in the manufacturing of such products, which are of a similar material, design and workmanship. The standard products shall have been in a satisfactory commercial or industrial use for 2 years prior to use on this project. The 2 years' use shall include applications of equipment and materials under similar circumstances and of similar size. The 2 years' experience shall be satisfactorily completed by a product which has been sold or is offered for sale on the commercial market through advertisements, manufacturers' catalogs, or brochures. Products having less than a 2-year field service record will be acceptable if a certified record of satisfactory field operation, for not less than 6,000 hours exclusive of the manufacturer's factory tests, can be shown. The equipment items shall be supported by a service organization. Items of the same type and purpose shall be identical, including equipment, assemblies, parts and components. Automatic temperature controls shall be direct digital controls that will provide the required sequence of operation.

2.1.1 Electrical and Electronic Devices

Electrical, electronic, and electropneumatic devices not located within an DDC panel shall have a NEMA ICS 1 enclosure in accordance with NEMA 250 unless otherwise shown.

2.1.2 Standard Signals

Except for air distribution terminal unit control equipment, the output of all analog transmitters and the analog input and output of all DDC panels shall be 4-to-20 mAdc signals. The signal shall originate from current-sourcing devices and shall be received by current-sinking devices.

2.1.3 Ambient Temperature Limits

DDC panels shall have ambient condition ratings of 1.7 to 49 degrees C and 10 to 95 percent relative humidity, noncondensing. Devices installed outdoors shall operate within limit ratings of minus 37 to plus 66 degrees C. Instrumentation and control elements shall be rated for continuous operation under the ambient environmental temperature, pressure, humidity, and vibration conditions specified or normally encountered for the installed location.

2.2 OMITTED

2.3 WIRING

2.3.1 Terminal Blocks

Terminal blocks shall be insulated, modular, feed-through, clamp style with recessed captive screw-type clamping mechanism, shall be suitable for rail mounting, and shall have end plates and partition plates for separation or shall have enclosed sides.

2.3.2 Control Wiring for 24-Volt Circuits

Control wiring for 24-volt circuits shall be 18 AWG minimum, stranded copper and shall be rated for 300-volt service.

2.3.3 Wiring for 120-Volt Circuits

Wiring for 120-volt circuits shall be 18 AWG minimum, stranded copper and shall be rated for 600-volt service.

2.3.4 Instrumentation Cable

Instrumentation cable shall be 18 AWG, stranded copper, single- or multiple-twisted, minimum 50 mm lay of twist, 100 percent shielded pairs, and shall have a 300-volt insulation. Each pair shall have a 20 AWG tinned-copper drain wire and individual overall pair insulation. Cables shall have an overall aluminum-polyester or tinned-copper cable-shield tape, overall 20 AWG tinned-copper cable drain wire, and overall cable insulation.

2.3.5 Transformers

Step down transformers shall be utilized where control equipment operates at lower than line circuit voltage. Transformers, other than transformers in bridge circuits, shall have primaries wound for the voltage available and secondaries wound for the correct control circuit voltage. Transformer shall be sized so that the connected load is 80 percent of the rated capacity or less. Transformers shall conform to UL 508 and NEMA ST 1.

2.4 ACTUATORS

2.4.1 General Requirements

Actuators shall be electric or electronic as shown and shall be provided with mounting and connecting hardware. Actuators shall fail to their spring-return positions on signal or power failure, except that fan coil unit actuators may be of the floating type. The actuator stroke shall be limited in the direction of power stroke by an adjustable stop. Actuators shall have a visible position indicator. Actuators shall smoothly open or close the devices to which they are applied and shall have a full stroke response time of 60 seconds or less. Electric or electronic actuators operating in series shall have an auxiliary actuator driver.

2.4.2 Valve Actuators

Valve actuators shall be selected to provide a minimum of 125 percent of the motive power necessary to operate the valve over its full range of operation.

2.5 AUTOMATIC CONTROL VALVES

Valves shall have stainless-steel stems and stuffing boxes with extended necks to clear the piping insulation. Unless otherwise stated, valves shall have globe style bodies. Valve bodies shall be designed for not less than 862 kPa working pressure or 150 percent of the system operating pressure, whichever is greater. Valve leakage rating shall be 0.01 percent of rated Cv. Unless otherwise specified, bodies for valves 40 mm and smaller shall be brass or bronze, with threaded or union ends; bodies for 50 mm valves shall have threaded ends; and bodies for valves 50 mm to 80 mm shall be of brass, bronze or iron. Bodies for valves 65 mm and larger shall be provided with flanged-end connections. Valve Cv shall be within 100 to 125 percent of the Cv shown.

2.5.1 Butterfly-Valve Assembly

Butterfly valves shall be threaded lug type suitable for dead-end service and modulation to the fully-closed position, with carbon-steel bodies and noncorrosive discs, stainless steel shafts supported by bearings, and EPDM seats suitable for temperatures from minus 29 to plus 121 degrees C. Valves shall have a manual means of operation independent of the actuator. The rated Cv for butterfly valves shall be the valve Cv at 70% open (60 degrees open).

2.5.2 Two-Way Valves

Two-way modulating valves shall have equal-percentage characteristics.

2.5.3 Three-Way Valves

Three-way valves shall provide linear flow control with constant total flow throughout full plug travel.

2.5.4 Duct-Coil and Terminal-Unit-Coil Valves

Control valves with either flare-type or solder-type ends shall be provided for duct or terminal-unit coils. Flare nuts shall be furnished for each flare-type end valve.

2.5.5 Valves for Chilled-Water, Condenser-Water, and Glycol Service

Internal valve trim shall be bronze except that valve stems may be type 316 stainless steel. Valve Cv shall be within 100 percent to 125 percent of the Cv shown. Valves 100 mm and larger shall be butterfly.

2.5.6 Valves for Hot-Water and Dual Temperature Service

For hot water service below 122 degrees C and dual-temperature service, internal trim (including seats, seat rings, modulating plugs, and springs) of valves controlling water hotter than 99 degrees C shall be Type 316 stainless steel. Internal trim for valves controlling water 99 degrees C or less shall be brass or bronze. Nonmetallic parts of hot-water control valves shall be suitable for a minimum continuous operating temperature of 121 degrees C or 28 degrees C above the system design temperature, whichever is higher. Valves 100 mm and larger shall be butterfly valves.

2.5.7 Valves for Steam Service

Bodies for valves 100 mm and larger shall be iron. Internal valve trim shall be Type 316 stainless steel. Valve Cv shall be not less than shown nor greater than the Cv of the manufacturer's next larger size.

2.5.8 Valves for High-Temperature Hot-Water Service

For high-temperature hot water service above 121 degrees C, valve bodies shall be rated ANSI Class 300, as specified in ASME B16.34. Valve and actuator combination shall be normally closed. Bodies shall be carbon steel, globe type with welded ends on valves 25 mm and larger. Valves smaller than 25 mm shall have socket-weld ends. Packing shall be virgin polytetrafluoroethylene (PTFE). Internal valve trim shall be Type 316 stainless steel. Valve Cv shall be within 100 percent to 125 percent of the Cv shown.

2.6 DAMPERS

2.6.1 Damper Assembly

A single damper section shall have blades no longer than 1.2 meters and shall be no higher than 1.8 meters. Maximum damper blade width shall be 203 mm. Larger sizes shall be made from a combination of sections. Dampers shall be steel, or other materials where shown. Flat blades shall be made rigid by folding the edges. Blade-operating linkages shall be within the frame so that blade-connecting devices within the same damper section shall not be located directly in the air stream. Damper axles shall be 13 mm minimum, plated steel rods supported in the damper frame by stainless steel or bronze bearings. Blades mounted vertically shall be supported by thrust bearings. Pressure drop through dampers shall not exceed 10 Pa at 5.1 m/s in the wide-open position. Frames shall not be less than 50 mm in width. Dampers shall be tested in accordance with AMCA 500.

2.6.2 Operating Links

Operating links external to dampers, such as crankarms, connecting rods, and line shafting for transmitting motion from damper actuators to dampers, shall withstand a load equal to at least twice the maximum required damper-operating force. Rod lengths shall be adjustable. Links shall be brass, bronze, zinc-coated steel, or stainless steel. Working parts of joints and clevises shall be brass, bronze, or stainless steel. Adjustments of crankarms shall control the open and closed positions of dampers.

2.6.3 Damper Types

Dampers shall be parallel-blade type.

2.6.3.1 Outside Air, Return Air, and Relief Air Dampers

Outside air, return air and relief air dampers shall be provided where shown. Blades shall have interlocking edges and shall be provided with compressible seals at points of contact. The channel frames of the dampers shall be provided with jamb seals to minimize air leakage. Dampers shall not leak in excess of 102 L/s per square meter at 1017 Pa static pressure when closed. Seals shall be suitable for an operating temperature range of minus 40 to plus 94 degrees C. Dampers shall be rated at not less than 10 m/s air velocity.

2.6.3.2 Mechanical and Electrical Space Ventilation Dampers

Mechanical and electrical spare ventilation dampers shall be as shown. Dampers shall not leak in excess of 406 L/s per square meter at 1017 Pa static pressure when closed. Dampers shall be rated at not less than 7.6 m/s air velocity.

2.6.3.3 Smoke Dampers

Smoke-damper and actuator assembly required per NFPA 90A shall meet the Class II leakage requirements of UL 555S. Dampers shall be rated at not less than 10 m/s air velocity.

2.6.4 Damper End Switches

Each end switch shall be a hermetically sealed switch with a trip lever and over-travel mechanism. The switch enclosure shall be suitable for mounting on the duct exterior and shall permit setting the position of the trip lever that actuates the switch. The trip lever shall be aligned with the damper blade.

2.7 SMOKE DETECTORS

Duct smoke detectors shall be provided in supply and return air ducts in accordance with NFPA 90A. Duct smoke detectors shall conform to the requirements of UL 268A. Duct smoke detectors shall have perforated sampling tubes extended into the air duct. Detector circuitry shall be mounted in a metallic enclosure exterior to the duct. Detectors shall have manual reset. Detectors shall be rated for air velocities that include air flows between 2.5 and 20 m/s. Detectors shall be powered from the HVAC control panel. Detectors shall have two sets of normally open alarm contacts and two sets of normally closed alarm contacts. Detectors shall be connected to the building fire alarm panel for alarm initiation. A remote annunciation lamp and accessible remote reset switch shall be provided for duct detectors that are mounted eight feet or more above the finished floor and for detectors that are not readily visible. Remote lamps and switches as well as the affected fan unit(s) shall be properly identified in etched rigid plastic placards.

2.8 INSTRUMENTATION

2.8.1 Measurements

Transmitters shall be calibrated to provide the following measurements, over the indicated ranges, for an output of 4 to 20 mAdc:

a. Conditioned space temperature, from 10 to 30 degrees C.

b. Duct temperature, from 5 to 60 degrees C except that return-air temperature for economizer operation shall be minus 35 to plus 55 degrees C.

c. High-temperature hot-water temperature, from 94 to 260 degrees C.

d. Chilled-water temperature, from minus 1 to plus 38 degrees C.

e. Dual-temperature water, from minus 1 to plus 116 degrees C.

f. Heating hot-water temperature, from 38 to 121 degrees C.

g. Condenser-water temperature, from minus 1 to plus 55 degrees C.

h. Outside-air temperature, from minus 35 to plus 55 degrees C.

i. Relative humidity, 0 to 100 percent for space and duct high-limit applications.

2.8.2 Temperature Instruments

2.8.2.1 Resistance Temperature Detectors (RTD)

Temperature sensors shall be 100 ohms 3- or 4-wire RTD. Each RTD shall be platinum with a tolerance of plus or minus 0.1 percent at 0 degrees C, and shall be encapsulated in epoxy, series 300 stainless steel, anodized aluminum, or copper. Each RTD shall be furnished with an RTD transmitter as specified, integrally mounted unless otherwise shown.

2.8.2.2 Continuous Averaging RTD

Continuous averaging RTDs shall have a tolerance of plus or minus 0.5 degrees C at the reference temperature, and shall be of sufficient length to ensure that the resistance represents an average over the cross section in which it is installed. The sensing element shall have a bendable copper sheath. Each averaging RTD shall be furnished with an RTD transmitter to match the resistance range of the averaging RTD.

2.8.2.3 RTD Transmitter

The RTD transmitter shall match the resistance range of the RTD. The transmitter shall be a 2-wire, loop powered device. The transmitter shall produce a linear 4-to-20 mAdc output corresponding to the required temperature measurement. The output error shall not exceed 0.1 percent of the calibrated measurement.

2.8.3 Relative Humidity Instruments

A relative-humidity instrument for indoor application shall have a measurement range from 0 to 100 percent relative-humidity and be rated for operation at ambient air temperatures within the range of minus 4 to plus 55 degrees C. It shall be capable of being exposed to a condensing air stream (100 percent RH) with no adverse effect to the sensor's calibration or other harm to the instrument. The instrument shall be of the wall-mounted or duct-mounted type, as required by the application, and shall be provided with any required accessories. Instruments used in duct high-limit applications shall have a bulk polymer resistive sensing element. Duct-mounted instruments shall be provided with a duct probe designed to protect the sensing element from dust accumulation and mechanical damage. The instrument (sensing element and transmitter) shall be a two-wire, loop-powered device and shall have an accuracy of plus or minus 3 percent of full scale within the range of 20 to 80 percent relative humidity. The instrument shall have a typical long-term stability of 1 percent or less drift per year. The transmitter shall convert the sensing element's output to a linear 4-20 mAdc output signal in proportion to the measured relative-humidity value. The transmitter shall include offset and span adjustments.

2.8.4 Omitted

2.8.5 Omitted

2.8.6 Differential Pressure Instruments

The instrument shall be a pressure transmitter with an integral sensing element. The instrument over pressure rating shall be 300 percent of the operating pressure. The sensor/transmitter assembly accuracy shall be plus or minus 2 percent of full scale. The transmitter shall be a two-wire, loop-powered device. The transmitter shall produce a linear 4-to-20 mAdc output corresponding to the required pressure measurement.

2.8.7 Thermowells

Thermowells shall be Series 300 stainless steel with threaded brass plug and chain, 50 mm lagging neck and extension type well. Inside diameter and insertion length shall be as required for the application.

2.8.8 Sunshields

Sunshields for outside air temperature sensing elements shall prevent the sun from directly striking the temperature sensing elements. The sunshields shall be provided with adequate ventilation so that the sensing element responds to the ambient temperature of the surroundings. The top of each sunshield shall have a galvanized metal rainshield projecting over the face of the sunshield. The sunshields shall be painted white.

2.9 THERMOSTATS

2.9.1 General

Thermostat ranges shall be selected so that the setpoint is adjustable between plus or minus 5 degrees C of the setpoint shown. Thermostats shall be electronic or electric.

2.9.2 Nonmodulating Room Thermostats

Contacts shall be single-pole double-throw (SPDT), hermetically sealed, and wired to identified terminals. Maximum differential shall be 3 degrees C. Room thermostats shall be enclosed with separate locking covers (guards).

2.9.3 Omitted

2.9.4 Omitted

2.9.5 Omitted

2.9.6 Freezestats

Freezestats shall be manual reset, low temperature safety thermostats, with NO and NC contacts and a 6000 mm element which shall respond to the coldest 450 mm segment.

2.10 PRESSURE SWITCHES AND SOLENOID VALVES

2.10.1 Pressure Switches

Each switch shall have an adjustable setpoint with visible setpoint scale. Range shall be as shown. Differential adjustment shall span 20 to 40 percent of the range of the device.

2.10.2 Differential-Pressure Switches

Each switch shall be an adjustable diaphragm-operated device with two SPDT contacts, with taps for sensing lines to be connected to duct pressure fittings designed to sense air pressure. These fittings shall be of the angled-tip type with tips pointing into the air stream. The setpoint shall not be in the upper or lower quarters of the range and the range shall not be more than three times the setpoint. Differential shall be a maximum of 35 Pa at the low end of the range and 85 Pa at the high end of the range.

2.11 INDICATING DEVICES

2.11.1 Thermometers

2.11.1.1 Piping System Thermometers

Piping system thermometers shall have brass, malleable iron or aluminum alloy case and frame, clear protective face, permanently stabilized glass tube with indicating-fluid column, white face, black numbers, and a 230 mm scale. Thermometers for piping systems shall have rigid stems with straight, angular, or inclined pattern.

2.11.1.2 Piping System Thermometer Stems

Thermometer stems shall have expansion heads as required to prevent breakage at extreme temperatures. On rigid-stem thermometers, the space between bulb and stem shall be filled with a heat-transfer medium.

2.11.1.3 Nonaveraging Air-Duct Thermometers

Air-duct thermometers shall have perforated stem guards and 45-degree adjustable duct flanges with locking mechanism.

2.11.1.4 Averaging Air-Duct Thermometers

Averaging thermometers shall have a 90 mm (nominal) dial, with black legend on white background, and pointer traveling through a 270-degree arc.

2.11.1.5 Accuracy

Thermometers shall have an accuracy of plus or minus 1 percent of scale range. Thermometers shall have a range suitable for the application.

2.11.2 Pressure Gauges

Gauges shall be 50 mm (nominal) size, back connected, suitable for field or panel mounting as required, shall have black legend on white background, and shall have a pointer traveling through a 270-degree arc. Accuracy shall be plus or minus 3 percent of scale range. Gauges shall meet requirements of ASME B40.1.

2.11.2.1 Omitted

2.11.2.2 Omitted

2.11.2.3 Hydronic-System Gauges

Gauges for hydronic-system applications shall have ranges and graduations as shown.

2.11.3 Low Differential Pressure Gauges

Gauges for low differential pressure measurements shall be a minimum of 90 mm (nominal) size with two sets of pressure taps, and shall have a diaphragm-actuated pointer, white dial with black figures, and pointer zero adjustment. Gauges shall have ranges and graduations as shown. Accuracy shall be plus or minus 2 percent of scale range.

2.12 CONTROL DEVICES AND ACCESSORIES

2.12.1 Relays

Control relay contacts shall have utilization category and ratings selected for the application, with a minimum of two sets of contacts (two normally open, two normally closed) enclosed in a dustproof enclosure. Relays shall be rated for a minimum life of one million operations. Operating time shall be 20 milliseconds or less. Relays shall be equipped with coil transient suppression devices to limit transients to 150 percent of rated coil voltage. Time delay relays shall be 2PDT with 8-pin connectors, dust cover, and a matching rail-mounted socket. Adjustable timing range shall be 0 to 5 minutes. Power consumption shall not be greater than 3 watts.

2.12.2 Omitted

2.12.3 Watthour Meters

Watthour meters shall be in accordance with ANSI C12.1 and shall have pulse initiators for remote monitoring of watthour consumption. Pulse initiators shall consist of contacts (one normally open, one normally closed) with a current rating not to exceed 2 amperes and voltage not to exceed 500 V, with combinations of VA not to exceed 100 VA, and a life rating of one billion operations. Pulse initiator contacts shall be connected to a terminal strip external to the meter enclosure. Meter sockets shall be in accordance with ANSI C12.1.

2.12.4 Watthour Transducers

Watthour transducers shall have an accuracy of plus or minus 0.25 percent of full scale for kW and kWh outputs from full lag to full lead power factor. Input ranges for kW and kWh transducers shall be selectable without requiring the changing of current or potential transformers. The output shall be 4 to 20 mAdc.

2.12.5 Power-Line Conditioners (PLC)

PLCs shall be furnished for each DDC panel. The PLCs shall provide both voltage regulation and noise rejection. The PLCs shall be of the ferro-resonant design, with no moving parts and no tap switching, while electrically isolating the secondary from the power-line side. The PLCs shall be sized for 125 percent of the actual connected kVA load. Characteristics of the PLC shall be as follows:

a. At 85 percent load, the output voltage shall not deviate by more than plus or minus 1 percent of nominal when the input voltage fluctuates between minus 20 percent to plus 10 percent of nominal.

b. During load changes of zero to full load, the output voltage shall not deviate by more than plus or minus 3 percent of nominal voltage. Full correction of load switching disturbances shall be accomplished within 5 cycles, and 95 percent correction shall be accomplished within 2 cycles of the onset of the disturbance.

c. Total harmonic distortion shall not exceed 3-1/2 percent at full load.

2.13 OMITTED

2.14 FIELD HARDWARE

2.14.1 Direct Digital Control (DDC) Panel Hardware

DDC controls shall be standard products of STAEFA CONTROL SYSTEMS, INC. DDC panels shall be microcomputer based with sufficient memory to perform specified DDC panel functions and operations. The panel shall not be dependent on logic or data from an external computer. The panel shall contain necessary I/O functions to connect to field sensors and control devices. The DDC panel shall include:

a. Main power switch.

b. Power on indicator.

c. Portable tester connector.

d. On-Off-Auto switches for each digital output. The status of these switches will be available to the DDC panel for further processing.

e. Minimum-Maximum-Auto switches, or Auto-Manual switches with manual potentiometer, for each analog output. The status of these switches will be available to the DDC panel for further processing.

2.14.1.1 Sealed Battery Backup

A sealed battery backup for the DDC panel memory and real time clock function sufficient to maintain them for a minimum period of 8 hours shall be provided. Automatic charging of batteries shall be provided, or alternately, lithium batteries sized to provide a minimum of 30 days operation and a shelf life of 2 years shall be provided. A low battery alarm with indication for each DDC panel shall be provided. Alternatively, capacitors may be provided to maintain memory and clock function for a minimum of 8 hours.

2.14.1.2 Electrical Service Outlet for use with Test Equipment

A single phase, 120 Vac electrical service outlet for use with test equipment shall be furnished either inside or within 2 m of the DDC panel enclosure.

2.14.1.3 Locking Type Mounting Cabinets

Locking type mounting cabinets, with common keying and door switch wired to and DDC panel input for intrusion alarm annunciation, shall be furnished.

2.14.1.4 Failure Mode

Upon failure of the DDC panel, all connected points shall be forced to the failure mode shown in the I/O summary tables.

2.14.1.5 Portable Tester

Provisions for connection of a portable tester shall be furnished at each DDC panel location.

2.14.1.6 I/O Functions

I/O functions shall be provided as part of the DDC panel and shall be in accordance with the following:

a. The Analog Input (AI) function shall monitor each analog input, perform A-to-D conversion, and hold the digital value in a buffer for interrogation. The A-to-D conversion shall have a minimum resolution of 10 bits plus sign. Signal conditioning shall be provided for each analog input. Analog inputs shall be individually calibrated for zero and span, in hardware or in software. The AI shall incorporate common mode noise rejection of 50 dB from 0 to 100 Hz for differential inputs, and normal mode noise rejection of 20 dB at 60 Hz from a source impedance of 10,000 ohms. Input ranges shall be within the range of 4-20 mAdc.

b. The Analog Output (AO) function shall accept digital data, perform D-to-A conversion, and output a signal within the range of 4-20 mAdc. D-to-A conversion shall have a minimum resolution of 8 bits plus sign. Analog outputs shall be individually calibrated for zero and span. Short circuit protection on voltage outputs and open circuit protection on current outputs shall be provided. An individual gradual switch for manual override of each analog output and means of physically securing access to these switches shall be provided. Each AO shall have a 3-position switch for selection of the DDC control signal, no control, or a locally generated control signal for connection to the controlled device. Feedback shall be provided to the system as to the status of the output (manual control or automatic). Switches for pneumatic control outputs shall provide a connection for an externally generated pneumatic signal. All switches shall be either of a key operated design with the same keying system used for other outputs or otherwise suitably protected from unauthorized access.

c. The Digital Input (DI) function shall accept on-off, open-close, or other change of state (two state data) indications. Isolation and protection against an applied steady-state voltage up to 180 Vac peak shall be provided.

d. The Digital Output (DO) function shall provide contact closures for momentary and maintained operation of output devices. Closures shall have a minimum duration of 0.1 second. DO relays shall have an initial breakdown voltage between contacts and coil of at least 500 V peak. Electromagnetic

interference suppression shall be furnished on all output lines to limit transients to nondamaging levels. Protection against an applied steady-state voltage up to 180 Vac peak shall be provided. Minimum contact rating shall be 1 ampere at 24 Vac. Key locked HOA switches shall be provided for manual override of each digital output. Feedback shall be provided to the system as to the status of the output (manual control or automatic). All switches shall be common keyed.

e. The pulse accumulator function shall have the same characteristics as the DI. In addition, a buffer shall be provided to totalize pulses and allow for interrogation by the DDC panel. The pulse accumulator shall accept rates up to 20 pulses per second. The totalized value shall be reset to zero upon operator's command.

f. Signal conditioning for sensors shall be provided as specified.

2.15 TERMINAL UNIT CONTROLS

Terminal unit controls shall consist of individual unitary controllers which shall be fully interfaced to the control system through dedicated DDC panels. Terminal unit controls shall meet the requirements of UL 916 and 47 CFR 15. Terminal unit controls shall include a space temperature sensing element with occupant setpoint adjustment. Terminal unit controls shall have dual setpoints, one for heating and one for cooling. Terminal unit controls shall operate the fan and the cooling coil valve for cooling. Terminal unit controls shall operate the fan and either the heating coil valve or the finned tube radiator control valve for heating.

2.16 COMMAND ENTRY DEVICE

A command entry device shall be provided for use with DDC panels. The command entry device shall include a keyboard and display for local programming and setup. A printer and disk system shall also be provided. The command entry device shall be provided with communications interfaces to each DDC panel, and shall:

a. Allow for entry of database information, including parameters and constraints from the keyboard.

b. Display any digital, analog, and pulse accumulator input.

c. Control any digital and analog output.

d. Provide operator interface in alphanumeric and decimal.

e. Disable/enable any DDC panel.

2.16.1 Communications

A port and proper cabling shall be provided to allow for communications between the command entry device and the DDC panel.

2.16.2 Keyboard

A keyboard shall be furnished with the command entry device panel. The keyboard shall include a 64-character standard ASCII character set based on ANSI X3.64 and ANSI X3.154. The keyboard shall also include a 10-key numeric keypad and a minimum of 10 programmable function keys. A mouse or light

pen shall also be provided. The keyboard and mouse shall provide a means for the operator to interact with all command and applications software.

2.16.3 Printer

A printer shall be provided for use with the command entry device. It shall have a minimum 96 character standard ASCII character set. It shall have adjustable sprockets for paper width up to 381 mm and shall print at least 80 columns per line. The printer shall have a minimum speed of 200 characters per second in utility mode (draft quality) and 32 characters per second in near-letter quality mode. Print mode shall be switch or software selectable. The minimum character spacing shall be 0.394 characters per mm and 0.118 to 0.315 lines per mm. The printer shall utilize standard form size, sprocket-fed fanfold paper. The unit shall have programmable control of top-of-form and variable line skip capability.

2.16.4 Hard Disk

The command entry device shall include a hard disk system having a maximum average access time no greater than 12 milliseconds, and a minimum of 500 megabytes of formatted storage. The device shall allow each DDC panel database to be stored as a separate file suitable for transfer to floppy disk.

2.16.5 Floppy Disk

The command entry device shall include a 88.9 mm high density floppy disk system as part of the command entry device providing a minimum of 1.4 megabytes of formatted storage.

2.17 DDC PANEL PORTABLE TESTER

Either as part of the command entry device or as a separate portable device capable of connection to any DDC panel, a portable test device shall be provided which includes a keyboard, display, and mass storage sufficient to perform, as a minimum, the following functions through the portable tester:

a. Load all DDC panel software and information, including parameters and constraints.

b. Display the status or value of all points connected to the DDC panel.

c. Control the outputs connected to the DDC panel.

d. Perform DDC panel diagnostic testing.

e. Provide operator interface in alphanumerics and decimal (hexadecimal, octal, and binary display shall not be utilized).

f. Accept DDC panel software and information from the command entry device for subsequent loading into a specific DDC panel. Provide all necessary software and hardware required to support this function.

2.18 DELETED

2.19 COMMUNICATION EQUIPMENT

2.19.1 Communication Network

The DDC panel shall be equipped with hardware to allow for communication over Data Transmission Media (DTM) using the communication network as shown.

2.19.2 Dial Up MODEM

A type V.32 MODEM operating at 14,400 BPS with automatic/selectable fall back operation with automatic answer and automatic dial capability shall be connected to the control system and to the telephone system and shall be certified to meet the requirements of 47 CFR 68.

2.20 DIRECT DIGITAL CONTROL PANEL SOFTWARE

Each DDC panel, shall contain an operating system that controls and schedules that DDC panel's activities in real time. The DDC panel shall maintain a point database in its RAM that includes all parameters, constraints, and the latest value or status of all points connected to that DDC panel. The operating system shall include a real time clock function that maintains the seconds, minutes, hours, date and month, including day of the week. The operating system shall allow local loading of software and data files from the portable tester and from an operator interface panel.

2.20.1 Command Priorities

A scheme of priority levels shall be provided to prevent interaction of a command of low priority with a command of higher priority. The system shall require the latest highest priority command addressed to a single point to be stored for a period of time longer than the longest time constraint in the on and off states, ensuring that the correct command will be issued when the time constraint is no longer in effect or report the rejected command. Override command entered by the operator shall have higher priority than those emanating from application programs.

2.20.2 DDC Panel Startup

The DDC panel shall have startup software that causes automatic commencement of operation without human intervention, including startup of all connected I/O functions. A DDC panel restart program based on detection of power failure at the DDC panel shall be included in the DDC panel software. Upon restoration of power to the DDC panel, the program shall restart all equipment and restore all loads to the state at time of power failure, or to the state as commanded by time programs or other overriding programs. The restart program shall include start time delays between successive commands to prevent demand surges or overload trips. The startup software shall initiate operation of self-test diagnostic routines. Upon failure of the DDC panel and if the database and application software are no longer resident, or if the clock cannot be read, the DDC panel shall not restart and systems shall remain in the failure mode until the necessary repairs are made. If the database and application programs are resident, the DDC panel shall resume operation after an adjustable time delay of from 0 to 600 seconds. The startup sequence for each DDC panel shall include a unique time delay setting when system operation is initiated.

2.20.3 DDC Panel Operating Mode

Each DDC panel shall control and monitor all functions independent of communication with any other source. The software shall perform DDC panel functions and DDC panel resident application programs using data obtained from I/O functions and based upon the DDC panel real time clock function. The DDC panel software shall execute commands after performing constraint checks in the DDC panel.

2.20.4 DDC Panel Failure Mode

Upon failure for any reason, the system shall perform an orderly shutdown and force all DDC panel outputs to a predetermined state, consistent with the failure modes defined in the I/O summary tables and the associated controlled devices.

2.20.5 DDC Panel Functions

Software necessary to accomplish the following functions, as appropriate, fully implemented and operational, within the DDC panel shall be provided:

a. Scanning of inputs.

b. Control of outputs.

c. Store alarms for reporting when requested.

d. Maintain real time.

e. Execute DDC panel resident application programs.

f. Averaging or filtering of each analog input.

g. Constraint checks, prior to command issuance.

h. DDC panel diagnostics.

i. DDC panel portable tester operation.

2.20.6 Analog Monitoring

The DDC panel shall measure analog values and shall be capable of transmitting analog values for display. An analog change in value is defined as a change exceeding a preset differential value as specified. Displays and reports shall express analog values in proper engineering units with polarity sign. The system shall accommodate up to 255 different sets of engineering unit conversions. Each engineering unit conversion shall include range, span, and conversion equation.

2.20.7 Logic (Virtual) Points

Logic (virtual) points shall be software points entered in the point database which are not directly associated with a physical I/O function. This value shall be created by calculating it from any combination of digital and analog points, or other data. Logic points shall be analog or digital points having all the properties of real points, including alarms, without the associated hardware. Logic points shall be defined or calculated and entered into the database by the Contractor as required. The calculated analog point shall have point identification in the same format as any other analog point. The calculated point shall be

used in any program where the real value is not obtainable directly. Calculated point values shall be current for use by the system within 30 seconds of the time any input value changes.

2.20.8 I/O Point Definition

Each I/O point shall be defined in a database in the DDC panel. The definition shall include all physical parameters and constraints associated with each point.

2.20.9 Parameter Definition

Each I/O point shall be defined and entered into the database by the Contractor, including as applicable:

a. Name.

b. Device or sensor type (i.e., sensor, control, motors).

c. Point identifications number.

d. Area.

e. Sensor range.

f. Controller range.

g. Sensor span.

h. Controller span.

i. Engineering units conversion (scale factor).

j. High and low reasonableness value (analog).

k. High and low alarm limit (analog).

l. High and low alarm limit differential (return to normal).

m. Analog change differential (for reporting).

n. High accumulator limit (pulse).

o. Status description (digital inputs).

2.20.10 Alarm Processing

Each DDC panel shall have alarm processing software for digital, analog, and pulse accumulator alarms for all input and virtual points connected to that DDC panel.

2.20.10.1 Digital Alarms Definition

Digital alarms are those abnormal conditions indicated by digital inputs as specified in the I/O Summary Tables and elsewhere.

2.20.10.2 Analog Alarms Definition

Analog alarms are those conditions higher or lower than a defined value, as measured by an analog input as specified in the I/O Summary Tables and elsewhere. Analog readings shall be compared to predefined high and low limits, and alarmed each time a value enters or returns from a limit condition. Unique high and low limits shall be assigned to each analog point in the system. Analog alarm limits shall be stored in the DDC panel database. Each analog alarm limit shall have an associated unique limit differential specifying the amount by which a variable must return to the proper operating range before being declared as a return-to-normal state. Limits and differentials shall be entered on line by the operator in limits or the measured variable, without interruption or loss of monitoring of the point concerned.

2.20.10.3 Pulse Accumulator Alarms Definition

Pulse accumulator alarms are those conditions calculated from totalized values of accumulator inputs or pulse accumulator inputs rates that are outside defined limits as specified in the I/O Summary Tables and elsewhere. Pulse accumulator totalized values shall be compared to predefined limits and alarmed each time a value enters a limit condition. Unique limits shall be assigned to each pulse accumulator point in the system. Limits shall be stored in the DDC panel database.

2.20.10.4 Equipment Constraints Definitions

Each control point in the database shall have DDC panel resident constraints defined and entered by the Contractor, including as applicable:

a. Minimum off time.

b. Minimum on time.

c. High limit (value in engineering units).

d. Low limit (value in engineering units).

2.20.10.5 Constraint Checks

Control devices connected to the system shall have the DDC panel memory resident constraints checked before each command is issued to ensure that no equipment damage will result from improper operation. Each command shall be executed by the DDC panel only after all constraint checks have been passed. Each command point shall have unique constraints assigned. High and low "reasonableness" values or one differential "rate-of-change" value shall be assigned to each analog input. Values outside the reasonableness limits shall be rejected and an alarm generated. Status changes and analog point values shall be reported upon request, such as for reports, and application programs. Each individual point shall be capable of being selectively disabled by the operator. Disabling a point shall prohibit monitoring and automatic control of that point.

2.20.11 DDC Panel Diagnostics

Each DDC panel shall have self-test diagnostic routines implemented in firmware. The tests shall include routines that exercise memory. Diagnostic software shall be provided for use in the portable tester. The software shall display messages in plain language to inform the tester's operator of diagnosed problems.

2.20.12 Summer/Winter Operation Monitoring

The system shall provide software to change the operating parameters, monitoring of alarm limits, and start-stop schedules for each mechanical system where such a change from summer to winter and vice versa is meaningful. The software shall provide commands to application programs to coordinate summer or winter operation.

2.20.13 Control Sequences and Control Loops

Operator commands shall be used to create and execute control sequences and control loops for automated control of equipment based on operational parameters, including times and events, defined in the database. Through the command entry device, the system shall prompt the operator for information necessary to create, modify, list, and delete control sequences and Proportional-plus-Integral-plus Derivative (PID) control loops. The system shall prompt the operator for confirmation that the control sequence and control loop addition/modification/deletion is correct, prior to placing it in operation. Mathematic functions required shall be available for use in creating the control sequences and control loops. Sufficient spare memory shall be provided to allow 4 control sequences and 4 control loops in addition to those necessary to implement the requirements specified for each DDC panel. Each control sequence shall accommodate up to 8 terms or devices.

2.20.13.1 Control Functions

The DDC panel shall provide the following control functions:

a. PID Control

The system shall provide for PID control. The control algorithm intended for use shall be submitted for approval with a full explanation of its functions and limitations. A determination shall be made of the antiwindup limit for the DDC panel software (for example, an antiwindup limit of plus/minus one half of the actuator range).

b. Two Position Control

This function shall provide control for two state device control by comparing a setpoint against a process variable and an established deadband.

c. Floating Point Control

This function shall exercise control when an error signal exceeds a selected deadband, and shall maintain control until the error is within the deadband limits.

d. Signal Selection

This function shall allow the selection of the highest or lowest Engineering units from a group of analog values as the basis of control. The function shall include the ability to cascade analog values so that large numbers of inputs, up to a maximum of 20, can be reduced to one or two outputs.

e. Reset Function

This function shall develop an analog output based on up to two analog inputs and one operator specified reset schedule.

2.20.14 DDC Panel Resident Applications Software

2.20.14.1 General

The system shall perform all functions specified in the I/O summary tables by use of the appropriate applications programs. Application software shall be resident and executing in the DDC panel. All applications programs shall be coordinated, one with the other, to ensure that no conflicts or contentions remain unresolved. The Contractor shall coordinate the applications programs specified with the existing equipment and controls operation, and other requirements as shown.

2.20.14.2 Program Inputs

The Contractor shall select the appropriate program inputs listed for each application program to calculate the required program outputs. Where the specific program inputs are not available (for example) no status indication is called for on the I/O summary table, a default value shall be provided to replace the missing input, thus allowing the application program to be tested. All analog inputs to applications programs shall have an operator-adjustable deadband to preclude short cycling or hunting.

2.20.14.3 Scheduled Start-Stop Program

This program shall start and stop equipment based on both a time-of-day schedule for each day of the week and on a holiday schedule. To eliminate power surges, an operator-adjustable time delay shall be provided between consecutive start commands.

2.20.14.4 Optimum Start-Stop Program

This program shall start and stop equipment as specified for the scheduled start-stop program, but shall include a sliding schedule based on indoor and outdoor air conditions. The program shall take into account the thermal characteristics of the structure, and the indoor and outdoor air conditions; prediction software shall be used both to determine the minimum time of HVAC system operation needed to satisfy space environmental requirements at the start of the occupied cycle, and to determine the earliest time for stopping equipment at the day's end.

2.20.14.5 Duty Cycling Program

This program shall shut down equipment for predetermined periods of time during building occupied hours. Nominal off-times shall be decreased if space comfort temperature conditions are not satisfied; off-times shall be increased if space comfort temperature conditions remain satisfied.

2.20.14.6 Demand Limiting Program

This program shall utilize the sliding window interval method for shedding electrical loads to prevent exceeding an electrical demand peak value (target). The program shall continuously monitor power demand; using prediction software, the program shall calculate a predicted power demand. When the

predicted power demand exceeds a preset desired target, the program shall shut off electrical loads on a prescheduled priority basis to reduce the connected load before the actual peak exceeds the target. The peak demand value shall be calculated at a minimum of 1-minute intervals.

2.20.14.6.1 Priority Levels of Loads

The demand limiting program shall provide eight priority levels of loads. All loads in the lowest priority level shall be shed before loads in the next higher priority level. Loads shed within a priority level shall be rotated automatically, subject to equipment constraints, to avoid any one load from always being shed first. Loads shed first within a priority level shall be restored first. All loads shed in the highest priority level shall be restored before loads in lower priority levels.

2.20.14.6.2 Compatibility with Time-of-Day Metering

The demand program shall be compatible with future time-of-day metering. The program shall permit a minimum of six individually definable time-of-day demand periods in 24 hours.

2.20.14.7 Day-Night Setback Program

The software shall limit the rise or drop of space temperature during unoccupied hours. Whenever the space temperature is above (or below for heating) the operator-assigned temperature limit, the system shall be turned on until the temperature is within the assigned temperature limit.

2.20.14.8 Economizer Program

The software shall reduce the HVAC system cooling requirements when the OA dry bulb temperature is less than the return air temperature. When the OA dry bulb temperature is above the return air temperature or changeover setpoint, the OA dampers, return air dampers, and relief air dampers shall be positioned to provide minimum required OA. When the OA dry bulb temperature is below a changeover setpoint temperature, the OA dampers, return air dampers, and exhaust air dampers shall be positioned to maintain the required mixed air temperature.

2.20.14.9 Ventilation-Recirculation Program

The software shall reduce the HVAC system thermal load during warmup or cooldown cycles prior to occupancy of the building and during day/night setback operations. The OA damper shall remain closed for warmup and cooldown cycles occurring during day-night setback periods. During summer cooldown cycle operation, when the OA temperature is cooler than the space temperature, the OA and exhaust air dampers shall be allowed to open. During winter warmup cycle operation, when the OA temperature is warmer than space temperature, the OA and exhaust air dampers shall be allowed to open. The OA damper and exhaust air damper shall be closed during the unoccupied mode at all other times.

2.20.14.10 Hot Deck-Cold Deck Temperature Reset Program

The software shall reset the hot deck-cold deck temperatures in dual duct and multizone HVAC systems. The program shall select the zone with the greatest heating and cooling requirements, and establish the HVAC minimum hot and cold deck temperature differentials required to meet the zone temperatures.

2.20.14.11 Reheat Coil Reset Program

The software shall select the zone with the least amount of heat required. The program shall reset the cold deck discharge temperature upward until it satisfies the zone with the lowest demand, or until the zone humidity control requirements cannot be met.

2.20.14.12 Steam Boiler Selection Program

Based on boiler operating data, the software shall select the most efficient steam boiler or combination of boilers. Using fuel input vs. steam output data, the boiler with the highest efficiency shall be selected to satisfy the predicted heating load calculated by prediction software as specified.

2.20.14.13 Hot Water Boiler Selection Program

Based on boiler operating data, the software shall select the most efficient hot water boiler or combination of boilers. Using fuel input vs. hot water output data, the boiler with the highest efficiency shall be selected to satisfy the heating load calculated by prediction software as specified.

2.20.14.14 Hot Water OA Reset Program

The software shall reset the hot water temperature supplied by the boiler or converter in accordance with the OA temperature. The hot water supply temperature shall be reset downward or upward from a fixed temperature proportionally, as a function of OA temperature.

2.20.14.15 Chiller Selection Program

Based on chiller operating data, the software shall select the most efficient chiller or combination of chillers. Using energy input vs. chilled water output data, the chiller with the highest efficiency shall be selected to satisfy the cooling load calculated by prediction software. The program shall prevent the chiller from going to full load for a predetermined period; this will allow the system to stabilize in order to determine the actual cooling load. The program shall follow the chiller manufacturer's startup and shutdown sequence requirements. Interlocks between chilled water pumps, condenser water pumps, and chiller shall be in accordance with the chiller manufacturer's requirements.

2.20.14.16 Chiller Water Temperature Reset Program

The software shall reset the chilled water temperature supplied by a water chiller. The program shall reset the chilled water temperature upward or downward to meet the required space temperature or humidity setpoints. The program shall monitor the positions of the chilled water control valves (percent of opening) or space temperatures.

2.20.14.17 Condenser Water Temperature Reset Program

The software shall reset the condenser water temperature from a fixed temperature downward when the OA wet bulb temperature will produce lower condenser water temperature.

2.20.14.18 Chiller Demand Limit Program

The software shall limit maximum available chiller cooling capacity in fixed steps to limit electrical demand. Each fixed step shall be considered as one point in the demand limiting program. Each chiller demand control step shall be assigned an equipment priority level.

2.20.14.19 Lighting Control Program

The software shall turn lights off based on the time of day and the day of week, including holidays. The program shall generate additional commands at operator adjustable intervals to assure that lights are off (relay operated zoned lighting only).

2.20.14.20 Remote Boiler Monitoring and Control

The software shall remotely monitor and control boiler operation based on boiler operational data. The program shall monitor all inputs and discontinue boiler operation if any monitored point exceeds a predetermined value or changes status incorrectly. The operator shall be able to add or delete individual points from the list of points that will discontinue boiler operation.

2.20.15 Communication Programs

The DDC panels shall be equipped with hardware and software drivers and handlers which allow for communication with a HSQ TECHNOLOGY base-wide EMCS/UMCS via fiber optic cable. Each communication program module shall be functionally independent of other Contractor-furnished software, to allow for future upgrade or replacement of communication modules without affecting other application programs and other software modules.

PART 3 EXECUTION

3.1 GENERAL INSTALLATION CRITERIA

3.1.1 HVAC Control System

The HVAC control system shall be completely installed and ready for operation. Dielectric isolation shall be provided where dissimilar metals are used for connection and support. Penetrations through and mounting holes in the building exterior shall be made watertight. The HVAC control system installation shall provide clearance for control system maintenance by maintaining access space between coils, access space to mixed-air plenums, and other access space required to calibrate, remove, repair, or replace control system devices. The control system installation shall not interfere with the clearance requirements for mechanical and electrical system maintenance.

3.1.2 Software Installation

Software shall be loaded for an operational system, including databases for all points, operational parameters, and system, command, and application software. The Contractor shall provide original and backup copies of source, excluding the general purpose operating systems and utility programs furnished by computer manufacturers and the non-job-specific proprietary code furnished by the system manufacturer, and object modules for all software on each type of media utilized, within 30 days of formal Government acceptance. In addition, a copy of individual floppy disks of all software for each DDC panel shall be provided.

3.1.3 Device-Mounting Criteria

Devices mounted in or on piping or ductwork, on building surfaces, in mechanical/electrical spaces, or in occupied space ceilings shall be installed in accordance with manufacturer's recommendations and as shown. Control devices to be installed in piping and ductwork shall be provided with all required gaskets,

flanges, thermal compounds, insulation, piping, fittings, and manual valves for shutoff, equalization, purging, and calibration. Strap-on temperature sensing elements shall not be used except as specified.

3.1.4 Wiring Criteria

Wiring external to control panels, including low-voltage wiring, shall be installed in metallic raceways. Wiring shall be installed without splices between control devices and DDC panels. Instrumentation grounding shall be installed as necessary to prevent ground loops, noise, and surges from adversely affecting operation of the system. Ground rods installed by the contractor shall be tested as specified in IEEE Std 142. Cables and conductor wires shall be tagged at both ends, with the identifier shown on the shop drawings, in accordance with the requirements of Section 16415 ELECTRICAL WORK, INTERIOR. Other electrical work shall be as specified in Section 16415 ELECTRICAL WORK, INTERIOR and as shown.

3.2 CONTROL-SYSTEM INSTALLATION

3.2.1 Damper Actuators

Actuators shall not be mounted in the air stream. Multiple actuators operating a common damper shall be connected to a common drive shaft. Actuators shall be installed so that their action shall seal the damper to the extent required to maintain leakage at or below the specified rate and shall move the blades smoothly.

3.2.2 Omitted

3.2.3 Room-Instrument Mounting

Room instruments shall be mounted so that their sensing elements are 1.5 m above the finished floor unless otherwise shown. Temperature setpoint device shall be recess mounted.

3.2.4 Freezestats

For each 2 square meters of coil-face area, or fraction thereof, a freezestat shall be provided to sense the temperature at the location shown. Manual reset freezestats shall be installed in approved, accessible locations where they can be reset easily. The freezestat sensing element shall be installed in a serpentine pattern.

3.2.5 Averaging-Temperature Sensing Elements

Sensing elements shall have a total element minimum length equal to 3 m per square meter of duct cross-sectional area.

3.2.6 Foundations and Housekeeping Pads

Foundations and housekeeping pads shall be provided for the HVAC control system air compressors.

3.2.7 Omitted

3.2.8 Omitted

3.2.9 Indication Devices Installed in Piping and Liquid Systems

Gauges in piping systems subject to pulsation shall have snubbers. Gauges for steam service shall have pigtail fittings with cock. Thermometers and temperature sensing elements installed in liquid systems shall be installed in thermowells.

3.3 CONTROL SEQUENCES OF OPERATION

3.3.1 General Requirements - HVAC Systems

These requirements shall apply to all primary HVAC systems unless modified herein. The sequences describe the actions of the control system for one direction of change in the HVAC process analog variable, such as temperature, humidity or pressure. The reverse sequence shall occur when the direction of change is reversed.

3.3.1.1 Supply Fan Operating

HVAC system outside-air, return-air, and relief-air dampers shall function as described for specific modes of operation. Interlocked exhaust fans shall be stopped in the unoccupied and ventilation delay modes and their dampers shall be closed. Interlocked exhaust fans shall run in the occupied mode, and their dampers shall open. Cooling-coil control valves and cooling-coil circulating pumps shall function as described for the specific modes of operation. Heating coil valves shall be under control.

3.3.1.2 Supply Fan Not Operating

When an HVAC system is stopped, all interlocked fans shall stop, the outside-air and relief-air dampers shall close, the return-air damper shall open, all stages of direct-expansion cooling shall stop, the system shall pump down if it has a pump down cycle, all humidification shall stop, and all cooling-coil valves for coils located indoors shall close to the coil. Cooling-coil valves of units located outdoors shall open to the coil. Heating-coil valves shall remain under control.

3.3.1.3 Hydronic Heating - Distribution Pump Operating

Hydronic heat-exchanger valves shall be under control.

3.3.1.4 Hydronic Heating - Distribution Pump Not Operating

Hydronic heat-exchanger valves shall close.

3.3.2 Omitted

3.3.3 Unit Heater and Cabinet Unit Heater

All Modes - A wall-mounted thermostat with an "AUTO-OFF" switch located as shown, shall cycle the fan to maintain its setpoint as shown when the switch is in the "AUTO" position. When the switch is in the "OFF" position, the fan shall be stopped.

3.3.4 Omitted

3.3.5 Omitted

3.3.6 Fan Coil Units

Cooling mode - The fan shall run continuously on high speed and the cooling coil valve shall be modulated to maintain the setpoint as shown.

Heating mode - The fan shall run continuously on low speed and the heating coil valve or the fin tube radiator valve shall be modulated to maintain the setpoint as shown.

3.3.7 Omitted

3.3.8 Omitted

3.3.9 Hydronic Systems

3.3.9.1 Heating and cooling modes of operation will be enabled/disabled by commands issued from the basewide EMCS system.

3.3.9.2 Upon receiving a heating mode Aenable@ command from the EMCS system, the DDC system shall start the primary hot water pump and modulate the converter high-temperature hot-water control valve to maintain the setpoint in the hydronic-heating supply line. Upon receiving a heating mode Adisable@ command from the EMCS system, the DDC system shall stop the primary hot water pump and the converter high-temperature hot-water control valve shall close. Operation of the primary and standby pumps shall be alternated to equalize run-times.

3.3.9.3 Upon receiving a cooling mode Aenable@ command from the EMCS system, the DDC system shall start the primary chilled water pump and allow the chiller to operate under its own controls to maintain setpoint in the chilled water supply line. Upon receiving a cooling mode Adisable@ command from the EMCS system, the DDC system shall issue a stop command to the chiller. Once the chiller has completed its shut-down process, the chilled water pump shall stop. Operation of the primary and standby pumps shall be alternated to equalize run-times.

3.3.10 Omitted

3.3.11 Omitted

3.3.12 Omitted

3.3.13 Omitted

3.3.14 Omitted

3.3.15 Omitted

3.3.16 Omitted

3.3.17 Omitted

3.3.18 Omitted

3.3.19 Make-up air unit AHU-1

3.3.19.1 Occupied, and Unoccupied Modes of Operation

At the time shown, the DDC system shall place the system in the occupied mode. At the time shown, the DDC system shall place the control system in the unoccupied mode of operation.

3.3.19.2 Outside Air Damper

Occupied Mode - The outside air damper shall be open.

Unoccupied Mode - The outside air dampers shall be closed.

3.3.19.3 Fan Control

Occupied Mode - Supply fan AHU-1 and exhaust fan EF-1 shall start, and shall operate continuously.

Unoccupied Mode - The supply fan shall cycle according to the night setback schedule. The fan shall start and stop at the setpoints.

3.3.19.4 Filter

A differential pressure switch across the filter shall initiate a filter alarm when the pressure drop across the filter reaches the setpoint.

3.3.19.5 Freeze Protection

All Modes - A freezestat, located as shown, shall stop the supply fan, cause the outside-air damper to close, and shall initiate a low temperature alarm if the temperature drops below the freezestat's setpoint. Return to the normal mode of operation shall require manual reset at the freezestat. The DDC panel shall monitor the freezestat through auxiliary contacts and shall indicate an alarm condition when the freezestat trips.

3.3.19.6 Heating and Cooling Coils

Heating and cooling modes of operation will be enabled/disabled by commands issued from the basewide EMCS system. Upon receiving a heating mode enable command the heating coil valve shall be modulated to maintain setpoint. Upon receiving a cooling mode enable command the cooling coil valve shall be modulated to maintain setpoint.

3.3.19.7 Omitted

3.3.19.8 Omitted

3.3.19.9 Emergency Fan Shutdown

All Modes - A smoke detector in the supply-air ductwork shall stop the supply fan and initiate a smoke alarm if smoke is. Restarting the supply fan shall require manual reset at the smoke detector.

3.4 COMMISSIONING PROCEDURES

3.4.1 Evaluations

The Contractor shall make the observations, adjustments, calibrations, measurements, and tests of the control systems, set the time schedule, and make any necessary control-system corrections to ensure that the systems function as described in the sequence of operation.

3.4.1.1 Item Check

Signal levels shall be recorded for the extreme positions of each controlled device. An item-by-item check of the sequence of operation requirement shall be performed using Steps 1 through 4 in the specified control system commissioning procedures. Steps 1, 2, and 3 shall be performed with the HVAC system shut down; Step 4 shall be performed after the HVAC systems have been started. External input signals to the DDC panel (such as starter auxiliary contacts, and external systems) may be simulated in steps 1, 2, and 3. With each operational-mode signal change, DDC panel output relay contacts shall be observed to ensure that they function.

3.4.1.2 Weather-Dependent Test Procedures

Weather-dependent test procedures that cannot be performed by simulation shall be performed in the appropriate climatic season. When simulation is used, the actual results shall be verified in the appropriate season.

3.4.1.3 Two-Point Accuracy Check

A two-point accuracy check of the calibration of each HVAC control system sensing element and transmitter shall be performed by comparing the DDC panel readout to the actual value of the variable measured at the sensing element and transmitter or airflow measurement station location. Digital indicating test instruments shall be used, such as digital thermometers, motor-driven psychrometers, and tachometers. The test instruments shall be at least twice as accurate as the specified sensing element-to-DDC panel readout accuracy. The calibration of the test instruments shall be traceable to National Institute Of Standards And Technology standards. The first check point shall be with the HVAC system in the shutdown condition, and the second check point shall be with the HVAC system in an operational condition. Calibration checks shall verify that the sensing element-to-DDC panel readout accuracies at two points are within the specified product accuracy tolerances. If not, the device shall be recalibrated or replaced and the calibration check repeated.

3.4.1.4 Insertion and Immersion Temperatures

Insertion temperature and immersion temperature sensing elements and transmitter-to-DDC panel readout calibration accuracy shall be checked at one physical location along the axis of the sensing element.

3.4.1.5 Averaging Temperature

Averaging-temperature sensing element and transmitter-to-DDC panel readout calibration accuracy shall be checked every 600 mm along the axis of the sensing element in the proximity of the sensing element, for a maximum of 10 readings. These readings shall then be averaged.

3.4.2 Omitted

3.4.3 Unit Heater and Cabinet Unit Heater

The "OFF/AUTO" switch shall be placed in the "OFF" position. Each space-thermostat temperature setting shall be turned up so that it makes contact and turns on the unit heater fans. The unit heater fans shall not start. The "OFF/AUTO" switch shall be placed in the "AUTO" position. It shall be ensured that the unit-heater fans start. Each space thermostat temperature setting shall be turned down, and the unit-heater fans shall stop. The thermostats shall be set at their temperature setpoints. The results of testing of one of each type of unit shall be logged.

3.4.4 Omitted

3.4.5 Omitted

3.4.6 Fan Coil Unit

The heating/cooling mode shall be set to heating. It shall be verified that the fan is operating on low speed and that the heating coil or fin tube radiator valve is under control. Each space thermostat temperature setting shall be turned up and it shall be verified that the valve modulates to maintain setpoint. The heating/cooling mode shall be set to cooling. It shall be verified that the fan is operating on high speed and that the cooling coil valve is under control. Each space thermostat temperature setting shall be turned down and it shall be verified that the valve modulates to maintain setpoint. The thermostats shall be set at their temperature setpoints. The results of testing of one of each type of unit shall be logged.

3.4.7 Omitted

3.4.8 Omitted

3.4.9 Hydronic heating system

Steps for installation shall be as follows:

a. Step 1 - System Inspection: The HVAC system shall be observed in its shutdown condition. It shall be verified that power is available where required and that the converter valve is closed.

b. Step 2 - Calibration Accuracy Check with system shutdown: Readings shall be taken with a digital thermometer at each temperature sensing element location. Each temperature shall be read at the DDC panel, and the thermometer and DDC panel readings logged. The calibration accuracy of the sensing element-to-DDC panel readout for system temperatures shall be checked.

c. Step 3 - Actuator Range Adjustments: A signal shall be applied to the actuator through an operator entered value to the DDC panel. The proper operation of the actuators for all valves shall be verified. The signal shall be varied from live zero to full range, and it shall be verified that the actuators travel from zero stroke to full stroke within the signal range. It shall be verified that all sequenced actuators move from zero stroke to full stroke in the proper direction, and move the connected device in the proper direction from one extreme position to the other.

d. Step 4 - Control-System Commissioning:

(1) The 2-point calibration accuracy check of the sensing element-to-DDC panel readout for the system supply and return temperatures shall be performed. The system supply temperature setpoint shall be set for the temperature schedule as shown.

(2) The system shall be placed in the heating mode. It shall be verified that the primary hot water pump starts and that the converter valve is under control to maintain setpoint. A heating mode Adisable command shall be issued and it shall be verified that the pump stops and the converter valve closes. Another heating mode Aenable@ command shall be issued and it shall be verified that the standby pump starts, with the valve under control.

3.4.10 Hydronic cooling system

Steps for installation shall be as follows:

a. Step 1 - System Inspection: The HVAC system shall be observed in its shutdown condition. It shall be verified that power is available where required.

b. Step 2 - Calibration Accuracy Check with system shutdown: Readings shall be taken with a digital thermometer at each temperature sensing element location. Each temperature shall be read at the DDC panel, and the thermometer and DDC panel readings logged. The calibration accuracy of the sensing element-to-DDC panel readout for system temperatures shall be checked.

c. Step 3 - Actuator Range Adjustments: A signal shall be applied to the actuator through an operator entered value to the DDC panel. The proper operation of the actuators for all valves shall be verified. The signal shall be varied from live zero to full range, and it shall be verified that the actuators travel from zero stroke to full stroke within the signal range. It shall be verified that all sequenced actuators move from zero stroke to full stroke in the proper direction, and move the connected device in the proper direction from one extreme position to the other.

d. Step 4 - Control-System Commissioning:

(1) The 2-point calibration accuracy check of the sensing element-to-DDC panel readout for the system supply and return temperatures shall be performed. The system supply temperature setpoint shall be set for the temperature schedule as shown.

(2) The system shall be placed in the cooling mode. It shall be verified that the primary chilled water pump starts and that the chiller starts and is under control to maintain setpoint. A cooling mode Adisable command shall be issued and it shall be verified that the chiller shuts down and the pump stops. Another cooling mode Aenable@ command shall be issued and it shall be verified that the standby pump starts.

3.4.11 Omitted

3.4.12 Omitted

3.4.13 Omitted

3.4.14 Omitted

3.4.15 Omitted

3.4.16 Omitted

3.4.17 Omitted

3.4.18 Omitted

3.4.19 Make-up air unit AHU-1

Steps for installation shall be as follows:

a. Step 1 - System Inspection: The HVAC system shall be verified in its shutdown condition. The system shall be checked to see that power is available where required and that the outside-air damper is closed.

b. Step 2 - Calibration Accuracy Check with HVAC System Shutdown:
Readings shall be taken with a digital thermometer at each temperature sensing element location. Each temperature shall be read at the DDC panel, and the thermometer and DDC panel display readings logged. The calibration accuracy of the sensing element-to-DDC panel readout for supply-air temperature shall be checked.

c. Step 3 - Actuator Range Adjustments: A signal shall be applied to the actuator through an operator entered value at the DDC panel. The proper operation of the actuators for all dampers and valves shall be visually verified. The signal shall be varied from live zero to full range, and the actuator travel from zero stroke to full stroke within the signal range shall be verified. It shall be verified that all sequenced and parallel-operated actuators move from zero stroke to full stroke in the proper direction, and move the connected device in the proper direction from one extreme position to the other.

d. Step 4 - Control-System Commissioning:

(1) With the fan ready to start, the system shall be placed in the occupied mode, and it shall be verified that supply fan AHU-1 and exhaust fan EF-1 start. It shall be verified that the outside-air damper is open, and the heating-coil and cooling-coil valves are under control, by simulating a change in the supply temperature through an operator entered value.

(2) An unoccupied mode signal shall be applied, and it shall be verified that the HVAC system shuts down, and the control system assumes the specified shutdown conditions. The space temperature shall be artificially changed to below the night setback temperature setpoint, and it shall be verified that the HVAC system starts; the space temperature shall be set to above the night setback setpoint, and it shall be verified that the HVAC system stops. The night setback temperature setpoint shall be set at the setpoint as shown.

(3) With the HVAC system running, a filter differential-pressure switch input signal shall be simulated, at the device. It shall be verified that the filter alarm is initiated. The differential pressure switch shall be set at the setpoint.

(4) With the HVAC system running, a freezestat trip input signal shall be simulated, at the device. HVAC system shutdown shall be verified. It shall be verified that a low temperature alarm is initiated. The freezestat shall be set at the setpoint. The HVAC system shall be restarted by manual restart and it shall be verified that the alarm returns to normal.

(5) With the HVAC system running, a smoke detector trip input signal at each detector shall be simulated, and control-device actions and interlock functions as described in the Sequence of Operation shall be verified. Simulation shall be performed without false alarming any Life Safety systems. It shall be verified that the HVAC system shuts down and that the smoke detector alarm is initiated. The detectors shall be reset. The HVAC system shall be restarted by manual reset, and it shall be verified that the alarm returns to normal.

3.5 BALANCING, COMMISSIONING, AND TESTING

3.5.1 Coordination with HVAC System Balancing

Commissioning of the control system, except for tuning of controllers, shall be performed prior to or simultaneous with HVAC system balancing. The contractor shall tune the HVAC control system after all air-system and hydronic-system balancing has been completed, minimum damper positions set and a report has been issued.

3.5.2 Control System Calibration, Adjustments, and Commissioning

Control system commissioning shall be performed for each HVAC system, using test plans and procedures previously approved by the Government. The Contractor shall provide all personnel, equipment, instrumentation, and supplies necessary to perform commissioning and testing of the HVAC control system. All instrumentation and controls shall be calibrated and the specified accuracy shall be verified using test equipment with calibration traceable to NIST standards. Wiring shall be tested for continuity and for ground, open, and short circuits. Tubing systems shall be tested for leaks. Mechanical control devices shall be adjusted to operate as specified. HVAC control panels shall be pretested off-site as a functioning assembly ready for field connections, calibration, adjustment, and commissioning of the operational HVAC control system. Control parameters and logic (virtual) points including control loop setpoints, gain constants, and integral constraints, shall be adjusted before the system is placed on line. Communications requirements shall be as indicated. Written notification of any planned commissioning or testing of the HVAC Control systems shall be given to the Government at least 14 calendar days in advance.

3.5.3 Performance Verification Test

The Contractor shall demonstrate compliance of the HVAC control system with the contract documents. Using test plans and procedures previously approved by the Government, the Contractor shall demonstrate all physical and functional requirements of the project. The performance verification test shall show, step-by-step, the actions and results demonstrating that the control systems perform in accordance with the sequences of operation. The performance verification test shall not be started until after receipt by the Contractor of written permission by the Government, based on Government approval of the Commissioning Report and completion of balancing. The tests shall not be conducted during scheduled seasonal off-periods of base heating and cooling systems.

3.5.4 Endurance Test

The endurance test shall be used to demonstrate the specified overall system reliability requirement of the completed system. The endurance test shall not be started until the Government notifies the Contractor in writing that the performance verification test is satisfactorily completed. The Government may terminate the testing at any time when the system fails to perform as specified. Upon termination of testing by the Government or by the Contractor, the Contractor shall commence an assessment period as described for

Phase II. Upon successful completion of the endurance test, the Contractor shall deliver test reports and other documentation as specified to the Government prior to acceptance of the system.

a. Phase I (Testing)

The test shall be conducted 24 hours per day, 7 days per week, for 15 consecutive calendar days, including holidays, and the system shall operate as specified. The Contractor shall make no repairs during this phase of testing unless authorized by the Government in writing.

b. Phase II (Assessment)

After the conclusion of Phase I, the Contractor shall identify failures, determine causes of failures, repair failures, and deliver a written report to the Government. The report shall explain in detail the nature of each failure, corrective action taken, results of tests performed, and shall recommend the point at which testing should be resumed. After delivering the written report, the Contractor shall convene a test review meeting at the jobsite to present the results and recommendations to the Government. As a part of this test review meeting, the Contractor shall demonstrate that all failures have been corrected by performing appropriate portions of the performance verification test. Based on the Contractor's report and test review meeting, the Government may require that the Phase I test be totally or partially rerun. After the conclusion of any retesting which the Government may require, the Phase II assessment shall be repeated as if Phase I had just been completed.

3.5.5 Posted and Panel Instructions

Posted and Panel Instructions, showing the final installed conditions, shall be provided for each system. The posted instructions shall consist of laminated half-size drawings and shall include the control system schematic, equipment schedule, sequence of operation, wiring diagram, communication network diagram, and valve and damper schedules. The posted instructions shall be permanently affixed, by mechanical means, to a wall near the control panel. Panel instructions shall consist of laminated letter-size sheets and shall include a Routine Maintenance Checklist and as-built configuration check sheets. Panel instructions and one copy of the Operation and Maintenance Manuals, previously described herein, shall be placed inside each control panel or permanently affixed, by mechanical means, to a wall near the panel.

END OF SECTION

This page intentionally blank

****
THIS IS AN ENTIRELY REVISED SPECIFICATION SECTION 15990, ADDED BY AMENDMENT 0002, REPLACING EXISTING SPECIFICATION SECTION 15990.
****

SECTION 15990

TESTING, ADJUSTING, AND BALANCING OF HVAC SYSTEMS

PART 1 GENERAL

1.1 REFERENCES

The publications listed below form a part of this specification to the extent referenced. The publications are referred to in the text by basic designation only.

ASSOCIATED AIR BALANCE COUNCIL (AABC)

AABC MN-1	(1989) National Standards for Testing and Balancing Heating, Ventilating, and Air Conditioning Systems

NATIONAL ENVIRONMENTAL BALANCING BUREAU (NEBB)

NEBB Procedural Stds	(1991) Procedural Standards for Testing Adjusting Balancing of Environmental Systems

1.2 SUBMITTALS

Government approval is required for submittals with a "GA" designation; submittals having a "FIO" designation are for information only. The following shall be submitted in accordance with Section 01330 SUBMITTAL PROCEDURES:

SD-01 Data

TAB Related HVAC Submittals; FIO.

A list of the TAB Related HVAC Submittals, no later than 7 days after the approval of the TAB Specialist.

SD-04 Drawings

TAB Schematic Drawings and Report Forms; GA.

Three copies of the TAB Schematic Drawings and Report Forms, no later than 21 days prior to the start of TAB field measurements.

SD-06 Instructions

TAB Procedures; GA.

Proposed procedures for TAB, submitted with the TAB Schematic Drawings and Report Forms.

SD-07 Schedules

Systems Readiness Check; FIO.

Proposed date and time to begin the Systems Readiness Check, no later than 7 days prior to the start of the Systems Readiness Check.

TAB Execution; GA.

Proposed date and time to begin field measurements, making adjustments, etc., for the TAB Report, submitted with the Systems Readiness Check Report.

TAB Verification; GA.

Proposed date and time to begin the TAB Verification, submitted with the TAB Report.

SD-08 Statements

TAB Firm; GA.

Certification of the proposed TAB Firm's qualifications by either AABC or NEBB to perform the duties specified herein and in other related Sections, no later than 21 days after the Notice to Proceed. The documentation shall include the date that the Certification was initially granted and the date that the current Certification expires. Any lapses in Certification of the proposed TAB Firm or disciplinary action taken by AABC or NEBB against the proposed TAB Firm shall be described in detail.

TAB Specialist; GA.

Certification of the proposed TAB Specialist's qualifications by either AABC or NEBB to perform the duties specified herein and in other related Sections, no later than 21 days after the Notice to Proceed. The documentation shall include the date that the Certification was initially granted and the date that the current Certification expires. Any lapses in Certification of the proposed TAB Specialist or disciplinary action taken by AABC or NEBB against the proposed TAB Specialist shall be described in detail.

Instrument Calibration; FIO.

List of each instrument to be used during TAB, stating calibration requirements required or recommended by both the TAB Standard and the instrument manufacturer and the actual calibration history of the instrument, submitted with the TAB Procedures. The calibration history shall include dates calibrated, the qualifications of the calibration laboratory, and the calibration procedures used.

SD-09 Reports

Design Review Report; GA.

A copy of the Design Review Report, no later than 14 days after approval of the TAB Firm and the TAB Specialist.

Systems Readiness Check Report; GA.

A copy of completed checklists for each system, each signed by the TAB Specialist, at least 7 days prior to the start of TAB Execution. All items in the Systems Readiness Check Report shall be signed by the TAB Specialist and shall bear the seal of the Professional Society or National Association used as the TAB Standard.

TAB Report; GA.

Three copies of the completed TAB Reports, no later that 7 days after the execution of TAB. All items in the TAB Report shall be signed by the TAB Specialist and shall bear the seal of the Professional Society or National Association used as the TAB Standard.

TAB Verification Report; GA.

Three copies of the completed TAB Verification Report, no later that 7 days after the execution of TAB Verification. All items in the TAB Verification Report shall be signed by the TAB Specialist and shall bear the seal of the Professional Society or National Association used as the TAB Standard.

SD-13 Certificates

Ductwork Leak Testing; FIO.

A written statement signed by the TAB Specialist certifying that the TAB Specialist witnessed the Ductwork Leak Testing, it was successfully completed, and that there are no known deficiencies related to the ductwork installation that will prevent TAB from producing satisfactory results.

1.3 SIMILAR TERMS

In some instances, terminology differs between the Contract and the TAB Standard primarily because the intent of this Section is to use the industry standards specified, along with additional requirements listed herein to produce optimal results. The following table of similar terms is provided for clarification only. Contract requirements take precedent over the corresponding AABC or NEBB requirements where differences exist.

SIMILAR TERMS

Contract Term	AABC Term	NEBB Term
TAB Standard	National Standards for Testing and Balancing Heating, Ventilating, and Air Conditioning Systems	Procedural Standards for Testing Adjusting Balancing of Environmental Systems.
TAB Specialist	TAB Engineer	TAB Supervisor
Systems Readiness Check	Construction Phase Inspection	Field Readiness Check & Preliminary Field Procedures.

1.4 TAB STANDARD

TAB shall be performed in accordance with the requirements of the standard under which the TAB Firm's qualifications are approved, i.e., AABC MN-1or NEBB Procedural Stds, unless otherwise specified herein. All recommendations and suggested practices contained in the TAB Standard shall be considered mandatory. The provisions of the TAB Standard, including checklists, report forms, etc., shall, as nearly as practical, be used to satisfy the Contract requirements. The TAB Standard shall be used for all aspects of TAB, including qualifications for the TAB Firm and Specialist and calibration of TAB instruments. Where the instrument manufacturer calibration recommendations are more stringent than those listed in the TAB Standard, the manufacturer's recommendations shall be adhered to. All quality assurance provisions of the TAB Standard such as performance guarantees shall be part of this contract. For systems or system components not covered in the TAB Standard, TAB procedures shall be developed by the TAB Specialist. Where new procedures, requirements, etc., applicable to the Contract requirements have been published or adopted by the body responsible for the TAB Standard used (AABC or NEBB), the requirements and recommendations contained in these procedures and requirements shall be considered mandatory.

1.5 QUALIFICATIONS

1.5.1 TAB Firm

The TAB Firm shall be either a member of AABC or certified by the NEBB and certified in all categories and functions where measurements or performance are specified on the plans and specifications. The certification shall be maintained for the entire duration of duties specified herein. If, for any reason, the firm loses subject certification during this period, the Contractor shall immediately notify the Contracting Officer and submit another TAB Firm for approval. Any firm that has been the subject of disciplinary action by either the AABC or the NEBB within the five years preceding Contract Award shall not be eligible to perform any duties related to the HVAC systems, including TAB. All work specified in this Section and in other related Sections to be performed by the TAB Firm shall be considered invalid if the TAB Firm loses its certification prior to Contract completion and must be performed by an approved successor. These TAB services are to assist the prime Contractor in performing the quality oversight for which it is responsible. The TAB Firm shall be a subcontractor of the prime Contractor, and shall report to and be paid by the prime Contractor.

1.5.2 TAB Specialist

The TAB Specialist shall be either a member of AABC or an experienced technician of the Firm certified by the NEBB. The certification shall be maintained for the entire duration of duties specified herein. If, for any reason, the Specialist loses subject certification during this period, the Contractor shall immediately notify the Contracting Officer and submit another TAB Specialist for approval. Any individual that has been the subject of disciplinary action by either the AABC or the NEBB within the five years preceding Contract Award shall not be eligible to perform any duties related to the HVAC systems, including TAB. All work specified in this Section and in other related Sections performed by the TAB Specialist shall be considered invalid if the TAB Specialist loses its certification

prior to Contract completion and must be performed by the approved successor.

1.6 TAB SPECIALIST RESPONSIBILITIES

All TAB work specified herein and in related sections shall be performed under the direct guidance of the TAB Specialist. [The TAB Specialist shall participate in the commissioning process specified in Section 15995 COMMISSIONING OF HVAC SYSTEMS.]

PART 2 PRODUCTS (NOT APPLICABLE)

PART 3 EXECUTION

3.1 DESIGN REVIEW

The TAB Specialist shall review the Contract Plans and Specifications and advise the Contracting Officer of any deficiencies that would prevent the HVAC systems from effectively operating in accordance with the sequence of operation specified or prevent the effective and accurate TAB of the system. The TAB Specialist shall provide a Design Review Report individually listing each deficiency and the corresponding proposed corrective action necessary for proper system operation.

3.2 TAB RELATED HVAC SUBMITTALS

The TAB Specialist shall prepare a list of the submittals from the Contract Submittal Register that relate to the successful accomplishment of all HVAC TAB. The submittals identified on this list shall be accompanied by a letter of approval signed and dated by the TAB Specialist when submitted to the Government. The TAB Specialist shall also ensure that the location and details of ports, terminals, connections, etc., necessary to perform TAB are identified on the submittals.

3.3 TAB SCHEMATIC DRAWINGS AND REPORT FORMS

A schematic drawing showing each system component, including balancing devices, shall be provided for each system. Each drawing shall be accompanied by a copy of all report forms required by the TAB Standard used for that system. Where applicable, the acceptable range of operation or appropriate setting for each component shall be included on the forms or as an attachment to the forms. The schematic drawings shall identify all testing points and cross reference these points to the report forms and procedures.

3.4 DUCTWORK LEAK TESTING

The TAB Specialist shall witness the Ductwork Leak Testing specified in Section 15895 AIR SUPPLY, DISTRIBUTION, VENTILATION, AND EXHAUST SYSTEM and approve the results as specified in Paragraph TAB RELATED HVAC SUBMITTALS.

3.5 TESTING, ADJUSTING, AND BALANCING

3.5.1 TAB Procedures

Step by step procedures for each measurement required during TAB Execution shall be provided. The procedures shall be oriented such that there is a

separate section for each system. The procedures shall include measures to ensure that each system performs as specified in all operating modes, interactions with other components (such as exhaust fans, kitchen hoods, fume hoods, relief vents, etc.) and systems, and with all seasonal operating differences, diversity, simulated loads, and pressure relationships required.

3.5.2 Systems Readiness Check

The TAB Specialist shall inspect each system to ensure that it is complete, including installation and operation of controls, and that all aspects of the facility that have any bearing on the HVAC systems, including installation of ceilings, walls, windows, doors, and partitions, are complete to the extent that TAB results will not be affected by any detail or touch-up work remaining. The TAB Specialist shall also verify that all items such as ductwork and piping ports, terminals, connections, etc., necessary to perform TAB shall be complete during the Systems Readiness Check.

3.5.3 Preparation of TAB Report

Preparation of the TAB Report shall begin only when the Systems Readiness Report has been approved. The Report shall be oriented so that there is a separate section for each system. The Report shall include a copy of the appropriate approved Schematic Drawings and TAB Related Submittals, such as pump curves, fan curves, etc., along with the completed report forms for each system. The operating points measured during successful TAB Execution and the theoretical operating points listed in the approved submittals shall be marked on the performance curves and tables. Where possible, adjustments shall be made using an "industry standard" technique which would result in the greatest energy savings, such as adjusting the speed of a fan instead of throttling the flow. Any deficiencies outside of the realm of normal adjustments and balancing during TAB Execution shall be noted along with a description of corrective action performed to bring the measurement into the specified range. If, for any reason, the TAB Specialist determines during TAB Execution that any Contract requirement cannot be met, the TAB Specialist shall immediately provide a written description of the deficiency and the corresponding proposed corrective action necessary for proper system operation to the Contracting Officer.

3.5.4 TAB Verification

The TAB Specialist shall recheck ten percent of the measurements listed in the Tab Report and prepare a TAB Verification Report. The measurements selected for verification and the individuals that witness the verification will be selected by the Contracting Officer's Representative (COR). The measurements will be recorded in the same manner as required for the TAB Report. All measurements that fall outside the acceptable operating range specified shall be accompanied by an explanation as to why the measurement does not correlate with that listed in the TAB Report and a description of corrective action performed to bring the measurement into the specified range. The TAB Specialist shall update the original TAB report to reflect any changes or differences noted in the TAB verification report and submit the updated TAB report. If over 20 percent of the measurements selected by the COR for verification fall outside of the acceptable operating range specified, the COR will select an additional ten percent for verification.

If over 20 percent of the total tested (including both test groups) fall outside of the acceptable range, the TAB Report shall be considered invalid and all contract TAB work shall be repeated beginning with the Systems Readiness Check.

3.5.5 Marking of Setting

Following approval of TAB Verification Report, the setting of all HVAC adjustment devices including valves, splitters, and dampers shall be permanently marked by the TAB Specialist so that adjustment can be restored if disturbed at any time.

3.5.6 Identification of Test Ports

The TAB Specialist shall permanently and legibly identify the location points of duct test ports. If the ductwork has exterior insulation, the identification shall be made on the exterior side of the insulation. All penetrations through ductwork and ductwork insulation shall be sealed to prevent air leakage or to maintain integrity of vapor barrier.

This page intentionally blank

SECTION 15995

COMMISSIONING OF HVAC SYSTEMS

PART 1 GENERAL

1.1 SUBMITTALS

Government approval is required for submittals with a "GA" designation; submittals with "FIO" designation are for information only. The following shall be submitted in accordance with Section 01300 SUBMITTAL PROCEDURES:

SD-01 Data

Commissioning Team; GA.

List of team members who will represent the Contractor in the pre-commissioning checks and functional performance testing, at least 2 weeks prior to the start of pre-commissioning checks. Proposed revision to the list, prior to the start of the impacted work.

SD-06 Instructions

Test Procedures; GA.

Detailed procedures for pre-commissioning checks and functional performance tests, at least 4 weeks prior to the start of pre-commissioning checks.

SD-07 Schedules

Test Schedule; GA.

Schedule for pre-commissioning checks and functional performance tests, at least 2 weeks prior to the start of pre-commissioning checks.

SD-09 Reports

Test Reports; GA.

Completed pre-commissioning checklists and functional performance test checklists organized by system and by subsystem and submitted as one package. The results of failed tests shall be included along with a description of the corrective action taken.

1.2 SEQUENCING AND SCHEDULING

The work described in this Section shall begin only after all work required in related Sections, including Section 15950 HVAC CONTROL SYSTEMS and Section 15990 TESTING, ADJUSTING, AND

BALANCING OF HVAC SYSTEMS, has been successfully completed, and all test and inspection reports and operation and maintenance manuals required in these Sections have been submitted and approved.

PART 2 PRODUCTS (Not Applicable)

PART 3 EXECUTION

3.1 COMMISSIONING TEAM AND CHECKLISTS

The Contractor shall designate team members to participate in the pre-commissioning checks and the functional performance testing specified herein. In addition, the Government will be represented by a representative of the Contracting Officer, the Design Agent's Representative, and the Using Agency. The team members shall be as follows:

Designation	Function
Q	Contractor's Chief Quality Control Representative
M	Contractor's Mechanical Representative
E	Contractor's Electrical Representative
T	Contractor's Testing, Adjusting, and Balancing Representative
C	Contractor's Controls Representative
D	Design Agent's Representative
O	Contracting Officer's Representative
U	Using Agency's Representative

Each checklist shown in appendices A and B shall be completed by the commissioning team. Acceptance by each commissioning team member of each pre-commissioning checklist item shall be indicated by initials and date unless an "X" is shown indicating that participation by that individual is not required. Acceptance by each commissioning team member of each functional performance test checklist shall be indicated by signature and date.

3.2 TESTS

The pre-commissioning checks and functional performance tests shall be performed in a manner which essentially duplicates the checking, testing, and inspection methods established in the related Sections. Where checking, testing, and inspection methods are not specified in other Sections, methods shall be established which will provide the information required. Testing and verification required by this section shall be performed during the Commissioning phase. Requirements in related Sections are independent from the requirements of this Section and shall not be used to satisfy any of the requirements specified in this Section. The Contractor shall provide all materials, services, and labor required to perform the pre-commissioning checks and functional performance tests. A pre-commissioning check or functional performance test shall be aborted if any system deficiency prevents the successful completion of the test or if any participating non-Government commissioning team member of which participation is specified is not present for the test. The Contractor shall reimburse the Government for all costs associated with

effort lost due to tests that are aborted. These costs shall include salary, travel costs and per diem (where applicable) for Government commissioning team members.

3.2.1 Pre-Commissioning Checks

Pre-commissioning checks shall be performed for the items indicated on the checklists in Appendix A. Deficiencies discovered during these checks shall be corrected and retested in accordance with the applicable contract requirements.

3.2.2 Functional Performance Tests

Functional performance tests shall be performed for the items indicated on the checklists in Appendix B. Functional performance tests shall begin only after all pre-commissioning checks have been successfully completed. Tests shall prove all modes of the sequences of operation, and shall verify all other relevant contract requirements. Tests shall begin with equipment or components and shall progress through subsystems to complete systems. Upon failure of any functional performance test checklist item, the Contractor shall correct all deficiencies in accordance with the applicable contract requirements. The checklist shall then be repeated until it has been completed with no errors.

APPENDIX A

PRE-COMMISSIONING CHECKLISTS

Pre-commissioning checklist - Piping

For Piping System

Checklist Item	Q	M	E	T	C	D	O	U
Installation								
a. Piping complete.	___	___	X	___	X	___	___	___
b. As-built shop drawings submitted.	___	___	X	___	X	___	___	___
c. Piping flushed and cleaned.	___	___	X	___	X	___	___	___
d. Strainers cleaned.	___	___	X	___	X	___	___	___
e. Valves installed as required.	___	___	X	___	X	___	___	___
f. Piping insulated as required.	___	___	X	___	X	___	___	___
g. Thermometers and gauges installed as required.	___	___	X	___	X	___	___	___
h. Verify operation of valves.	___	___	X	___	___	___	___	___
i. Air vents installed as specified.	___	___	X	X	X	___	___	___
j. Flexible connectors installed as specified.	___	___	X	X	X	___	___	___
k. Verify that piping has been labeled and valves identified as specified.	___	___	X	___	___	___	___	___
Testing, Adjusting, and Balancing (TAB)								
a. Hydrostatic test complete.	___	___	X	___	X	___	___	___
b. TAB operation complete.	___	___	X	___	___	___	___	___

Pre-commissioning Checklist - Ductwork

For Air Handler:

Checklist Item	Q	M	E	T	C	D	O	U
Installation								
a. Ductwork complete.	___	___	X	___	X	___	___	___
b. As-built shop drawings submitted.	___	___	X	___	X	___	___	___
c. Ductwork leak test complete.	___	___	X	___	X	___	___	___
d. Fire dampers, smoke dampers, and access doors installed as required with installation of each verified by the specified team members initialing each location on a copy of the as-built drawings.	___	___	X	___	X	___	___	__
e. Ductwork insulated as required.	___	___	X	___	X	___	___	___
f. Thermometers and gauges installed as required.	___	___	___	___	___	___	___	___
g. Verify open/closed status of dampers.	___	___	X	___	X	___	___	___
h. Verify smoke dampers operation.	___	___	X	___	___	___	___	___
i. Flexible connectors installed as specified.	___	___	X	___	X	___	___	___
Testing, Adjusting, and Balancing (TAB)								
a. TAB operation complete.	___	___	X	___	X	___	___	___

Pre-commissioning Checklist - Pumps

For Pump:

Checklist Item	Q	M	E	T	C	D	O	U

Installation

a. Pumps grouted in place. ___ ___ X X X ___ ___ ___

b. Pump vibration isolation devices functional. ___ ___ X X X ___ ___ ___

c. Pump/motor coupling alignment verified. ___ ___ X X X ___ ___ ___

d. Piping system installed. ___ ___ X X X ___ ___ ___

e. Piping system pressure tested. ___ ___ X X X ___ ___ ___

f. Pump not leaking. ___ ___ X X X ___ ___ ___

g. Field assembled couplings aligned to meet manufacturer's prescribed tolerances. ___ ___ X X X ___ ___ ___

Electrical

a. Power available to pump disconnect. ___ ___ ___ X X ___ ___ ___

b. Pump rotation verified. ___ ___ ___ X X ___ ___ ___

c. Control system interlocks functional. ___ ___ ___ X ___ ___ ___ ___

d. Verify that power disconnect is located within sight of the unit it controls. ___ ___ ___ X ___ ___ ___ ___

Testing, Adjusting, and Balancing (TAB)

a. Pressure/temperature gauges installed. ___ ___ X ___ X ___ ___ ___

b. Piping system cleaned. ___ ___ X X X ___ ___ ___

c. Chemical water treatment complete. ___ ___ X X X ___ ___ ___

d. Water balance complete. ___ ___ X ___ X ___ ___ ___

e. Water balance with design maximum flow. ___ ___ X ___ X ___ ___ ___

f. TAB Report submitted. ___ ___ X ___ X ___ ___ ___

Pre-commissioning Checklist - Packaged Air Cooled Chiller

For Chiller:

Checklist Item	Q	M	E	T	C	D	O	U
Installation								
a. Chiller properly piped.	___	___	X	___	___	___	___	___
b. Chilled water pipe leak tested.	___	___	X	X	X	___	___	___
c. Verify that refrigerant used complies with specified requirements.	___	___	X	X	X	___	___	___
d. Any damage to coil fins has been repaired.	___	___	X	___	X	___	___	___
e. Manufacturer's required maintenance clearance provided.	___	___	X	X	X	___	___	___
Electrical								
a. Power available to unit disconnect.	___	___	___	X	___	___	___	___
b. Power available to unit control panel.	___	___	___	X	___	___	___	___
c. Separate power is supplied to electric heating tape.	___	___	___	X	___	___	___	___
d. Verify that power disconnect is located within sight of the unit it controls.	___	___	___	X	___	___	___	___
Controls								
a. Factory startup and checkout complete.	___	___	X	X	___	___	___	___
b. Chiller safety/protection devices tested.	___	___	X	X	___	___	___	___
c. Chilled water flow switch installed.	___	___	X	X	___	___	___	___
d. Chilled water flow switch tested.	___	___	X	X	___	___	___	___
e. Chilled water pump interlock installed.	___	___	X	X	X	___	___	___
f. Chilled water pump interlock tested.	___	___	___	X	___	___	___	___

For Converter:

Checklist Item	Q	M	E	T	C	D	O	U
Installation								
a. Omitted								
b. Omitted								
c. Hot water piping installed.	___	___	X	___	___	___	___	___
d. Hot water piping tested.	___	___	X	X	X	___	___	___
e. Makeup water piping installed.	___	___	X	X	X	___	___	___
f. Vacuum breaker installed on shell of shell and tube unit.	___	___	X	X	X	___	___	___
g. Air vent installed as specified.	___	___	X	X	X	___	___	___
h. Manufacturer's required maintenance clearance provided.	___	___	X	X	X	___	___	___
Startup								
a. Hot water system cleaned and filled.	___	___	X	X	X	___	___	___
b. Omitted								
c. Omitted								
d. Converter safety/protection devices tested.	___	___	X	X	X	___	___	___
e. Converter startup and checkout complete.	___	___	X	X	X	___	___	___
Controls								
a. Control valves/actuators properly installed.	___	___	X	___	___	___	___	___
b. Control valves/actuators operable.	___	___	X	___	___	___	___	___

Pre-commissioning Checklist - Fan Coil Unit

For Fan Coil Unit:

Checklist Item	Q	M	E	T	C	D	O	U
Installation								
a. Vibration isolation devices installed.	___	___	X	X	X	___	___	___
b. Access doors/removable panels are operable and sealed.	___	___	X	___	X	___	___	___
c. Casing undamaged.	___	___	X	X	X	___	___	___
d. Insulation undamaged.	___	___	X	X	X	___	___	___
e. Condensate drainage is unobstructed.	___	___	X	X	X	___	___	___
f. Fan belt adjusted.	___	___	X	___	X	___	___	___
g. Any damage to coil fins has been repaired.	___	___	X	___	X	___	___	___
h. Manufacturer's required maintenance clearance provided.	___	___	X	X	X	___	___	___
Electrical								
a. Power available to unit disconnect.	___	___	___	X	___	___	___	___
b. Power available to unit control panel.	___	___	___	X	___	___	___	___
c. Proper motor rotation verified.	___	___	___	___	X	___	___	___
d. Verify that power disconnect is located within sight of the unit it controls.	___	___	___	X	___	___	___	___
Coils								
a. Chilled water piping properly connected.	___	___	X	X	X	___	___	__
b. Chilled water piping pressure tested.	___	___	X	X	X	___	___	__
c. Hot water piping properly connected.	___	___	X	___	___	___	___	__
d. Hot water piping pressure tested.	___	___	X	___	___	___	___	__

Controls

a. Control valves/actuators properly installed. ___ ___ X ___ ___ ___ ___ ___

b. Control valves/actuators operable. ___ ___ X X ___ ___ ___ ___

c. Verify proper location and installation of thermostat. ___ ___ X ___ ___ ___ ___ ___

Testing, Adjusting, and Balancing (TAB)

a. Construction filters removed and replaced. ___ ___ X ___ ___ ___ ___ ___

b. TAB results +10%/-0% of cfm shown on drawings. ___ ___ X ___ X ___ ___ ___

c. TAB Report submitted. ___ ___ X ___ X ___ ___ ___

Pre-commissioning Checklist - Unit Heater

For Unit Heater:

Checklist Item Q M E T C D O U

Installation

a. Hot water piping properly connected. ___ ___ X ___ ___ ___ ___ __

b. Hot water piping pressure tested. ___ ___ X ___ ___ ___ ___ __

c. Air vent installed on hot water coil with shutoff valve as specified. ___ ___ X X X ___ ___ ___

d. Any damage to coil fins has been repaired. ___ ___ X ___ X ___ ___ ___

e. Manufacturer's required maintenance/ operational clearance provided. ___ ___ X X X ___ ___ ___

Electrical

a. Power available to unit disconnect. ___ ___ ___ X ___ ___ ___ ___

b. Proper motor rotation verified. ___ ___ ___ X X ___ ___ ___

c. Verify that power disconnect is located within sight of the unit it controls. ___ ___ ___ X ___ ___ ___ ___

d. Power available to electric heating coil. ___ ___ ___ X ___ ___ ___ ___

Controls

a. Control valves properly installed. ___ ___ X ___ ___ ___ ___ ___

b. Control valves operable. ___ ___ X X ___ ___ ___ ___

c. Verify proper location and installation of thermostat. ___ ___ X ___ ___ ___ ___ ___

Testing, Adjusting, and Balancing (TAB)

a. TAB Report submitted. ___ ___ X ___ X ___ ___ ___

Pre-commissioning Checklist - Exhaust Fan

For Exhaust Fan:

Checklist Item Q M E T C D O U

Installation

a. Fan belt adjusted. ___ ___ X ___ X ___ ___ ___

Electrical

a. Power available to fan disconnect. ___ ___ ___ X ___ ___ ___ ___

b. Proper motor rotation verified. ___ ___ ___ ___ X ___ ___ ___

c. Verify that power disconnect is located within sight of the unit it controls. ___ ___ ___ X ___ ___ ___ ___

Controls

a. Control interlocks properly installed. ___ ___ ___ X ___ ___ ___ ___

b. Control interlocks operable. ___ ___ ___ X ___ ___ ___ ___

c. Dampers/actuators properly installed. ___ ___ X ___ ___ ___ ___ ___

d. Dampers/actuators operable. ___ ___ X ___ ___ ___ ___ ___

e. Verify proper location and installation of thermostat. ___ ___ X ___ ___ ___ ___ ___

Testing, Adjusting, and Balancing (TAB)

a. TAB results +10%/-0% to cfm shown on drawings. ___ ___ X ___ ___ ___ ___ ___

b. TAB Report submitted. ___ ___ X ___ X ___ ___ ___

Pre-commissioning Checklist - HVAC System Controls

For HVAC System:

Checklist Item Q M E T C D O U

Installation

a. As-built shop drawings submitted. ___ ___ X X ___ ___ ___ ___

b. Layout of control panel matches drawings. ___ ___ X X ___ ___ ___ ___

c. Framed instructions mounted in or near control panel. ___ ___ X X ___ ___ ___ ___

d. Components properly labeled (on inside and outside of panel). ___ ___ X X ___ ___ ___ ___

e. Control components piped and/or wired to each labeled terminal strip. ___ ___ X X ___ ___ ___ ___

f. EMCS connection made to each labeled terminal strip as shown. ___ ___ X X ___ ___ ___ ___

g. Control wiring and tubing labeled at all terminations, splices, and junctions. ___ ___ X X ___ ___ ___ ___

h. Shielded wiring used on electronic sensors.___ ___ X X ___ ___ ___ ___

i. Air dryer installed as specified. ___ ___ X X ___ ___ ___ ___

j. Water drain installed as specified. ___ ___ X X ___ ___ ___ ___

Main Power and Control Air

a. 110 volt AC power available to panel. ___ ___ ___ X ___ ___ ___ ___

Testing, Commissioning, and Balancing

a. Testing, Commissioning, and Balancing Report submitted. ___ ___ X ___ ___ ___ ___ ___

Pre-commissioning Checklist - Single Zone Air Handling Unit

For Air Handling Unit:

Checklist Item Q M E T C D O U

Installation

a. Vibration isolation devices installed. ___ ___ X X X ___ ___ ___

b. Inspection and access doors are operable and sealed. ___ ___ X ___ X ___ ___ ___

c. Casing undamaged. ___ ___ X X X ___ ___ ___

d. Insulation undamaged. ___ ___ X X X ___ ___ ___

e. Condensate drainage is unobstructed. ___ ___ X X X ___ ___ ___

f. Fan belt adjusted. ___ ___ X ___ X ___ ___ ___

g. Any damage to coil fins has been repaired. ___ ___ X ___ X ___ ___ ___

h. Manufacturer's required maintenance clearance provided. ___ ___ X X X ___ ___ ___

Electrical

a. Power available to unit disconnect. ___ ___ ___ X X ___ ___ ___

b. Power available to unit control panel. ___ ___ ___ X ___ ___ ___ ___

c. Proper motor rotation verified. ___ ___ ___ ___ X ___ ___ ___

d. Verify that power disconnect is located

within sight of the unit it controls. ___ ___ ___ X ___ ___ ___ ___

e. Power available to electric heating coil. ___ ___ ___ X ___ ___ ___ ___

Coils

a. Chilled water piping properly connected. ___ ___ X ___ ___ ___ ___ __

b. Chilled water piping pressure tested. ___ ___ X X X ___ ___ __

c. Hot water piping properly connected. ___ ___ X ___ ___ ___ ___ __

d. Hot water piping pressure tested. ___ ___ X X ___ ___ ___ __

e. Air vents installed on water as specified. ___ ___ X X X ___ ___ __

f. Any damage to coil fins has been repaired. ___ ___ X ___ X ___ ___ ___

Controls

a. Control valves/actuators properly installed. ___ ___ X ___ ___ ___ ___ ___

b. Control valves/actuators operable. ___ ___ X ___ ___ ___ ___ ___

c. Dampers/actuators properly installed. ___ ___ X ___ ___ ___ ___ ___

d. Dampers/actuators operable. ___ ___ X ___ ___ ___ ___ ___

e. Verify proper location and installation of thermostat. ___ ___ X ___ ___ ___ ___ ___

Testing, Adjusting, and Balancing (TAB)

a. Construction filters removed and replaced. ___ ___ X ___ X ___ ___ ___

b. TAB results +10%/-0% cfm shown on drawings.___ ___ ___ ___ X ___ ___ ___

c. TAB Report submitted. ___ ___ X ___ X ___ ___ ___

APPENDIX B

FUNCTIONAL PERFORMANCE TESTS CHECKLISTS

Functional Performance Test Checklist - Pumps

For Pump:

Prior to performing this checklist, ensure that for closed loop systems, system is pressurized and the make-up water system is operational or, for open loop systems, that the sumps are filled to the proper level.

1. Activate pump start using control system commands (all possible combination, on/auto, etc.). ON_____ AUTO_____ OFF_____

   a. Verify pressure drop across strainer:

Strainer inlet pressure _____psig
Strainer outlet pressure _____psig

b. Verify pump inlet/outlet pressure reading, compare to Testing, Adjusting, and Balancing (TAB) Report, pump design conditions, and pump manufacturer's performance.

	DESIGN	TAB	ACTUAL
Pump inlet pressure (psig)	_____	_____	_____
Pump outlet pressure (psig)	_____	_____	_____

c. Operate pump at shutoff and at 100 percent of designed flow when all components are in full flow. Plot test readings on pump curve and compare results against readings taken from flow measuring devices.

	SHUTOFF	100 percent
Pump inlet pressure (psig)	_____	_____
Pump outlet pressure	_____	_____
Pump flow rate (gpm)	_____	_____

d. Operate pump at shutoff and at minimum flow or when all components are in full by-pass. Plot test readings on pump curve and compare results against readings taken from flow measuring devices.

	SHUTOFF	100 percent
Pump inlet pressure (psig)	_____	_____
Pump outlet pressure	_____	_____

Pump flow rate (gpm) _____ _____

2. Verify motor amperage each phase and voltage phase to phase and phase to ground for both the full flow and the minimum flow conditions.

a. Full flow:

	PHASE 1	PHASE 2	PHASE 3
Amperage	_____	_____	_____
Voltage	_____	_____	
Voltage	_____		
Voltage to ground	_____	_____	_____

b. Minimum flow:

	PHASE 1	PHASE 2	PHASE 3
Amperage	_____	_____	_____
Voltage	_____	_____	
Voltage	_____		
Voltage to ground	_____	_____	_____

3. Unusual vibration, noise, etc.

_____

_____

4. Certification: We the undersigned have witnessed the above functional performance tests and certify that the item tested has met the performance requirements in this section of the specifications.

Signature and Date

Contractor's Chief Quality Control Representative _____

Contractor's Mechanical Representative _____

Contractor's Electrical Representative _____

Contractor's Testing, Adjusting and Balancing Representative _____

Contractor's Controls Representative _____

Contracting Officer's Representative _____

Using Agency's Representative _____

Functional Performance Test Checklist - Single Zone Air Handling Unit

For Air Handling Unit:

1. Functional Performance Test: Contractor shall verify operation of air handling unit as per specification including the following:

a. The following shall be verified when the supply and return fans operating] mode is initiated:

(1) All dampers in normal position. _____

(2) All valves in normal position. _____

(3) System safeties allow start if safety conditions are met. _____

b. Occupied mode of operation - economizer de-energized.

(1) Outside air damper at minimum position. _____

(2) Return air damper open. _____

(3) Relief air damper at minimum position. _____

(4) Chilled water control valve modulating to maintain space cooling temperature set point. _____

(5) Hot water control valve modulating to maintain space heating temperature set point input from outside air temperature controller. _____

c. Occupied mode of operation - economizer energized.

(1) Outside air damper modulated to maintain mixed air temperature set point. _____

(2) Relief air damper modulates with outside air damper according to sequence of operation. _____

(3) Chilled water control valve modulating to maintain space cooling temperature set point. _____

d. Unoccupied mode of operation

(1) All dampers in normal position. _____

(2) Verify low limit space temperature is maintained as specified in sequence of operation. _____

e. The following shall be verified when the [supply fan off] [supply and return fans off] mode is initiated:

(1) All dampers in normal position. _____

(2) All valves in normal position. _____

(3) Fan de-energizes. _____

f. Verify cooling coil and heating coil operation by varying thermostat set point from cooling set point to heating set point and returning to cooling set point. _____

g. Verify safety shut down initiated by smoke detectors. _____

h. Verify safety shut down initiated by low temperature protection thermostat. _____

2. Certification: We the undersigned have witnessed the above functional performance tests and certify that the item tested has met the performance requirements in this section of the specifications.

Signature and Date

Contractor's Chief Quality Control Representative _____

Contractor's Mechanical Representative _____

Contractor's Electrical Representative _____

Contractor's Testing, Adjusting and Balancing Representative _____

Contractor's Controls Representative _____

Contracting Officer's Representative _____

Using Agency's Representative _____

Functional Performance Test Checklist - Packaged Air Cooled Chiller

For Chiller:

1. Functional Performance Test: Contractor shall demonstrate operation of chilled water system as per specifications including the following: Start building air handler to provide load for chiller. Activate controls system chiller start sequence as follows.

a. Start chilled water pump and establish chilled water flow. Verify chiller-chilled water proof-of-flow switch operation. _____

b. Verify control system energizes chiller start sequence. _____

c. Verify chiller senses chilled water temperature above set point and control system activates chiller start. _____

d. Verify functioning of "soft start" sequence. _____

e. Shut off air handling equipment to remove load on chilled water system. Verify chiller shutdown sequence is initiated and accomplished after load is removed. _____

f. Restart air handling equipment one minute after chiller shut down. Verify chiller restart sequence. _____

2. Verify chiller inlet/outlet pressure reading, compare to Testing, Adjusting, and Balancing (TAB) Report, chiller design conditions, and chiller manufacturer's performance data.

	DESIGN	TAB	ACTUAL
Chiller inlet pressure (psig)	_____	_____	_____
Chiller outlet pressure (psig)	_____	_____	_____

3. Verify chiller amperage each phase and voltage phase-to-phase and phase-to-ground.

	PHASE 1	PHASE 2	PHASE 3
Amperage	_____	_____	_____
Voltage	_____	_____	
Voltage	_____		
Voltage to ground	_____	_____	_____

4. Record the following information:

Ambient dry bulb temperature _____ degrees F
Ambient wet bulb temperature _____ degrees F
Entering chilled water temperature _____ degrees F
Leaving chilled water temperature _____ degrees F

5. Unusual vibration, noise, etc.

_____

_____

6. Certification: We the undersigned have witnessed the above functional performance tests and certify that the item tested has met the performance requirements in this section of the specifications.

Signature and Date

Contractor's Chief Quality Control Representative _____

Contractor's Mechanical Representative _____

Contractor's Electrical Representative _____

Contractor's Testing, Adjusting and Balancing Representative _____

Contractor's Controls Representative _____

Contracting Officer's Representative _____

Using Agency's Representative _____

Functional Performance Test Checklist - Fan Coil Units

The Contracting Officer will select fan coil units to be spot-checked during the functional performance test. The number of terminals shall not exceed 10 percent.

1. Functional Performance Test: Contractor shall demonstrate operation of selected fan coils as per specifications including the following:

a. Cooling only fan coils:

(1) Verify fan coil unit response to room temperature set point adjustment. Changes to be cooling set point to cooling set point minus 10 degrees and return to cooling set point. _____

(2) Check blower fan air flow. _____ cfm

(3) Check cooling coil water flow. _____ gpm

(4) Verify proper operation of cooling water control valve. _____

b. Cooling/heating fan coils:

(1) Verify fan coil unit response to room temperature set point adjustment. Changes to be cooling set point to heating set point and return to cooling set point. _____

(2) Check blower fan air flow. _____ cfm

(3) Check cooling coil water flow. _____ cfm

(4) Verify proper operation of cooling water control valve. _____

(5) Check cooling mode inlet air temperature. _____ degrees F

(6) Check cooling mode outlet air temperature. _____ degrees F

(7) Check heating coil water flow. _____ gpm

(8) Verify proper operation of heating water control valve. _____

(9) Check heating mode inlet air temperature. _____ degrees F

(10) Check heating mode outlet air temperature. _____ degrees F

2. Certification: We the undersigned have witnessed the above functional performance tests and certify that the item tested has met the performance requirements in this section of the specifications.

Signature and Date

Contractor's Chief Quality Control Representative _____

Contractor's Mechanical Representative _____

Contractor's Electrical Representative _____

Contractor's Testing, Adjusting and Balancing Representative _____

Contractor's Controls Representative _____

Contracting Officer's Representative _____

Using Agency's Representative _____

Functional Performance Test Checklist - Unit Heaters

The Contracting Officer will select unit heaters to be spot-checked during the functional performance test. The number of terminals shall not exceed [2] [10] [10 percent].

1. Functional Performance Test: Contractor shall demonstrate operation of selected unit heaters as per specifications including the following:

a. Verify unit heater response to room temperature set point adjustment. Changes to be heating set point to heating set point minus 10 degrees and return to heating set point. _____

b. Check blower fan speed. _____rpm

c. Check heating mode inlet air temperature. _____ degrees F

d. Check heating mode outlet air temperature. _____ degrees F

2. Certification: We the undersigned have witnessed the above functional performance tests and certify that the item tested has met the performance requirements in this section of the specifications.

Signature and Date

Contractor's Chief Quality Control Representative _____

Contractor's Mechanical Representative _____

Contractor's Electrical Representative _____

Contractor's Testing, Adjusting and Balancing Representative _____

Contractor's Controls Representative _____

Contracting Officer's Representative _____

Using Agency's Representative _____

Functional Performance Test Checklist - Steam/Hot Water Converter

For Converter: [_____]

1. Functional Performance Test: Contractor shall demonstrate operation of heating system as per specifications including the following: Start building heating equipment to provide load for converter.

a. Verify control system energizes. _____

b. Verify converter senses hot water temperature below set point and control system modulates steam valve. _____

c. Shut off building heating equipment to remove load on heating system. Verify converter steam valve closes after load is removed. _____

2. Verify converter inlet/outlet pressure reading, compare to converter design conditions and manufacturer's performance data.

	DESIGN	ACTUAL
Converter inlet water temp (degrees F)	_____	_____
Converter outlet water temp(degrees F)	_____	_____
Converter inlet steam pressure (psig)	_____	_____
Determine water flow rate based on pressure drop through converter	_____	_____
Determine water flow rate with flow measuring device	_____	_____
Verify that temperature of water is in accordance with outdoor air reset schedule	_____	_____

3. Verify proper operation of converter safeties. _____

4. Check and report unusual vibration, noise, etc.

_____

_____

5. Certification: We the undersigned have witnessed the above functional performance tests and certify that the item tested has met the performance requirements in this section of the specifications.

Signature and Date

Contractor's Chief Quality Control Representative _____

Contractor's Mechanical Representative _____

Contractor's Electrical Representative _____

Contractor's Testing, Adjusting and Balancing Representative _____

Contractor's Controls Representative _____

Contracting Officer's Representative _____

Using Agency's Representative _____

Functional Performance Test Checklist - HVAC Controls

For HVAC System:

The Contracting Officer will select HVAC control systems to undergo functional performance testing. The number of systems shall not exceed 10 percent.

1. Functional Performance Test: Contractor shall verify operation of HVAC controls by performing the following tests:

a. Verify that controller is maintaining the set point by manually measuring the controlled variable with a thermometer, sling psychrometer, inclined manometer, etc.

b. Verify sensor/controller combination by manually measuring the controlled medium. Take readings from control panel display and compare readings taken manually. Record all readings.

Sensor _____
Manual measurement _____
Panel reading value _____

c. Verify system stability by changing the controller set point as follows:

(1) Air temperature - 10 degrees F

(2) Water temperature - 10 degrees F

(3) Static pressure - 10 percent of set point

(4) Relative humidity - percent (RH)

The control system shall be observed for 10 minutes after the change in set point. Instability or excessive hunting will be unacceptable.

d. Verify interlock with other HVAC controls.

e. Verify interlock with fire alarm control panel.

f. Verify interlock with EMCS.

[g. Change controller set point 10 percent with EMCS and verify correct response.]

2. Verify that operation of control system conforms to that specified in the sequence of operation.

3. Certification: We the undersigned have witnessed the above functional performance tests and certify that the item tested has met the performance requirements in this section of the specifications.

Signature and Date

Contractor's Chief Quality Control Representative _____

Contractor's Mechanical Representative _____

Contractor's Electrical Representative _____

Contractor's Testing, Adjusting and Balancing Representative _____

Contractor's Controls Representative _____

Contractor's Officer's Representative _____

Using Agency's Representative _____

END OF SECTION

SECTION 16070

SEISMIC PROTECTION FOR ELECTRICAL EQUIPMENT

PART 1 GENERAL

1.1 REFERENCES

The publications listed below form a part of this specification to the extent referenced. The publications are referred to in the text by basic designation only.

AMERICAN STANDARDS FOR TESTING AND MATERIALS (ASTM)

ASTM E 580	(1996) Application of Ceiling Suspension Systems for Acoustical Tile and Lay-in Panels in Areas Requiring Moderate Seismic Restraint

COE TECHNICAL INSTRUCTIONS (TI)

TI 809-04	(1998) Seismic Design for Buildings

UNDERWRITERS LABORATORIES (UL)

UL 1570	(1995; Rev thru Jun 1997) Fluorescent Lighting Fixtures
UL 1571	(1995; Rev thru Jun 1997) Incandescent Lighting Fixtures

1.2 SYSTEM DESCRIPTION

1.2.1 General Requirements

The requirements for seismic protection measures described in this section shall be applied to the electrical equipment and systems listed below. Structural requirements shall be in accordance with Section 13080 SEISMIC PROTECTION FOR MISCELLANEOUS EQUIPMENT.

1.2.2 Electrical Equipment

Electrical equipment shall include the following items to the extent required on the drawings or in other sections of these specifications:

Control Panels	Air Handling Units
Pumps with Motors	Switchgear
Light Fixtures	Unit Substations
Motor Control Centers	Transformers
Switchboards (Floor Mounted)	Storage Racks

1.2.3 Electrical Systems

The electrical systems shall be installed as required on the drawings and other sections of these specifications and shall be seismically protected in accordance with this specification.

1.2.4 Omitted

1.2.5 Conduits Requiring No Special Seismic Restraints

Seismic restraints may be omitted from electrical conduit less than 64 mm 2-1/2 inches trade size. All other interior conduit shall be seismically protected as specified.

1.3 SUBMITTALS

Government approval is required for submittals with a "GA" designation; submittals having an "FIO" designation are for information only. The following shall be submitted in accordance with Section 01330 SUBMITTAL PROCEDURES:

SD-01 Data

Lighting Fixtures in Buildings; GA. Equipment Requirements; GA.

Copies of the design calculations with the detail drawings. Calculations shall be stamped by a registered engineer and shall verify the capability of structural members to which bracing is attached for carrying the load from the brace.

Contractor Designed Bracing; GA.

Copies of the Design Calculations with the Drawings. Calculations shall be approved, certified, stamped and signed by a Registered Professional Engineer. Calculations shall verify the capability of structural members to which bracing is attached for carrying the load from the brace.

SD-04 Drawings

Lighting Fixtures in Buildings; [_____]. Equipment Requirements; [_____].

Detail drawings along with catalog cuts, templates, and erection and installation details, as appropriate, for the items listed. Submittals shall be complete in detail; shall indicate thickness, type, grade, class of metal, and dimensions; and shall show construction details, reinforcement, anchorage, and installation with relation to the building construction.

1.4 EQUIPMENT REQUIREMENTS

1.4.1 Rigidly Mounted Equipment

The following specific items of equipment to be furnished under this contract shall be constructed and assembled to withstand the seismic forces specified in TI 809-04, Chapter 10. For any rigid equipment which is rigidly attached on both sides of a building expansion joint, flexible joints for piping, electrical conduit, etc., that are capable of accommodating displacements equal to the full width of the joint in both orthogonal directions, shall be provided.

Transformers
Switch Boards and Switch Gears
Motor Control Centers
Free Standing Electric Motors
Communications Racks

1.4.2 Nonrigid or Flexibly-Mounted Equipment

Specific items of equipment to be furnished under this contract shall be constructed and assembled to resist a horizontal lateral force of 0.15 times the operating weight of the equipment at the vertical center of gravity of the equipment.

PART 2 PRODUCTS

2.1 LIGHTING FIXTURE SUPPORTS

Lighting fixtures and supports shall conform to UL 1570 or UL 1571 as applicable.

2.2 SWAY BRACING MATERIALS

Sway bracing materials (e.g. rods, plates, rope, angles, etc.) shall be as specified in Section 13080 SEISMIC PROTECTION FOR MISCELLANEOUS EQUIPMENT.

PART 3 EXECUTION

3.1 SWAY BRACES FOR CONDUIT

Conduit shall be braced as for an equivalent weight pipe in accordance with Section 15070 SEISMIC PROTECTION FOR MECHANICAL EQUIPMENT.

3.2 LIGHTING FIXTURES IN BUILDINGS

Lighting fixtures and supports shall conform to the following:

3.2.1 Pendant Fixtures

Pendant fixtures shall conform to the requirements of TI 809-04, Chapter 10.

3.2.2 Ceiling Attached Fixtures

3.2.2.1 Recessed Fluorescent Fixtures

Recessed fluorescent individual or continuous-row mounted fixtures shall be supported by a seismic-resistant suspended ceiling support system built in accordance with [ASTM E 580] [Section 09510 ACOUSTICAL CEILINGS]. Seismic protection for the fixtures shall conform to the requirements of TI 809-04, Chapter 10. Recessed lighting fixtures not over 25 kg 56 pounds in weight may be supported by and attached directly to the ceiling system runners using screws or bolts, number and size as required by the seismic design. Fixture accessories, including louvers, diffusers, and lenses shall have lock or screw attachments.

3.2.2.2 Surface-Mounted Fluorescent Fixtures

Surface-mounted fluorescent individual or continuous-row fixtures shall be attached to a seismic-resistant ceiling support system built in accordance with [ASTM E 580] [Section 09510 ACOUSTICAL CEILINGS]. Seismic protection for the fixtures shall conform to the requirements of TI 809-04, Chapter 10.

3.2.3 Assembly Mounted on Outlet Box

A supporting assembly, that is intended to be mounted on an outlet box, shall be designed to accommodate mounting features on [100] [75] mm [4] [3] inch boxes, plaster rings, and fixture studs.

3.2.4 Wall-Mounted Emergency Light Unit

Attachments for wall-mounted emergency light units shall be designed and secured for the worst expected seismic disturbance at the site.

3.2.5 Lateral Force

Structural requirements for light fixture bracing shall be in accordance with Section 13080 SEISMIC PROTECTION FOR MISCELLANIOUS EQUIPMENT.

SECTION 16375

ELECTRICAL DISTRIBUTION SYSTEM, UNDERGROUND

PART 1 GENERAL

1.1 REFERENCES

The publications listed below form a part of this specification to the extent referenced. The publications are referred to in the text by basic designation only.

AMERICAN NATIONAL STANDARDS INSTITUTE (ANSI)

ANSI C57.12.26	(1993) Pad-Mounted Compartmental-Type, Self-Cooled, Three-Phase Distribution Transformers for Use with Separable Insulated High-Voltage Connectors, High-Voltage, 34 500 Grd Y/19 920 Volts and Below; 2500 kVa and Smaller
ANSI C57.12.27	(1982) Conformance Requirements for Liquid-Filled Distribution Transformers Used in Pad-Mounted Installations, Including Unit Substations
ANSI C57.12.28	(1988) Switchgear and Transformers - Padmounted Equipment - Enclosure Integrity
ANSI C80.1	(1990) Rigid Steel Conduit - Zinc Coated
ANSI C119.1	(1986) Sealed Insulated Underground Connector Systems Rated 600 Volts
ANSI C135.30	(1988) Zinc-Coated Ferrous Ground Rods for Overhead or Underground Line Construction

AMERICAN SOCIETY FOR TESTING AND MATERIALS (ASTM)

ASTM A 48	(1994a) Gray Iron Castings
ASTM A 123	(1989a) Zinc (Hot-Dip Galvanized) Coatings on Iron and Steel Products
ASTM A 153	(1996) Zinc Coating (Hot-Dip) on Iron and Steel Hardware
ASTM B 8	(1993) Concentric-Lay-Stranded Copper Conductors, Hard, Medium-Hard, or Soft
ASTM B 117	(1994) Operating Salt Spray (Fog) Testing Apparatus

ASTM D 923	(1991) Sampling Electrical Insulating Liquids
ASTM F 883	(1990) Padlocks

ASSOCIATION OF EDISON ILLUMINATING COMPANIES (AEIC)

AEIC CS5	(1994) Specifications for Cross-linked Polyethylene Insulated Shielded Power Cables Rated 5 Through 46 kV
AEIC CS6	(1987; Rev Mar 1989) Ethylene Propylene Rubber Insulated Shielded Power Cables Rated 5 Through 69 kV

FACTORY MUTUAL ENGINEERING AND RESEARCH (FM)

FM P7825	(1995; Supple I; Supple II; Supple III) Approval Guide

FEDERAL STANDARDS (FED STD)

595A	Federal Standard Colors

INSTITUTE OF ELECTRICAL AND ELECTRONICS ENGINEERS (IEEE)

IEEE C2	(1997) National Electrical Safety Code
IEEE C37.1	(1994) IEEE Standard Definition, Specification, and Analysis of Systems Used for Supervisory Control, Data Acquisition, and Automatic Control
IEEE C37.2	(1991) Electrical Power System Device Function Numbers
IEEE C37.13	(1990) Low-Voltage AC Power Circuit Breakers Used in Enclosures
IEEE C37.20.1	(1993) Metal-Enclosed Low-Voltage Power Circuit-Breaker Switchgear
IEEE C57.12.00	(1993) IEEE Standard General Requirements for Liquid-Immersed Distribution, Power, and Regulating Transformers
IEEE C57.98	(1993) Guide for Transformer Impulse Tests
IEEE Std 48	(1996) Standard Test Procedures and Requirements for Alternating-Current Cable Terminations 2.5 kV through 765 kV

IEEE Std 81	(1983) Guide for Measuring Earth Resistivity, Ground Impedance, and Earth Surface Potentials of a Ground System (Part 1)
IEEE Std 404	(1993) Cable Joints for Use with Extruded Dielectric Cable Rated 5000 V through 46 000 V and Cable Joints for Use with Laminated Dielectric Cable Rated 2500 V Through 500 000 V
IEEE Std 590	(1977; R 1991) IEEE Cable Plowing Guide
IEEE Std 592	(1990) Exposed Semiconducting Shields on Premolded High Voltage Cable Joints and Separable Insulated Connectors

NATIONAL ELECTRICAL MANUFACTURERS ASSOCIATION (NEMA)

NEMA AB 1	(1993) Molded Case Circuit Breakers and Molded Case Switches
NEMA FB 1	(1993) Fittings, Cast Metal Boxes and Conduit Bodies for Conduit and Cable Assemblies
NEMA PB 1	(1990) Panelboards
NEMA PB 2	(1989) Deadfront Distribution Switchboards
NEMA SG 3	(1990) Low-Voltage Power Circuit Breakers
NEMA SG 5	(1990) Power Switchgear Assemblies
NEMA TC 5	(1990) Corrugated Polyolefin Coilable Plastic Utilities Duct
NEMA TC 6	(1990) PVC and ABS Plastic Utilities Duct for Underground Installation
NEMA TC 7	(1990) Smooth-Wall Coilable Polyethylene Electrical Plastic Duct
NEMA WC 7	(1993) Cross-Linked-Thermosetting-Polyethylene- Insulated Wire and Cable for the Transmission and Distribution of Electrical Energy
NEMA WC 8	(1993) Ethylene-Propylene-Rubber-Insulated Wire and Cable for the Transmission and Distribution of Electrical Energy

NATIONAL FIRE PROTECTION ASSOCIATION (NFPA)

NFPA 70	(1999) National Electrical Code

UNDERWRITERS LABORATORIES (UL)

UL 6	(1993; Rev March 96) Rigid Metal Conduit UL 198C (1986; Rev thru Jun 1993) High-Interrupting-Capacity Fuses, Current-Limiting Types UL 198D (1995) Class K Fuses
UL 198E	(1988; Rev Jul 1988) Class R Fuses UL 198H (1988; Rev thru Nov 1993) Class T Fuses
UL 467	(1993; Rev thru Aug 1996) Grounding and Bonding Equipment
UL 486A	(1991; Rev Oct 1991) Wire Connectors and Soldering Lugs for Use with Copper Conductors
UL 486B	(1991; Rev thru Oct 1996) Wire Connectors for Use with Aluminum Conductors
UL 489	(1996) Molded-Case Circuit Breakers and Circuit-Breaker Enclosures
UL 510	(1994) Insulating Tape
UL 514A	(1996) Metallic Outlet Boxes
UL 651	(1995) Schedule 40 and 80 Rigid PVC Conduit
UL 854	(1996; Rev May 1996) Service-Entrance Cables
UL 857	(1994; Rev Oct 1994) Busways and Associated Fittings
UL 1242	(1996) Intermediate Metal Conduit
UL 1684	(1993) Reinforced Thermosetting Resin Conduit

1.2 GENERAL REQUIREMENTS

1.2.1 Terminology

Terminology used in this specification is as defined in IEEE Std 100.

1.2.2 Service Conditions

Items provided under this section shall be specifically suitable for the following service conditions:

a. Altitude 1075 m

b. Ambient Temperature: Winter: -26 degrees C

Summer: 32 degrees C

c. Frequency 60 HZ

d. Seismic Zone 2B

1.3 SUBMITTALS

Governmental approval is required for submittals with a "GA" designation; submittals having an "FIO" designation are for information only. The following shall be submitted in accordance with Section 01330 SUBMITTALS:

Data

Short-Circuit and Protective Devices Coordination Studies; FIO.

Studies which demonstrate that the equipment selected and system constructed meet the contract requirements for equipment ratings, coordination, and protection. The studies shall include a complete single-line diagram of the power system covered by this specification; a short circuit study including the maximum and minimum values of short circuit currents at major buses extended down to system buses where currents are equal to 10,000 amperes symmetrical; utility company data including system voltages, fault MVA, system X/R ratio, time-current characteristic curves, current transformer ratios, and relay device numbers and settings; and existing power system data including time-current characteristic curves and protective device ratings and settings; fully coordinated composite time-current characteristic curves including recommended ratings and settings of all protective devices in tabulated form; and associated calculations to demonstrate that the power system protection will be selectively coordinated by the use of devices or equipment submitted. Situations where system coordination is not achievable due to device limitations shall be noted. The studies shall be performed by a registered professional engineer with demonstrated experience in power system coordination in the last three years. The Contractor shall provide a list of references complete with points of contact, addresses and telephone numbers. The selection of the engineer is subject to the approval of the Contracting Officer.

Manufacturer's Catalog Data; FIO.

Catalog cuts, brochures, circulars, specifications, product data, and printed information in sufficient detail and scope to verify compliance with the requirements of the contract documents.

Material, Equipment, and Fixture Lists; FIO.

A complete itemized listing of equipment and materials proposed for incorporation into the work. Each entry shall include an item number, the quantity of items proposed, and the name of the manufacturer of each such item.

Installation Procedures; FIO.

As a minimum, installation procedures for transformers, switchgear, and medium-voltage cable terminations and splices. Procedures shall include cable pulling plans, diagrams, instructions, and precautions required to install, adjust, calibrate, and test the devices and equipment.

Drawings

Electrical Distribution System; FIO.

Detail drawings consisting of equipment drawings, illustrations, schedules, instructions, diagrams manufacturers standard installation drawings and other information necessary to define the installation and enable the Government to check conformity with the requirements of the contract drawings. If departures from the contract drawings are deemed necessary by the Contractor, complete details of such departures shall be included with the detail drawings. Approved departures shall be made at no additional cost to the Government. Detail drawings shall show how components are assembled, function together and how they will be installed on the project. Data and drawings for component parts of an item or system shall be coordinated and submitted as a unit. Data and drawings shall be coordinated and included in a single submission. Multiple submissions for the same equipment or system are not acceptable except where prior approval has been obtained from the Contracting Officer. In such cases, a list of data to be submitted later shall be included with the first submission. Detail drawings shall consist of the following:

a. Detail drawings showing physical arrangement, construction details, connections, finishes, materials used in fabrication, provisions for conduit or busway entrance, access requirements for installation and maintenance, physical size, electrical characteristics, foundation and support details, and equipment weight. Drawings shall be drawn to scale and/or dimensioned. All optional items shall be clearly identified as included or excluded.

b. Internal wiring diagrams of equipment showing wiring as actually provided for this project. External wiring connections shall be clearly identified. Detail drawings shall as a minimum depict the installation of the following items:

a. Medium-voltage cables and accessories including cable installation plan.

b. Transformers.

c. Pad-mounted sectionalizing terminal.

As-Built Drawings; GA

The as-built drawings shall be a record of the construction as installed. The drawings shall include the information shown on the contract drawings as well as deviations, modifications, and changes from the contract drawings, however minor. The as-built drawings shall be a full sized set of prints marked to reflect deviations, modifications, and changes. The as-built drawings shall be complete and show the location, size, dimensions, part identification, and other information. Additional sheets may be added. The

as-built drawings shall be jointly inspected for accuracy and completeness by the Contractor's quality control representative and by the Contracting Officer prior to the submission of each monthly pay estimate. Upon completion of the work, the Contractor shall provide three full sized sets of the marked prints to the Contracting Officer for approval. If upon review, the as-built drawings are found to contain errors and/or omissions, they will be returned to the Contractor for correction. The Contractor shall correct and return the as-built drawings to the Contracting Officer for approval within 10 calendar days from the time the drawings are returned to the Contractor.

Reports

Factory Test; FIO.

Certified factory test reports shall be submitted when the manufacturer performs routine factory tests, including tests required by standards listed in paragraph REFERENCES. Results of factory tests performed shall be certified by the manufacturer, or an approved testing laboratory, and submitted within 7 days following successful completion of the tests. The manufacturer's pass-fail criteria for tests specified in paragraph FIELD TESTING shall be included.

Field Testing; GA.

A proposed field test plan, 30 days prior to testing the installed system. No field test shall be performed until the test plan is approved. The test plan shall consist of complete field test procedures including tests to be performed, test equipment required, and tolerance limits.

Test Reports; FIO.

Six copies of the information described below in 215.9 by 279.4 mm binders having a minimum of three rings, including a separate section for each test. Sections shall be separated by heavy plastic dividers with tabs.

a. A list of equipment used, with calibration certifications.

b. A copy of measurements taken.

c. The dates of testing.

d. The equipment and values to be verified.

e. The condition specified for the test.

f. The test results, signed and dated.

g. A description of adjustments made.

Cable Installation Reports; FIO.

Six copies of the information described below in 215.9 by 279.4 mm binders having a minimum of three rings from which material may readily be removed and replaced, including a separate section for each

cable pull. Sections shall be separated by heavy plastic dividers with tabs, with all data sheets signed and dated by the person supervising the pull.

a. Site layout drawing with cable pulls numerically identified.

b. A list of equipment used, with calibration certifications. The manufacturer and quantity of lubricant used on pull.

c. The cable manufacturer and type of cable.

d. The dates of cable pulls, time of day, and ambient temperature.

e. The length of cable pull and calculated cable pulling tensions.

f. The actual cable pulling tensions encountered during pull.

Certificates

Materials and Equipment; FIO.

Where materials or equipment are specified to conform to the standards of the Underwriters Laboratories (UL) or to be constructed or tested, or both, in accordance with the standards of the American National Standards Institute (ANSI), the Institute of Electrical and Electronics Engineers (IEEE), or the National Electrical Manufacturers Association (NEMA), the Contractor shall submit proof that the items provided conform to such requirements. The label of, or listing by, UL will be acceptable as evidence that the items conform. Either a certification or a published catalog specification data statement, to the effect that the item is in accordance with the referenced ANSI or IEEE standard, will be acceptable as evidence that the item conforms. A similar certification or published catalog specification data statement to the effect that the item is in accordance with the referenced NEMA standard, by a company listed as a member company of NEMA, will be acceptable as evidence that the item conforms. In lieu of such certification or published data, the Contractor may submit a certificate from a recognized testing agency equipped and competent to perform such services, stating that the items have been tested and that they conform to the requirements listed, including methods of testing of the specified agencies. Compliance with above-named requirements does not relieve the Contractor from compliance with any other requirements of the specifications.

Cable Splicer Qualification; FIO.

A certification that contains the names and the qualifications of people recommended to perform the splicing and termination of medium-voltage cables approved for installation under this contract. The certification shall indicate that any person recommended to perform actual splicing and terminations has been adequately trained in the proper techniques and have had at least three recent years of experience in splicing and terminating the same or similar types of cables approved for installation. In addition, any person recommended by the Contractor may be required to perform a practice splice and termination, in the presence of the Contracting Officer, before being approved as a qualified installer of medium-voltage cables. If that additional requirement is imposed, the Contractor shall provide short sections of the approved types of cables along with the approved type of splice and termination kits, and detailed manufacturer's instruction for the proper splicing and termination of the approved cable types.

Cable Installer Qualifications; FIO.

The Contractor shall provide at least one onsite person in a supervisory position with a documentable level of competency and experience to supervise all cable pulling operations. A resume shall be provided showing the cable installers' experience in the last three years, including a list of references complete with points of contact, addresses and telephone numbers.

Operation and Maintenance Manuals

Electrical Distribution System; GA.

Six copies of Operation and Maintenance manuals, within 7 calendar days following the completion of tests and including assembly, installation, operation and maintenance instructions, spare parts data which provides supplier name, current cost, catalog order number, and a recommended list of spare parts to be stocked. Manuals shall also include data outlining detailed procedures for system startup and operation, and a troubleshooting guide which lists possible operational problems and corrective action to be taken. A brief description of all equipment, basic operating features, and routine maintenance requirements shall also be included. Documents shall be bound in a binder marked or identified on the spine and front cover. A table of contents page shall be included and marked with pertinent contract information and contents of the manual. Tabs shall be provided to separate different types of documents, such as catalog ordering information, drawings, instructions, and spare parts data. Index sheets shall be provided for each section of the manual when warranted by the quantity of documents included under separate tabs or dividers. Three additional copies of the instructions manual, within 30 calendar days following the approval of the manuals.

1.4 DELIVERY, STORAGE, AND HANDLING

Devices and equipment shall be visually inspected by the Contractor when received and prior to acceptance from conveyance. Stored items shall be protected from the environment in accordance with the manufacturer's published instructions. Damaged items shall be replaced. Oil filled transformers and switches shall be stored in accordance with the manufacturer's requirements.

1.5 EXTRA MATERIALS

One additional spare fuse or fuse element for each furnished fuse or fuse element shall be delivered to the contracting officer when the electrical system is accepted. Two complete sets of all special tools required for maintenance shall be provided, complete with a suitable tool box. Special tools are those that only the manufacturer provides, for special purposes (to access compartments, or operate, adjust, or maintain special parts).

PART 2 PRODUCTS

2.1 STANDARD PRODUCT

Material and equipment shall be the standard product of a manufacturer regularly engaged in the manufacture of the product and shall essentially duplicate items that have been in satisfactory use for at least 2 years prior to bid opening. Items of the same classification shall be identical including equipment, assemblies, parts, and components.

2.2 NAMEPLATES

2.2.1 General

Each major component of this specification shall have the manufacturer's name, address, type or style, model or serial number, and catalog number on a nameplate securely attached to the equipment. Nameplates shall be made of noncorrosive metal. Equipment containing liquid dielectrics shall have the type of dielectric on the nameplate. Sectionalizer switch nameplates shall have a schematic with all switch positions shown and labeled. As a minimum, nameplates shall be provided for transformers, circuit breakers, meters, switches, and switchgear.

2.2.2 Liquid-Filled Transformer Nameplates

Nameplates shall indicate percent impedance, voltage, kVA, frequency, number of phases, cooling class, insulation class, temperature rise, the number of liters and composition of liquid-dielectric, and shall be permanently marked with a statement that the dielectric supplied is non-polychlorinated biphenyl. If transformer nameplate is not so marked, the Contractor shall furnish manufacturer's certification for each transformer that the dielectric is non-PCB classified, with less than 1 ppm PCB content in accordance with paragraph LIQUID DIELECTRICS. Certifications shall be related to serial numbers on transformer nameplates. Transformer dielectric exceeding the 1 ppm PCB content or transformers without certification will be considered as PCB insulated and will not be accepted.

2.3 CORROSION PROTECTION

2.3.1 Aluminum Materials

Aluminum shall not be used in contact with earth or concrete. Where aluminum conductors are connected to dissimilar metal, fittings conforming to UL 486B shall be used.

2.3.2 Ferrous Metal Materials

2.3.2.1 Hardware

Ferrous metal hardware shall be hot-dip galvanized in accordance with ASTM A 153 and ASTM A 123.

2.3.2.2 Equipment

Equipment and component items, including but not limited to transformer stations and ferrous metal luminaries not hot-dip galvanized or porcelain enamel finished, shall be provided with corrosion-resistant finishes which shall withstand 120 hours of exposure to the salt spray test specified in ASTM B 117 without loss of paint or release of adhesion of the paint primer coat to the metal surface in excess of 1.6 mm from the test mark. The scribed test mark and test evaluation shall be in accordance with ASTM D 1654 with a rating of not less than 7 in accordance with TABLE 1, (procedure A). Cut edges or otherwise damaged surfaces of hot-dip galvanized sheet steel or mill galvanized sheet steel shall be coated with a zinc rich paint conforming to the manufacturer's standard.

2.3.3 Finishing

Painting required for surfaces not otherwise specified and finish painting of items only primed at the factory shall be as specified in Section 09900 PAINTING, GENERAL.

2.4 CABLES

Cables shall be single conductor type unless otherwise indicated.

2.4.1 Conductor Material

Underground cables shall be of soft drawn copper.

2.4.2 Medium-Voltage Cables

The 15 KV conductors to be installed under this Contract shall be manufactured by Cablec, and shall meet the following specifications.

(1) The cable shall be Unishield, EP, 15 KV power cable, #AP 19161, single copper conductor, size as specified in the drawings with Class B stranding, extruded strand shield, ethylene propylene type insulation (133% level), and corrugated copper shielding drain wires.

(2) The cable shall meet ICEA #S-68-516, AEIC #CS6, and IEEE #383 Standards.

(3) Cable shall be UL-listed as Type MV-90 and have a chlorinated polythylene jacket.

2.4.3 Low-Voltage Cables

Cables shall be rated 600 volts and shall conform to the requirements of NFPA 70. Cables shall utilize ethylene-propylene-rubber (EPR) insulation and shall conform to the requirements of NEMA WC 8.

2.4.3.1 In Duct

Cables shall be single-conductor cable, Type RHW, THW, THWN, TW, USE, or XHHW in accordance with NFPA 70. Cables in factory-installed, coilable-plastic-duct assemblies shall conform to NEMA TC 5 or NEMA TC 7.

2.5 CABLE JOINTS, TERMINATIONS, AND CONNECTORS

2.5.1 Medium-Voltage Cable Joints

Medium-voltage cable joints shall comply with IEEE Std 404 and IEEE Std 592. Medium-voltage cable terminations shall comply with IEEE Std 48. Joints shall be the standard products of a manufacturer and shall be either of the factory preformed type or of the kit type containing tapes and other required parts. Joints shall have ratings not less than the ratings of the cables on which they are installed. Splice kits may be of the heat-shrinkable type for voltages up to 15 kV, of the premolded splice and connector type, the conventional taped type, or the resin pressure-filled overcast taped type for voltages up to 35 kV; except that for voltages of 7.5 kV or less a resin pressure-filled type utilizing a plastic-tape mold is acceptable. Joints used in manholes, handholes, vaults and pull boxes shall be certified by the manufacturer for

waterproof, submersible applications. There shall be no conductor splice in raceway or conduits. There shall be no splice in 15KV cables.

2.5.2 Medium-Voltage Separable Insulated Connectors

Separable insulated connectors shall comply with IEEE Std 386 and IEEE Std 592 and shall be of suitable construction or standard splice kits shall be used. Separable insulated connectors are acceptable for voltages up to 35 kV. Connectors shall be of the loadbreak type as indicated, of suitable construction for the application and the type of cable connected, and shall include cable shield adaptors. Separable insulated connectors shall not be used as substitutes for conventional permanent splices. External clamping points and test points shall be provided.

2.5.3 Low-Voltage Cable Splices

Low-voltage cable splices and terminations shall be rated at not less than 600 Volts. Splices in conductors No. 10 AWG and smaller shall be made with an insulated, solderless, pressure type connector, conforming to the applicable requirements of UL 486A. Splices in conductors No. 8 AWG and larger shall be made with noninsulated, solderless, pressure type connector, conforming to the applicable requirements of UL 486A and UL 486B. Splices shall then be covered with an insulation and jacket material equivalent to the conductor insulation and jacket. Splices below grade or in wet locations shall be sealed type conforming to ANSI C119.1 or shall be waterproofed by a sealant-filled, thick wall, heat shrinkable, thermosetting tubing or by pouring a thermosetting resin into a mold that surrounds the joined conductors.

2.5.4 Terminations

Terminations shall be in accordance with IEEE Std 48, Class 1 or Class 2; of the molded elastomer, wet-process porcelain, prestretched elastomer, heat-shrinkable elastomer, or taped type. Acceptable elastomers are track-resistant silicone rubber or track-resistant ethylene propylene compounds, such as ethylene propylene rubber or ethylene propylene diene monomer. Separable insulated connectors may be used for apparatus terminations, when such apparatus is provided with suitable bushings. Terminations shall be of the outdoor type, except that where installed inside outdoor equipment housings which are sealed against normal infiltration of moisture and outside air, indoor, Class 2 terminations are acceptable. Class 3 terminations are not acceptable. Terminations, where required, shall be provided with mounting brackets suitable for the intended installation and with grounding provisions for the cable shielding, metallic sheath, and armor.

2.5.4.1 Factory Preformed Type

Molded elastomer, wet-process porcelain, prestretched, and heat-shrinkable terminations shall utilize factory preformed components to the maximum extent practicable rather than tape build-up. Terminations shall have basic impulse levels as required for the system voltage level.

2.5.4.2 Taped Terminations

Taped terminations shall use standard termination kits providing terminal connectors, field-fabricated stress cones, and rain hoods. Terminations shall be at least 510 mm long from the end of the tapered cable

jacket to the start of the terminal connector, or not less than the kit manufacturer's recommendations, whichever is greater.

2.6 CONDUIT AND DUCTS

Duct lines shall be concrete encased, thin wall type. Low voltage lines run elsewhere may be direct burial, thick wall type.

2.6.1 Metallic Conduit

Intermediate metal conduit shall comply with UL 1242. Rigid galvanized steel conduit shall comply with UL 6 and ANSI C80.1. Metallic conduit fittings and outlets shall comply with UL 514A and NEMA FB 1.

2.6.2 Nonmetallic Ducts

2.6.2.1 Concrete Encased Ducts

UL 651 Schedule 40 or NEMA TC 6 Type EB.

2.6.2.2 Direct Burial

UL 651 Schedule 80, or NEMA TC 6 Type DB.

2.6.3 Conduit Sealing Compound

Compounds for sealing ducts and conduit shall have a putty-like consistency workable with the hands at temperatures as low as 2 degrees C, shall neither slump at a temperature of 150 degrees C, nor harden materially when exposed to the air. Compounds shall adhere to clean surfaces of fiber or plastic ducts; metallic conduits or conduit coatings; concrete, masonry, or lead; any cable sheaths, jackets, covers, or insulation materials; and the common metals. Compounds shall form a seal without dissolving, noticeably changing characteristics, or removing any of the ingredients. Compounds shall have no injurious effect upon the hands of workmen or upon materials.

2.7 SIDEWALK BOXES

2.7.1 Units

Units shall be non-metallic, open bottom, with lid, manufactured by Associated Plastic, Inc. or approved equal.

(1) For the Base Communications system, sidewalk box(es) along the main ductbanks shall be by Associated Plastic, Inc., or approved equal, shall be used with opening dimensions of 962 mm x 667 mm and 660 mm deep. The lid shall have a wheel load of 92.6 kN over 245 mm x 490 mm plate, and shall be labelled “TELEPHONE” by the manufacturer.

(2) For the Low Voltage, Cable TV, and Fiber Optic systems, sidewalk box(es) shall be used with opening dimensions of 445 mm x 775 mm and 445 mm deep. The lid shall have a wheel load of 66.8 kN over 245 mm x 245 mm plate. U.S. West shall use their own pedestals/sidewalk boxes. TCI shall use

sidewalk boxes near buildings and their own pedestals out near the street. Labelling by the manufacturer on the lids shall be as follows:

ITEM	LABEL
Low Voltage	Electric
Cable TV	Cable TV
Fiber Optic	Fiber Optic Cable
Base Comm	Telephone

2.7.2 Supports

Provide nonmetallic base and intermediate spacers, such as Carlon Snap-Loc, with 3 inch separation, specifically manufactured for supporting PVC that is encased in concrete. They shall be arranged and spaced per the manufacturer's recommendations.

2.8 TRANSFORMERS

Transformers, substations, and switchgear shall be of the outdoor type having the ratings and arrangements indicated. Medium-voltage ratings of cable terminations shall be 15 kV between phases for 133 percent insulation level.

2.8.1 Pad-Mounted Transformers

Pad-mounted transformers shall comply with ANSI C57.12.26 and shall be of the loop feed type. Pad-mounted transformer stations shall be assembled and coordinated by one manufacturer and each transformer station shall be shipped as a complete unit so that field installation requirements are limited to mounting each unit on a concrete pad and connecting it to primary and secondary lines. Stainless steel pins and hinges shall be provided. Barriers shall be provided between high- and low-voltage compartments. High-voltage compartment doors shall be interlocked with low-voltage compartment doors to prevent access to any high-voltage section unless its associated low-voltage section door has first been opened. Compartments shall be sized to meet the specific dimensional requirements of ANSI C57.12.26. Pentahead locking bolts shall be provided with provisions for a padlock.

2.8.1.1 High-Voltage Compartments

High-voltage compartments shall be dead-front construction. Primary protection shall include loadbreak switching, drawout dry-well-mounted current-limiting fuses, and medium-voltage separable connectors, and surge arresters. Switches shall be of the group-operated type. Switches may be mounted inside transformer tanks with switch operating handles located in high-voltage compartments and equipped with metal loops for hook stick operation. Fuses shall be interlocked with switches so that fuses can be removed only when the associated switch is in the "OFF" position. Adjacent to medium-voltage cable connections, a nameplate or equivalent stenciled inscription shall be provided inscribed "DO NOT OPEN CABLE CONNECTORS UNLESS SWITCH IS OFF." Adjacent to switches, nameplates shall identify switch operating handles and "ON" and "OFF" positions. Surge arresters shall be fully insulated and

configured to terminate on the same bushing as the primary cable by means of a loadbreak, feed-through bushing insert. The transformer shall have copper windings.

2.8.1.2 Transformer Tank Sections

Transformers shall comply with IEEE C57.12.00, and ANSI C57.12.26 and shall be of the mineral oil-insulated type. Transformers shall be suitable for outdoor use and shall have 2 separate windings per phase. Standard NEMA primary taps shall be provided. Where primary taps are not specified, 4, 2½ percent rated kVA high-voltage taps shall be provided 2 above and 2 below rated, primary voltage. Operating handles for primary tap changers for de-energized operation shall be located within high-voltage compartments, externally to transformer tanks. Adjacent to the tap changer operating handle, a nameplate or equivalent stenciled inscription shall be provided and inscribed "DO NOT OPERATE UNDER LOAD." Transformer ratings at 60 Hz shall be as follows:

Three-phase capacity	As Noted
Impedance	5.75%
Temperature rise	65 degrees C
High-voltage winding	As Indicated
High-voltage winding connections	As Indicated
Low-voltage winding	As Indicated
Low-voltage winding connections	As Indicated

High-voltage and low voltage windings shall be copper.

2.8.1.3 Low-Voltage Cable Compartments

Neutrals shall be provided with fully-insulated bushings. Clamp type cable terminations, suitable for copper conductors entering from below, shall be provided as necessary.

2.8.1.4 Accessories

High-voltage warning signs shall be permanently attached to each side of transformer stations. Voltage warning signs shall comply with ANSI C2. Copper-faced steel or stainless steel ground connection pads shall be provided in both the high- and low-voltage compartments. Dial-type thermometer, liquid-level gauge, and drain valve with built-in sampling device shall be provided for each transformer station. Insulated-bushing-type parking stands shall be provided adjacent to each separable load-break elbow to provide for cable isolation during sectionalizing operations.

2.9 DELETED

2.10 LOADBREAK CONNECTORS:

Loadbreak modules and elbows will be manufactured by Cooper Power System (CPS) or approved equal. These devices are to be used in manholes, switches, and sectionalizer boxes.

2.10.1 Module shall be CPS LBC 4-way rated for 200A, 15KV per ANSI 386. Module shall include 1 each parking stand bushing and dust cap.

2.10.2 200A Elbows: Elbows for the #2 tap conductors will be 200A, 15 KV – CPS # 2604599B --- or approved equal.

2.10.3 Cable Shield Adaptors: CPS cable shield adaptor kits shall be used on all 200A and 600A elbows.

2.11 METERING AND PROTECTIVE DEVICES

2.11.1 Circuit Breakers, Low-Voltage

2.11.1.1 Low-Voltage Power Circuit Breakers

a. Construction Low-voltage power circuit breakers shall conform to IEEE C37.13, ANSI C37.16 and NEMA SG 3 and shall be three-pole, single-throw, stored energy, manually operated, with drawout mounting. Solid-state trip elements which require no external power connections shall be provided. Circuit breakers shall have an open/close contact indicator, primary disconnect devices, and a mechanical interlock to prevent making or breaking contact of primary disconnections when the circuit breaker is closed. Control voltage shall be as indicated. The circuit breaker enclosure shall be suitable for its intended location.

b. Ratings Voltage ratings shall be not less than the applicable circuit voltage. Circuit breakers shall be rated for 100 percent continuous duty and shall have trip current ratings and frame sizes as shown. Nominal voltage ratings, maximum continuous-current ratings, and maximum short-circuit interrupting ratings shall be in accordance with ANSI C37.16.

2.11.1.2 Molded-Case Circuit Breakers

Shall comply with specification section 16415 - ELECTRICAL WORK, INTERIOR.

2.12 GROUNDING AND BONDING

2.12.1 Driven Ground Rods

Ground rods shall be copper-clad steel conforming to UL 467 not less than 19 mm in diameter by 3.1 m in length. Sectional type rods may be used.

2.12.2 Grounding Conductors

Grounding conductors shall be bare, except where installed in conduit with associated phase conductors. Insulated conductors shall be of the same material as phase conductors and green color-coded, except that conductors shall be rated no more than 600 volts. Bare conductors shall be ASTM B 8 soft-drawn unless otherwise indicated. Aluminum is not acceptable.

2.13 CONCRETE AND REINFORCEMENT

Concrete shall be a minimum of 17.3 MPa at 28 days. All other requirements shall be as specified in Section 03300 CAST-IN-PLACE STRUCTURAL CONCRETE. Concrete reinforcing shall be as specified in Section 03200 CONCRETE REINFORCEMENT.

2.14 PADLOCKS

Padlocks shall conform to ASTM F 883, Type EPC, size 2.

2.15 CABLE FIREPROOFING SYSTEMS

Cable fireproofing systems shall be listed in FM P7825 as a fire-protective coating or tape approved for grouped electrical conductors and shall be suitable for application on the type of medium-voltage cables provided. After being fully cured, materials shall be suitable for use where exposed to oil, water, gases, salt water, sewage, and fungus and shall not damage cable jackets or insulation. Asbestos materials are not acceptable.

2.15.1 Fireproof Coating

Cable fireproofing coatings shall be compounded of water-based thermoplastic resins, flame-retardant chemicals, and inorganic noncombustible fibers and shall be suitable for the application methods used. Coatings applied on bundled cables shall have a derating factor of less than 5 percent, and a dielectric strength of 95 volts per mil minimum after curing.

2.15.2 Fireproofing Tape

Fireproofing tape shall be at least 50 mm wide and shall be a flexible, conformable, polymeric, elastomer tape designed specifically for fireproofing cables.

2.15.3 Plastic Tape

Preapplication plastic tape shall be pressure sensitive, 0.254 mm thick, conforming to UL 510.

2.16 LIQUID DIELECTRICS

Liquid dielectrics for transformers, capacitors, reclosers, and other liquid-filled electrical equipment shall be non-polychlorinated biphenyl (PCB) mineral-oil or less-flammable liquid as specified. Nonflammable fluids shall not be used. Tetrachloroethylene (perchloroethylene) and 1, 2, 4 trichlorobenzene fluids shall not be used. Liquid dielectrics in retrofitted equipment shall be certified by the manufacturer as having less than 10 parts per million (ppm) PCB content. In lieu of the manufacturer's certification, the Contractor may submit a test sample of the dielectric in accordance with ASTM D 923 and have tests performed per ASTM D 4059 at a testing facility approved by the Contracting Officer. Equipment with test results indicating PCB level exceeding 10 ppm shall be replaced.

2.17 FACTORY TESTS

Factory tests shall be performed, as follows, in accordance with the applicable publications and with other requirements of these specifications. The Contracting Officer shall be notified at least 10 days before the equipment is ready for testing. The Contracting Officer reserves the right to witness the tests.

a. Transformers:Manufacturer's standard routine tests in accordance with IEEE C57.12.00.

b. Transformers rated 200 kVA and above:Reduced full-wave, chopped-wave, and full-wave impulse test on each line and neutral terminal, in accordance with IEEE C57.98.

c. High-Voltage Air Switches:Manufacturer's standard tests in accordance with IEEE C37.34 and IEEE C37.41.

d. Factory Preformed Terminations: Wet withstand voltage tests in accordance with IEEE Std 48 for the next higher BIL level.

e. Electrical Power Insulators: Manufacturer's standard tests in accordance with ANSI C29.1.

PART 3 EXECUTION

3.1 GENERAL INSTALLATION REQUIREMENTS

Equipment and devices shall be installed and energized in accordance with the manufacturer's published instructions. Steel conduits installed underground shall be installed and protected from corrosion in conformance with the requirements of Section 16415 - ELECTRICAL WORK, INTERIOR. Except as covered herein, excavation, trenching, and back filling shall conform to the requirements of Section 02316 - EXCAVATION, TRENCHING, AND BACKFILLING FOR UTILITIES SYSTEMS. Concrete work shall conform to the requirements of Section 03300A CONCRETE FOR DUMPSTER PADS.

3.1.1 Conformance to Codes

The installation shall comply with the requirements and recommendations of NFPA 70 and ANSI C2 as applicable.

3.1.2 Verification of Dimensions

The Contractor shall become familiar with details of the work, shall verify dimensions in the field, and shall advise the Contracting Officer of any discrepancy before performing any work.

3.1.3 Disposal of Liquid Dielectrics

PCB-contaminated dielectrics must be marked as PCB and transported to and incinerated by an approved EPA waste disposal facility. The Contractor shall furnish certification of proper disposal. Contaminated dielectrics shall not be diluted to lower the contamination level.

3.2 CABLE AND BUSWAY INSTALLATION

The Contractor shall obtain from the manufacturer an installation manual or set of instructions which addresses such aspects as cable construction, insulation type, cable diameter, bending radius, cable temperature, lubricants, coefficient of friction, conduit cleaning, storage procedures, moisture seals, testing for and purging moisture, etc. The Contractor shall then perform pulling calculations and prepare a pulling

plan which shall be submitted along with the manufacturers instructions in accordance with specification section 01330 - SUBMITTALS.

3.2.1 Cable Installation Plan and Procedure

Cable shall be installed strictly in accordance with the cable manufacturer's recommendations. Each circuit shall be identified by means of a fiber, laminated plastic, or non-ferrous metal tags, or approved equal, in each manhole, handhole, junction box, and each terminal. Each tag shall contain the following information; cable type, conductor size, circuit number, circuit voltage, cable destination and phase identification.

3.2.1.1 Cable Inspection

The cable reel shall be inspected for correct storage positions, signs of physical damage, and broken end seals. If end seal is broken, moisture shall be removed from cable in accordance with the cable manufacturer's recommendations.

3.2.1.2 Duct Cleaning

Duct shall be cleaned with an assembly that consists of a flexible mandrel (manufacturers standard product in lengths recommended for the specific size and type of duct) that is 6.4 mm less than inside diameter of duct, 2 wire brushes, and a rag. The cleaning assembly shall be pulled through conduit a minimum of 2 times or until less than a volume of 131 cubic centimeters of debris is expelled from the duct.

3.2.1.3 Duct Lubrication

The cable lubricant shall be compatible with the cable jacket for cable that is being installed. Application of lubricant shall be in accordance with lubricant manufacturer's recommendations.

3.2.1.4 Cable Installation

The Contractor shall provide a cable feeding truck and a cable pulling winch as required. The Contractor shall provide a pulling grip or pulling eye in accordance with cable manufacturer's recommendations. The pulling grip or pulling eye apparatus shall be attached to polypropylene or manilla rope followed by lubricant front end packs and then by power cables. A dynamometer shall be used to monitor pulling tension. Pulling tension shall not exceed cable manufacturer's recommendations. The Contractor shall not allow cables to cross over while cables are being fed into duct. For cable installation in cold weather, cables shall be kept at 10 degrees C temperature for at least 24 hours before installation.

3.2.1.5 Cable Installation Plan

The Contractor shall submit a cable installation plan for all cable pulls in accordance with the detail drawings portion of paragraph SUBMITTALS. Cable installation plan shall include:

a. Site layout drawing with cable pulls identified in numeric order of expected pulling sequence and direction of cable pull.

b. List of cable installation equipment.

c. Lubricant manufacturer's application instructions.

d. Procedure for resealing cable ends to prevent moisture from entering cable.

e. Cable pulling tension calculations of all cable pulls.

f. Cable percentage conduit fill.

g. Cable side wall thrust pressure.

h. Cable minimum bend radius and minimum diameter of pulling wheels used.

i. Cable jam ratio.

j. Maximum allowable pulling tension on each different type and size of conductor.

k. Maximum allowable pulling tension on pulling device.

3.2.1.6 15KV conductors shall be color-tape coded to identify each phase. At each manhole, switch, transformer, and sectionizer.

3.2.2 Duct Line

Cables shall be installed in duct lines where indicated. Neutral and grounding conductors shall be installed in the same duct with their associated phase conductors.

3.3 CABLE JOINTS

Medium-voltage cable joints shall be made by qualified cable splicers only. Qualifications of cable splicers shall be submitted in accordance with paragraph SUBMITTALS. Shields shall be applied as required to continue the shielding system through each entire cable joint. Shields may be integrally molded parts of preformed joints. Shields shall be grounded at each joint or in accordance with manufacturer's recommended practice. Cable joints shall provide insulation and jacket equivalent to that of the associated cable. Armored cable joints shall be enclosed in compound-filled, cast-iron or alloy, splice boxes equipped with stuffing boxes and armor clamps of a suitable type and size for the cable being installed.

3.4 FIREPROOFING

Each medium-voltage cable and conductor in manholes shall be fire-proofed for their entire length within the manhole. Where cables and conductors have been lubricated to enhance pulling into ducts, the lubricant shall be removed from cables and conductors exposed in the manhole before fireproofing. Fire-stops shall be installed in each conduit entering or leaving a manhole.

3.4.1 Tape Method

Before application of fireproofing tape, plastic tape wrapping shall be applied over exposed metallic items such as the cable ground wire, metallic outer covering, or armor to minimize the possibility of corrosion from the fireproofing materials and moisture. Before applying fireproofing tape, irregularities of cables, such as at cable joints, shall be evened out with insulation putty. A flexible conformable polymeric

elastomer fireproof tape shall be wrapped tightly around each cable spirally in 1/2 lapped wrapping or in 2 butt-jointed wrappings with the second wrapping covering the joints of the first.

3.5 DUCT LINES

3.5.1 Requirements

Numbers and sizes of ducts shall be as indicated. Duct lines shall be laid with a minimum slope of 100 mm per 30 m. Depending on the contour of the finished grade, the high-point may be at a terminal, a manhole, a handhole, or between manholes or handholes. Short-radius manufactured 90-degree duct bends may be used only for pole or equipment risers, unless specifically indicated as acceptable. The minimum manufactured bend radius shall be 450 mm for ducts of less than 80 mm diameter, and 900 mm for ducts 80 mm or greater in diameter. Otherwise, long sweep bends having a minimum radius of 7.6 m shall be used for a change of direction of more than 5 degrees, either horizontally or vertically. Both curved and straight sections may be used to form long sweep bends, but the maximum curve used shall be 30 degrees and manufactured bends shall be used. Ducts shall be provided with end bells whenever duct lines terminate in manholes or handholes.

3.5.2 Treatment

Ducts shall be kept clean of concrete, dirt, or foreign substances during construction. Field cuts requiring tapers shall be made with proper tools and match factory tapers. A coupling recommended by the duct manufacturer shall be used whenever an existing duct is connected to a duct of different material or shape. Ducts shall be stored to avoid warping and deterioration with ends sufficiently plugged to prevent entry of any water or solid substances. Ducts shall be thoroughly cleaned before being laid. Plastic ducts shall be stored on a flat surface and protected from the direct rays of the sun.

3.5.3 Concrete Encasement

Ducts requiring concrete encasements shall comply with NFPA 70, except that electrical duct bank configurations for ducts 150 mm in diameter shall be determined by calculation and as shown on the drawings. The separation between adjacent electric power and communication ducts shall conform to ANSI C2. Duct line encasements shall be monolithic construction. Where a connection is made to a previously poured encasement, the new encasement shall be well bonded or doweled to the existing encasement. The Contractor shall submit proposed bonding method for approval in accordance with the detail drawing portion of paragraph SUBMITTALS. At any point, except railroad and airfield crossings, tops of concrete encasements shall be not less than the cover requirements listed in NFPA 70. Where ducts are jacked under existing pavement, rigid steel conduit will be installed because of its strength. To protect the corrosion-resistant conduit coating, predrilling or installing conduit inside a larger iron pipe sleeve (jack-and-sleeve) is required. Separators or spacing blocks shall be made of steel, concrete, plastic, or a combination of these materials placed not farther apart than 1.2 m on centers. Ducts shall be securely anchored to prevent movement during the placement of concrete and joints shall be staggered at least 150 mm vertically.

3.5.4 Installation of Couplings

Joints in each type of duct shall be made up in accordance with the manufacturer's recommendations for the particular type of duct and coupling selected and as approved.

3.5.4.1 Plastic Duct

Duct joints shall be made by brushing a plastic solvent cement on insides of plastic coupling fittings and on outsides of duct ends. Each duct and fitting shall then be slipped together with a quick 1/4-turn twist to set the joint tightly.

3.5.5 Duct Line Markers

Duct line markers shall be provided at the ends of long duct line stubouts or for other ducts whose locations are indeterminate because of duct curvature or terminations at completely below-grade structures. In addition to markers, a 0.127 mm brightly colored plastic tape, not less than 75 mm in width and suitably inscribed at not more than 3 m on centers with a continuous metallic backing and a corrosion-resistant 0.0254 mm metallic foil core to permit easy location of the duct line, shall be placed approximately 300 mm below finished grade levels of such lines.

3.6 SIDEWALK BOXES

(1) Sidewalk boxes shall be installed flush with the ground.

(2) Conduits shall sweep up into the boxes from the bottom.

(3) Elevations and locations of the tops of the conduits shall be such that they meet the recommendations of the cable manufacturer and the code relative to minimum cable bending radii.

(4) Compaction, backfill, and revegetation per specification section 02316 - EXCAVATION, TRENCHING, AND BACKFILLING FOR UTILITIES SYSTEMS applies.

(5) All circuits rising into sidewalk boxes shall be labelled as to what it is; e.g., recloser control circuit, street lighting circuit, sump pump circuit, etc.

(6) The earth inside sidewalk boxes shall be covered with 12 mm to 25 mm screened gravel.

3.7 GROUND RODS

A ground rod shall be installed at the manholes, handholes and pullboxes. Ground rods shall be driven into the earth before the manhole floor is poured so that approximately 100 mm of the ground rod will extend above the manhole floor. When precast concrete manholes are used, the top of the ground rod may be below the manhole floor and a No. 1/0 AWG ground conductor brought into the manhole through a watertight sleeve in the manhole wall.

3.8 PAD-MOUNTED EQUIPMENT INSTALLATION

Pad-mounted equipment, shall be installed on concrete pads in accordance with the manufacturer's published, standard installation drawings and procedures, except that they shall be modified to meet the requirements of this document. Units shall be installed so that they do not damage equipment or scratch painted or coated surfaces. After installation, surfaces shall be inspected and scratches touched up with a paint or coating provided by the manufacturer especially for this purpose. Three-phase transformers shall be installed with phase sequence as indicated by the Contracting Officer. Primary taps shall be set to obtain secondary voltage required.

3.8.1 Concrete Pads

3.8.1.1 Construction

Concrete pads for pad-mounted electrical equipment may be either pre-fabricated or poured-in-place. Pads shall be constructed as indicated, except that exact pad dimensions and mounting details are equipment specific and are the responsibility of the Contractor. Tops of concrete pads shall be level and shall project 100 mm above finished paving or grade and sloped to drain. Edges of concrete pads shall have 20 mm chamfer. Conduits for primary, secondary, and grounding conductors shall be set in place prior to placement of concrete pads. Where grounding electrode conductors are installed through concrete pads, PVC conduit sleeves shall be installed through the concrete to provide physical protection. To facilitate cable installation and termination, the concrete pad shall be provided with a rectangular hole below the primary and secondary compartments, sized in accordance with the manufacturer's recommended dimensions. Upon completion of equipment installation the rectangular hole shall be filled with masonry grout.

3.8.1.2 Concrete and Reinforcement

Concrete work shall comply with the requirements of Section 03300 CONCRETE FOR DUMPSTER PADS. Concrete pad reinforcement shall be in accordance with Section 03200 CONCRETE REINFORCEMENT.

3.8.1.3 Sealing

When the installation is complete, the Contractor shall seal all conduit and other entries into the equipment enclosure with an approved sealing compound. Seals shall be of sufficient strength and durability to protect all energized live parts of the equipment from rodents, insects, or other foreign matter.

3.9 DELETED

3.10 CONNECTIONS TO BUILDINGS

Cables shall be extended into the various buildings as indicated, and shall be connected to the first applicable termination point in each building. Interfacing with building interior conduit systems shall be at conduit stubouts terminating 1.5 m outside of a building and 600 mm below finished grade as specified and provided under Section 16415 ELECTRICAL WORK, INTERIOR. After installation of cables, conduits shall be sealed with caulking compound to prevent entrance of moisture or gases into buildings.

3.11 EQUIPMENT EXTERIOR PAINT COLOR

All exterior, panels, transformers, and sectionalizers shall have an exterior baked-on enamel coating, color of Federal Standard 595a No. 23578, Antique Linen.

3.12 LIGHTING

3.12.1 Area Lights

Area Lights shall be of the enclosed general-purpose type having indicated beam spreads and adjustable support brackets suitable for required mountings. Where indicated, floodlights shall be equipped with

weather-proof plug-in or twist-lock receptacles to receive photo-control elements. Lamps shall be of the sizes and types indicated and provided with appropriate ballasts.

3.12.2 Light Fixtures

3.12.2.1 Sidewalk Parking Lot: Kim No. EKG401, or approved equal; Kim, No. EKG501, or approved equal with the following features:

Type 3, Cutoff Distribution, impact resistant clear tempered glass lens, weather tight sealed housing, hinged housing with self-locking support arms for maintenance/servicing access, unitized electrical assembly with disconnect plugs and high power factor ballast (greater than 90%).

3.12.2.2 Other Parameters for Fixtures:

208 VAC Ballast, aluminum with dark Bronze duranodic finish, fusing at base of pole. See drawings for locations using different voltages.

3.12.3 Poles

Lighting poles shall be of indicated lengths and of aluminum. Poles shall be suitable for use with underground supply conductors. Poles shall be designed for a wind velocity of 130 km/h at the base of the pole, for a wind gust factor of 1.3, and for the height and drag factors recommended by AASHTO LTS-2. The effective projected area of luminaries and other pole-mounted devices shall be taken into account in pole design. Poles shall have grounding provisions. Bases shall be of the anchor-bolt-mounted type. The type of pole shaft material provided shall not be mixed on any project.

3.12.3.1 Pole Vibration Dampers

All poles shall have vibration dampers to control harmonic distortion from 32 kilometers per hour sustained winds.

3.12.3.2 Brackets

Brackets for area lighting shall be of the indicated types. Brackets for area lights shall have the number of tenons indicated. Slip-fitter brackets shall be coordinated with the luminaries provided, and brackets used with one type of luminaire shall be identical. Brackets shall be not less than 50 mm galvanized steel pipe or equivalent aluminum. On metal poles, brackets shall be of the same metal.

3.12.3.3 Aluminum Poles

Aluminum poles and aluminum brackets shall be anodized aluminum with dark duranodic bronze finish as indicated to match lighting fixtures and shall not be painted.

3.12.3.4 Pole Setting

Poles shall be mounted on cast-in-place or power-installed screw foundations. Where indicated, concrete poles shall be embedded in accordance with the details shown. Conduit ells shall be provided for cable entrances into pole interiors.

a. Cast-In-Place Foundations: Concrete foundations, sized as indicated, shall have anchor bolts accurately set in foundations using templates supplied by the pole manufacturer. After the concrete has cured, pole anchor bases shall be set on foundations and leveled by shimming between anchor bases and foundations or by setting anchor bases on leveling nuts and grouting. Poles shall be set plumb. Anchor bolts shall be the manufacturer's standard, and not less than necessary to meet the pole wind loading specified herein and other design requirements.

b. Power-Installed Screw Foundations: Power-installed screw foundations having the required strength and mounting-bolt, top plate dimensions may be utilized. Screw foundations shall be of at least 6 mm thick structural steel conforming to ASTM A 36 and hot-dip galvanized in accordance with ASTM A 123. Conduit slots in screw foundation shafts shall be approximately 450 mm below tops of shafts on opposite sides and top plates shall be marked to indicate orientation. Design calculations indicating adequate strength shall be approved before installation of any screw foundation is permitted.

3.13 GROUNDING

A ground ring consisting of the indicated configuration of bare copper conductors and driven ground rods shall be installed around pad-mounted equipment as shown. Equipment frames of metal-enclosed equipment, and other noncurrent-carrying metal parts, such as cable shields, cable sheaths and armor, and metallic conduit shall be grounded. At least 2 connections shall be provided from a transformer to the ground mat. Metallic frames and covers of hand holes and pull boxes shall be grounded by use of a braided, copper ground strap with equivalent ampacity of No. 6 AWG.

3.13.1 Grounding Electrodes

Grounding electrodes shall be installed as shown on the drawings and as follows:

a. Driven rod electrodes - Unless otherwise indicated, ground rods shall be driven into the earth until the tops of the rods are approximately 300 mm below finished grade.

b. Ground ring - A ground ring shall be installed as shown consisting of bare copper conductors installed 300 mm, plus or minus 75 mm, below finished top of soil grade. Ground ring conductors shall be sized as shown.

c. Additional electrodes - When the required ground resistance is not met, additional electrodes shall be provided interconnected with grounding conductors to achieve the specified ground resistance. The additional electrodes will be up to 3 m rods spaced a minimum of 3.7 m apart. In high ground resistance, UL listed chemically charged ground rods may be used. If the resultant resistance exceeds 25 ohms measured not less than 48 hours after rainfall, the Contracting Officer shall be notified immediately.

3.13.2 Grounding and Bonding Connections

Connections above grade shall be made by the fusion-welding process or with bolted solderless connectors, in compliance with UL 467, and those below grade shall be made by a fusion-welding process. Where grounding conductors are connected to aluminum-composition conductors, specially treated or lined copper-to-aluminum connectors suitable for this purpose shall be used.

3.13.3 Grounding and Bonding Conductors

Grounding and bonding conductors include conductors used to bond transformer enclosures and equipment frames to the grounding electrode system. Grounding and bonding conductors shall be sized as shown, and located to provide maximum physical protection. Bends greater than 45 degrees in ground conductors are not permitted. Routing of ground conductors through concrete shall be avoided. When concrete penetration is necessary, nonmetallic conduit shall be cast flush with the points of concrete entrance and exit so as to provide an opening for the ground conductor, and the opening shall be sealed with a suitable compound after installation.

3.13.4 Surge Arrester Grounding

Surge arresters and neutrals shall be bonded directly to the transformer enclosure and then to the grounding electrode system with a bare copper conductor, sized as shown. Lead lengths shall be kept as short as practicable with no kinks or sharp bends.

3.13.5 Manhole, Handhole, or Concrete Pullbox Grounding (When Used)

Ground rods installed in electrical-distribution-system manholes, handholes, or concrete pullboxes shall be connected to cable racks, cable-pulling irons, the cable shielding, metallic sheath, and armor at each cable joint or splice by means of a No. 4 AWG braided tinned copper wire. Connections to metallic cable sheaths shall be by means of tinned terminals soldered to ground wires and to cable sheaths. Care shall be taken in soldering not to damage metallic cable sheaths or shields. Ground rods shall be protected with a double wrapping of pressure-sensitive plastic tape for a distance of 50 mm above and 150 mm below concrete penetrations. Grounding electrode conductors shall be neatly and firmly attached to manhole or handhole walls and the amount of exposed bare wire shall be held to a minimum.

3.13.6 Metal Splice Case Grounding

Metal splice cases for medium-voltage direct-burial cable shall be grounded by connection to a driven ground rod located within 600 mm of each splice box using a grounding electrode conductor having a current-carrying capacity of at least 20 percent of the individual phase conductors in the associated splice box, but not less than No. 6 AWG.

3.14 FIELD TESTING

3.14.1 General

Field testing shall be performed in the presence of the Contracting Officer. The Contractor shall notify the Contracting Officer 15 days prior to conducting tests. The Contractor shall furnish all materials, labor, and equipment necessary to conduct field tests. The Contractor shall perform all tests and inspections recommended by the manufacturer unless specifically waived by the Contracting Officer. The Contractor shall maintain a written record of all tests which includes date, test performed, personnel involved, devices tested, serial number and name of test equipment, and test results. Field test reports shall be signed and dated by the Contractor.

3.14.2 Safety

The Contractor shall provide and use safety devices such as rubber gloves, protective barriers, and danger signs to protect and warn personnel in the test vicinity. The Contractor shall replace any devices or equipment which are damaged due to improper test procedures or handling.

3.14.3 Ground-Resistance Tests

The resistance of the ground ring shall be measured using the fall-of-potential method defined in IEEE Std 81. Ground resistance measurements shall be made before the electrical distribution system is energized and shall be made in normally dry conditions not less than 48 hours after the last rainfall. Resistance measurements of separate grounding electrode systems shall be made before the systems are bonded together below grade. The combined resistance of separate systems may be used to meet the required resistance, but the specified number of electrodes must still be provided.

a. Single rod electrode - 25 ohms.

b. Multiple rod electrodes - 25 ohms.

c. Ground ring - 25 ohms.

3.14.4 Medium-Voltage Cable Test

3.14.4.1 After installation and before the operating test or connection to an existing system, the medium-voltage cable system shall be given a high potential test. Direct-current voltage shall be applied on each phase conductor of the system by connecting conductors as one terminal and connecting grounds or metallic shieldings or sheaths of the cable as the other terminal for each test. Prior to making the test, the cables shall be isolated by opening applicable protective devices and disconnecting equipment. The test shall be conducted with all splices, connectors, and terminations in place. The method, voltage, length of time, and other characteristics of the test for initial installation shall be in accordance with NEMA WC 7 or NEMA WC 8 for the particular type of cable installed, except that 28 kV and 35 kV insulation test voltages shall be in accordance with either AEIC CS5 or AEIC CS6 as applicable, and shall not exceed the recommendations of IEEE Std 404 for cable joints and IEEE Std 48 for cable terminations unless the cable and accessory manufacturers indicate higher voltages are acceptable for testing. Should any cable fail due to a weakness of conductor insulation or due to defects or injuries incidental to the installation or because of improper installation of cable, cable joints, terminations, or other connections, the Contractor shall make necessary repairs or replace cables as directed. Repaired or replaced cables shall be retested.

3.14..4.2 Perform a meggar test on all insulated conductors installed under this contract. The test shall be performed from conductor to ground. The minimum value of acceptance for each conductor shall be 100 megohms. If a conductor fails to meet this requirement, all conductors in that raceway shall be removed and replaced with new and the meggar test shall be reaccomplished to guarantee compliance with the above. A written report of the test data shall be furnished to the Government Project Inspector in five working days after the tests are complete.

3.14.4.3 The Contractor shall comply with all applicable requirements of the National Electrical Code, 1996 ed., and National Electrical Safety Code, 1997 ed.

3.14.5 Low-Voltage Cable Test

Low-voltage cable, complete with splices, shall be tested for insulation resistance after the cables are installed, in their final configuration, ready for connection to the equipment, and prior to energization. The test voltage shall be 500 volts dc, applied for one minute between each conductor and ground and between all possible combinations conductors in the same trench, duct, or cable, with all other conductors in the same trench, duct, or conduit. The minimum value of insulation shall be:

$$R \text{ in megohms} = \frac{(\text{rated voltage in kV} + 1) \times 304.8}{(\text{length of cable in meters})}$$

Each cable failing this test shall be repaired or replaced. The repaired cable shall be retested until failures have been eliminated.

3.14.6 Liquid-Filled Transformer Tests

The following field tests shall be performed on all liquid-filled transformers. Pass-fail criteria shall be in accordance with transformer manufacturer's specifications.

a. Insulation resistance test phase-to-ground.

b. Turns ratio test.

c. Correct phase sequence.

d. Correct operation of tap changer.

3.14.7 Circuit Breaker Tests

The following field tests shall be performed on circuit breakers. Pass-fail criteria shall be in accordance with the circuit breaker manufacturer's specifications.

a. Insulation resistance test phase-to-phase.

b. Insulation resistance test phase-to-ground.

c. Closed breaker contact resistance test.

d. Power factor test.

e. High-potential test.

f. Manual and electrical operation of the breaker.

3.14.8 Protective Relays

Protective relays shall be visually and mechanically inspected, adjusted, tested, and calibrated in accordance with the manufacturer's published instructions. Tests shall include pick-up, timing, contact action, restraint, and other aspects necessary to ensure proper calibration and operation. Relay settings shall be implemented in accordance with the coordination study. Relay contacts shall be manually or

electrically operated to verify that the proper breakers and alarms initiate. Relaying current transformers shall be field tested in accordance with IEEE C57.13.

3.14.9 Pre-Energization Services

Calibration, testing, adjustment, and placing into service of the installation shall be accomplished by a manufacturer's product field service engineer or independent testing company with a minimum of 2 years of current product experience. The following services shall be performed on the equipment listed below. These services shall be performed subsequent to testing but prior to the initial energization. The equipment shall be inspected to ensure that installation is in compliance with the recommendations of the manufacturer and as shown on the detail drawings. Terminations of conductors at major equipment shall be inspected to ensure the adequacy of connections. Bare and insulated conductors between such terminations shall be inspected to detect possible damage during installation. If factory tests were not performed on completed assemblies, tests shall be performed after the installation of completed assemblies. Components shall be inspected for damage caused during installation or shipment to ensure packaging materials have been removed. Components capable of being both manually and electrically operated shall be operated manually prior to the first electrical operation. Components capable of being calibrated, adjusted, and tested shall be calibrated, adjusted, and tested in accordance with the instructions of the equipment manufacturer. Items for which such services shall be provided, but are not limited to, are the following:

a. Pad-mounted transformers

b. Panelboards

c. Switchboards

d. Switches

3.14.10 Operating Tests

After the installation is completed, and at such times as the Contracting Officer may direct, the Contractor shall conduct operating tests for approval. The equipment shall be demonstrated to operate in accordance with the requirements herein. An operating test report shall be submitted in accordance with paragraph SUBMITTALS.

3.15 MANUFACTURER'S FIELD SERVICE

3.15.1 Onsite Training

The Contractor shall conduct a training course for the operating staff as designated by the Contracting Officer. The training period shall consist of a total of 4 hours of normal working time and shall start after the system is functionally completed but prior to final acceptance tests. The course instruction shall cover pertinent points involved in operating, starting, stopping, and servicing the equipment, as well as all major elements of the operation and maintenance manuals. Additionally, the course instructions shall demonstrate all routine maintenance operations. A VHS format video tape of the entire training session shall be submitted.

3.15.2 Installation Engineer

After delivery of the equipment, the Contractor shall furnish one or more field engineers, regularly employed by the equipment manufacturer to supervise the installation of the equipment, assist in the performance of the onsite tests, initial operation, and instruct personnel as to the operational and maintenance features of the equipment.

3.16 ACCEPTANCE

Final acceptance of the facility will not be given until the Contractor has successfully completed all tests and after all defects in installation, material or operation have been corrected.

END OF SECTION

SECTION 16415

ELECTRICAL WORK, INTERIOR

PART 1 GENERAL

1.1 REFERENCES

The publications listed below form a part of this specification to the extent referenced. The publications are referred to in the text by basic designation only.

AMERICAN NATIONAL STANDARDS INSTITUTE (ANSI)

ANSI C12.1	(1988) Code for Electricity Metering
ANSI C12.4	(1984; R 1996) Mechanical Demand Registers
ANSI C12.10	(1987) Electromechanical Watthour Meters
ANSI C37.16	(1988; C37.16a; R. 1995) Low-Voltage Power Circuit Breakers and AC Power Circuit Protectors - Preferred Ratings, Related Requirements, and Application Recommendations
ANSI C39.1	(1981; R 1992) Electrical Analog Indicating Instruments
ANSI C57.12.10	(1987) 230 kV and Below 833/958 through 8333/10 to 417 kVA, Single-Phase, and 750/862 through 60 000/80 000/100 000 kVA, Three-Phase without 60 000/80 000/100 000 kVA with Load Tap Changing - Safety Requirements
ANSI C57.12.50	(1981; R 1989) Ventilated Dry-Type Distribution Transformers, 1 to 500 kVA, Single-Phase, and 15 to 500 kVA, Three-Phase, with High-Voltage 601 to 34 500 Volts, Low-Voltage 120 to 600 Volts
ANSI C80.5	(1995) Rigid Aluminum Conduit

ANSI C82.1	(1985; C82.1a; C82.1b; C82.1c; C82.1d; C82.1e; R 1992) Ballasts for Fluorescent Lamps Specifications
ANSI C82.4	(1992) Ballasts for High-Intensity-Discharge and Low-Pressure Sodium Lamps (Multiple-Supply Type)

AMERICAN SOCIETY FOR TESTING AND MATERIALS (ASTM)

ASTM D 709	(1992, R. 1997) Laminated Thermosetting Materials

CODE OF FEDERAL REGULATIONS (CFR)

47 CFR 18	Rules and Regulations: Industrial, Scientific, and Medical Equipment

FEDERAL SPECIFICATIONS (FS)

FS L-C-530	(Rev C) Coating, Pipe, Thermoplastic Resin

INSTITUTE OF ELECTRICAL AND ELECTRONICS ENGINEERS (IEEE)

IEEE C2	(1997) National Electrical Safety Code
IEEE C37.20.1	(1993) Metal-Enclosed Low-Voltage Power Circuit-Breaker Switchgear
IEEE C57.12.01	(1989) Dry-Type Distribution and Power Transformers Including Those With Solid Cast and/or Resin Encapsulated Windings
IEEE C57.12.80	(1978; R 1992) Terminology for Power and Distribution Transformers
IEEE C57.12.91	(1979) Test Code for Dry-Type Distribution and Power Transformers
IEEE C57.13	(1993) Instrument Transformers

IEEE C57.94	(1982; R 1987) Installation, Application, Operation and Maintenance of Dry-Type General Purpose Distribution and Power Transformers
IEEE C57.98	(1993) Guide for Transformer Impulse Tests
IEEE C57.105	(1978; R 1992) Transformer Connections in Three-Phase Distribution Systems
IEEE C62.41	(1991) Surge Voltages in Low-Voltage AC Power Circuits
IEEE Std 81	(1983) Guide for Measuring Earth Resistivity, Ground Impedance, and Earth Surface Potentials of a Ground System (Part 1)

NATIONAL ELECTRICAL MANUFACTURERS ASSOCIATION (NEMA)

NEMA 250	(1991) Enclosures for Electrical Equipment (1000 Volts Maximum)
NEMA AB 1	(1993) Molded Case Circuit Breakers and Molded Case Switches
NEMA FU 1	(1986) Low Voltage Cartridge Fuses
NEMA ICS 1	(1993) Industrial Controls and Systems
NEMA ICS 2	(1993) Industrial Control Devices, Controllers and Assemblies
NEMA ICS 3	(1993) Industrial Systems
NEMA ICS 6	(1993) Enclosures for Industrial Control and Systems
NEMA LE 4	(1987) Recessed Luminaires, Ceiling Compatibility
NEMA MG 1	(1993; Rev 1-1993; Rev 2-1995) Motors and Generators
NEMA MG 10	(1994) Energy Management Guide for Selection and Use of Polyphase Motors

NEMA OS 1	(1989) Sheet-Steel Outlet Boxes, Device Boxes, Covers, and Box Supports
NEMA OS 2	(1986; Errata Aug 1986; R 1991) Nonmetallic Outlet Boxes, Device Boxes, Covers and Box Supports
NEMA PB 1	(1990) Panelboards
NEMA PB 2	(1995) Deadfront Distribution Switchboards
NEMA RN 1	(1989) Polyvinyl-Chloride (PVC) Externally Coated Galvanized Rigid Steel Conduit and Intermediate Metal Conduit
NEMA ST 20	(1992) Dry-Type Transformers for General Applications
NEMA TC 2	(1990) Electrical Polyvinyl Chloride (PVC) Tubing (EPT) and Conduit (EPC-40 and EPC-80)
NEMA TC 13	(1993) Electrical Nonmetallic Tubing (ENT)
NEMA WD 1	(1983; R 1989) General Requirements for Wiring Devices
NEMA WD 6	(1988) Wiring Devices Dimensional Requirements

NATIONAL FIRE PROTECTION ASSOCIATION (NFPA)

NFPA 70	(1999) National Electrical Code
NFPA 101	(1997) Safety to Life from Fire in Buildings and Structures

UNDERWRITERS LABORATORIES (UL)

UL 1	(1993; Rev thru Jan 1995) Flexible Metal Conduit
UL 5	(1996) Surface Metal Raceways and Fittings

UL 6	(1997) Rigid Metal Conduit
UL 20	(1995; Rev thru Jan 1998) General-Use Snap Switches
UL 44	(1997; Rev thru Aug 1997) Rubber-Insulated Wires and Cables
UL 50	(1995; Rev thru Oct 1997) Enclosures for Electrical Equipment
UL 67	(1993; Rev thru Nov 1995) Panelboards
UL 83	(1996; Rev thru Oct 1997) Thermoplastic-Insulated Wires and Cables
UL 98	(1994; R Oct 1995) Enclosed and Dead-Front Switches
UL 198C	(1996; Rev thru Jun 1998) High-Interrupting-Capacity Fuses, Current-Limiting Types
UL 198E	(1988; Rev Jul 1988) Class R Fuses
UL 198L	(1995; Rev May 1995) D-C Fuses for Industrial Use
UL 467	(1993; Rev thru Aug 1996) Grounding and Bonding Equipment
UL 486A	(1997) Wire Connectors and Soldering Lugs for Use with Copper Conductors
UL 486B	(1997; Rev thru Jun 1997) Wire Connectors for Use with Aluminum Conductors
UL 486C	(1997) Splicing Wire Connectors
UL 489	(1996; Rev thru Nov 1997) Molded-Case Circuit Breakers and Circuit-Breaker Enclosures
UL 498	(1996; Rev thru Nov 1997) Attachment Plugs and Receptacles
UL 506	(1994; Rev Oct 1997) Specialty Transformers

UL 508	(1993; Rev Oct 1997) Industrial Control Equipment
UL 510	(1994; Rev thru Nov 1997) Insulating Tape
UL 512	(1993; R Dec 1995) Fuseholders
UL 514A	(1996) Metallic Outlet Boxes
UL 514B	(1997) Fittings for Conduit and Outlet Boxes
UL 514C	(1996) Nonmetallic Outlet Boxes, Flush-Device Boxes, and Covers
UL 542	(1994; Rev thru May 1997) Lampholders, Starters, and Starter Holders for Fluorescent Lamps
UL 651	(1995; Rev thru Apr 1997) Schedule 40 and 80 Rigid PVC Conduit
UL 651A	(1995; Rev thru Sep 1996) Type EB and A Rigid PVC Conduit and HDPE Conduit
UL 797	(1993; Rev May 1997) Electrical Metallic Tubing
UL 817	(1994; Rev thru Aug 1997) Cord Sets and Power-Supply Cords
UL 845	(1995; Rev Feb 1996) Motor Control Centers
UL 869A	(1993; Rev thru Apr 1996) Reference Standard for Service Equipment
UL 891	(1994; Rev thru Jan 1995) Dead-Front Switchboards
UL 924	(1995; Rev thru Oct 1997) Emergency Lighting and Power Equipment
UL 935	(1995; Rev Apr 1997) Fluorescent-Lamp Ballasts
UL 943	(1993; Rev thru Mar 1997) Ground-Fault Circuit Interrupters

UL 1004	(1994; Rev thru Feb 1997) Electric Motors
UL 1242	(1996; Rev thru Apr 1997) Intermediate Metal Conduit
UL 1561	(1994; Rev Jul 1995) Dry-Type General Purpose Power Transformers
UL 1570	(1995; Rev thru Jan 1997) Fluorescent Lighting Fixtures
UL 1571	(1995; Rev thru Jun 1997) Incandescent Lighting Fixtures
UL 1572	(1995; Rev thru Jun 1997) High Intensity Discharge Lighting Fixtures
UL 1660	(1994; Jan 1996) Liquid-Tight Flexible Nonmetallic Conduit

1.2 GENERAL

1.2.1 Rules

The installation shall conform to the requirements of NFPA 70 and NFPA 101, unless more stringent requirements are indicated herein or shown.

1.2.2 Coordination

The drawings indicate the extent and the general location and arrangement of equipment, conduit, and wiring. The Contractor shall become familiar with all details of the work and verify all dimensions in the field so that the outlets and equipment shall be properly located and readily accessible. Lighting fixtures, outlets, and other equipment and materials shall be located to avoid interference with mechanical or structural features; otherwise, lighting fixtures shall be symmetrically located according to the room arrangement when uniform illumination is required, or asymmetrically located to suit conditions fixed by design and shown. Raceways, junction and outlet boxes, and lighting fixtures shall not be supported from sheet metal roof decks. If any conflicts occur necessitating departures from the drawings, details of and reasons for departures shall be submitted and approved prior to implementing any change. The Electrical Contractor shall coordinate the electrical work with HVAC and electrical drawings and provide all power related wiring even if they are not shown on electrical drawings.

1.2.3 Special Environments

1.2.3.1 Weatherproof Locations

Wiring, fixtures and equipment in designated locations shall conform to NFPA 70 requirements for installation in damp or wet locations.

1.2.4 Standard Products

Material and equipment shall be a standard product of a manufacturer regularly engaged in the manufacture of the product and shall essentially duplicate items that have been in satisfactory use for at least 2 years prior to bid opening.

1.2.5 Identification Nameplates

Major items of electrical equipment and major components shall be permanently marked with an identification name to identify the equipment by type or function and specific unit number as indicated. Designation of motors shall coincide with their designation in the motor control center or panel. Unless otherwise specified, all identification nameplates shall be made of laminated plastic in accordance with ASTM D 709 with black outer layers and a white core. Edges shall be chamfered. Plates shall be fastened with black-finished round-head drive screws, except motors, or approved nonadhesive metal fasteners. When the nameplate is to be installed on an irregular-shaped object, the Contractor shall devise an approved support suitable for the application and ensure the proper installation of the supports and nameplates. In all instances, the nameplate shall be installed in a conspicuous location. At the option of the Contractor, the equipment manufacturer's standard embossed nameplate material with black paint-filled letters may be furnished in lieu of laminated plastic. The front of each panelboard, motor control center, switchgear, and switchboard shall have a nameplate to indicate the phase letter, corresponding color and arrangement of the phase conductors. The following equipment, as a minimum, shall be provided with identification nameplates:

Minimum 6.4 mm High Letters	Minimum 3.2 mm High Letters
Panelboards	Control Power Transformers
Starters	Control Devices
Safety Switches	Instrument Transformers
Motor Control Centers	
Transformers	
Equipment Enclosures	
Switchgear	
Switchboards	
Motors	

Minimum 1/4 inch High Letters	Minimum 1/8 inch High Letters
Panelboards	Control Power Transformers
Starters	Control Devices
Safety Switches	Instrument Transformers
Motor Control Centers	

Transformers
Equipment Enclosures
Switchgear
Switchboards
Motors

Each panel, section, or unit in motor control centers, switchgear or similar assemblies shall be provided with a nameplate in addition to nameplates listed above, which shall be provided for individual compartments in the respective assembly, including nameplates which identify "future," "spare," and "dedicated" or "equipped spaces."

1.2.6 As Built Drawings

Following the project completion or turnover, within 30 days the Contractor shall furnish two sets of as built drawings to the Contracting Officer.

1.3 SUBMITTALS

Government approval is required for submittals with a "GA" designation; submittals having an "FIO" designation are for information only. The following shall be submitted in accordance with Section 01330 SUBMITTAL PROCEDURES:

SD-04 Drawings

Electrical Work; FIO (Unless Otherwise Indicated).

Detail drawings for all materials and equipment specified. Detail drawings shall consist of a complete list of equipment and materials, including manufacturer's descriptive and technical data; catalog cuts; and any special installation instructions that may be required. Drawings shall show applicable schematic diagrams; and equipment layout and anchorage.

Electrical Work (Coordinated Power System Protection); GA.

Power system coordination study, short-circuit analysis or study, fault-impedance diagrams, and load flow analysis or study shall be included and shall be in accordance with paragraph COORDINATED POWER SYSTEM PROTECTION.

Electrical Work (Light Fixtures); GA.

Catalog cuts (including manufacturer's descriptive, technical and photometric data) for all light fixtures specified. Data shall be sufficient to verify the fixtures are in full compliance with the drawings and specifications. Sample fixtures shall be provided and shipped at no additional cost to the Government for each fixture type identified by the Contracting Officer's representative. The shipping address shall be provided by the Contracting Officer’s representative.

Electrical Work (Occupancy Sensors); GA.

Manufacturer shall substantiate conformance to this specification by supplying the necessary documents, performance data and wiring diagrams. Any deviations to this specification must be clearly stated by letter and submitted. Submit a lighting plan clearly marked by manufacturer showing proper product, location and orientation of each sensor. Submit any interconnection diagrams per major subsystem showing proper wiring. Submit standard catalog literature which includes performance specifications indicating compliance to the specification.

SD-09 Reports

Materials and Equipment; FIO.

The label or listing of the Underwriters Laboratories, Inc., shall be accepted as evidence that the materials or equipment conform to the applicable standards of that agency. In lieu of this label or listing, a statement from a nationally recognized, adequately equipped testing agency indicating that the items have been tested in accordance with required procedures and that the materials and equipment comply with all contract requirements will be accepted. However, materials and equipment installed in hazardous locations must bear the UL label unless the data submitted from other testing agency is specifically approved in writing by the Contracting Officer. Materials and equipment shall be approved based on the manufacturer's published data.

For other than equipment and materials specified to conform to UL publications, a manufacturer's statement indicating complete compliance with the applicable Federal Specification, or standard of the American Society for Testing and Materials, National Electrical Manufacturers Association, or other commercial standard, is acceptable.

1.4 WORKMANSHIP

Materials and equipment shall be installed in accordance with recommendations of the manufacturer and as shown.

PART 2 PRODUCTS

2.1 MATERIALS AND EQUIPMENT

Materials and equipment shall conform to the respective publications and other requirements specified below. Materials and equipment not listed below shall be as specified elsewhere in this section.

2.1.1 Omitted

2.1.2 Cables and Wires

Conductors in cables shall be annealed copper. Cables shall be single-conductor type, unless otherwise indicated. Cables and wires shall conform to UL 44 for rubber-insulated type and UL 83 for the thermoplastic-insulated type. The following types shall be provided where indicated.

2.1.2.1 Metallic Armored Cable

Type ACHH or ACT.

2.1.2.3 Service Entrance Cable

Type Se or USE.

2.1.2.4 Grounding Cables

Grounding cables shall be bare or shall have green low-voltage insulation.

2.1.2.5 Cord Sets and Power-Supply Cords

UL 817.

2.1.3 Circuit Breakers

Circuit breakers shall have voltage, current and interrupting ratings as indicated. Fully rated circuit breakers shall be provided to obtain the specified interrupting rating.

2.1.3.1 Molded-Case and Insulated-Case Circuit Breakers

NEMA AB 1 and UL 489 for circuit breakers.

a. Molded-Case Circuit Breakers: Single-pole breakers shall be full module size; two poles shall not be installed in a single module. Multipole breakers shall be of the common-trip type having a single operating handle, but for sizes of 100 amperes or less may consist of single pole breakers permanently factory assembled into a multipole unit having an internal, mechanical, nontamperable common trip mechanism and external handle ties. Breakers coordinated with current limiting fuses shall have a combined interrupting capacity of 100,000 symmetrical amperes. All poles of associated breakers shall open if any fuse blows.

b. Insulated-Case, Systems-Type Circuit Breakers: Breakers shall have continuous, short time withstand, and interrupting current ratings and frame sizes as indicated. Breakers shall have adjustable long time, short time, ground fault and instantaneous solid state trip elements as indicated. Breakers shall be stored energy, manually operated type.

2.1.3.2 Low-Voltage-Power

IEEE C37.13 and ANSI C37.16. Breakers shall have continuous, short time withstand, and interrupting current ratings and frame sizes as indicated. Breakers shall have adjustable short time, ground fault and instantaneous solid state trip elements as indicated. Breakers shall be stored energy, manually operated, except solenoid operated breakers are permitted in 600 amperes frame or smaller electrically operated breakers.

2.1.3.3 Ground Fault Circuit Interrupters

UL 943. Breakers equipped with ground fault interrupters shall have ground fault class, interrupting capacity, and voltage and current ratings as indicated.

2.1.4 Conduit and Tubing

2.1.4.1 Electrical, Zinc-Coated Steel Metallic Tubing (EMT)

UL 797.

2.1.4.2 Electrical Nonmetallic Tubing (ENT)

NEMA TC 13.

2.1.4.3 Electrical Plastic Tubing and Conduit

NEMA TC 2.

2.1.4.4 Flexible Conduit, Steel and Plastic

General purpose type, UL 1; liquid tight, UL 360, and UL 1660.

2.1.4.5 Intermediate Metal Conduit

UL 1242.

2.1.4.6 PVC Coated Rigid Steel Conduit

NEMA RN 1.

2.1.4.7 Rigid Aluminum Conduit

ANSI C80.5 and UL 6.

2.1.4.8 Rigid Metal Conduit

UL 6.

2.1.4.9 Rigid Plastic

NEMA TC 2, UL 651 and UL 651A.

2.1.4.10 Surface Metal Electrical Raceways and Fittings

UL 5.

2.1.5 Conduit and Device Boxes and Fittings

2.1.5.1 Boxes, Metallic Outlet

NEMA OS 1 and UL 514A.

2.1.5.2 Boxes, Nonmetallic, Outlet and Flush-Device Boxes and Covers

NEMA OS 2 and UL 514C.

2.1.5.3 Omitted

2.1.5.4 Boxes, Switch (Enclosed), Surface-Mounted

UL 98.

2.1.5.5 Fittings for Conduit and Outlet Boxes

UL 514B.

2.1.5.6 Omitted

2.1.5.7 Fittings, PVC, for Use with Rigid PVC Conduit and Tubing

UL 514B.

2.1.6 Conduit Coatings Plastic Resin System

FS L-C-530 or NEMA RN 1, Type A-40.

2.1.7 Connectors, Wire Pressure

2.1.7.1 Copper Conductors

UL 486A.

2.1.8 Electrical Grounding and Bonding Equipment

UL 467.

2.1.8.1 Ground Rods

Ground rods shall be of copper clad steel conforming to UL 467 not less than 19.1 mm in diameter by 3.1 meter in length of the sectional type driven full length into the earth.

2.1.9 Enclosures

NEMA ICS 6 or NEMA 250, unless otherwise specified.

2.1.9.1 Cabinets and Boxes, Volume Greater Than 0.00164 Cubic Meters (100 Cubic Inches)

UL 50, hot dip, zinc-coated, if sheet steel.

2.1.9.2 Circuit Breaker

UL 489.

2.1.10 Fixtures, Lighting and Fixture Accessories/Components

Fixtures, accessories and components, including ballasts, lampholders, lamps, starters and starter holders, shall conform to industry standards specified below.

2.1.10.1 Fixture, Auxiliary or Emergency

UL 924.

2.1.10.2 Incandescent Fixture

NEMA LE 4 for ceiling compatibility of recessed fixtures and UL 1571.

2.1.10.3 Fluorescent

a. Fixture: NEMA LE 4 for ceiling compatibility of recessed fixtures and UL 1570. Fixtures shall be plainly marked for proper lamp and ballast type to identify lamp diameter, wattage, color (degrees Kelvin and CRI) and start type. Marking shall be readily visible to service personnel, but not visible from normal viewing angles.

b. Ballasts: All ballast shall be the electronic type unless otherwise indicated.

(1) Electronic Ballast. Electronic ballasts shall consist of a rectifier, high frequency inverter, and power control and regulation circuitry. The ballasts shall be UL listed, Class P, with a Class A sound rating and shall contain no PCBs. Ballasts shall meet 47 CFR 18 for electromagnetic interference and shall not interfere with the operation of other electrical equipment. Design shall withstand line transients per IEEE C62.41, Category A. Unless otherwise indicated, the minimum number of ballasts shall be used to serve each individual fixture, using one, two, three or four lamp ballasts. A single ballast may be used to serve multiple fixtures if they are continuous mounted, factory manufactured for that installation with an integral wireway and are identically controlled.

(a) Constant light output at plus or minus 5 percent of line voltage.
(b) Voltage input regulation shall be plus or minus 10 percent.
(c) Lamp current crest factor shall be no more than 1.7.

(d) Ballast factor shall be not less than 87.5 percent nor more than 100 percent, unless otherwise indicated.

(e) Flicker shall be no more than 15 percent with any lamp suitable for the ballast.

(f) Ballast case temperature shall not exceed 25-degree Celsius rise above 40 degree Celsius ambient, when tested in accordance with UL 935.

(g) Input current third harmonic shall not exceed 20 percent total harmonic distortion or 10 percent of the third triplens.

(h) Power factor shall not be less than 0.98 for T8 lamps and 0.95 for compact fluorescent lamps.

(i) Ballasts shall operate at a frequency of 23 Khz or more.

(j) Omitted.

(k) Warranty. Five-year full warranty including a 10-dollar labor allowance.

(l) Ballast Efficacy Factor (BEF) shall be in accordance with the following table. Ballasts and lamps shall be matching rapid start or instant start as indicated on the following table. If 32W-F32-T8 lamps and ballasts are used, they must be either all rapid start or all instant start.

ELECTRONIC FLUORESCENT BALLAST EFFICACY FACTORS

LAMP TYPE & LAMP	TYPE OF STARTER INPUT VOLTAGE	NOMINAL OPERATIONAL LAMPS	NUMBER OF FACTOR	MIN. BALLAST EFFICACY
32W F32 T8	rapid or instant start	120 or 277 V	1	2.4
			2	1.4
			3	1.0
			4	0.8
13W 4 Pin	Quad rapid start	120 V	1	5.60
			2	2.90
18W 4 Pin	Quad rapid start	120 V	1	4.20
			2	2.35
26W 4 Pin	Quad rapid start	120 V	1	2.90
			2	1.55

*For ballasts not specifically designed for use with dimming controls

The BEF is calculated using the formula:

BEF = Ballast Factor (in percent)/Power Input

Where Power Input = Total Wattage of Combined Lamps and Ballasts.

(2) Dimming Ballast. The ballast shall be the high frequency electronic type UL listed for 120 or 277 volts at 60 hertz to control the indicated lamp types. The ballast shall allow for smooth and continuous dimming down to 5 percent lumen output. The ballast shall operate in the inaudible range of 42 kHz to 80 kHz and shall have an FCC Part 18 Class A rating. The ballast shall adhere to ANSI C62.11 (IEEE 587 Class B) for transient protection up to 2.5 kV. The power factor shall be no less than 99 percent at full intensity and 80 percent at minimum intensity. The total harmonic distortion (THD) shall be no more than 10 percent at full intensity and 20 percent at minimum intensity. The lamp crest factor shall be less than 1.7. The ballast shall include short and open circuit protection and Class P thermal protection. The ballast shall default to full ON (full intensity) with loss of the control signal. The ballast shall provide fully regulated constant lumen output at plus or minus 10 percent variation in line voltage. There shall be no perceivable difference in light level between single and multiple lamp ballasts for the same type lamp. Like fixtures shall be wired alike to ensure conformity between light sources. Lamps shall be aged a minimum of 100 hours at full intensity before dimming. The ballasts shall not compromise the manufacturer's rated life for each lamp type. The ballasts shall be warranted for 5 years, material and labor.

c. Lampholders, Starters, and Starter Holders: UL 542.

2.1.10.4 High-Intensity-Discharge

a. Fixture: NEMA LE 4 for ceiling compatibility of recessed fixtures and UL 1572.

b. Ballasts: ANSI C82.4 for multiple supply types and UL 1029.

2.1.11 Fuses and Fuseholders

2.1.17.1 Fuses, Low Voltage Cartridge Type

NEMA FU 1.

2.1.11.2 Fuses, High-Interrupting-Capacity, Current-Limiting Type

UL 198C.

2.1.11.3 Fuses, Class R

UL 198E.

2.1.11.4 Omitted

2.1.11.5 Fuses, D-C for Industrial Use

UL 198L.

2.1.11.6 Fuseholders

UL 512.

2.1.12 Instruments, Electrical Indicating

ANSI C39.1.

2.1.13 Motors, ac, Fractional and Integral

Motors, ac, fractional and integral kilowatt (horsepower), 373.0 kW (500 hp) and smaller shall conform to NEMA MG 1 and UL 1004 for motors; NEMA MG 10 for energy management selection of polyphase motors.

2.1.13.1 Rating

The kilowatt (horsepower) rating of motors should be limited to no more than 125 percent of the maximum load being served unless a NEMA standard size does not fall within this range. In this case, the next larger NEMA standard motor size should be used.

2.1.13.2 Motor Efficiencies

All permanently wired polyphase motors of 746 W (1 hp) or more shall meet the minimum full-load efficiencies as indicated in the following table, and as specified in this specification. Motors of 746 W (1 hp) or more with open, dripproof or totally enclosed fan cooled enclosures shall be high efficiency type, unless otherwise indicated. Motors provided as an integral part of motor driven equipment are excluded from this requirement if a minimum seasonal or overall efficiency requirement is indicated for that equipment by the provisions of another section.

Minimum Motor Efficiencies

Kw	Std. Efficiency	High Efficiency
0.746 (1 hp)	77.0	85.5
1.12 (1.5 hp)	78.5	85.5
1.49 (2 hp)	78.5	85.5
2.24 (3 hp)	78.5	88.5
3.73 (5 hp)	82.5	88.5
5.60 (7.5 hp)	84.0	90.0
7.46 (10 hp)	85.5	90.0
11.2 (15 hp)	85.5	91.0
14.9 (20 hp)	87.5	92.0
18.7 (25 hp)	88.5	92.0
22.4 (30 hp)	88.5	92.0

2.1.14 Motor Controls and Motor Control Centers

NEMA ICS 1, NEMA ICS 2, NEMA ICS 3 and NEMA ICS 6, and UL 508 and UL 845.

2.1.15 Panelboards

Dead-front construction, NEMA PB 1 and UL 67.

2.1.16 Receptacles

2.1.16.1 Omitted

2.1.16.2 General Grade

NEMA WD 1.

2.1.16.3 Standard Grade

UL 498.

2.1.16.4 Ground Fault Interrupters

UL 943, Class A or B.

2.1.17 Service Equipment

UL 869A.

2.1.18 Splice, Conductor

UL 486C.

2.1.19 Switchboard, Dead Front Distribution

NEMA PB 2 and UL 891.

2.1.20 Switchgear Assemblies, Power

IEEE C37.20.1.

2.1.21 Snap Switches

UL 20.

2.1.22 Tapes

2.1.22.1 Plastic Tape

UL 510.

2.1.22.2 Rubber Tape

UL 510.

2.1.23 Transformers

2.1.23.1 Conventional Dry-Type

IEEE C57.12.01, ANSI C57.12.10, IEEE C57.12.80, IEEE C57.12.91, IEEE C57.94, IEEE C57.98, IEEE C57.105 and UL 1561 in addition to the specific standards referenced below.

a. Distribution: Ventilated, 1 to 500 kVA, single-phase, and 15 to 500 kVA, three-phase with high-voltage 601 to 34500 volts, low-voltage 120-600 volts: ANSI C57.12.50.

b. Specialty or General Applications: NEMA ST 20 and UL 506 unless otherwise shown or specified.

c. Instrument: ANSI C12.11 and IEEE C57.13 with current ratio or voltage ratings shown or specified.

2.1.24 Watthour Meters

Watthour meters shall conform to ANSI C12.1 and ANSI C12.10, except numbered terminal wiring sequence and case size may be the manufacturer's standard. Watthour meters shall have a 15-minute, cumulative form, demand register meeting ANSI C12.4 and provided with not less than two and one-half stators. Watthour demand meters shall have factory-installed electronic pulse initiators meeting the requirements of ANSI C12.1. Pulse initiators shall be solid-state devices incorporating light-emitting diodes, phototransistors, and power transistors, except that mercury-wetted output contacts are acceptable. Initiators shall be totally contained within watthour demand meter enclosures, shall be capable of operating up to speeds of 500 pulses per minute with no false pulses, and shall require no field adjustments. Initiators shall be calibrated for a pulse rate output of one pulse per 1/4 disc revolution of the associated meter and shall be compatible with the indicated equipment.

2.1.25 Wiring Devices

NEMA WD 1 for general-purpose wiring devices, and NEMA WD 6 for dimensional requirements of wiring devices.

2.2.26 Heating Tape System

The heating tape is used to protect chilled water supply and chilled water return pipes from freezing.

2.2.26.1 General

The heating tape system shall consist of the heating tape, contactor, thermostat, and all associated wiring, connectors, and terminators. The system shall be manufacturer's standard product using main components as listed in this specification.

2.2.26.2 Heating Tape

The tape shall consist of two 16 AWG tinned copper wires embedded in parallel in a self regulating polymer core with variable power output. The wires shall be covered by a cross linked dielectric jacket and protected by a tinned copper braid and a 70 mil thick modified polyefin outer jacket. The tape shall be rated for 5 watts per foot.

2.2.26.3 Contactor

The contactor rating and number of poles shall be as indicated. The contactor shall have a NEMA 1 enclosure.

PART 3 EXECUTION

3.1 GROUNDING

Grounding shall be in conformance with NFPA 70, the contract drawings, and the following specifications.

3.1.1 Ground Rods

The resistance to ground shall be measured using the fall-of-potential method described in IEEE Std 81. The maximum resistance of a driven ground shall not exceed 25 ohms under normally dry conditions. If this resistance cannot be obtained with a single rod, two additional rods not less than 1.8 meters on centers, or if sectional type rods are used, two additional sections may be coupled and driven with the first rod. In high-ground-resistance, UL listed chemically charged ground rods may be used. If the resultant resistance exceeds 25 ohms measured not less than 48 hours after rainfall, the Contracting Officer shall be notified immediately. Connections below grade shall be fusion welded. Connections above grade shall be fusion welded or shall use UL 467 approved connectors.

3.1.2 Omitted

3.1.3 Grounding Conductors

A green ground wire shall be furnished regardless of the type of conduit. All equipment grounding conductors, including metallic raceway systems used as such, shall be bonded or joined together in each wiring box or equipment enclosure. Metallic raceways and grounding conductors shall be checked to assure that they are wired or bonded into a common junction. Metallic boxes and enclosures, if used, shall also be bonded to these grounding conductors by an approved means per NFPA 70. When boxes for receptacles, switches, or other utilization devices are installed, any designated grounding terminal on these devices shall also be bonded to the equipment grounding conductor junction with a short jumper.

3.2 WIRING METHODS

3.2.1 General Requirements

Unless otherwise indicated, wiring shall consist of insulated conductors installed in rigid aluminum or rigid zinc-coated steel conduit, electrical metallic tubing, or intermediate metal conduit.

3.2.2 Conduit and Tubing Systems

Conduit and tubing systems shall be installed as indicated. Conduit sizes shown are based on use of copper conductors with insulation types as described in paragraph WIRING METHODS. Minimum size of raceways shall be 15 mm. Only metal conduits will be permitted when conduits are required for shielding or other special purposes indicated, or when required by conformance to NFPA 70. Nonmetallic conduit and tubing may be used in damp, wet or corrosive locations when permitted by NFPA 70 and the conduit or tubing system is provided with appropriate boxes, covers, clamps, screws or other appropriate type of fittings. Electrical metallic tubing may be installed only within buildings. Electrical metallic tubing may be installed in concrete and grout in dry locations. Electrical metallic tubing installed in concrete or grout shall be provided with concrete tight fittings. EMT shall not be installed in damp or wet locations, or the air space of exterior masonry cavity walls. Bushings, manufactured fittings or boxes providing equivalent means of protection shall be installed on the ends of all conduits and shall be of the insulating type, where required by NFPA 70. Only UL listed adapters shall be used to connect EMT to rigid metal conduit, cast boxes, and conduit bodies. Aluminum conduit may be used only where installed exposed in dry locations. Nonaluminum sleeves shall be used where aluminum conduit passes through concrete floors and firewalls. Penetrations of above grade floor slabs, time-rated partitions and fire walls shall be firestopped in accordance with Section 07270 FIRESTOPPING. Except as otherwise specified, IMC may be used as an option for rigid steel conduit in areas as permitted by NFPA 70. Raceways shall not be installed under the firepits of boilers and furnaces and shall be kept 150 mm away from parallel runs of flues, steam pipes and hot-water pipes. Raceways shall be concealed within finished walls, ceilings, and floors unless otherwise shown. Raceways crossing structural expansion joints shall be provided with suitable expansion fittings or other suitable means to compensate for the building expansion and contraction and to provide for continuity of grounding.

3.2.2.1 Below Slab-on-Grade or in the Ground

Electrical wiring below slab-on-grade shall be protected by a conduit system. Conduit passing vertically through slabs-on-grade shall be rigid steel or IMC. Rigid steel or IMC conduits installed below slab-on-grade or in the earth shall be field wrapped with 0.254 mm thick pipe-wrapping plastic tape applied with a 50 percent overlay, or shall have a factory-applied polyvinyl chloride, plastic resin, or epoxy coating system.

3.2.2.2 Installing in Slabs Including Slabs on Grade

Conduits shall be installed as close to the middle of concrete slabs as practicable without disturbing the reinforcement. Outside diameter shall not exceed 1/3 of the slab thickness and conduits shall be spaced not closer than 3 diameters on centers except at cabinet locations where the slab thickness shall be increased as approved by the Contracting Officer.

3.2.2.3 Exposed Raceways

Exposed raceways shall be installed parallel or perpendicular to walls, structural members, or intersections of vertical planes and ceilings. Raceways under raised floors and above accessible ceilings shall be considered as exposed installations in accordance with NFPA 70 definitions.

3.2.2.4 Changes in Direction of Runs

Changes in direction of runs shall be made with symmetrical bends or cast-metal fittings. Field-made bends and offsets shall be made with an approved hickey or conduit-bending machine. Crushed or deformed raceways shall not be installed. Trapped raceways in damp and wet locations shall be avoided where possible. Care shall be taken to prevent the lodgment of plaster, dirt, or trash in raceways, boxes, fittings and equipment during the course of construction. Clogged raceways shall be entirely freed of obstructions or shall be replaced.

3.2.2.5 Supports

Metallic conduits and tubing shall be securely and rigidly fastened in place at intervals of not more than 3 meters and within 900 mm of boxes, cabinets, and fittings, with approved pipe straps, wall brackets, conduit clamps, conduit hangers, threaded C-clamps, or ceiling trapeze. C clamps or beam clamps shall have strap or rod-type retainers. Rigid plastic conduits (if permitted as a wiring method) shall be supported as indicated above, except that they will be supported at intervals as indicated in NFPA 70. Loads and supports shall be coordinated with supporting structure to prevent damage or deformation to the structures, but no load shall be applied to joist bridging. Fastenings shall be by wood screws or screw-type nails to wood; by toggle bolts on hollow masonry units; by expansion bolts on concrete or brick; by machine screws, welded threaded studs, heat-treated or spring-steel-tension clamps on steel work. Nail-type nylon anchors or threaded studs driven in by a powder charge and provided with lock washers and nuts may be used in lieu of expansion bolts or machine screws. Raceways or pipe straps shall not be welded to steel structures. Holes cut to a depth of more than 40 mm in reinforced concrete beams or to a depth of more than 20 mm in concrete joists shall avoid cutting the main reinforcing bars. Holes not used shall be filled. In partitions of light steel construction, sheet-metal screws may be used. Conduit shall not be supported using wire or nylon ties. Raceways shall be installed as a complete system and be independently supported from the structure. Upper raceways shall not be the support of lower raceways. Supporting means will not be shared between electrical raceways and mechanical piping or ducts and shall not be fastened to hung ceiling supports. Conduits shall be fastened to all sheet-metal boxes and cabinets with two locknuts where required by the NFPA 70, where insulating bushings are used, and where bushings cannot be brought into firm contact with the box; otherwise, a single locknut and bushing may be used. Threadless fittings for electrical metallic tubing shall be of a type approved for the conditions encountered. A pull wire shall be inserted in each empty raceway in which wiring is to be installed by others if the raceway is more than 15 meters in length and contains more than the equivalent of two 90-degree bends, or where the raceway is more than 45 meters in length. The pull wire shall be of No. 14 AWG zinc-coated steel, or of plastic having not less than 1.4 MPa tensile strength. Not less than 254 mm of slack shall be left at each end of the pull wire. Additional support for horizontal runs is not required when EMT rests on steel stud cutouts.

3.2.2.6 Exposed Risers

Exposed risers in wire shafts of multistory buildings shall be supported by U clamp hangers at each floor level, and at intervals not to exceed 3 meters.

3.2.2.7 Omitted

3.2.2.8 Communications Raceways

Communications raceways indicated shall be installed in accordance with the previous requirements for conduit and tubing and with the additional requirements that no length of run shall exceed 15 meters for 15 mm and 20 mm sizes, and 30 meters for 25 mm or larger sizes, and shall not contain more than two 90-degree bends or the equivalent. Additional pull or junction boxes shall be installed to comply with these limitations whether or not indicated. Inside radii of bends in conduits of 25 mm size or larger shall be not less than ten times the nominal diameter.

3.2.3 Cable Systems

Cables shall be installed concealed behind ceiling or wall finish where practicable. Cables shall be threaded through holes bored on the approximate centerline of wood members; notching of surfaces will not be permitted. Sleeves shall be provided through bond beams of masonry-block walls for threading cables through hollow spaces. Exposed cables shall be installed parallel or at right angles to walls or structural members. In rooms or areas not provided with ceiling or wall finish, cables and outlets shall be installed so that a room finish may be applied in the future without disturbing the cables or resetting the boxes.

3.2.4 Omitted
3.2.5 Omitted
3.2.6 Omitted

3.2.7 Cables and Conductors

Aluminum conductors shall have ampacity of not less than the copper conductors. Wire connectors of insulating material or solderless pressure connectors properly taped shall be utilized for all splices. Pressure connectors for aluminum conductors shall have tinned aluminum bodies. Aluminum contact surfaces of conductors and connectors shall be cleaned and covered with antioxidant compound prior to making of connections.

3.2.7.1 Sizes

All sizes are based on copper conductors, unless otherwise indicated. Sizes shall be not less than indicated. Branch-circuit conductors shall be not smaller than No. 12 AWG. Conductors for branch circuits of 120 volts more than 30 meters long, from panel to load center, shall be no smaller than No. 10 AWG. Class 1 remote control and signal circuit conductors shall be not less than No. 14 AWG. Class 2 remote control and signal circuit conductors shall be not less than No. 16 AWG. The conductor sizes are based on the use of THWN insulation. Higher temperature rated conductors will be permitted to be used,

if the UL tested temperature ratings for which the equipment in the circuit is marked are not exceeded. Conductor sizes shall be based on the use of minimum 75 degrees C insulated conductors for branch circuits and feeders.

3.2.7.2 Power Conductor Identification

Phase conductors shall be identified by color coding. The color of the insulation on phases A, B, and C respectively (for three phase) or phases A and B respectively (for single phase) of different voltage systems shall be as follows:

120/208 volt, 3-phase: Black, red, and blue.

120/240 volt, single/phase: Black and red.

Conductor phase and voltage identification shall be made by color-coded insulation for all conductors smaller than No. 6 AWG. For conductors No. 6 AWG and larger, identification shall be made by color-coded insulation, or conductors with black insulation may be furnished and identified by the use of half-lapped bands of colored electrical tape wrapped around the insulation for a minimum of 75 mm of length near the end, or other method as submitted by the Contractor and approved by the Contracting Officer. Conductor identification shall be provided within each enclosure where a tap, splice, or termination is made. Phase identification by a particular color shall be maintained continuously for the length of a circuit, including junctions.

3.2.7.3 Control Conductor Identification

Control circuit conductor identification shall be made by color-coded insulated conductors, plastic-coated self-sticking printed markers, permanently attached stamped metal foil markers, or equivalent means as approved. Control circuit terminals of equipment shall be properly identified. Terminal and conductor identification shall match that shown on approved detail drawings. Hand lettering or marking is not acceptable.

3.3 BOXES AND SUPPORTS

Boxes shall be provided in the wiring or raceway systems wherever required for pulling of wires, making connections, and mounting of devices or fixtures. Boxes for metallic raceways, 101.6 by 101.6 mm nominal size and smaller, shall be of the cast-metal hub type when located in normally wet locations, when flush and surface mounted on outside of exterior surfaces, or when located in hazardous areas. Large size boxes shall be NEMA 1 or as shown. Boxes in other locations shall be sheet steel except that aluminum boxes may be used with aluminum conduit, and nonmetallic boxes may be used with nonmetallic conduit and tubing, when permitted by NFPA 70. In partitions of light steel construction bar hangers with 25 mm long studs, mounted between metal wall studs or metal stud "C" brackets snapped on and tab-locked to metal wall studs, shall be used to secure boxes to the building structure. When "C" brackets are used, additional box support shall be provided on the side of the box opposite the brackets. The edges of boxes for electrical devices shall be flush with the finished surfaces in gypsum and plasterboard installations. Boxes for mounting lighting fixtures shall be not less than 101.6 mm square except smaller boxes may be installed as required by fixture configuration, as approved. Boxes installed for concealed wiring shall be

provided with suitable extension rings or plaster covers, as required. The bottom of boxes installed in masonry-block walls for concealed wiring shall be flush with the top of a block to minimize cutting of blocks, and boxes shall be located horizontally to avoid cutting webs of block. Indicated elevations are approximate, except where minimum mounting heights for hazardous areas are required by NFPA 70. Unless otherwise indicated, boxes for wall switches shall be mounted 1.2 meters above finished floors. Switch and outlet boxes on opposite sides of fire rated walls shall be separated by a minimum horizontal distance of 600 mm. Cast metal boxes installed in wet locations and boxes installed flush with the outside of exterior surfaces shall be gasketed. Separate boxes shall be provided for flush or recessed fixtures when required by the fixture terminal operating temperature, and fixtures shall be readily removable for access to the boxes unless ceiling access panels are provided. Boxes and supports shall be fastened to wood with wood screws or screw-type nails of equal holding strength, with bolts and metal expansion shields on concrete or brick, with toggle bolts on hollow masonry units, and with machine screws or welded studs on steel work. Threaded studs driven in by powder charge and provided with lockwashers and nuts, or nail-type nylon anchors may be used in lieu of expansion shields, or machine screws. In open overhead spaces, cast-metal boxes threaded to raceways need not be separately supported except where used for fixture support; cast-metal boxes having threadless connectors and sheet metal boxes shall be supported directly from the building structure or by bar hangers. Hangers shall not be fastened to or supported from joist bridging. Cast-metal boxes with 2.4 mm wall thickness are acceptable. Where bar hangers are used, the bar shall be attached to raceways on opposite sides of the box and the raceway shall be supported with an approved type fastener not more than 600 mm from the box. Penetration of more than 38.1 mm into reinforced-concrete beams or more than 19.1 mm into reinforced concrete joists shall avoid cutting any main reinforcing steel.

3.3.1 Boxes for Use with Raceway Systems

Boxes for use with raceway systems shall be not less than 38.1 mm deep except where shallower boxes required by structural conditions are approved. Sheetmetal boxes for other than lighting fixtures shall be not less than 101.6 mm square except that 101.6 by 50.8 mm boxes may be used where only one raceway enters the outlet. Contractor shall size the telephone outlet boxes as required by the number, size and type of outlets specified and as required by the outlets furnished by the Contractor.

3.3.2 Boxes for Use with Cable Systems

Boxes for use with cable systems shall be not less than 76.2 by 50.8 mm sectional boxes, 50.8 mm deep.

3.3.3 Pull Boxes

Pull boxes of not less than the minimum size required by NFPA 70 shall be constructed of aluminum or galvanized sheet steel, except where cast-metal boxes are required in locations specified above. Boxes shall be furnished with screw-fastened covers. Where several feeders pass through a common pull box, the feeders shall be tagged to indicate clearly the electrical characteristics, circuit number, and panel designation.

3.3.4 Omitted
3.3.5 Omitted

3.3.6 Conduit Stub-Ups

Conduits stubbed up through concrete floors for connections to freestanding equipment shall be provided with a short elbow and an adjustable top or coupling threaded inside for plugs, set flush with the finished floor. Wiring shall be extended in rigid threaded conduit to equipment, except that where required, flexible conduit may be used 150 mm above the floor. Screwdriver-operated threaded flush plugs shall be installed in conduits from which no equipment connections are made to suit the devices installed.

3.4 DEVICE PLATES

One-piece type device plates shall be provided for all outlets and fittings. Plates on unfinished walls and on fittings shall be of zinc-coated sheet steel, cast-metal, or impact resistant plastic having rounded or beveled edges. Plates on finished walls shall be of steel with baked white enamel finish unless otherwise indicated. Screws shall be of metal with countersunk heads, in a color to match the finish of the plate. Plates shall be installed with all four edges in continuous contact with finished wall surfaces without the use of mats or similar devices. Plaster fillings will not be permitted. Plates shall be installed with an alignment tolerance of 1.6 mm. The use of sectional-type device plates will not be permitted. Plates installed in wet locations shall be gasketed and provided with a hinged, gasketed cover, unless otherwise specified.

3.5 RECEPTACLES

3.5.1 Single and Duplex

Single and duplex receptacles shall be rated 15 amperes, 125 volts, two-pole, three-wire, grounding type with polarized parallel slots. Bodies shall be white, and supported by mounting strap having plaster ears. Contact arrangement shall be such that contact is made on two sides of an inserted blade. Receptacle shall be side- or back-wired with two screws per terminal. The third grounding pole shall be connected to the metal mounting yoke. Switched receptacles shall be the same as other receptacles specified except that the ungrounded pole of each suitable receptacle shall be provided with a separate terminal. Only the top receptacle of a duplex receptacle shall be wired for switching application. Receptacles with ground fault circuit interrupters shall have the current rating as indicated, and shall be UL Class A type unless otherwise shown. Ground fault circuit protection shall be provided as required by NFPA 70 and as indicated on the drawings.

3.5.2 Weatherproof Applications

Weatherproof receptacles shall be suitable for the environment, damp or wet as applicable, and the housings shall be labeled to identify the allowable use. Receptacles shall be marked in accordance with UL 514A for the type of use indicated; "Damp locations", "Wet Locations", "Wet Location Only When Cover Closed". Assemblies shall be installed in accordance with the manufacturer's recommendations.

3.5.2.1 Damp Locations

Receptacles in damp locations shall be mounted in an outlet box with a gasketed, weatherproof, cast-metal cover plate (device plate, box cover) and a gasketed cap (hood, receptacle cover) over each receptacle

opening. The cap shall be either a screw-on type permanently attached to the cover plate by a short length of bead chain or shall be a flap type attached to the cover with a spring loaded hinge.

3.5.2.2 Wet Locations

Receptacles in wet locations must be installed in an assembly rated for such use whether the plug is inserted or withdrawn, unless otherwise indicated. In a duplex installation, the receptacle cover shall be configured to shield the connections whether one or both receptacles are in use.

3.5.3 Omitted

3.5.4 Receptacles, 20 Ampere, 250-Volt

Receptacles, single, 20-ampere, 250-volt, shall be molded plastic, two-pole, three-wire or three-pole, four-wire, grounding type complete with appropriate mating cord-grip plug.

3.5.5 Receptacles, 30-Ampere, 125/250-Volt

Receptacles, single, 30-ampere, 125/250-volt, shall be molded-plastic, three-pole, three-wire type, complete with appropriate mating cord-grip type attachment plug. Each dryer receptacle shall be furnished with a non-detachable power supply cord for connection to the electric clothes dryer. The cord shall be an angle-type 900 mm (36-inch) length of Type SRD range and dryer cable with three No. 10 AWG conductors.

3.5.6 Receptacles, 30-Ampere, 250-Volt

Receptacles, single, 30-ampere, 250-volt, shall be molded-plastic, three-pole, three-wire type, complete with appropriate mating cord-grip plug.

3.5.7 Omitted
3.5.8 Omitted

3.5.9 Special-Purpose or Heavy-Duty Receptacles

Special-purpose or heavy-duty receptacles shall be of the type and of ratings and number of poles indicated or required for the anticipated purpose. Contact surfaces may be either round or rectangular. One appropriate straight or angle-type plug shall be furnished with each receptacle. Locking of receptacles, indicated to be the locking type, shall be accomplished by the rotation of the plug.

3.6 WALL SWITCHES

Wall switches shall be of the totally enclosed tumbler type. The wall switch handle and switch plate color shall be white. Wiring terminals shall be of the screw type or of the solderless pressure type having suitable conductor-release arrangement. Not more than one switch shall be installed in a single-gang position. Switches shall be rated 20 ampere 120 volt for use on alternating current only. Pilot lights indicated shall consist of yoke-mounted candelabra-base sockets rated at 75 watts, 125 volts, and fitted

with glass or plastic jewels. A clear 6 watt lamp shall be furnished and installed in each pilot switch. Jewels for use with switches controlling motors shall be green, and jewels for other purposes shall be red. Dimming switches shall be solid-state flush mounted, sized for the loads.

3.7 SERVICE EQUIPMENT

Service-disconnecting means shall be of the enclosed molded-case circuit breaker type as indicated with external handle for manual operation. When service disconnecting means is a part of an assembly, the assembly shall be listed as suitable for service entrance equipment. Enclosures shall be sheet metal with hinged cover for surface mounting unless otherwise indicated.

3.8 PANELBOARDS AND LOADCENTERS

Circuit breakers and switches used as a motor disconnecting means, and not in sight of the motor and the driven machinery location, shall be capable of being locked in the open position. Door locks shall be keyed alike. Nameplates shall be as approved. Directories shall be typed to indicate loads served by each circuit and mounted in a holder behind a clear protective covering. Busses shall be copper or aluminum.

3.8.1 Loadcenters

Loadcenters shall be circuit breaker equipped.

3.8.2 Panelboards

Panelboards shall be circuit breaker or fusible switch equipped as indicated on the drawings.

3.9 POWER-SWITCHGEAR AND DEAD FRONT DISTRIBUTION SWITCHBOARDS

Assemblies shall be metal-enclosed, freestanding general-purpose ventilated type and shall be installed to provide front access. Busses shall be copper. Assembly shall be approximately 2.3 meters high; arrangement of circuit breakers and other items specified shall be as indicated. The Ampere Interrupting Capacity (A.I.C.) rating of the switchboards and circuit breakers shall be based on the maximum fault current available.

3.9.1 Circuit Breakers

Circuit breakers shall be molded-case solid state circuit breakers with long time, short time and instantaneous settings with indicators.

3.9.2 Auxiliary Equipment

3.9.2.1 Digital Metering

A microprocessor based device shall provide complete true RMS metering of voltage and current through the seventh harmonic with plus or minus 1 percent accuracy. The meter shall also indicate peak demand power and energy values.

3.10 FUSES

Equipment provided under this contract shall be provided with a complete set of properly rated fuses when the equipment manufacturer utilize fuses in the manufacture of the equipment, or if current-limiting fuses are required to be installed to limit the ampere-interrupting capacity of circuit breakers or equipment to less than the maximum available fault current at the location of the equipment to be installed. Fuses shall have a voltage rating of not less than the phase-to-phase circuit voltage, and shall have the time-current characteristics required for effective power system coordination.

3.10.1 Cartridge Fuses; Noncurrent-Limiting Type

Cartridge fuses of the noncurrent-limiting type shall be Class H, nonrenewable, dual element, time lag type and shall have interrupting capacity of 10,000 amperes. At 500 percent current, cartridge fuses shall not blow in less than 10 seconds. Cartridge fuses shall be used for circuits rated in excess of 30 amperes, 125 volts, except where current-limiting fuses are indicated.

3.10.2 Cartridge Fuses; Current-Limiting Type

Cartridge fuses, current-limiting type, Class J shall have tested interrupting capacity not less than 100,000 amperes. Fuse holders shall be the type that will reject all Class H fuses.

3.11 UNDERGROUND SERVICE

Unless otherwise indicated, interior conduit systems shall be stubbed out 1.5 m beyond the building wall and 600 mm below finished grade, for interface with the exterior service lateral conduits and exterior communications conduits. Outside conduit ends shall be bushed and capped, or plugged until connected to exterior conduit systems. Underground service lateral conductors will be extended to building service entrance and terminated in accordance with the requirements of Section 16375 ELECTRICAL DISTRIBUTION SYSTEM, UNDERGROUND and NFPA 70.

3.12 OMITTED

3.13 MOTORS

Motors shall be as specified in paragraph Motors, ac, Fractional and Integral Kilowatt (Horsepower), whether or not motors are separately provided or included in equipment assemblies specified in other sections of these specifications. Each motor shall conform to the Kw (hp) and voltage ratings indicated, and shall have a service factor and other characteristics that are essential to the proper application and

performance of the motors under conditions shown or specified. Three-phase motors for use on 3-phase 208-volt systems shall have a nameplate rating of 200 volts. Unless otherwise specified, all motors shall have open frames, and continuous-duty classification based on a 40-degree C ambient temperature reference. Polyphase motors shall be squirrel-cage type, having normal-starting-torque and low-starting-current characteristics, unless other characteristics are specified in other sections of these specifications or shown on contract drawings. The Contractor shall be responsible for selecting the actual kilowatt (horsepower) ratings and other motor requirements necessary for the applications indicated. When electrically driven equipment furnished under other sections of these specifications materially differs from the design, the Contractor shall make the necessary adjustments to the wiring, disconnect devices and branch-circuit protection to accommodate the equipment actually installed.

3.14 MOTOR CONTROL

Each motor or group of motors requiring a single control shall be provided under other sections of these specifications with a suitable controller and devices that will perform the functions as specified for the respective motors. Each motor of 93 W (1/8 hp) or larger shall be provided with thermal-overload protection. Polyphase motors shall have overload protection in each ungrounded conductor. The overload-protection device shall be provided either integral with the motor or controller, or shall be mounted in a separate enclosure. Unless otherwise specified, the protective device shall be of the manually reset type. Single or double pole tumbler switches specifically designed for alternating-current operation only may be used as manual controllers for single-phase motors having a current rating not in excess of 80 percent of the switch rating. Automatic control devices such as thermostats, float or pressure switches may control the starting and stopping of motors directly, provided the devices used are designed for that purpose and have an adequate kilowatt (horsepower) rating. When the automatic-control device does not have such a rating, a magnetic starter shall be used, with the automatic-control device actuating the pilot-control circuit. When combination manual and automatic control is specified and the automatic-control device operates the motor directly, a double-throw, three-position tumbler or rotary switch shall be provided for the manual control; when the automatic-control device actuates the pilot control circuit of a magnetic starter, the latter shall be provided with a three-position selector switch marked MANUAL-OFF-AUTOMATIC. Connections to the selector switch shall be such that only the normal automatic regulatory control devices will be bypassed when the switch is in the Manual position; all safety control devices, such as low- or high-pressure cutouts, high-temperature cutouts, and motor-overload protective devices, shall be connected in the motor-control circuit in both the Manual and the Automatic positions of the selector switch. Control circuit connections to any MANUAL-OFF-AUTOMATIC switch or to more than one automatic regulatory control device shall be made in accordance with wiring diagram approved by the Contracting Officer unless such diagram is included on the drawings. All controls shall be 120 volts or less unless otherwise indicated.

3.14.1 Reduced-Voltage Controllers

Reduced-voltage controllers shall be provided for polyphase motors 20 kW (20 hp) or larger. Reduced-voltage starters shall be of the single-step autotransformer, reactor, or resistor type having an adjustable time interval between application of reduced and full voltages to the motors. Wye-delta reduced voltage starter or part winding increment starter having an adjustable time delay between application of voltage to first and second winding of motor may be used in lieu of the reduced voltage

starters specified above for starting of motor-generator sets, centrifugally operated equipment or reciprocating compressors provided with automatic unloaders.

3.14.2 Omitted

3.14.3 Contacts

Contacts in miscellaneous control devices such as float switches, pressure switches, and auxiliary relays shall have current and voltage ratings in accordance with NEMA ICS 2 for rating designation B300.

3.14.4 Safety Controls

Safety controls for boilers shall be connected to a 2-wire, 120 volt grounded circuit supplied from the associated boiler-equipment circuit. Where the boiler circuit is more than 120 volts to ground, safety controls shall be energized through a two-winding transformer having its 120 volt secondary winding grounded. Overcurrent protection shall be provided in the ungrounded secondary conductor and shall be sized for the load encountered.

3.15 MOTOR-DISCONNECT MEANS

Each motor shall be provided with a disconnecting means when required by NFPA 70 even though not indicated. For single-phase motors, a single or double pole toggle switch, rated only for alternating current, will be acceptable for capacities less than 30 amperes, provided the ampere rating of the switch is at least 125 percent of the motor rating. Switches shall disconnect all ungrounded conductors.

3.16 TRANSFORMERS

Only single- and three-phase transformers having two windings per phase will be approved. "T" connections may be used for transformers rated at 15 kVA or below. The insulation on transformer windings may be the manufacturer's standard for transformers rated for operation in a 40-degree Celsius ambient temperature unless a higher-temperature insulation is shown, specified or required by the application indicated. Single kVA ratings shown are based on self-cooled operation. Transformers to be located within the building may be provided in the manufacturer's standard, ventilated indoor enclosure designed for use in a 40-degree Celsius ambient temperature, unless otherwise specified or shown. The average sound level in decibels (dB) of transformers shall not exceed the following dB level for the applicable kVA rating range listed:

kVA RANGE	dB SOUND LEVEL
1-50	50

3.16.1 Conventional Dry-Type Transformers

Transformers having the primary or higher-voltage winding rated at 600 volts or less and a secondary or lower-voltage winding rated at 240 volts or less may be manufacturer's standard ventilated or enclosed, self-cooled type of transformer unless otherwise shown, specified or required for proper and safe application.

3.17 LAMPS AND LIGHTING FIXTURES

Ballasted fixtures shall have ballasts which are compatible with the specific type and rating of lamps indicated and shall comply with the applicable provisions of the publications referenced. Ballast shall provide the normal rated life as stated by lamp manufacturers.

3.17.1 Lamps

Lamps of the type, wattage, and voltage rating indicated shall be delivered to the project in the original cartons and installed in the fixtures just prior to the completion of the project.

3.17.1.1 Incandescent

Incandescent lamps shall be for 125-volt operation unless otherwise indicated.

3.17.1.2 Fluorescent

Fluorescent lamps shall have a correlated color temperature of 3500 degrees Kelvin and a color rendering index (CRI) of 75 unless otherwise indicated, and shall be of a type that will not require starter switches. Lamps shall be of the rapid-start type unless otherwise shown or approved.

3.17.1.3 High-Intensity-Discharge

High-intensity-discharge lamps shall be the metal halide type with ceramic discharge tube unless otherwise indicated, shown, or approved.

3.17.2 Fixtures

Fixture data shall be submitted as specified in paragraph SUBMITTALS.
Fixtures shall be as shown on the drawings and shall conform to the following specifications. Illustrations shown on the drawings are indicative of the general type desired and are not intended to restrict selection to fixtures of any particular manufacturer. Fixtures of similar designs and equivalent energy efficiency, light distribution and brightness characteristics, and of equal finish and quality will be acceptable if approved. Fluorescent emergency light fixtures shall be furnished with self-contained battery packs where indicated.

3.17.2.1 Accessories

Accessories such as straps, mounting plates, nipples, or brackets shall be provided for proper installation. Open type fluorescent fixtures with exposed lamps shall have a wire-basket type guard.

3.17.2.2 Suspended Fixtures

Suspended fixtures shall be provided with swivel hangers in order to ensure a plumb installation. Pendants, rods, or chains 1.2 meters or longer excluding fixture, shall be braced to limit swinging. Bracing shall be

three directional, 120 degrees apart. Single unit suspended fluorescent fixtures shall have twin-stem hangers. Multiple unit or continuous-row fluorescent units shall have a tubing or stem for wiring at one point, and a tubing or rod suspension provided for each length of chassis including one at each end. Maximum distance between adjacent tubing or stems shall be 3.1 meters. Rods shall be of not less than 4.8 mm diameter. Flexible raceway shall be installed to each fixture from an overhead junction box. Fixture to fixture wiring installation is allowed only when fixtures are installed end to end in a continuous run.

3.17.2.3 Ceiling Fixtures

Ceiling fixtures shall be coordinated with and suitable for installation in, on, or from the suspended ceiling provided under other sections of these specifications. Installation and support of fixtures shall be in accordance with the NFPA 70 and manufacturer's recommendations. Where seismic requirements are specified herein, fixtures shall be supported as shown or specified. Recessed fixtures shall have adjustable fittings to permit alignment with ceiling panels. Recessed fixtures installed in fire-resistive type of suspended ceiling construction shall have the same fire rating as the ceiling or shall be provided with fireproofing boxes having materials of the same fire rating as the ceiling panels, in conformance with UL-03. Surface-mounted fixtures shall be suitable for fastening to the structural support for ceiling panels.

3.17.2.4 Sockets

Sockets of industrial, strip, and other open type fluorescent fixtures shall be of the type requiring a forced movement along the longitudinal axis of the lamp for insertion and removal of the lamp.

3.18 OCCUPANCY SENSOR SYSTEM

3.18.1 General Requirements

Contractor's work to include all labor, materials, tools, appliances, control hardware, sensor, wire, junction boxes and equipment necessary for and incidental to the delivery, installation and furnishing of a completely operational occupancy sensor lighting control system as described herein. Contractor shall coordinate all work described in this section with all other applicable plans and specifications, including but not limited to wiring, conduit, fixtures, HVAC systems and building management systems.

3.18.2 Equipment Qualification

Products supplied shall be from a manufacturer that has been continuously involved in the manufacturing of occupancy sensors for a minimum of 5 years. All components shall be UL listed, offer a 5-year warranty and meet all State and local applicable code requirements.

3.18.3 System Description

The objective of this section is to ensure the proper installation of the occupancy sensor based lighting control system so that lighting is turned off automatically after reasonable time delay when a room or area is vacated by the last person to occupy said room or area. The occupancy sensor based lighting control shall accommodate all conditions of space utilization and all irregular work hours and habits. Contractor

shall warrant all equipment furnished in accordance to this specification to be undamaged, free of defects in materials and workmanship, and in conformance with the specifications. The supplier's obligation shall include repair or replacement, and testing without charge to the Government, all or any parts of equipment which are found to be damaged, defective or nonconforming and returned to the supplier. The warranty shall commence upon the Government's acceptance of the project. Warranty on labor shall be for a minimum period of 1 year.

3.18.4 Submittals

System data shall be submitted as specified in paragraph SUBMITTALS.

3.18.5 System Operation

It shall be the Contractor's responsibility to make all proper adjustments to assure Government's satisfaction with the occupancy system.

3.18.6 Products

All sensors shall be capable of operating normally with any electronic ballast, PL lamp systems and rated motor loads. Coverage of sensors shall remain constant after sensitivity control has been set. No automatic reduction shall occur in coverage due to the cycling of air conditioner or heating fans. All sensors shall have readily accessible, user adjustable controls for time delay and sensitivity. Controls shall be recessed to limit tampering. In the event of failure, a bypass manual "override on" shall be provided on each sensor. When bypass is utilized, lighting shall remain on constantly or control shall divert to a wall switch until sensor is replaced. This control shall be recessed to prevent tampering. All sensors shall provide a method of indication to verify that motion is being detected during testing and that the unit is working. Where specified, sensor shall have an internal additional isolated relay with normally open, normally closed and common outputs for use with HVAC control, data logging and other control options. Sensors utilizing separate components to achieve this function are not acceptable. All sensors shall have no leakage current to load, in manual or in auto/off mode, for safety purposes and shall have voltage drop protection. All sensors shall have UL rated, 94 V-0 plastic enclosures.

3.18.6.1 Ultrasonic Occupancy Sensors

The occupancy sensors shall be capable of detecting presence in the floor area to be controlled by detecting doppler shifts in transmitted ultrasound.

The ultrasonic frequency shall be 25 kHz at plus or minus 0.005 percent. Occupancy sensors shall be precision crystal controlled and shall not interfere with each other when two or more are placed in the same area. Ultrasonic circuit shall be solid-state crystal controlled with advanced signal processing.

Sensors of varying frequencies shall not be allowed to prevent sensors from interfering with each other and to assure compatibility in the event more sensors are added or units are replaced.

Detection shall be maintained when a person of average size and weight moves only within or a maximum distance of 300 mm either in a horizontal or vertical manner at the approximate speed of 300 mm per

second. The sum of this distance, volume and speed represent the average condition occupancy sensors must meet in order that the lights will not go off when a person is reading or writing while seated at a desk.

Each sensor shall be furnished with a convenient shunt provision which will enable a custodian or building engineer to by-pass the sensor in the event of failure. This by-pass provisions pin shall remain in the sensor and be visible from the floor as a constant reminder that the automatic function has been by-passed.

The sensors are to be ceiling mounted and not protrude more than 37.5 mm and shall blend in aesthetically with the ceiling.

Sensors shall have a multidirectional transmitter with temperature and humidity resistant, 25 kHz tuned ultrasonic receivers. Ultrasonic receivers shall be temperature and humidity resistant with less than a 6dB shift in the humidity range of 10 percent to 90 percent and less than a 10dB shift in the temperature range of minus 20 degrees to 60 degrees C.

Sensors can be wired in parallel with up to three sensors per power pack to allow coverage of large areas.

Time delay range shall be adjustable from 15 seconds to 15 minutes.

Sensitivity adjustment shall range from off at "0" to maximum at "10."

Ultrasonic occupancy sensors shall be UL and CSA listed products.

Sensors shall operate on 24 volts dc power, current draw is 20 milliamps.

Hallway and corridor sensor shall be able to cover 14 meters each direction in a 3.1 meter hallway with walls.

3.18.6.2 Passive Infrared Sensors

The passive infrared sensors shall be capable of detecting presence in the floor area to be controlled by detecting changes in the infrared energy. Small movements shall be detected such as when a person is writing while seated at a desk.

The passive infrared sensor shall utilize a temperature compensated dual element sensor and a multi-element Fresnel lens.

Sensor shall have a daylight filter which ensures that the sensor is insensitive to short-wavelength infrared waves such as those emitted by the sun. Fresnel lens shall be a Poly IR 4 based material to offer superior performance in the infrared wavelengths. Lens shall have grooves facing in to avoid dust and residue buildup which effects IR reception. Sensor shall have an adjustable internal photo sensor that holds lighting off when the desired illumination is obtained. Sensor shall have a digital time delay adjustable from 15 seconds to 30 minutes. Sensitivity adjustment shall range from off at "0" to maximum at "10."

Adjustments and mounting hardware shall be concealed under a removable cover to prevent tampering with adjustments and hardware.

3.18.6.2.1 Ceiling Mounted Infrared Sensors

Sensor shall cover 140 square meters with standard lens and up to 8.4 meters with long-range lens when mounted at 3.7 meters. Sensor shall have an additional isolated relay with normally open, normally closed, and common outputs for use with HVAC control, data logging, and other control options. Sensors shall operate at 24 VDS, current draw is 26 milliamps. Sensors can be wired in parallel to allow coverage of large areas.

3.18.6.3 Omitted

3.18.6.4 Power and Slave Packs

Power pack shall be self-contained transformer relay module measuring approximately 43.75 mm by 68.75 mm by 37.5 mm. For ease and speed of installation power pack shall have 16 mm snap-in nipple for 16 mm knockouts and mounting on outside of enclosure. Power packs shall have dry contacts capable of switching 20 amp ballast load, 13 amp incandescent, 1 hp at 120VAC, 277VAC; 20 amp ballast, 13 amps general, 1 hp at 220-240VAC, 347VAC. Power pack shall provide 24 VDC at 100ma output capable of controlling four PIR or three ultrasonic occupancy sensors. Power packs shall be capable of parallel wiring without regard to ac phases on primary. Slave packs shall be identical in physical size of power packs and contain no transformer power supply and shall switch either 120VAc, 277VAC, or low voltage. Power pack can be used as stand alone, low voltage switch, or can be wired to sensor for auto control. Power pack shall be UL and CSA listed.

3.18.7 Circuit Control Hardware - CU

Control wiring between the sensors and the power and slave packs shall be Class II, 18-24 AWG, stranded UL classified, PVC insulated or TEFLON jacketed cable approved for use in plenums, where applicable.

3.18.8 Installation

It shall be the Contractor's responsibility to locate and aim sensory in the correct location required for complete and proper volumetric coverage within the range of coverage(s) of controlled areas per the manufacturer's recommendations. Rooms shall have 95 to 100 percent coverage to completely cover the controlled area to accommodate all occupancy habits of single or multiple occupants at any location within the room(s). The locations and quantities of sensors shown on the drawings are diagrammatic and indicate only the rooms which are to be provided with sensors. The Contractor shall provide additional sensors if required to properly and completely cover the respective room. It is the Contractor's responsibility to arrange a preinstallation meeting with the manufacturer's factory authorized representative at the project site, to verify placement of sensors and installation criteria. Proper judgment must be exercised in executing the installation so as to ensure the best possible installation in the available space and to overcome local difficulties due to space limitations or interference of structural components. The Contractor shall also provide at the project site, the training necessary to familiarize the Government's

personnel with the operation, use, adjustment, and problem solving diagnosis of the occupancy sensing devices and systems.

3.18.9 Factory Commissioning

Upon completion of the installation, the system shall be completely commissioned by the manufacturer's factory authorized technician who will verify all adjustments and sensor placement to ensure a trouble-free occupancy-based lighting control system. This service is provided at no additional cost to the Government. The Contractor shall provide the Contracting Officer's representative with 10 working days written notice of the scheduled commissioning date. Upon completion of the system fine tuning the factory authorized technician shall provide the proper training to the owner's personnel in the adjustment and maintenance of the sensors.

3.19 FLUORESCENT DIMMING SYSTEMS

The dimming system shall include dimming ballasts, dimming controls and all necessary interface devices required to uniformly dim all lamps simultaneously. All control devices including occupancy sensors shall be listed by the ballast manufacturer as being fully compatible with the dimming ballast.

The dimming switch shall be the micro-touch digital preset type with automatic fade and LED readout. The switch shall be UL listed for 120 or 277 volts at 60 hertz to control the indicated lighting loads. The dimming switch shall include fade to preset, fade to full brightness and fade to off. Two presets shall be stored in memory: user selected preset and full brightness. LED's shall indicate present light level, user preset and off status. The switch shall allow manual override to preset level without affecting the level set in memory. The switch shall return to the previous level after power interruption. The switch shall accept full-function commands from an unlimited number of multi-location remote switches. Toroidal filters shall be used to suppress RFI and EMI. An air gap to open the circuit completely shall be unobtrusive and not required for normal operation. The switch shall mount in a single gang wall box with a designer style faceplate.

The interface unit shall be a fully enclosed, self-contained single output unit UL listed for 10 amperes at 120 or 277 volts and 60 hertz. The unit shall receive input commands from the dimming switch and shall provide the appropriate output signal to control the electronic dimming ballast through the entire dimming range.

3.20 EQUIPMENT CONNECTIONS

All wiring not furnished and installed under other sections of the specifications for the connection of electrical equipment as indicated on the drawings shall be furnished and installed under this section of the specifications. Connections shall comply with the applicable requirements of paragraph WIRING METHODS. Flexible conduits 2 m or less in length shall be provided to all electrical equipment subject to periodic removal, vibration, or movement and for all motors. All motors shall be provided with separate grounding conductors. Liquid-tight conduits shall be used in damp or wet locations.

3.20.1 Motors and Motor Control

Control equipment furnished under this section of the specifications, and shown on the drawings, shall be connected under this section of the specifications unless shown or specified otherwise. Except as otherwise specifically noted, automatic-control wiring, signaling, and protective devices are not included in this section of the specifications, but shall be furnished and installed under other sections of the specifications. Control wiring not shown on the drawings shall be furnished under the other sections of the specifications.

3.20.2 Installation of Government-Furnished Equipment

Wiring shall be extended to the equipment, and proper connections made thereto.

3.20.3 Food Service Equipment Provided Under Other Sections

Wiring shall be extended to the equipment and proper connections made thereto.

3.21 COORDINATED POWER SYSTEM PROTECTION

A fault-impedance diagram, a load flow analysis or study, a short-circuit analysis or study, and a power system coordination study shall be prepared to demonstrate that protective system after devices have been properly calibrated, adjusted, set and tested. These data, including complete descriptive and technical data of all protective devices, diagrams, and studies as required to ensure complete coordination, shall be prepared in conformance with industry practices, standards, or with other technical data approved by the Contracting Officer, and shall be submitted for approval of the Contracting Officer in accordance with submittal SD-04, Drawings.

3.21.1 Determination of Facts

The Contractor shall coordinate with the Base Civil Engineer for short circuit current availability at the site.

3.21.2 Fault-Impedance Diagram

The diagram shall be prepared to reflect the system impedance of power sources available to supply the building or facility, and the impedance of the new power system components for the facility.

3.21.3 Fault Locations and Short-Circuit Current Availability (SCCA)

The fault-impedance diagram shall, as a minimum, show fault locations for each voltage transformation and at each power distribution bus. The SCCA available at each fault location shall be shown in tabular form on the diagram for a bolted line-to-line fault and a line-to-ground fault.

3.21.4 Protective Devices

The time-current characteristics, features, and nameplate data for each existing protective device, including fuses, circuit breakers, and protective relays shall be determined and documented when necessary to ensure coordination between existing and new protective devices. New protective devices

proposed, including devices with fixed or adjustable time-current characteristics and features, shall demonstrate proper coordination with existing devices and new and related devices required to:

a. Minimize the extent of power outages by the operation of the primary protective device nearest the load-side fault location.

b. Provide back-up protection on the supply-side of the primary protective device if the primary protective device fails to operate.

c. To ensure a minimum of a 0.2 second delay between the operation of the primary and the back-up, or secondary, protective device unless otherwise approved to prevent nuisance tripping.

3.21.5 Power System Coordination Study

The study shall include all data related to existing and new protective devices proposed as such data relates to the nameplate data, time-current characteristics, and the fixed or adjustable features of the existing or new protective devices. These data shall include:

a. The time-current characteristic curves published by the manufacturer of the protective devices or equipment having adjustable time-current characteristics.

b. Data published by the manufacturer of circuit breakers or protective relays which contain installation, operation and maintenance instructions for calibration, adjustment, setting, and testing of the specific protective device.

c. Composite time-current characteristic curves for primary, secondary and other related devices, as required to ensure coordinated power system protection between existing and new protective devices or equipment.

3.21.6 Circuit Protective Devices

The Contractor shall calibrate, adjust, set and test each new adjustable circuit protective device to ensure that they will function properly prior to the initial energization of the new power system under actual operating conditions.

3.22 HEATING TAPE

The heating tape shall be held in place with coated aluminum adhesive tape and shall be held with a hanger each time it enters or exits drain lines to protect the heating tape from mechanical damage.

3.23 PAINTING AND FINISHING

Field-applied paint on exposed surfaces shall be provided under Section 09900 PAINTING, GENERAL.

3.24 REPAIR OF EXISTING WORK

The work shall be carefully laid out in advance, and where cutting, channeling, chasing, or drilling of floors, walls, partitions, ceiling, or other surfaces is necessary for the proper installation, support, or anchorage of the conduit, raceways, or other electrical work, this work shall be carefully done, and any damage to building, piping, or equipment shall be repaired by skilled mechanics of the trades involved, at no additional cost to the Government.

3.25 TESTS

After the interior-wiring-system installation is completed, and at such time as the Contracting Officer may direct, the Contractor shall conduct an operating test for approval. The equipment shall be demonstrated to operate in accordance with the requirements of this specification. Continuity test shall be conducted on the telephone wiring system. The test shall be performed in the presence of the Contracting Officer. The Contractor shall furnish all instruments and personnel required for the tests, and the Government will furnish the necessary electric power. No part of the electrical distribution system shall be energized prior to the resistance testing of that system's ground rods and submission of test results to the Contracting Officer. Test reports shall indicate the location of the rod and the resistance and the soil conditions at the time the test was performed.

3.26 ONE-LINE DIAGRAM

A one-line diagram with main transformer, building disconnect means, and feeder breakers/switches to building panels located at the building disconnect shall be provided. Diagram shall be mounted under glass or shall be plastic laminated. The breaker/switch identification on the diagram shall match nameplate on the installed equipment.

3.27 LIGHTING CONTACTORS AND AUTOMATIC CONTROLS

3.27.1 Lighting Contactors

The mechanically held lighting contactor shall switch a load at 60 hertz with the indicated voltage, and shall have the indicated number of poles. The contactor shall be continuously rated for the indicated amperage per pole for all types of ballast and tungsten lighting, and shall nor require derating for use with high-inrush loads. The contactor shall have double-break, silver-cadmium-oxide power contacts. Auxiliary arcing contacts are not acceptable. All power contacts shall be convertible from N.O. to N.C., or vice-versa. All contacts shall have clearly visible N.O. and N.C. contact status indicators. The contactor shall be designed in accordance with NEMA ICS 2-211B, and shall be approved per UL 508. The contactor shall be industrial rated for applications up to 600 volts. The contactor shall have a NEMA Type 1 enclosure unless otherwise indicated. For mechanically held lighting contactors, the coil clearing contacts shall be supplied such that the contactor coils shall be energized only during the instance of operation, and both latch and unlatch coils shall be encapsulated.

3.27.2 Time Clock Lighting Controllers

The time clock shall be a 365-day digital lighting control device. The clock shall have 365-day holiday capabilities with 24 single dates and four season of unlimited duration. Different daily schedules shall be programmable within each season. The controller shall program in 1 minute resolution, shall have user

selectable daylight savings or standard time, and shall have automatic leap year correction. The controller shall be capable of 99 set points with separate scheduling each day of the week. Schedules shall be retained for 40 years without power, and the controller shall have 30-day backup power using a field replaceable lithium battery. Where two-channel time clocks are required, each channel shall be independently programmable for different off settings. Clocks controlling interior lights shall be initially programmed as indicated on the drawings. Clocks controlling exterior lights shall be initially programmed for the times indicated by the Contracting Officer's representative. The time clock shall be housed in an enclosure providing adequate ventilation for the components and protection from dust and dirt. The housing shall be approved by the clock manufacturer for use with the clock. All override switches, contactors and photoelectric cells used with he time clock shall be approved by the time clock manufacturer for use with the time clock.

3.27.3 Daylighting Photocontrol Sensor

The daylighting photocontrol sensor shall be a ceiling mounted low voltage low profile indoor photocell interfaced with the dimming ballasts to control lighting based on ambient light levels. The sensor shall measure the amount of illumination in its 60-degree field of view and utilized an analog output to control the ballasts to provide a dimming range from 20 percent to 100 percent illumination. The sensor will thereby control the light output based on the availability of natural light and on the inputted task illumination level and will hold the illumination at the required level. The light level rate of change from minimum to maximum illumination shall be set to occur in not less than 60 seconds. The sensor shall include an external override for 100 percent lighting.

3.27.4 Wall-Mounted Photoelectric Control

The photoelectric control shall consists of an epoxy coated, 16 mm diameter cadmium sulphide cell flush-mounted in a standard 62.5 mm by 106.25 mm weatherproof junction box recessed into the wall. Control activation shall include a delay of up to 2 minutes to prevent nuisance switching. The control shall operate in a temperature range of minus 40 degrees to plus 60 degrees (Celsius). The housing shall be a weather-resistant molded polycarbonate with ultrasonically welded seams. The cover shall be stainless steel with a neoprene gasket. The light sensitive area shall protrude through the center of the cover, and this opening shall also be sealed with a neoprene gasket. Control leads shall be no less than 150 mm.

END OF SECTION

This page intentionally blank

SECTION 16710

PREMISES DISTRIBUTION SYSTEM

PART 1 GENERAL

1.1 REFERENCES

The publications listed below form a part of this specification to the extent referenced. The publications are referred to in the text by basic designation only.

ELECTRONIC INDUSTRIES ASSOCIATION (EIA)

EIA 568A	(1995) Commercial Building Telecommunications Wiring Standard
EIA 569	(1990) Commercial Building Standard for Telecommunications Pathways and Spaces
EIA 606	(1993) Administration Standard for the Telecommunications Infrastructure of Commercial Buildings
EIA 607	(1994) Grounding and Bonding Requirements for the Telecommunications Infrastructure of Commercial Buildings
EIA TSB 36	(1991) Additional Cable Specifications for Unshielded Twisted Pair Cables
EIA TSB 40-A	(1994) Additional Transmission Specifications for Unshielded Twisted-Pair Connecting Hardware
EIA TSB 67	(DRAFT) Transmission Performance Specifications for Field Testing of UTP Cabling Systems

INSULATED CABLE ENGINEERS ASSOCIATION (ICEA)

ICEA S-80-576	(1988) Communications Wire and Cable for Wiring of Premises

NATIONAL FIRE PROTECTION ASSOCIATION (NFPA)

NFPA 70	(1999) National Electrical Code

1.2 SYSTEM DESCRIPTION

The premises distribution system shall consist of inside-plant horizontal, riser, and backbone cables and connecting hardware to transport telephone and data (including LAN) signals between equipment items in a building.

1.3 ENVIRONMENTAL REQUIREMENTS

Connecting hardware shall be rated for operation under ambient conditions of 0 to 60 degrees C and in the range of 0 to 95 percent relative humidity, noncondensing.

1.4 QUALIFICATIONS

1.4.1 Minimum Contractor Qualifications

All work under this section shall be performed by and all equipment shall be furnished and installed by a certified telecommunications contractor, hereafter referred to as the Contractor. With the exception of furnishing and installing conduit, electrical boxes, and pullwires, this work shall not be done by the electrical contractor. The Contractor shall have the following qualifications in telecommunications systems installation:

a. Contractor shall have a minimum of 3 years experience in the application, installation and testing of the specified systems and equipment.

b. All supervisors and installers assigned to the installation of this system or any of its components shall have factory certification from each equipment manufacturer that they are qualified to install and test the provided products. General electrical trade staff (electricians) shall not be used for the installation of the premises distribution system cables and associated hardware.

c. All installers assigned to the installation of this system or any of its components shall have a minimum of 3 years experience in the installation of the specified copper and fiber optic cable and components.

1.4.2 Minimum Manufacturer Qualifications

The equipment and hardware provided under this contract will be from manufacturers that have a minimum of 3 years experience in producing the types of systems and equipment specified.

1.5 SUBMITTALS

Government approval is required for submittals with a "GA" designation; submittals having an "FIO" designation are for information only. The following shall be submitted in accordance with Section 01330 SUBMITTAL PROCEDURES:

SD-01 Data

Spare Parts; FIO.

Lists of spare parts, tools, and test equipment for each different item of material and equipment specified, after approval of detail drawings, not later than 2 months prior to the date of beneficial occupancy. The data shall include a complete list of parts and supplies, with current unit prices and source of supply, and a list of spare parts recommended for stocking.

SD-04 Drawings

Premises Distribution System; GA.

Detail drawings including a complete list of equipment and material. Detail drawings shall contain complete wiring and schematic diagrams and other details required to demonstrate that the system has been coordinated and will function properly as a system. Drawings shall include vertical riser diagrams, equipment rack details, elevation drawings of telecommunications closet walls, outlet face plate details for all outlet configurations, sizes and types of all cables, conduits, and cable trays. Drawings shall show proposed layout and anchorage of equipment and appurtenances, and equipment relationship to other parts of the work including clearance for maintenance and operation. System drawings and records showing final configuration, including location, type, block, panel and terminal assignment of cabling in accordance with EIA 606, and floor plan layout of the equipment room.

SD-06 Instructions

Manufacturer's Recommendations; GA.

Where installation procedures, or any part thereof, are required to be in accordance with the recommendations of the manufacturer of the material being installed, printed copies of these recommendations, prior to installation shall be provided. Installation of the item will not be allowed to proceed until the recommendations are received and approved.

SD-08 Statements

Test Plan; GA.

Test plan defining the tests required to ensure that the system meets technical, operational and performance specifications, 60 days prior to the proposed test date. The test plan must be approved before the start of any testing. The test plan shall identify the capabilities and functions to be tested, and include detailed instructions for the setup and execution of each test and procedures for evaluation and documentation of the results.

Qualifications; GA.

The qualifications of the Manufacturer(s), Contractor(s), and the Installer(s) to perform the work specified herein. This shall include proof of the minimum qualifications specified herein.

SD-09 Reports

Test Reports; FIO.

Test reports in booklet form with witness signatures verifying execution of tests. Test results will also be provided on 89 mm diskettes in Microsoft Word 6.0 or greater format. Reports shall show the field tests performed to verify compliance with the specified performance criteria. Test reports shall include record of the physical parameters verified during testing. Test reports shall be submitted within 14 days after completion of testing.

SD-13 Certificates

Premises Distribution System; FIO.

Written certification that the premises distribution system fully complies with the EIA 568A, EIA 569, EIA 606, EIA TSB 36, and EIA TSB 40-A standards.

Materials and Equipment; FIO.

Where materials or equipment are specified to conform, or be constructed or tested to meet specific requirements, certification that the items provided conform to such requirements. Certification by a nationally recognized testing laboratory that a representative sample has been tested to meet the requirements, or a published catalog specification statement to the effect that the item meets the referenced standard, will be acceptable as evidence that the item conforms. Compliance with these requirements does not relieve the Contractor from compliance with other requirements of the specifications.

Installers; GA.

The Contractor shall submit certification that all the installers are factory certified to install and test the provided products.

SD-19 Operation and Maintenance Manuals

Manufacturer's Manuals; FIO.

Commercial off the shelf manuals for operation, installation, configuration, and maintenance for all products provided as a part of the premises distribution system. Specification sheets for all cable, connectors, and other equipment.

1.6 DELIVERY AND STORAGE

Equipment delivered and placed in storage shall be stored with protection from the weather, humidity and temperature variation, dirt and dust or other contaminants.

PART 2 PRODUCTS

2.1 MATERIALS AND EQUIPMENT

Materials and equipment shall be the standard products of a manufacturer regularly engaged in the manufacture of the products and shall be the manufacturer's latest standard design that has been in satisfactory use for at least 1 year prior to installation. Materials and equipment shall conform to the respective publications and other requirements specified below and to the applicable requirements of NFPA 70.

2.2 UNSHIELDED TWISTED PAIR CABLE SYSTEM

2.2.1 Riser Cable

Riser cable shall meet the requirements of ICEA S-80-576 and EIA 568A and EIA TSB 36 for Category 5 100-ohm unshielded twisted pair cable. Cable shall be label-verified. Cable jacket shall be factory marked at regular intervals indicating verifying organization and performance level. Conductors shall be solid untinned copper 24 AWG. Cable shall be rated CMR or CMP, as appropriate, per NFPA 70.

2.2.2 Horizontal Cable

Horizontal cable shall meet the requirements of EIA 568A and EIA TSB 36 for Category 5 horizontal cable. Cable shall be label-verified. Cable jacket shall be factory marked at regular intervals indicating verifying organization and performance level. Conductors shall be solid untinned copper 24 AWG. Cable shall be rated CMG or CMP, as appropriate, per NFPA 70.

2.2.3 Connecting Hardware

Connecting and cross-connecting hardware shall be the same category as the cable it serves. Hardware shall be in accordance with and EIA 568A and EIA TSB 40-A.

2.2.3.1 Telecommunications Outlets

Outlet plates shall come equipped with two modular jacks, with the top or left jack labeled "voice" and the bottom or right jack labeled "data" where indicated. Outlets shall have one 8-pin modular jack and one 6-pin modular jack. Each sleeping room shall have two outlet plates. Modular jacks shall be category 5 shall meet the requirements of EIA 568A and EIA TSB 40-A. Modular jack pin/pair configuration shall be T568 per EIA 568A and EIA TSB 40-A. Modular jacks shall be unkeyed. Faceplates shall be provided and shall be white in color, impact resistant plastic. Outlet assemblies used in the premises distribution system shall consist of modular jacks assembled into both simplex and duplex outlet assemblies in single or double gang covers as specified in this section and as indicated on the drawings. The modular jacks shall conform to the requirements of EIA 568A, EIA TSB 40-A, Category 5.

2.2.3.2 Terminal Blocks

Terminal blocks shall be wall mounted wire termination units consisting of insulation displacement connectors mounted in plastic blocks, frames or housings. Blocks shall be type 110 which meet the requirements of EIA 568A and EIA TSB 40-A for category 5. Blocks shall be mounted on standoffs and shall include cable management hardware. Insulation displacement connectors shall terminate 22 or 24 gauge solid copper wire as a minimum, and shall be connected in pairs so that horizontal cable and connected jumper wires are on separate connected terminals.

2.3 COAXIAL CABLE SYSTEM

2.3.1 Omitted

2.3.2 Horizontal Cable

CATV horizontal distribution cable shall meet the requirements of RG-11/U, RG-6/U, or RG-59/U coaxial cable. Cable shall be label-verified. Cable jacket shall be factory marked at regular intervals indicating verifying organization and performance level. Cable shall be rated CMP or CMG, as appropriate, per NFPA 70.

2.3.3 Connecting Hardware

2.3.3.1 Connectors

Connectors shall be "F-Type." CATV cable faceplates shall be provided and shall be white in color, impact resistant plastic, single gang, with double-sided female “F-Type” coupler.

2.4 EQUIPMENT MOUNTING BACKBOARD

Plywood backboards shall be provided, sized as shown, painted with white or light colored paint.

2.5 TELECOMMUNICATIONS OUTLET BOXES

Electrical boxes for telecommunication outlets shall be 117 mm square by 53 mm deep with minimum 9 mm deep single or two gang plaster ring as shown. Conduit shall be as indicated on the drawings. Only flexible conduit shall be installed in sleeping rooms. All telecommunications circuits terminating or passing through the Mechanical Room shall be placed in metallic conduit.

PART 3 EXECUTION

3.1 INSTALLATION

System components and appurtenances shall be installed in accordance with NFPA 70, manufacturer's instructions and as shown. Necessary interconnections, services, and adjustments required for a complete and operable signal distribution system shall be provided. Components shall be labeled in accordance with EIA 606. Penetrations in fire-rated construction shall be firestopped in accordance with Section 07270 FIRESTOPPING. Conduits, outlets and raceways shall be installed in accordance with Section 16415 ELECTRICAL WORK, INTERIOR. Wiring shall be installed in accordance with EIA 568A and as specified in Section 16415 ELECTRICAL WORK, INTERIOR. Wiring, and terminal blocks and outlets shall be marked in accordance with EIA 606. Cables shall not be installed in the same cable tray, utility pole compartment, or floor trench compartment with ac power cables. Cables not installed in conduit or wireways shall be properly secured and neat in appearance.

3.1.1 Horizontal Distribution Cable

The rated cable pulling tension shall not be exceeded. Cable shall not be stressed such that twisting, stretching or kinking occurs. Cable shall not be spliced. Fiber optic cables shall be installed either in conduit or through type cable trays to prevent microbending losses. Copper cable not in a wireway shall be suspended a minimum of 200 mm above ceilings by cable supports no greater than 1.5 m apart. Cable shall not be run through structural members or in contact with pipes, ducts, or other potentially damaging items. Placement of cable parallel to power conductors shall be avoided, if possible; a minimum separation of 300 mm shall be maintained when such placement cannot be avoided. Cables shall be terminated; no cable shall contain unterminated elements. Minimum bending radius shall not be exceeded during installation or once installed. Cable ties shall not be excessively tightened such that the transmission characteristics of the cable are altered.

Telecommunication cables in all bedrooms shall be installed in flexible conduit. Telecommunications cables terminating or passing through Mechanical Room shall be placed in metalic conduit.

3.1.2 Riser and Backbone Cable

Vertical cable support intervals shall be in accordance with manufacturer's recommendations. Cable bend radius shall not be less than ten times the outside diameter of the cable during installation and once installed. Maximum tensile strength rating of the cable shall not be exceeded. Cable shall not be spliced.

3.1.3 Telecommunications Outlets

3.1.3.1 Faceplates

As a minimum each jack shall be labeled as to its function and a unique number to identify cable link.

3.1.3.2 Cables

Unshielded twisted pair and fiber optic cables shall have a minimum of 150 mm of slack cable loosely coiled into the telecommunications outlet boxes. Minimum manufacturers bend radius for each type of cable shall not be exceeded.

3.1.3.3 Pull Cords

Pull cords shall be installed in all conduit serving telecommunications outlets which do not initially have fiber optic cable installed.

3.1.4 Terminal Blocks

Terminal blocks shall be mounted in orderly rows and columns. Adequate vertical and horizontal wire routing areas shall be provided between groups of blocks. Industry standard wire routing guides shall be utilized.

3.2 TERMINATION

Cables and conductors shall sweep into termination areas; cables and conductors shall not bend at right angles. Manufacturer's minimum bending radius shall not be exceeded. When there are multiple system type drops to individual workstations, relative position for each system shall be maintained on each system termination block or patch panel.

3.2.1 Unshielded Twisted Pair Cable

Each pair shall be terminated on appropriate outlets, terminal blocks or patch panels. No cable shall be unterminated or contain unterminated elements. Pairs shall remain twisted together to within the proper distance from the termination as specified in EIA TSB 40-A. Conductors shall not be damaged when removing insulation. Wire insulation shall not be damaged when removing outer jacket.

3.2.2 Coaxial Cable

Home run type station cables shall be terminated at each end. Backbone cables shall be terminated with appropriate connectors or end-of-line terminators as required. Loop-type cable systems shall be terminated with appropriate drop connectors and terminators as required. Backbone cable shield conductor shall be grounded to communications ground at only one point and shall not make electrical contact with ground anywhere else.

3.3 GROUNDING

Signal distribution system ground shall be installed in the telecommunications entrance facility and in each telecommunications closet in accordance with EIA 607 and Section 16415 ELECTRICAL WORK, INTERIOR.

3.4 ADDITIONAL MATERIALS

The Contractor shall provide the following additional materials required for facility startup.

a. Ten of each type outlet.

b. Ten of each type cover plate.

c. One of each type terminal block for each telecommunications closet.

d. Four patch cords of 3 m for each telecommunications closet.

e. One set of any and all special tools required to establish a cross connect and to change and/or maintain a terminal block.

3.5 TESTING

Materials and documentation to be furnished under this specification are subject to inspections and tests. All components shall be terminated prior to testing. Equipment and systems will not be accepted until the required inspections and tests have been made, demonstrating that the signal distribution system conforms to the specified requirements, and that the required equipment, systems, and documentation have been provided.

3.5.1 Unshielded Twisted Pair Tests

All metallic cable pairs shall be tested for proper identification and continuity. All opens, shorts, crosses, grounds, and reversals shall be corrected. Correct color coding and termination of each pair shall be verified in the communications closet and at the outlet. Horizontal wiring shall be tested from and including the termination device in the communications closet to and including the modular jack in each room. Backbone wiring shall be tested end-to-end, including termination devices, from terminal block to terminal block, in the respective communications closets. These test shall be completed and all errors corrected before any other tests are started.

3.5.2 Category 5 Circuits

All category 5 circuits shall be tested using a test set that meets the Class II accuracy requirements of EIA TSB 67 (Draft) standard. Testing shall use the Basic Link Test procedure of EIA TSB 67. Cables which contain failed circuits shall be replaced and retested to verify the standard is met.

3.5.3 Coaxial Cable

Cable shall be tested for continuity, shorts and opens. Characteristic impedance shall be verified over the range of intended operation. Cable length shall be verified. Cable shall be sweep tested for attenuation over the range of intended operation.

END OF SECTION

SECTION 16768

FIBER OPTIC DATA TRANSMISSION SYSTEM

PART 1 GENERAL

1.1 REFERENCES

The publications listed below form a part of this specification to the extent referenced. The publications are referred to in the text by basic designation only.

AMERICAN NATIONAL STANDARDS INSTITUTE (ANSI)

ANSI C2	(1997) National Electrical Safety Code

CODE OF FEDERAL REGULATIONS (CFR)

47 CFR 15	Radio Frequency Devices

ELECTRONIC INDUSTRIES ASSOCIATION (EIA)

EIA 310-D	(1992) Cabinets, Racks, Panels, and Associated Equipment
EIA 455-13	(1984; R 1990) FOTP-13 Visual and Mechanical Inspection of Fibers Cables, Connectors and/or Other Fiber Optic Devices
EIA 455-25A	(1989) FOTP-25 Repeated Impact Testing of Fiber Optic Cables and Cable Assemblies
EIA 455-30B	(1991) FOTP-30 Frequency Domain Measurement of Multimode Optical Fiber Information Transmission Capacity
EIA 455-41	(1985) FOTP-41 Compressive Loading Resistance of Fiber Optic Cables
EIA 455-46A	(1990) FOTP-46 Spectral Attenuation Measurement for Long-Length, Graded-Index Optical Fibers
EIA 455-58A	(1990) FOTP-58 Core Diameter Measurement of Graded-Index Optical Fibers

EIA 455-59	(1989) FOTP-59 Measurement of Fiber Point Defects Using an OTDR
EIA 455-61	(1989) FOTP-61 Measurement of Fiber or Cable Attenuation Using an OTDR
EIA 455-65	(1988) FOTP-65 Optical Fiber Flexure Test
EIA 455-81A	(1991) FOTP-81 Compound Flow (Drip) Test for Filled Fiber Optic Cable
EIA 455-82B	(1992) FOTP-82 Fluid Penetration Test for Fluid-Blocked Fiber Optic Cable
EIA 455-88	(1987) FOTP-88 Fiber Optic Cable Bend Test
EIA 455-91	(1986; R 1991) FOTP-91 Fiber Optic Cable Twist-Bend Test
EIA 455-104A	(1993) FOTP-104 Fiber Optic Cable Cyclic Flexing Test
EIA 455-171	(1987) FOTP-171 Attenuation by Substitution Measurement - for Short-Length Multimode Graded-Index and Single-Mode Optical Fiber Cable Assemblies
EIA 455-177A	(1992) FOTP-177 Numerical Aperture Measurement of Graded-Index Optical Fibers
EIA 606	(1993) Administration Standard for the Telecommunications Infrastructure of Commercial Buildings

NATIONAL ELECTRICAL MANUFACTURERS ASSOCIATION (NEMA)

NEMA 250	(1991) Enclosures for Electrical Equipment (1000 volts Maximum)

NATIONAL FIRE PROTECTION ASSOCIATION (NFPA)

NFPA 70	(1996) National Electrical Code

UNDERWRITERS LABORATORIES (UL)

UL 910	(1995; Rev May 1995) Test for Flame-Propagation and Smoke-Density Values for Electrical and Optical-Fiber Cables Used in Spaces Transporting Environmental Air
UL 1666	(1991) Test for Flame Propagation Height of Electrical and Optical-Fiber Cables Installed Vertically in Shafts

1.2 SYSTEM DESCRIPTION

1.2.1 General

A fiber optics (FO) data transmission system (DTS) shall be provided. The data transmission system shall consist of fiber optic cable, splices and connectors. The data transmission system shall interconnect system components as shown. Computing devices, as defined in 47 CFR 15, shall be certified to comply with the requirements for Class B computing devices and labeled as set forth in 47 CFR 15.

1.2.2 Environmental Requirements

Equipment and cable to be utilized indoors shall be rated for continuous operation under ambient environmental conditions of 0 to 50 degrees C dry bulb and 10 to 95 percent relative humidity, noncondensing. Equipment shall be rated for continuous operation under the ambient environmental temperature, pressure, humidity, and vibration conditions specified or normally encountered for the installed location. Fiber optic cable for outdoor installation shall be rated for minus 40 to plus 60 degrees C.

1.3 SUBMITTALS

Government approval is required for submittals with a "GA" designation; submittals having an "FIO" designation are for information only. The following shall be submitted in accordance with Section 01330 SUBMITTAL PROCEDURES:

SD-01 Data

Fiber Optic System; GA.

Equipment calculations for flux budgets and gain margins.

SD-06 Instructions

Manufacturers' Recommendations; GA.

Where installation procedures, or any part thereof, are required to be in accordance with the recommendations of the manufacturer of the material being installed, printed copies of these recommendations shall be submitted prior to installation. Installation of the item will not be allowed to proceed until the recommendations are received and approved.

SD-08 Statements

Test Plans; FIO.

Test plans shall define tests required to ensure that the system meets technical, operational, and performance specifications. The test plans shall define milestones for the tests, equipment, personnel, facilities, and supplies required. The test plans shall identify the capabilities and functions to be tested.

SD-09 Reports

Test Reports; FIO.

Test reports, in booklet form showing field tests performed to adjust each component and field tests performed to prove compliance with the specified performance criteria, upon completion and testing of the installed system.

SD-13 Certificates, FIO

Manufacturer's certificate indicating compliance with transmission and reliability requirements. Where equipment or materials are specified to conform to the standards or publications and requirements of CFR, ANSI, NFPA, EIA, or UL, certificates attesting that the items furnished under this section of the specification conform to the specified requirements.

PART 2 PRODUCTS

2.1 MATERIALS AND EQUIPMENT

Materials and equipment shall conform to the respective publications and other requirements specified below.

2.1.1 OPTICAL FIBERS

2.1.1.1 EMCS Fiber Optic Cable shall be factory fabricated, multifiber, duct/aerial conductive central member, breakout type rise cable. Each fiber shall be protected 900 micrometer (um) loose tube, gel filled ~~tight~~ buffer type, individual color coded blue and orange, one fiber per buffer tube, and a flame retardant indoor/outdoor (UV) rated PVC exterior jacket. Fiber optic cable shall be rated for the temperature range of minus 40 degrees F. to plus 122 degrees.

2.1.1.2 Fibers shall be multimode, graded index, solid low loss glass waveguides. Each fiber shall be continuous without factory or field installed splices from one modem to the next modem. Two fiber cable shall have the following operation and construction characteristics.

Number of fibers:	2 each fiber in separate buffer tube
Core diameter:	100 micrometer
Cladding diameter:	140 micrometer
Primary Buffer tube outside diameter:	250 micrometer
Secondary Tight Buffer tube diameter:	900 micrometer
Maximum attenuation:	4.0 dB/km at 850 micrometer
Minimum bandwidth:	100 MHz/km
Numerical operature:	0.29
Maximum installation load:	1200 N (270 lbs.)
Maximum operational load:	500 N
Minimum bending radius:	
During installation:	14 cm (5.6 in)
During operation:	7 cm (2.8 in)

Operating temperature range: -40 to –70 deg. C

Fiber shall meet EIA 455-46A, EIA 455-65, EIA 455-177A, EIA 455-30B and EIA 455-58A.

2.1.1.3 FO Splices: Field splices are not allowed. Terminations/connectors shall only be allowed within each building that is connected to the EMCS and shall be contained in the RTU enclosure. Fiber optic connectors shall be used, as specified in paragraph below.

2.1.1.4 LAN fiber optic cable shall be provided as indicated.

2.1.2 CABLE CONSTRUCTION

2.1.2.1 General

The cable shall contain a minimum of two fiber optic conductors for each full duplex circuit. The number of fibers in each cable shall be as shown. Each fiber shall be protected by a protective tube. Cables shall have a strength member and an exterior jacket. Cable and fiber protective covering shall be free from holes, splits, blisters, and other imperfections. The covering shall be flame retardant, moisture resistant, non-nutrient to fungus, ultraviolet light resistant as specified and nontoxic. Mechanical stress present in cable shall not be transmitted to the optical fibers. Strength members shall be non-metallic and shall be an integral part of the cable construction. The combined strength of all the strength members shall be sufficient to support the stress of installation and to protect the cable in service. The exterior cables shall have a minimum storage temperature range of minus 40 to plus 70 degrees C. Interior cables shall have a minimum storage temperature of minus 10 to plus 75 degrees C. All cables furnished shall meet the requirement of NFPA 70. Fire resistant characteristics of cables shall conform to Article 770, Sections 49, 50, and 51. A flooding compound shall be applied into the interior of the fiber tubes, into the interstitial spaces between the tubes, to the core covering, and between the core covering and jacket of all cable. Flooded cables shall comply with EIA 455-81A and EIA 455-82B. Cables shall be from the same manufacturer, of the same cable type, and of the same size. Each fiber and protective coverings shall be continuous with no factory splices. Fiber optic cable assemblies, including jacketing and fibers, shall be certified by the manufacturer to have a minimum life of 30 years. FO cable shall be certified to meet the following: EIA 455-13, EIA 455-25A, EIA 455-41, EIA 455-47B, EIA 455-59, EIA 455-61, EIA 455-88, EIA 455-91, EIA 455-104A, and EIA 455-171.

2.1.2.2 Duct Cable

The optical fibers shall be surrounded by a tube buffer, shall be contained in a channel or otherwise loosely packaged to provide clearance between the fibers and inside of the container, and shall be extruded from a material having a coefficient of friction sufficiently low to allow the fiber free movement. Each pair shall be color coded orange and blue.

a. The cable outer jacket shall be medium density polyethylene material containing at least 2.6 percent carbon black with only black pigment added for additional coloring.

b. Tensile strength: Cables shall withstand an installation tensile load of not less than 1300 Newtons and not less than 300 Newtons continuous tensile load.

c. Impact and Crush resistance: The cables shall withstand an impact of 3 Newton-meters as a minimum, and shall have a crush resistance of 220 Newtons per square centimeter as a minimum.

d. Minimum Bending Radius: Minimum bending radius shall not be less than 150 mm during installation or less than 100 mm during operation

2.1.3 FO CONNECTORS

FO connectors shall be stainless steel Type II FSMA 906 fiber optic cable connector, capable of terminating multimode glass fiber, with outside cladding diameter of 140 microns and black shell sleeve sized to fit over 250 micron buffer tube. Connectors shall have quick connect features and a typical insertion loss of 1.5 dB.

2.1.4 CONDUIT, FITTINGS AND ENCLOSURES

Conduit shall be as specified in Section 16415 ELECTRICAL WORK, INTERIOR, and Section 16375 ELECTRICAL DISTRIBUTION SYSTEM, UNDERGROUND, and as shown.

PART 3 INSTALLATION

3.1 INSTALLATION

System components and appurtenances shall be installed in accordance with the manufacturer's instructions and as shown.

3.1.1 Interior Work

Conduits, tubing and cable trays for interior FO cable interior shall be installed as specified in Section 16415 ELECTRICAL WORK, INTERIOR and as shown. Cable installation and applications shall meet the requirements of NFPA 70, Article 770, Sections 52 and 53. Cables not installed in conduits or wireways shall be properly secured and neat in appearance, and if installed in plenums or other spaces used for environmental air, shall comply with NFPA 70 requirements for this type of installation.

3.1.2 Exterior Underground Cable

Except as otherwise specified, conduits, ducts, and manholes for underground FO cable systems shall be installed as specified in Section 16375 ELECTRICAL DISTRIBUTION SYSTEM, UNDERGROUND and as shown.

For cables installed in ducts and conduit, a cable lubricant compatible with the cable sheathing material shall be used on all cables pulled. Pulling fixtures shall be attached to the cable strength members. If indirect attachments are used, the grip diameter and length shall be matched to the cable diameter and characteristics. If an indirect attachment is used on cables having only central strength members, the pulling forces shall be reduced to ensure that the fibers are not damaged from forces being transmitted to the strength member. During pulling the cable pull line tension shall be continuously monitored using dynamometers or load-cell instruments, and shall not exceed the maximum tension specified by the cable manufacturer. The mechanical stress placed upon the cable during installation shall be such that the cable is not twisted or stretched. A cable feeder guide shall be used between the cable reel and the face of the duct or conduit to protect the cable and guide it into the duct or conduit as it is unspooled from the reel. As the cable is unspooled from the reel, it shall be inspected for jacket defects or damage. The cable shall be kinked or crushed and the minimum bend radius of the cable shall not be exceeded during installation. Cable shall be hand fed and guided through each manhole and additional lubricant shall be applied at all intermediate manholes. When practicable, the center pulling technique shall be used to lower pulling tension. That is, the cable shall be pulled from the center point of the cable run towards the end termination points. The method may require the cable to be pulled in successive pulls. If the cable is pulled out of a junction box or manhole the cable shall be protected from dirt and moisture by laying the cable on a ground covering.

3.1.3 Service Loops

Each fiber optic cable shall have service loops of not less than 3 meters (9.8 feet) in length at each end. The service loops shall be housed in a service loop enclosure.

3.1.4 Metallic Sheath Grounding

Fiber optic cable with metallic sheath routed in the trench with a power cable shall have the metallic sheath grounded at the cable termination points.

3.1.5 Splices

No splices will be permitted unless the length of cable being installed exceeds the maximum standard cable length available from a manufacturer or unless fiber optic pigtails are used to connect transmitters, receivers, or other system components for terminations to the fiber. Splices shall be made using the method recommended by the cable manufacturer. Splices shall be housed in a splice enclosure and shall be encapsulated with an epoxy, ultraviolet light cured splice encapsulant or otherwise protected against infiltration of moisture or contaminants. FO splices shall be field tested at the time of splicing. Fusion splices shall have less than 0.2 dB loss. Mechanical splices shall have less than 0.5 dB loss. There shall be no more than 1 splice per kilometer (0.62 mile) in any of the FO cables excluding terminations. Field splices shall be located in cable boxes. Sufficient cable shall be provided in each splicing location to properly rack and splice the cables, and to provide extra cable for additional splices. Cable ends shall be protected with end caps except during actual splicing. During the splicing operations, means shall be provided to protect the unspliced portions of the cable and its fibers from the intrusion of moisture and other foreign matter.

3.1.6 Connectors

Connectors shall be as specified in paragraph FO CONNECTORS. Fibers at each end of the cable shall have jumpers or pigtails installed of not less than 1 meter (3 feet) in length. Fibers at both ends of the cable shall have connectors installed on the jumpers. The mated pair loss, without rotational optimization, shall not exceed ~~-~~0.75 ~~1.5~~ dB. The pull strength between the connector and the attached fiber shall not be less than 22.7 kilograms.

3.1.7 Identification and Labeling

Identification tags or labels shall be provided for each cable. Markers, tags and labels shall use indelible ink or etching which will not fade in sunlight, or in buried or underground applications. Markers, tags, and labels shall not become brittle or deteriorate for a period of 20 years. Label all termination blocks and panels with cable number or pair identifier for cables in accordance with EIA 606 and as specified. The labeling format shall be identified and a complete record shall be provided to the Government with the final documentation. Each cable shall be identified with type of signal being carried and termination points.

3.2 TESTING

3.2.1 General

The Contractor shall provide personnel, equipment, instrumentation, and supplies necessary to perform testing.

3.2.2 Contractor's Field Test

The Contractor shall verify the complete continuity of the fiber optic cable including connectors.

3.2.3 Optical Time Domain Reflectometer Tests

Optical time domain reflectometer tests shall be performed using the FO test procedures of EIA 455-59 and EIA 455-61. An optical time domain reflectometer test shall be performed on all fibers of the FO cable on the reel prior to installation. The optical time domain reflectometer shall be calibrated to show anomalies of 0.2 dB as a minimum. Photographs of the traces shall be furnished to the Government. An optical time domain reflectometer test shall be performed on all fibers of the FO cable after it is installed. The optical time domain reflectometer shall be calibrated to show anomalies of 0.2 dB as a minimum. If the optical time domain reflectometer test results show anomalies greater than 1 dB, the FO cable segment is unacceptable to the Government. The unsatisfactory segments of cable shall be replaced with a new segment of cable. The new segment of cable shall then be tested to demonstrate acceptability. Photographs of the traces shall be furnished to the Government for each link.

END OF SECTION

INDEX OF DRAWINGS

PLATE NUMBER	TITLE	REVISION
	FY 00 144 Person Dormitory Malmstrom AFB, Montana PN NZAS 9390101C	
GT1.1	Exploration Logs	
GT1.2	Exploration Logs	
GT1.3	Locations of Explorations	
C1.1	Conceptual Site Plan	~~A~~
C1.2	Dumpster Enclosure Details	A
A1.1	First Floor Plan	A
A1.2	Second/Third Floor Plans	
A1.3	Exterior Elevations/Building Section	A
A1.4	Residential Module Plan	
A1.5	Details	A
E1.1	Electrical Site Plan	A

NOTE: Drawings are provided under separate folder "Plans".

Modification to Drawings

Plates A1.1 through A1.5:
a. Delete all scales on each plate and replace with "NOT TO SCALE".
b. Add a Note: "Drawing is not to scale. The designer is responsible for fully functional design of the facility in compliance with all applicable codes."

Plate A1.3:
Add Note 2: "Roof slopes are diagrammatic. Use roof slope 36.4% to match roof slope of the adjacent dormitory (Bldg. No. 655)."

APPENDIX C • GEOTECHNICAL REPORT

This page intentionally blank

FY 00 DORMITORY
MALMSTROM AIR FORCE BASE, MONTANA

PROJECT NO. PDC NZAS 93-90101C

FINAL
GEOTECHNICAL REPORT

17 DECEMBER 1999

PREPARED BY

CIVIL/SOILS SECTION, DESIGN BRANCH

SEATTLE DISTRICT, U.S. ARMY CORPS OF ENGINEERS

CENWS-EC-DB-CS 17 December 1999

FY 00 Dormitory
Malmstrom Air Force Base, Montana
PN PDC NZAS 93-90101C

1. General. This project consists of constructing a new 144-person three story dormitory. Other project features include paved parking and access road, utility connections, and landscaping.

2. Foundation Exploration. Foundation exploration was conducted on 18-19 November 1999 by the Seattle District Corps of Engineers. Fifteen exploration test holes (99-PA-30 through 99-BH-48, holes numbered 37, 38, 39, and 40 were completed due to site interference) were drilled and/or dug to depths ranging from 1.8 meters to 9.2 meters using a Mobile, Model B-61 truck-mounted power auger and a Case, Model 580L backhoe. Exploration logs and locations are shown on Plates GT1.1 through GT1.3. Split-spoon samples were taken at about 1.5 meter intervals in the power auger exploration test holes. Standard penetration tests (SPT) were conducted at 1.5 meter intervals. Laboratory testing on selected soil samples was conducted to determine moisture content, gradations, and Atterberg limits (see attached laboratory test results).

3. Site Conditions.

a. Regional Geology. The site lies near the western edge of the glaciated Missouri Plateau section of the northern Great Plains physiographic province. The upland surface is at elevations of 1036 meters to 1067 meters and approximately 90 meters above the adjacent Missouri River Valley. The Great Plains gently rise to the west with subdued knob and kettle topography as evidence of the stagnating Pleistocene glaciers that once occupied the region. In the vicinity of the site, the ground surface is mantled with eolian fine sand and Pleistocene glacial till, generally an unsorted and unstratified mixture of compact clay, silt and sand containing few gravels, cobbles, and boulders. The site lies on the crest of the Southern Arch segment of the Sweetgrass Arch, a major regional geologic structure. Bedrock in subcrop or outcrop in this portion of the arch consists of massive sandstone with interbedded clay shales and siltstone of the Cretaceous Kootenai Formation.

b. Foundation Conditions. In general, soils at the project site are glacial deposits which frequently contain a high montmorillinite, moisture sensitive, clay content. Such soils are expansive and cause foundation related problems. Therefore, special design considerations are needed. Bedrock in the area is generally at a depth greater than 30 meters. The regional groundwater table is at a depth of about 60 meters below the ground surface, however, there are local areas of perched groudwater, some of which occur within a few meters of the ground surface. Based on previous test data of soils in the general area of the base, the soils are highly corrosive and contain a high percentage of salts (up to 16,500 parts per million).

Based on the exploration conducted, the soils generally consist of surficial silty sands (SM) or clayer sands (SC) varying in depths up to about 4 meters below the surface. The surficial sands overlie stiff to hard clays (CL) with varying amounts of sand and gravel to depth, see the exploration logs for specific information. Perched groundwater was encountered in two exploration test holes, 99-BH-45 and 99-BH-48, at depths of 1.8 metes and 1.95 meters, respectively.

c. Existing Structures. During demolition of Buildings Nos. 624, 625, 626, and 627, the foundation footings with stem walls were apparently left in place. Limited exploration was conducted on the westerly end of these sites to determine the extent of these features. The footings are approximately 150 mm thick by 300 mm wide with a 150 mm thick stem wall attached. The depths to the top of the footings varying from about 500 mm to 740 mm below the exisiting ground surface. The Contractor shall verify these structures and shall be responsible for removal within the contruction limits of this project.

c. Earthquake History. Reference: Draft TI 809-04/AFMAN 32-1149 V1 (I), "Seismic Design for Buildings", dated May 1998. For all structures located within those regions of the Maximum Consided Earthquake (MCE) maps having values of short period spectral accelerations ,S_s, greater than 0.15 g or values of the one second period spectral acceleration, S_1, greater than 0.04 g, the site shall be classified according to TI 809-04, Table 3-1, Site Classification. From the MCE maps, the values of S_s and S_1 are 0.25g and 0.08g, respectively for Malmstrom Air Force base. Criteria to determine the site classification from Table 3-1 include type of soils, depths of soil layers, average SPT "N" values for the top 30 meters (100 feet) of materials, average shear wave velocities for the top 30 meters (100 feet) of materials, and the average undrained shear strength for the top 30 meters (100 feet) soils. The deepest explorations that we have conducted at this base is about 12 meters. Although we do not have soils data that extends to depths of 30 meters, in general the previous explorations at the base indicate that the soils seem to be relatively uniform with depth. Based on the previous assumption, laboratory and field test data at this site and others on the base, and generic soil parameters for the site soils; the average SPT "N" values at the site are about 20-25 and the average undrained shear strength is about 100 kPa (2000 psf). From Table 3-1, for the type of soils, the average SPT "N" values and the average undrained shear strength, a site classifcation of D is obtained for this site.

d. Environmental History. Geotechnical exploration disclosed no visual or olfactory evidence of hazardous or toxic materials. Therefore, chemical analysis to determine the presence or absence of such materials was not performed. If any suspected hazardous material is found during the performance of this job, all work will stop and the Corps of Engineers inspector and the Base Environmental Office will be notified immediately.

4. Recommended Design and Drainage Considerations and Construction Techniques for Expansive Soils.

a. General. Certain precautions must be taken during design and construction to minimize expansive soil problems and insure against excessive movements.

b. General Design Considerations.

(1) Foundation systems shall be selected and designed to minimize differential movement of the various parts of the structure that could cause damages.

(2) Except as otherwise specifically approved, slabs-on-grade shall not bear directly on footings or pedestals and shall not be tied to footings or pedestals. Suspended structural floor slabs shall be fully supported on top of the footings. Floating slabs on grade shall be isolated from the walls with a flexible impervious compound. Slabs on grade should be expected to crack; however, cracking can be controlled by the addition of reinforcing steel and spacing of contraction joints.

(3) Sewerlines and other utility connections through slabs or footings shall be flexible and permitted to slip freely. Roof drains and other piping shall not pass under footings. All piping including roof drains shall pass through the footing walls and shall be sleeved with a minimum clearance of 25 mm between the piping and the sleeve. This will require local deepening of the footing in order to meet frost depth requirements.

(4) At the time of compaction, native clay backfill shall have moisture contents ranging from 1 percent below to 4 percent above the optimum moisture content. This requirement is necessary to prevent changes in moisture content after construction, leading to foundation movement.

(5) Backfill against low exterior footing walls or grade beams may consist of native materials; however, significant retaining walls, basement walls, and interior grade beams shall be backfilled with nonswelling, low permeable, materials meeting the following gradation: 100 percent by weight passing the 75 mm sieve; 20 to 50 percent by weight passing the 4.75 mm sieve; and 8 to 15 percent by weight passing the 75 μm sieve.

(6) Moisture barriers shall be installed in crawl spaces and around the perimeters of structures to promote uniform and constant soil moisture beneath foundations. Moisture barriers around the perimeter of the structure shall be sealed to the foundation wall a minimum of 200 mm and extend not less than 3 meters beyond the foundation wall for normal depth footings and for deeper foundations, ie. basements, extend beyond the foundation excavation limits or a minimum of 3 meters whichever is greater. The moisture barrier shall be attached to the vertical wall surfaces with continuous pressure treated wood nailers secured by expansion anchors into the wall. The barriers shall be sloped to drain away from the structure. Moisture barriers, where used, shall be durable and impervious and shall be protected by at least a 300 mm layer of satisfactory backfill material. High density polyethylene sheeting having a thickness of at least 0.508 mm is recommended for moisture barriers.

(7) Utility trench backfill shall consist of native clays and contain no pervious materials, except High Temperature Hot Water (HTHW) lines shall be backfilled with granular bedding material up to within 300 mm from the surface. From observations by Base personnel, grass will not grow over buried HTHW pipes where native clays have been used as backfill. The granular bedding material will dissipate the heat from the pipes more effectively than the native clays. The top 300 mm of backfill over HTHW lines shall be native clay.

(8) A 300 mm thick layer of nonswelling, low permeable material is recommended under floating floor slabs. A high density polyethylene moisture barrier having a minimum thickness of 0.508 mm shall be placed directly under the low permeable layer separating the low permeable layer from the underlying swelling soils. The moisture barrier shall be attached to the vertical wall surfaces with continuous pressure treated wood nailers secured by expansion anchors into the wall. A vapor barrier having a minimum thickness of 0.15 mm shall be placed directly on the low permeable layer beneath all interior slabs.

(9) Landscape berms may consist of native materials and shall not be more than 1.5 meters high adjacent to the structure.

(10) Structural fills shall consist of nonswelling, low permeable material.

c. General Drainage Considerations.

(1) Grades of at least 1 percent and preferably 5 percent, to promote drainage of water away from the structure, shall be provided around the perimeter of the structure.

(2) Low areas shall be filled with compacted backfill of nonswelling, low permeable, silty sandy gravel materials.

(3) Runoff from roofs shall be directed away from the structure by downspouts and storm drains or surface channels.

(4) Walks and pavements adjacent to the structure shall be positively sloped away from the structure.

(5) Provide no hose bibs on the exterior of the structure.

(6) For a structure with shallow footings (less than 2.1 meters below finished grade) no landscaping that requires irrigation shall be permitted within 4.5 meters of the structure and pressurized hose bibs and sprinkler heads shall be at least 7.5 meters from the structure. For a structure with a basement or comparable deep footings (more than 2.1 meters below finished grade), lawn will be permitted to extend to within 1.2 meters from the exterior walls, however pressurized exterior water lines, hose bibs, and sprinkler heads shall be at least 6 meters from the structure. Trees shall not be permitted within 7.5 meters and shrubs within 6 meters of the structure.

d. Important Elements of Construction Techniques. Construction techniques shall be used that promote a constant moisture regime in the foundation soils during and following construction. The following elements of construction are important in obtaining adequate foundation performance in expansive soils and should be incorporated into the specifications.

(1) Excavations. During excavation and construction operations foundation materials under buildings and structures shall not be disturbed by heavy construction equipment or other traffic that may cause pumping or rutting of the foundation materials below finished grade. The excavation shall be completed as quickly as possible to the design depth to protect the foundation soils from drying or infiltration of additional moisture. If the excavation is to remain open for more than 3 days for foundations or 7 days for paving areas, an impervious moisture barrier shall be applied to the newly exposed surfaces of the excavation to prevent moisture content change of the foundation soils. This may consist of sprayed-on emulsion or cutback asphalt, white pigmented curing compound, or plastic sheeting. Sprayed-on asphalt or curing compound shall be applied at a rate of 0.5 liters per square meter over the entire surface of the subgrade including excavation back slopes, trenches, and foundations of structures. Sides of the excavation shall be constructed on a 1 vertical on 1 horizontal slope or an appropriate angle that will not transmit intolerable swelling pressures from the expansive soil to the foundation. The foundation shall be constructed in the excavation as quickly as practical.

(2) Drainage During Construction. The site shall be prepared to avoid ponding of water in low areas. Consideration shall be given to compaction of 150 mm to 300 mm or more of impervious, nonswelling, silty sandy gravel soil on the site prior to construction of the foundation to promote drainage and trafficability on the site. Sumps and pumps shall be provided at the bottom of excavations if necessary to remove rainwater or subsurface drainage which has entered the excavation. Provision for after normal duty operation of the pumps shall also be made.

5. Foundation Design.

a. Footing Depth. In accordance with TM 5-809-1, dated 28 March 1986, exterior footings shall be placed a minimum of 1270 mm below finished grade for heated structures and 1830 mm below finished grade for unheated structures for frost protection. In addition, where finished grade is raised above the natural ground surface by landscape berms, footings shall be placed a minimum of 1270 mm below the natural ground surface for control of settlement.

b. Soil Properties. Use assumed soil properties of ϕ = 0 degrees, c = 48 kilopascals (kPa), and moist unit weight = 2002 kilograms per cubic meter (kg/m^3) for silty and clayey in situ soils. For nonswelling, low permeable backfill materials the soil properties to be used are ϕ = 32 degrees, c = 0, and moist unit weight = 2082 kg/m^3.

c. Bearing Capacity. Using the above soil properties for silty and clayey in situ soils, computations based on Terzaghi bearing capacity factors, strength testing on other projects, standard penetration tests, and general experience in the area indicate an allowable bearing capacity of approximately 120 kPa for footings extending to design frost-protection depth. We therefore recommend that conventional spread footings be designed for a net allowable bearing capacity of 120 kPa dead load plus live load with one-third overstress allowed for temporary dynamic loads. However shallow foundations placed within the moisture active zone (the upper 5 meters based on the laboratory test data, previous exploration and general area information) will be subject to some seasonal movements due to moisture changes in the expansive clay soils. For structures extremely sensitive to movement, consideration should be given to use of drilled, cast-in-place piers. For structures using footings, overexcavation under footings of 600 mm in both depth and width and replacement with a pad of nonswelling low permeable, silty sandy gravel soil is appropriate.

d. Design for Drilled Pier Foundations. The active zone of seasonal moisture change extends to a depth of about 4 meters from the ground surface based on interpretation of the laboratory test results, previous exploration, potential perched ground water, and general site information on the base. The bottom of drilled piers or shafts must therefore extend below this zone sufficiently to withstand the building loads and to provide adequate resistance to uplift loads when piers are in tension due to expansion of surficial soils from seasonal moisture change. The expansive characteristics of these clays will not be uniform in this upper zone of seasonal moisture change. Belling of pier ends will minimize the necessary depth of penetration below the active zone. In the loaded zone of straight piers or shafts, use an allowable soil adhesion of 48 kPa. This value is based on conservative estimates using laboratory test data and from testing and experience of similiar soils at other projects in the general area. However, based on research for belled piers, soil adhesion in the zone 1.5 meters above the base of the bell should not be used in calculating the bearing capacity of the pier. For end bearing at a depth in excess of 4 meters, an allowable bearing value of 431 kPa is recommended. For uplift bearing on top of the pier bells an allowable value of 335 kPa is recommended. The minimum steel to prevent pier cracking under tension loads is 1.5 percent of the gross shaft area. Steel should extend the full length of piers and be properly tied into any belled ends. Pier tension loads should be computed based on soil adhesion in the active zone of 96 kPa.

We recommend that an SPT be conducted at the bottom each caisson at a depth of 450 mm above the design caisson depth. The minimum SPT “N” value shall be 17, if the number is not achieved then the caisson shall be drilled an additional 1.5 meters and the SPT re-run.

e. Grade Beams. Grade beams should be isolated from the effect of expanding soil by void forms. Void forms should be protected by retainer planks and spacer blocks. Exterior grade beam depth should be at least 1270 mm below finished grade for heated structures and 1830 mm below finished grade for unheated structures for frost protection. The void space under grade beams shall be protected from moisture entry.

f. Frost Uplift (Jacking) Forces on Drilled Piers and Buried Structures. We recommend that the frost uplift force due to the freeze grip of the soil on the structure be eliminated by placing suitable bond breakers between the soil and structure throughout the frost design depth. The use of a bond breaker eliminates the requirement for strengthening the structure to resist frost uplift. Reference: TM 5-886-1, Procedures for Foundation Design of Buildings and Other Structures (Except Hydraulic Structures) Emergency Construction.

g. Earth Pressure Coefficients.

(1) For the nonswelling, low permeable backfill material, theoretical earth pressure coefficients for active (K_a), at rest (K_o), and passive (K_p) conditions are 0.33, 0.50, and 3.0, respectively. These coefficients are valid only for frictionless, vertical walls with horizontal backfill. For walls designed for other conditions, appropriate revisions of these coefficients must be made. Wall movements of at least 0.005H (H = wall height) are required to reduce wall pressures to active condition. Very stiff or internally braced walls for which movements less than 0.005H are anticipated should be designed for K_o condition or appropriate braced cut criteria. For passive conditions, a relatively large movement is required to develop full passive earth pressure. For this reason, $K_p = 2.0$ is recommended for general design use. For static conditions, all walls should have a safety factor of at least 2.0.

(2) Where the local silty and clayey soils are used as backfill against low footing walls, a lateral earth pressure coefficient, K, of 1.0 is recommended for all cases because of the expansive nature of these soils.

h. Floor Slab. The design of heavy loads on floor slabs shall be performed according to TM 5-809-12. Use a modulus of subgrade reaction, "K" of 40.7 kPa/mm and use concrete with flexural strength of 4.1 megapascals (MPa) at 28 days age.

6. Underground Utilities.

a. Frost Protection. To prevent frost damage, the top of frost susceptible utility lines shall be placed a minimum of 1830 mm below the finished ground line.

b. In general, soils in this area have moderate to severe corrosion activity. In-situ resistivity readings were obtained at the site. Field resistivity was conducted using the Werner 4-probe system. The field reading are as follows:

HOLE LOCATION	DEPTH(mm)	RESISTIVITY (ohm-cm)
99-PA-30	600	2300
	1200	800
	1800	5800
	2400	4600

HOLE LOCATION	3000 DEPTH(mm)	9600 RESISTIVITY (ohm-cm)
99-PA-32	600	5800
	1200	1200
	1800	1300
	2400	1000
	3000	1000
99-PA-34	600	2600
	1200	2300
	1800	1100
	2400	800
	3000	6100

c. Granular Bedding for utility pipes shall consist of material meeting the following gradation requirements: 100 percent by weight passing the 25 mm sieve; 40 percent to 80 percent by weight passing the 4.75 mm sieve; and 8 percent to 20 percent by weight passing the 75 μm sieve, or as recommended by the utility pipe manufacturer.

d. Select granular material for utility pipes. Where unstable material is encountered in the bottom of the trench, such material shall be removed and replaced with select granular material. Select granular material shall be nonswelling and conform to the following gradation:

U.S. Standard	Percent Passing Sieve Size
75 mm	100
4.75 mm	20-40
75 μm	0-10

e. Design of Heat Distribution System. The regional ground water table is at a depth of about 60 meters, however, perched ground water is locally found within a few meters of the ground surface. Based on the potential perched ground water, the clayey soils, and criteria found in Guide Specification, CEGS 15705, we recommend that the heat distribution system lines be designed for site classification A and corrosive soil conditions.

7. Sulfate Resistant Cement. Severe concentrations of water-soluble sulfates have been found in the subgrade soils based on previous experience and observations. This concentration of sulfates can result in sulfate attack deterioration of concrete. Type V (sulfate resisting) cement or Type II cement with a maximum of 5 percent C_3A content shall be used in all concrete exposed to the subgrade clays or perched ground water tables.

8. Recommended Pavement Design.

a. General.

(1) All pavements for the dormitory shall be asphaltic concrete (AC) with the exception of Portland cement concrete dumpster pads. The sidewalks shall be Portland cement concrete (PCC).

(2) All the pavements except sidewalks shall be designed for frost protection. In order to assure that the frost design is adequate for conventional loading, two methods of pavement design were performed and evaluated; these are the conventional design method and the reduced subgrade strength method.

Note: The pavement design technical manual (TM 5-822-5) is not in a metric format, therefore non-metric units will be used to determine the required pavement thicknesses. The recommended pavement thickness will then be converted into metric units.

b. Asphaltic Concrete Pavement for Access Roads and Parking Areas. The assumptions and procedures for each method are as follows:

(1) Conventional Design Method (Nonfrost Design).

(a) Category III

(b) Class E road

(c) Subgrade - CBR 5

(d) Base - CBR 80

From TM 5-822-5 (Table 3-1, Pavement Design Index), a design index of 3 is obtained for a Category III traffic and Class E road. From Figure 8-1, for a subgrade CBR of 5 and design index of 3, the total pavement section thickness required is 14.5 inches. Pavement section would, therefore, consist of 2 inches of AC pavement, 4 inches of base course and 8.5 inches of subbase course.

(2) Reduced Subgrade Strength Method (Frost Design).

(a) Category III

(b) Class E road

(c) Subgrade (frost melting periods) - CBR 3.0 (based on previous test results at Malmstrom Air Force Base and the recommendations by user)

(d) Subbase - CBR 40 (nonfrost susceptible (NFS))

(e) Base - CBR 80 (NFS)

From TM 5-822-5 (Table 3-1, Pavement Design Index), a design index of 3 is obtained for a Category III traffic and Class E road. From Figure 8-1, for a subgrade frost area soil support index of 3 and design index of 3, the total pavement section thickness required is 20 inches. Pavement section would, therefore, consist of 2 inches of AC pavement, 4 inches of NFS base course, and 14 inches of NFS subbase. The minimum AC thickness shall be 2 inches.

Malmstrom Base personnel has recommended that because of climatic stress, a minimum of 3 inches of AC has shown to perform better than the 2 inch minimum as obtained from the design manuals and this has apparently been utilized on the base for some projects and is apparently contained in the Malmstrom Design Guide. Therefore, per the recommendation(Design Guide)/request from Malmstrom Base personnel, the recommended AC pavement section shall consist of 75 mm of AC, 100 mm of NFS base course, and 330 mm of NFS subbase course.

c. PCC pavement for Dumpster Pads. The assumptions, procedures, and design for each method are as follows:

(1) Conventional Design Method (Nonfrost Design)

(a) Category IV traffic

(b) Class E pavement

(c) K, modulus of subgrade reaction of 150 pounds per square inch per inch (p.s.i./in.)

(d) Subbase - CBR 40

(e) Base - CBR 80

(f) fs, flexural strength of concrete, 600 p.s.i. at 28 days age.

From TM 5-822-5 (Table 3-1, Pavement Design Index), a design index of 4 is obtained for a Category IV traffic and Class E road. From Figure 9-1. for a base course thickness of 4 inches, the effective k at the top of the base coure is 175 p.s.i/inch. From Figure 12-2 (Design Curve for Plain Concrete Parking and Open Storage Areas), for a flexural strength of 600, an effective k of 175, and a design index of 4, the required PCC thickness is 5.8 inches. The total pavement section would consist of 6 inches of PCC placed on 4 inches of base course.

(2) Reduced Subgrade Strength Method (Frost Design)

(a) Category IV traffic

(b) Class E pavement

(c) Subgrade Frost Area Index of Reaction of 40 p.s.i./in. for an F-3 soil (Figure 4-2, TM 5-818-2) for 8 inches of base courses)

(d) Subbase - CBR 40 (nonfrost susceptible (NFS))

(e) Base - CBR 80 (NFS)

(f) fs, flexural strength of concrete, 600 p.s.i. at 28 days age.

From TM 5-822-5 (Table 3-1, Pavement Design Index), a design index of 4 is obtained for a Category IV traffic and Class E road. From Figure 12-2, for a flexural strength of 600, an subgrade frost area index of reaction of 40, and a design index of 4, the required PCC thickness is 6.5 inches. Therefore, the total pavement section would consist of 6.5 inches of PCC, 4 inches of NFS base course, and 4 inches of NFS subbase course. This pavement section is recommended. The recommended PCC pavement section shall consist of 165 mm of PCC, 100 mm of NFS base course, and 100 mm of NFS subbase course.

d. Recommended Pavement Sections. The reduced subgrade strength pavement section is recommended for use in all areas. The conventional pavement section was not selected because it does not have the adequate thickness to sufficiently control or reduce the frost action. The limited subgrade frost penetration method which is directed specifically to the control of pavement distortion caused by frost heave was also not used. It requires a significant thickness of base and subbase to limit the penetration of frost into the frost-susceptible subgrade. Prevention of frost penetration into the subgrade is nearly always uneconomical and unnecessary and will not be used to design pavements to serve motor vehicle traffic.

The reduced subgrade strength method used for pavement design does not seek to limit the penetration of frost into the subgrade, but determines the thickness of pavement, base, and subbase that will adequately carry traffic loads over the design period of years which includes one or more periods during which the subgrade supporting capacity is sharply reduced by frost melting.

e. The base course shall be compacted to at least 100 percent of the maximum modified Proctor density. The subbase shall be compacted to at least 95 percent of the maximum modified Proctor density and the appropriate gradation in the guide specification shall be selected for the given CBR requirements. Base course and subbase course materials shall be NFS having not more than 5 percent passing the 75 μm sieve and not more than 3 percent finer than 0.02 mm size. The top 150 mm of the subgrade shall be compacted to at least 90 percent of the maximum modified Proctor density for cohesive soils and 95 percent of the maximum modified Proctor density for cohesionless soils.

f. Portland Cement Concrete (PCC) Sidewalk. This pavement is designed in accordance with paragraph 12-6, TM 5-822-5. The pavement section shall be 100 mm of PCC and 100 mm of base course. Base course for sidewalks shall consist of well-graded crushed gravel or stone conforming to the following gradation: 100 percent by weight passing the 38 mm sieve; 40 percent to 80 percent by weight passing the 4.75 mm sieve; and 8 percent to 20 percent by weight passing the 75 μm sieve. The top 150 mm of subgrade shall be compacted to at least 85 percent of the maximum modified Proctor density. Compressive strength shall be 24.1 MPa at 28 days age.

9. Preparation of Plans and Specifications. The technical manuals referenced below shall also be reviewed for information relative to preparation of plans and specifications.

a. References.

(1) TM 5-742, Concrete and Masonry, June 1970.

(2) TM 5-805-1, Standard Practice for Concrete for Military Structures.

(3) TM 5-809-1/AFM 88-3, Chap. 1, Load Assumptions for Buildings, 28 March 1986.

(4) TM 5-809-2/AFM 88-3, Chapter 2, Concrete and Structural Design for Buildings, August 1975.

(5) TM 5-809-3/AFM 88-3, Masonry Structural Design for Buildings, August 1982.

(6) TI 809-04/AFMAN 32-1149 V1 (I), Seismic Design for Buildings, May 1998.

(7) TM 5-809-12/AFM 88-3, Chapter 15, Concrete Floor Slabs on Grade Subjected to Heavy Loads, April 1977.

(8) TM 5-813-1/AFM 88-10, Chapter 5, Water Distribution Systems, August 1965.

(9) TM 5-814-1/AFM 88-11, Chapter 1, Sanitary and Industrial Waste Sewers, August 1966.

(10) TM 5-818-1, Procedures for Foundation Design of Buildings and Other Structures (Except Hydraulic Structures), October 1965.

(11) TM 5-818-2, Pavement Design for Frost Conditions, January 1985.

(12) TM 5-818-7, Foundations in Expansive Soils, September 1983.

(13) TM 5-822-2/AFM 88-7, Chapter 5, General Provisions and Geometric Design for Roads, Streets, Walks, and Open Storage Areas, April 1977.

(14) TM 5-822-5/AFM 88-7, Chapter 1, Pavement Design for Roads, Streets, Walks, and Open Storage Areas, June 1992.

(15) TM 5-822-7/AFM 88-6, Chapter 8, Standard Practice for Concrete Pavements, August 1987.

(16) TM 5-822-8, Bituminous Pavements - Standard Practice, December 1971.

ENGINEERING & GEOSCIENCE, INC.
1505 14th ST. SW. • P.O. Box 3269, Great Falls, MT 59403-3269 • (406) 453-5400

REPORT TO: US Army Corps of Engineers
Attn: CENPS-GT-GE, Ernie Sabo
P.O. Box 3755
Seattle, WA 98124-3755

DATE: December 15, 1999
JOB NUMBER: 99-149
SHEET 1 of 5
INVOICE NO.: 11230

REPORT OF: Moisture Contents, Plasticity Index, Hydrometer Analysis

PROJECT: FY 00 Dormitory
Malmstrom AFB
Great Falls, Montana

TEST DESCRIPTION

On November 19, 1999, we received split spoon samples from the referenced project. Our instruction were to perform moisture content, plasticity index and hydrometer analysis in general accordance of Corps of Engineers Methods. The laboratory tests are summarized below and on the attached report.

Lab No.	53258	53259	53260
Client I. D.:	30A	30B	30C
Moisture Content, %	20	21	20
Liquid Limit, %			
Plasticity Index, %			

Lab No.	53261	53262	53263
Client I. D.:	30D	30E	30F
Moisture Content, %	18	20	19
Liquid Limit, %	42		46
Plasticity Index, %	26		28

Lab No.	53264	53265	53266
Client I. D.:	31A	31B	31C
Moisture Content, %	18	24	20
Liquid Limit, %			35
Plasticity Index, %			20

Lab No.	53267	53268	53269
Client I. D.:	31D	31E	31F
Moisture Content, %	19	18	19
Liquid Limit, %		44	
Plasticity Index, %		28	

Lab No.	53270	53271	53272
Client I. D.:	32A	32B	32C
Moisture Content, %	13	21	20
Liquid Limit, %		40	
Plasticity Index, %		24	

Lab No.	53273	53274	53275
Client I. D.:	32D	32E	32F
Moisture Content, %	20	19	19
Liquid Limit, %	47		
Plasticity Index, %	30		

Lab No.	53276	53277	53278
Client I. D.:	33A	33B	33C
Moisture Content, %	28	19	19
Liquid Limit, %			45
Plasticity Index, %			28

Lab No.	53279	53280	53281
Client I. D.:	33D	33E	33F
Moisture Content, %	19	18	20
Liquid Limit, %			47
Plasticity Index, %			31

Lab No.	53282	53283	53284
Client I. D.:	34A	34B	34C
Moisture Content, %	19	20	20
Liquid Limit, %		46	
Plasticity Index, %		30	

Lab No.	53285	53286	53287
Client I. D.:	34D	34E	34F
Moisture Content, %	20	20	19
Liquid Limit, %			47
Plasticity Index, %			29

Lab No.	53288	53289	53290
Client I. D.:	35A	35B	35C
Moisture Content, %	16	19	17
Liquid Limit, %			
Plasticity Index, %			

Lab No.	53291	53292	53293
Client I. D.:	35D	35E	35F
Moisture Content, %	19	19	19
Liquid Limit, %	46		46
Plasticity Index, %	28		28

Lab No.	53294	53295	53296
Client I. D.:	36A	36B	36C
Moisture Content, %	15	20	21
Liquid Limit, %			30
Plasticity Index, %			15

Lab No.	53297	53298	53299
Client I. D.:	36D	36E	36F
Moisture Content, %	19	17	17
Liquid Limit, %		34	
Plasticity Index, %		20	

SUMMARY OF HYDROMETER TEST RESULTS

Lab No.:	53267	53277
Client I.D.:	31D	33B
Screen or Sieve Size	Percent Passing Screen, Sieve Size or Particle Diameter Shown	
1/2"	100	100
3/8"	100	99
No. 4	99	99
No. 10	98	98
No. 20	96	98
No. 40	94	96
No. 80	88	83
No. 100	87	78
No. 200	79.4	61.7

HYDROMETER ANALYSIS

Time (min)	Particle Diameter (mm)		Particle Diameter (mm)	
1	0.041	69.8	0.044	49.6
3	0.024	63.4	0.027	39.5
4	0.021	61.6	0.023	38.6
10	0.014	56.1	0.015	35.0
19	0.010	54.3	0.011	34.1
60	0.006	47.0	0.006	28.6
480	0.002	35.3	0.002	22.5
1440	0.001	30.8	0.001	20.7
Specific Gravity		2.67		2.71

SUMMARY OF HYDROMETER TEST RESULTS

Lab No.:	53289	53294
Client I.D.:	35B	36A
Screen or Sieve Size	Percent Passing Screen, Sieve Size or Particle Diameter Shown	
1/2"	100	100
3/8"	100	100
No. 4	100	100
No. 10	99	99
No. 20	98	98
No. 40	96	97
No. 80	90	91
No. 100	89	89
No. 200	80.8	80.4

HYDROMETER ANALYSIS

Time (min)	Particle Diameter (mm)		Particle Diameter (mm)	
1	0.097	72.2	0.041	71.8
3	0.024	64.4	0.025	63.4
4	0.021	63.6	0.021	61.6
10	0.013	59.2	0.014	57.0
19	0.010	55.8	0.010	53.2
60	0.006	48.2	0.006	47.0
480	0.002	36.9	0.002	35.9
1440	0.001	27.5	0.001	27.6
Specific Gravity		2.68		2.68

REVIEWED BY

All reports of test results are submitted as confidential property of our client. Any reproduction of partial reports requires our expressed approval. Samples are disposed of after testing is completed unless other prior arrangements are made. Test results relate only to the materials actually sampled and tested.

END OF REPORT